7-6-79
Vol. 44—No. 131
BOOK 1:
PAGES
39371-39738
BOOK 2:
PAGES
39739-40050

federal register

Book 1 of 2 Books
Friday, July 6, 1979

Highlights

39620 **Emergency School Aid** HEW/OE extends the closing date for applications on its expected $2,000,000 in grants until 8-9-79

40004 **School Lunch and Breakfast Programs** USDA/FNS proposes to establish minimum nutritional standards for foods sold in competition; comments by 9-6-79 (Part VI of this issue)

39619 **Educational Research and Development** HEW/NIE changes closing date for receipt of proposals to 12-31-79 and 6-30-80

39404 **Elementary and Secondary Education** HEW/OE issues interpretative rule on amount of funds to be refunded for noncompliance with "comparability" requirement

39555 **Bus Industry** ICC proposes to allow, within a fixed zone, fare flexibility; comments by 7-26-79

39558 **Interstate Commerce** ICC proposes to examine only a sample of tariffs to determine compliance with regulatory requirements; comments by 8-20-79

39384 **Space Transportation System** NASA provides special physical security measures, safety precautions and operational standards for mission-critical positions; effective 7-6-79

CONTINUED INSIDE

Highlights

FEDERAL REGISTER Published daily, Monday through Friday, (not published on Saturdays, Sundays, or on official holidays), by the Office of the Federal Register, National Archives and Records Service, General Services Administration, Washington, D.C. 20408, under the Federal Register Act (49 Stat. 500, as amended; 44 U.S.C. Ch. 15) and the regulations of the Administrative Committee of the Federal Register (1 CFR Ch. I). Distribution is made only by the Superintendent of Documents, U.S. Government Printing Office, Washington, D.C. 20402.

The Federal Register provides a uniform system for making available to the public regulations and legal notices issued by Federal agencies. These include Presidential proclamations and Executive Orders and Federal agency documents having general applicability and legal effect, documents required to be published by Act of Congress and other Federal agency documents of public interest. Documents are on file for public inspection in the Office of the Federal Register the day before they are published, unless earlier filing is requested by the issuing agency.

The Federal Register will be furnished by mail to subscribers, free of postage, for $5.00 per month or $50 per year, payable in advance. The charge for individual copies of 75 cents for each issue, or 75 cents for each group of pages as actually bound. Remit check or money order, made payable to the Superintendent of Documents, U.S. Government Printing Office, Washington, D.C. 20402.

There are no restrictions on the republication of material appearing in the Federal Register.

Area Code 202-523-5240

39513 **Common Carrier Communications Facilities** FCC solicits inquiries on regulatory and policy problems with respect to computer technology; comments by 8-30-79

39469 **Antibiotics for Human Use** HEW/FDA proposes to exempt from batch certification all products for dermatologic and vaginal use; comments by 9-4-79

39617 **Medical Devices** HEW/FDA announces premarket approval of a certain contact lens; petitions for administrative review by 8-6-79

40016 **Prescription Drug Products** HEW/FDA proposes patient labeling requirements; comments by 10-4-79 (Part VII of this issue)

39509 **Civil Rights** NFAH proposes guidelines to ensure nondiscrimination against handicapped persons; comments by 8-15-79

39742 **Domestic Mail Manual** PS revises Chapter 1 of the Postal Service Manual in order to set forth domestic services offered to the public; effective 7-30-79 (3 documents) (Part II of this issue)

40044 **Grants Program** DOE/ERA establishes rulemaking to assist the representation of consumer interest; effective 7-6-79 (Part VIII of this issue)

39392 **Reporting Formats** GSA alters its rule for federally owned and leased buildings to enhance compliance requirements for physically handicapped; effective 7-6-79

39393 **Credit Return Program** GSA adopts rule which will ensure losses be kept at a minimum; effective 1-1-79

39477 **Income Tax** Treasury/IRS proposes rules relating to earned income credit; comments by 9-4-79

39476 **Income Tax** Treasury/IRS proposes regulations relating to the capital loss carryovers for regulated investment companies; comments by 9-4-79

39722 **Sunshine Act Meetings**

Separate Parts of This Issue

39742 **Part II, PS**
39858 **Part III, IRLG**
39882 **Part IV, Labor/ESA**
39938 **Part V, CPSC**
40004 **Part VI, USDA/FNS**
40016 **Part VII, HEW/FDA**
40044 **Part VIII, DOE/ERA**

Contents

Federal Register
Vol. 44, No. 131
Friday, July 6, 1979

Agency for International Development
NOTICES
Authority delegations:
39678 Near East Region, Mission directors; contracting functions

Agricultural Marketing Service
RULES
39371 Lemons grown in Ariz. and Calif.
PROPOSED RULES
39413 Grapefruit grown in Calif.

Agricultural Stabilization and Conservation Service
NOTICES
39566 Wheat, barley, and oats program, 1980; determination; inquiry; shortening of comment period

Agriculture Department
See also Agricultural Marketing Service; Agricultural Stabilization and Conservation Service; Animal and Plant Health Inspection Service; Farmers Home Administration; Food and Nutrition Service; Food Safety and Quality Service; Rural Electrification Administration.
PROPOSED RULES
Administrative regulations:
39409 Agricultural cooperative associations; cease and desist proceedings under Section 2 of the Capper-Volstead Act.

Air Quality National Commission
NOTICES
39636 Study plan, draft; availability

Alcohol, Tobacco and Firearms Bureau
RULES
Alcoholic beverages:
39389 Tax-free alcohol; marks on portable containers

Animal and Plant Health Inspection Service
RULES
Livestock and poultry quarantine:
39374 Exotic Newcastle disease

Army Department
See Engineers Corps.

Arts and Humanities, National Foundation
PROPOSED RULES
Nondiscrimination:
39509 Handicapped in federally-assisted programs
NOTICES
Meetings:
39647 Humanities Panel
39647 Visual Arts Advisory Panel

Civil Aeronautics Board
RULES
Procedural regulations:
39384 Board proceedings; conduct rules; finalization of interim rule
NOTICES
Hearings, etc.:
39567 Wright Air Lines, Inc., et al.
39722 Meetings; Sunshine Act

Commerce Department
See Foreign-Trade Zones Board; Industry and Trade Administration; Maritime Administration; National Oceanic and Atmospheric Administration.

Consumer Product Safety Commission
RULES
39993 Cellulose insulation; labeling requirement
39938, 39983 Cellulose insulation; labeling requirement; amendment to interim safety standard (2 documents)
NOTICES
39858 Carcinogens, scientific report, identification and estimation of risks; inquiry

Customs Service
NOTICES
Countervailing duty petitions and preliminary determinations:
39692 Tapered roller bearings and components from Japan

Defense Civil Preparedness Agency
RULES
39390 Identification for Federal employees, reservists, and nonfederal support personnel; deletion of CFR part
NOTICES
39576 Civil Defense Identity Card SF 138

Defense Department
See also Defense Civil Preparedness Agency; Engineers Corps.
NOTICES
Meetings:
39576, 39577 Science Board task forces (2 documents)

Drug Enforcement Administration
NOTICES
Schedules of controlled substances; production quotas:
39626 Schedules I and II, 1980 aggregate; inquiry

Economic Regulatory Administration
RULES
Energy conservation:
40044 Grants for offices of consumer services
NOTICES
Powerplant and industrial fuel use; existing powerplant or installation; classification requests:
39578 Niagara Mohawk Power Corp.
Consent orders:
39577 Clark & Clark

39580 Moncrief, W. A., Jr.
Crude oil, domestic; allocation program:
39579 Refiners buy/sell list; April through September; supplemental

Education Office
RULES
39404 Educationally deprived, neglected and delinquent children, special educational needs; financial assistance to local educational agencies; interpretative ruling
NOTICES
Grant applications and proposals, closing dates:
39620 State Educational Agencies for fiscal year 1979; extension of closing date

Employment Standards Administration
NOTICES
39882 Minimum wages for Federal and federally assisted construction; general wage determination decisions, modifications, and supersedeas decisions (Ala., D.C., Ga., Ill., Ind., Ky., Mich., Minn., N.Y., N.C., Ohio, Pa., S.C., Tex. and Wis.)

Energy Department
See also Economic Regulatory Administration; Federal Energy Regulatory Commission.
RULES
Oil; administrative procedures and sanctions:
39375 Interpretations
PROPOSED RULES
39467 Emergency building temperature restrictions; revised allocation of Federal funds to meet State enforcement costs
NOTICES
Meetings:
39606 High Energy Physics Advisory Panel

Engineers Corps
NOTICES
Environmental statements; availability, etc.:
39576 Washington State; aquatic plant Eurasian watermilfoil control
39574 Baltimore Harbor and channels, Md. and Va.
39574 Lava flow control project, Hilo, Hawaii
39575 Roseau River flood control project, Minn.

Environmental Protection Agency
RULES
Air programs; fuel and fuel additives:
39390 Assessment of civil penalties
Water pollution; effluent guidelines for certain point source categories:
39391 Coal mining; catastrophic precipitation exemption; temporary suspension
PROPOSED RULES
Air quality implementation plans; approval and promulgation; various States, etc.:
39480 Arizona
39485 Oregon
39484 Wisconsin
Air quality control regions, criteria, and control techniques:
39486 Attainment status designations
Water quality standards; State programs:
39486 Ohio
NOTICES
Air pollution control; new motor vehicles and engines:
39609 1981 light-duty vehicles (diesel) NO_x emission standards
39858 Carcinogens, scientific report, identification and estimation of risks; inquiry
Meetings:
39608, 39609 Science Advisory Board (2 documents)
Pesticides; emergency exemption applications:
39608 Atrazine
39607 Permethrin and fenvalerate
39606 Terramycin
Pesticides, experimental use permit applications:
39608 N-tetradecyl formate, etc.; correction

Farmers Home Administration
PROPOSED RULES
Loan and grant making:
39432 Construction planning and performing; development work; clarification of regulations

Federal Communications Commission
PROPOSED RULES
Common carrier services:
39513 Second computer inquiry
Radio broadcasting:
39550 AM channel spacing; reduction
Radio services, special:
39555 Land mobile radio systems, conventional; co-channel mileage separation and frequency loading standards; extension of time
NOTICES
39610 AM broadcast applications ready and available for processing
39722 Meetings; Sunshine Act
39611 Radio Conference for AM Broadcasting; meeting to develop U.S. position

Federal Deposit Insurance Corporation
RULES
39381 Bank securities; offering circular requirements for public issuance; policy statement
PROPOSED RULES
39469 Offering circular requirements for public issuance; disclosure standards withdrawal
NOTICES
39722 Meetings; Sunshine Act (2 documents)

Federal Election Commission
NOTICES
39722 Meetings; Sunshine Act

Federal Emergency Management Agency
RULES
Flood elevation determinations:
39394 Kentucky
39394 Louisiana
39295 Maine (2 documents)
39396 Massachusetts
39397 Michigan (2 documents)
39397, 39398 Minnesota (3 documents)
39399 Missouri
39399, 39400 Nebraska (3 documents)

39401–39403 New Jersey (5 documents)
PROPOSED RULES
Flood elevation determinations:
39508 Ohio; correction

Federal Energy Regulatory Commission
NOTICES
Environmental statements; availability, etc.:
39606 Power Authority of State of New York
Hearings, etc.:
39581 Citizens Utilities Co.
39604 Panhandle Eastern Pipe Line Co. et al.
39605 United Gas Pipe Line Co.
Natural Gas Policy Act of 1979:
39583, 39593 Jurisdictional agency determinations (2 documents)

Federal Maritime Commission
NOTICES
Complaints filed:
39616 Fiat-Allis France Materials de Travaux Publics S.A. v. Atlantic Container Line
39723 Meetings; Sunshine Act

Federal Mine Safety and Health Review Commission
NOTICES
39723 Meetings; Sunshine Act

Federal Reserve System
NOTICES
39723 Meetings; Sunshine Act

Federal Trade Commission
NOTICES
39723 Meetings; Sunshine Act (3 documents)

Fine Arts Commission
NOTICES
39574 Meetings

Fish and Wildlife Service
RULES
Hunting:
39406 Medicine Lake National Wildlife Refuge

Food and Drug Administration
RULES
Animal drugs, feeds, and related products:
39388 Diethylstilbestrol (DES); revocation of test methods
39387 Diethylstilbestrol (DES); revocation
PROPOSED RULES
Human drugs:
39469 Antibotic drug products, dermatologic and vaginal; batch certification exemption
40016 Prescription drug patient labeling requirements
NOTICES
Animal drugs, feeds, and related products:
39618 Diethylstilbestrol (DES); approval withdrawn
39858 Carcinogens, scientific report, identification and estimation of risks; inquiry
Color additives:
39618 Nitrates in bacon; letter of denial; availability
Human drugs:
39619 Benylin
Medical devices:
39617 RX-56 (Porofocan A) contact lens; premarket approval
Meetings:
39617 Consumer participation; information exchange

Food and Nutrition Service
PROPOSED RULES
Child nutrition programs:
39413 Child care food program; proposed revision; correction
40004 School lunch and breakfast programs: nutritional standards

Food Safety and Quality Service
NOTICES
39858 Carcinogens, scientific report, identification and estimation of risks; inquiry

Foreign Trade Zones Board
NOTICES
Applications, etc.:
39571 Rogers County, Okla.

General Services Administration
RULES
Property management:
39392 Physically handicapped accommodations for federally owned and leased buildings; reporting formats
39393 Stock items; credit returns program
NOTICES
Authority delegations:
39616, 39617 Defense Department Secretary (2 documents)

Geological Survey
NOTICES
Environmental statements; availability, etc.:
39625 Coal resources development, Utah

Health, Education, and Welfare Department
See Education Office; Food and Drug Administration; National Institute of Education.

Industry and Trade Administration
NOTICES
Organization and functions:
39571 International Economic Policy and Research Bureau

Interior Department
See Fish and Wildlife Service; Geological Survey; Land Management Bureau; Reclamation Bureau.

Internal Revenue Service
PROPOSED RULES
Income and employment taxes:
39477 Earned income credit
Income taxes:
39476 Investment companies; capital loss carryovers

Interstate Commerce Commission
RULES
Railroad car service orders; various companies:
39405 Chicago & North Western Transportation Co.
39405 Consolidated Rail Corp.

39406 Illinois Terminal Railroad Co.
39406 Kansas City Southern Railway Co.
39407 Massachusetts Central Railroad Corp.
39407 West Virginia Railroad Maintenance Authority
PROPOSED RULES
Motor carriers:
39555 Bus industry; fare flexibility
Practice rules:
39560 Subsidies; rail service continuation; Consolidated Rail Corp.; compensation
39558 Tariff Integrity Board
NOTICES
Motor carriers:
39699-39708 Permanent authority applications (3 documents)
39679 Transfer proceedings

Justice Department
See Drug Enforcement Administration; Prisons Bureau.

Labor Department
See also Employment Standards Administration; Pension and Welfare Benefit Programs Office.
NOTICES
Adjustment assistance:
39629 Allied Chemical Corp. et al.
39630 Ansewn Shoe Corp. et al.
39630 Baker Marine Corp. et al.
39631 B.B.M., Inc. et al.
39632 Bis Mark
39632 Conair Corp.
39632 Gant Shirt Inc. et al.
39632 Hull Dye & Print Works, Inc.
39632 Joseph J. Piertrafeaa Co., Inc.
39633 Maryland-Hampstead Clothing Co. et al.
39633 Modern Slack Creations, Inc.
39634 Muench-Kreuzer Candle Corp.
39634 Northampton Pants Co., Inc.
39634 Rolim Coal Co.
39635 Ronaele Coal Co.
39635 Triple "C" Construction Co., Inc.
39635 U.S. Steel Corp.
39636 Vulcan Corp.
39636 Wallace-Murray Corp.

Land Management Bureau
NOTICES
Applications, etc.:
39622 New Mexico (3 documents)
39623, 39624 Wyoming (3 documents)
Coal leases:
39620 Colorado
Management framework plans; review and supplement:
39623 Utah
Survey plat filings:
39621 Idaho
Wilderness areas; characteristics, inventories, etc.:
39622 New Mexico

Maritime Administration
NOTICES
Trustees; applicants disapproved:
39572 National Bank of North America

National Aeronautics and Space Administration
RULES
Space transportation system:
39384 Mission-critical positions; physical security measures, safety precautions and operational standards

National Credit Union Administration
RULES
Federal Credit Unions:
39383 Manuals; regulatory status
Federal Credit Unions; organization and operations:
39382 Share accounts; interpretive ruling

National Institute of Education
NOTICES
Grant programs, application closing dates:
39619 Unsolicited proposals to conduct educational research and development; change in closing date

National Oceanic and Atmospheric Administration
PROPOSED RULES
Fishery conservation and management:
39564 Foreign fishing; recording of salmon and halibut
NOTICES
Coastal zone management programs; environmental statements; hearings, etc.:
39573 California
Meetings:
39572 Gulf of Mexico and South Atlantic Fishery Management Councils
39572 Pacific Fishery Management Council (2 documents)

National Science Foundation
NOTICES
39648 Advisory committee reports; availability
Meetings:
39648 Ocean Sciences Advisory Committee; change

Nuclear Regulatory Commission
NOTICES
Applications, etc.:
39648 Iowa Electric Light & Power Co.
39649 Public Service Electric & Gas Co.
39649, 39650 Virginia Electric & Power Co. (2 documents)
Environmental statements; availability, etc.:
39648 Susquehanna Steam Electric Station, Units 1 & 2
39724 Meetings; Sunshine Act (2 documents)
Regulatory authority; relinquishment to States:
39650 Rhode Island; availability of staff assessment
Rulemaking petitions:
39649 Public Interest Research Group, et al.; correction

Occupational Safety and Health Review Commission
NOTICES
39724 Meetings; Sunshine Act

Personnel Management Office
RULES
39371 Labor-Management relations program; transfer of functions to Federal Labor Relations Authority

NOTICES
39659 Privacy Act; systems of records

Pension and Welfare Benefit Programs Office
NOTICES
Employee benefit plans:
39627 Prohibition on transactions; exemption proceedings, applications, hearings

Postal Service
RULES
39741, 39852, 39855 Domestic Mail Manual; establishment (3 documents)

Prisons Bureau
NOTICES
Meetings:
39626 Corrections Advisory Council

Railroad Retirement Board
NOTICES
Meetings:
39678 Actuarial Advisory Committee

Reclamation Bureau
NOTICES
Contract negotiations:
39624 Goshen Hole Farm, agricultural water supply; Oreg.
39625 Truckee-Carson Irrigation District (TCID), Nevada; water storage in Stampede Reservoir

Rural Electrification Administration
RULES
39372 CATV loans and loan guarantees under the Consolidated Farm and Rural Development Act
39372 Consolidated Farm and Rural Development Act; loans and loan guarantees; interim
NOTICES
Environmental statements; availability, etc.:
39566 Sunflower Electric Cooperative, Inc.

Securities and Exchange Commission
RULES
39386 Investment managers, institutional; information filed; confidential treatment requests
NOTICES
39724 Meetings; Sunshine Act
Self-regulatory organizations; proposed rule changes:
39673, 39675 Municipal Securities Rulemaking Board (2 documents)
Hearings, etc.:
39661 Aguirre Co.
39661 American General Reserve Fund, Inc.
39663 American Systems, Inc.
39663 Ashland Oil Canada Limited
39663 Capital Fund of America, Inc.
39664 Central and South West Fuels, Inc. et al.
39665 Cross Co.
39666 Cutler-Hammer, Inc.
39666 Dreyfus Leverage Fund, Inc.
39667 Louis Sherry, Inc.
39667 Merrill Lynch, Pierce, Fenner & Smith Inc. et al.
39671 Portland Transit Co.
39671 Resource Management Corp.
39672 Ross Aviation, Inc.
39671 Whitman & Ransum Retirement Savings Plan
39677 Zemarc, Ltd.

Small Business Administration
NOTICES
39678 Optional peg rate
Applications, etc.:
39678 Atalanta Investment Co., Inc.
39678 Market Acceptance Corp.

State Department
See also Agency for International Development.
PROPOSED RULES
39473 Appellate Review, Nationality Procedures, Passports Board; miscellaneous amendments

Tennessee Valley Authority
NOTICES
39679 National Environmental Policy Act; implementation
39686 Service practice standards; inquiry

Three Mile Island Accident, President's Commission
NOTICES
39660 Meetings

Treasury Department
See also Alcohol, Tobacco and Firearms Bureau; Customs Service; Internal Revenue Service.
NOTICES
Antidumping:
39698 Ice cream sandwich wafers from Canada
39692 National Environmental Policy Act; implementation

Veterans Administration
NOTICES
Meetings:
39698 Merit Review Board

Women, President's Advisory Committee
NOTICES
39660 Meetings; correction

MEETINGS ANNOUNCED IN THIS ISSUE

COMMERCE DEPARTMENT
National Oceanic and Atmospheric Administration—
39572 Gulf of Mexico and South Atlantic Fishery Management Council's Coral Advisory Subpanel, 7-30-79
39572 Pacific Fishery Management Council's Billfish Subpanel, 7-20-79
39572 Pacific Fishery Management Council's Scientific and Statistical Committee, 8-8 through 8-10-79
39572 Scientific and Statistical Committee, 7-31-79

COMMISSION ON FINE ARTS
39574 Projects Affecting Appearance of Washington, 7-24-79

DEFENSE DEPARTMENT
Office of the Secretary—
39576 Defense Science Board Task Force on ECM, 8-17-79
39577 Defense Science Board Task Force on Strategic Planning Experiment in the Maritime Balance Area, 7-25-79

ENERGY DEPARTMENT
Office of Energy Research—
39606 High Energy Physics Advisory Panel, 7-31-79

ENVIRONMENTAL PROTECTION AGENCY
39608 Science Advisory Board Environmental Measurements Advisory Committee, 7-30 and 7-31-79
39609 Science Advisory Board Toxic Substances Subcommittee, 7-24 and 7-25-79

HEALTH, EDUCATION, AND WELFARE DEPARTMENT
Food and Drug Administration—
39617 Health Care Services, 7-21-79

JUSTICE DEPARTMENT
Bureau of Prisons—
39626 Advisory Corrections Council, 8-2 and 8-3-79

NATIONAL FOUNDATION ON THE ARTS AND THE HUMANITIES
39647 Humanities Panel Advisory Committee, 7-23-79
39647 Visual Arts Panel, 7-23-79

NATIONAL SCIENCE FOUNDATION
39648 Ocean Sciences Research Subcommittee, 7-23 through 7-25-79

PRESIDENT'S COMMISSION ON THE ACCIDENT AT THREE MILE ISLAND
39660 Meeting, 7-18, 7-19 and 7-20-79

RAILROAD RETIREMENT BOARD
39678 Actuarial Advisory Committee, 7-25-79

VETERANS ADMINISTRATION
37698 Merit Review Board for Rehabilitative Engineering Research and Development, 8-16 and 8-17-79

CFR PARTS AFFECTED IN THIS ISSUE

A cumulative list of the parts affected this month can be found in the Reader Aids section at the end of this issue.

5 CFR
711 39371

7 CFR
910 39371
1700 39372
1701 39372

Proposed Rules:
Ch. IX 39413
1 39409
210 40004
220 40004
226 39413
1804 39432
1924 39432

9 CFR
82 39374

10 CFR
205 39375
460 40044

Proposed Rules:
490 39467

12 CFR
340 39381
701 (2 documents) 39382, 39383

Proposed Rules:
340 39469

14 CFR
300 39384
1214 39384

16 CFR
1209 (2 documents) 39938, 39983
1404 39993

17 CFR
249 39386

21 CFR
522 39387
556 39388
558 39387

Proposed Rules:
203 40016
433 39469

22 CFR

Proposed Rules:
7 39473
50 39473
51 39473

26 CFR

Proposed Rules:
1 (2 documents) 39476, 39477
31 39477

27 CFR
201 39389

32 CFR
1810 39390

39 CFR
111 (2 documents) 39741, 39852
242 39855
243 39855
247 39855
248 39855
257 39855
258 39855

40 CFR
80 39390
434 39391

Proposed Rules:
52 (3 documents) 39480–39485
81 39486
120 39486

41 CFR
101–19 39392
101–27 39393

44 CFR
67 (19 documents) 39394–39403

Proposed Rules:
67 39508

45 CFR
116a 39404

Proposed Rules:
1110 39509

47 CFR

Proposed Rules:
64 39513
73 39550
90 39555

49 CFR
1033 (6 documents) 39405–39407

Proposed Rules:
Ch. X 39555
1011 39558
1100 39558
1127 39560

50 CFR
32 39408

Proposed Rules:
611 39564

Rules and Regulations

Federal Register
Vol. 44, No. 131
Friday, July 6, 1979

This section of the FEDERAL REGISTER contains regulatory documents having general applicability and legal effect, most of which are keyed to and codified in the Code of Federal Regulations, which is published under 50 titles pursuant to 44 U.S.C. 1510.
The Code of Federal Regulations is sold by the Superintendent of Documents. Prices of new books are listed in the first FEDERAL REGISTER issue of each month.

OFFICE OF PERSONNEL MANAGEMENT

5 CFR Part 711

Labor-Management Relations

AGENCY: Office of Personnel Management.

ACTION: Final regulations.

SUMMARY: This is a technical change related to the reorganization of the Federal Government's internal labor-management relations program and the transfer of functions to the Federal Labor Relations Authority pursuant to Reorganization Plan #2 of 1978. 5 CFR Part 711, Subpart A—Procedures Under Section 6(e) of Executive Order 11491, § 711.101–103, is revoked, and Part 711—Labor-Management Relations is reserved.

EFFECTIVE DATE: June 29, 1979.

FOR FURTHER INFORMATION CONTACT: David S. Dickinson, Office of Labor-Management Relations, U.S. Office of Personnel Management, 1900 E Street NW., Washington, D.C. 20415, (202) 632-4442.

SUPPLEMENTARY INFORMATION: Pursuant to Section 304(a)(2) of Reorganization Plan No. 2 of 1978, effective January 1, 1979, the functions of the Civil Service Commission under Section 6(e) of Executive Order 11491, as amended, Labor-Management Relations in the Federal Service, were transferred to the Federal Labor Relations Authority. The cited section of the Executive Order provided that a member of the Civil Service Commission designated by the Chairman of the Commission perform certain adjudicatory functions of the Assistant Secretary of Labor for Labor-Management Relations in labor relations cases involving the Department of Labor. Its purpose was to avoid any real or apparent conflict-of-interest in the Assistant Secretary adjudicating cases involving the Department of Labor as a party. This was necessary because the Assistant Secretary was responsible for litigating such cases involving all other Federal agencies under Section 6 of Executive Order 11491.

The Office of Personnel Management is revoking § 711.101–103 because those sections have, in effect, been superseded by the creation of the Federal Labor Relations Authority, as an independent establishment in the Executive Branch, to perform adjudicatory and regulatory functions, pursuant to 5 U.S.C. § 7105 and 7134, under the labor-management relations program enacted in the Civil Service Reform Act of 1978, Pub. L. 95-454. There is no further need or authority for the Civil Service Commission, or its successor agencies, to adjudicate labor-management relations cases involving the Department of Labor or any other agency as a party.

Accordingly, the Office of Personnel is removing 5 CFR Part 711.

PART 711—LABOR-MANAGEMENT RELATIONS [Reserved]

Office of Personnel Management.
Beverly M. Jones,
Issuance System Manager.

[FR Doc. 79-20647 Filed 7-5-79; 8:45 am]
BILLING CODE 6325-01-M

DEPARTMENT OF AGRICULTURE

Agricultural Marketing Service

7 CFR Part 910

[Lemon Regulation 206]

Lemons Grown in California and Arizona; Limitation of Handling

AGENCY: Agricultural Marketing Service, USDA.

ACTION: Final rule.

SUMMARY: This regulation establishes the quantity of fresh California-Arizona lemons that may be shipped to market during the period July 8–14, 1979. Such action is needed to provide for orderly marketing of fresh lemons for this period due to the marketing situation confronting the lemon industry.

EFFECTIVE DATE: July 8, 1979.

FOR FURTHER INFORMATION CONTACT: Malvin E. McGaha, 202-447-5975.

SUPPLEMENTARY INFORMATION: Findings. This regulation is issued under the marketing agreement, as amended, and Order No. 910, as amended (7 CFR Part 910), regulating the handling of lemons grown in California and Arizona. The agreement and order are effective under the Agricultural Marketing Agreement Act of 1937, as amended (7 U.S.C. 601–674). The action is based upon the recommendations and information submitted by the Lemon Administrative Committee, and upon other information. It is hereby found that this action will tend to effectuate the declared policy of the act. This regulation has not been determined significant under the USDA criteria for implementing Executive Order 12044.

The committee met on July 2, 1979, to consider supply and market conditions and other factors affecting the need for regulation and recommended a quantity of lemons deemed advisable to be handled during the specified week. The committee reports the demand for lemons is very active.

It is further found that it is impracticable and contrary to the public interest to give preliminary notice, engage in public rulemaking, and postpone the effective date until 30 days after publication in the Federal Register (5 U.S.C. 553), because of insufficient time between the date when information became available upon which this regulation is based and the effective date necessary to effectuate the declared policy of the act. Interested persons were given an opportunity to submit information and views on the regulation at an open meeting. It is necessary to effectuate the declared purposes of the act to make these regulatory provisions effective as specified, and handlers have been apprised of such provisions and the effective time.

§ 910.506 Lemon Regulation 206.

Order. (a) The quantity of lemons grown in California and Arizona which may be handled during the period July 8, 1979, through July 14, 1979, is established at 300,000 cartons.

(b) As used in this section, "handled" and "carton(s)" mean the same as defined in the marketing order.

(Secs. 1–19, 48 Stat. 31, as amended; 7 U.S.C. 601–674)

Dated: July 3, 1979.

D. S. Kuryloski,

Acing Deputy Director, Fruit and Vegetable Division, Agricultural Marketing Service.

[FR Doc. 79-21077 Filed 7-5-79; 8:45 am]

BILLING CODE 3410-02-M

Rural Electrification Administration

7 CFR Part 1700

Loans and Loan Guarantees Under the Consolidated Farm and Rural Development Act; Procedures

AGENCY: Rural Electrification Administration.

ACTION: Final Rule.

SUMMARY: Notice is hereby given that, pursuant to the Consolidated Farm and Rural Development Act (7 U.S.C. 1921 et seq.), REA hereby amends Chapter XVII, Part 1700 of the Code of Federal Regulations. The Consolidated Farm and Rural development Act (Development Act) provides broad authorities for making insured and guaranteed loans to finance many types of community development programs. Administration of the Development Act with respect to financing for community antenna television services or facilities has been transferred from the Farmers Home Administration to the Rural Electrification Administration (see 44 FR 30313, May 25, 1979). This amendment to Part 1700 provides the procedures for implementing the transfer.

EFFECTIVE DATE: July 6, 1979.

FOR FURTHER INFORMATION CONTACT: John H. Arnesen, Assistant Administrator—Telephone, Rural Electrification Administration, U.S. Department of Agriculture, Washington, D.C. 20250, Telephone No. 202–447–4305.

SUPPLEMENTARY INFORMATION: In his State of the Union Message, President Carter emphasized the need to address the pressing problems of rural America in overcoming the problems of isolation, promoting economic development, meeting basic human needs, and protecting the quality of rural life. On February 14, the President announced initiatives designed to overcome isolation in rural areas through modern communications technology. These initiatives emphasized the need to provide financing to encourage the furnishing of facilities for television as well as other telecommunication services to rural residents.

The transfer of authority will enable applicants to obtain required financing by applying to a single agency even when financing under more than one statute is involved. Provision of telecommunication services not otherwise available on an area coverage basis, without duplication of facilities and at the lowest costs for consumers, will be facilitated as only one agency will be considering applications from all entities interested in providing these services. Both borrowers and the Government will benefit from the economies expected to result from the new procedures.

As this amendment involves rules of agency organization and procedures, it is exempt from provisions of the Administrative Procedures Act (5 U.S.C. 553), and the Department's regulations implementing E.O. 12044 (43 FR 50989, Nov. 1, 1978) with respect to notice of proposed rulemaking, opportunity for public participation and delay in effective date. This amendment will therefore become effective July 6, 1979.

Part 1700 of Title 7, Code of Federal Regulations, is hereby amended as follows:

1. "Authority" is amended to read as follows:

Authority: 7 U.S.C. 901–950 (b), 7 U.S.C. 1921 et seq., and 44 FR 30313, May 25, 1979.

2. The following new section is added after § 1700.3:

§ 1700.3a CATV loans and guarantees under the Consolidated Farm and Rural Development Act.

(a) *General.* Loans and loan guarantees may be made by the Administrator pursuant to the Consolidated Farm and Rural Development Act (7 U.S.C. 1921 et seq.) (Development Act) to finance community antenna television (CATV) services or facilities.

(b) *Loan applications, construction and advance of loan funds.* § 1700.3(b) will be applied with respect to applications for insured loans or loan guarantees under the Development Act for CATV purposes, § 1700.3(c) will be applied with respect to the construction of such facilities, and § 1700.3(d) will be applied to the advance of funds on account of such insured loans or loan guarantees.

(c) *Community facility loans for CATV purposes.* Loans for CATV purposes which qualify as community facility loans may be made and insured by the Administrator under Sec. 306 of the Development Act (7 U.S.C. 1926).

(d) *Business and industrial loans for CATV purposes.* Business and industrial loans and loan guarantees for CATV purposes may be made by the Administrator under Sec. 310B of the Development Act (7 U.S.C. 1932). The loan guarantee will provide for reimbursement to the lender for not more than 90 percent of the principal and interest. Interest rates on loans to be guaranteed will be at a rate agreed upon by the lender and the borrower.

3. Sec. 1700.5 is revised to read:

§ 1700.5 Loan security activities.

In carrying out its programs, and in the interest of loan security, the agency requires of borrowers periodic reports on operations, annual audits, etc., and provides specialized and technical accounting, engineering, and other managerial assistance to borrowers in respect to the construction and operation of their facilities, and to help them establish efficient and economical service in rural areas.

Dated: June 28, 1979.

Robert W. Feragen,

Administrator.

[FR Doc. 79-20934 Filed 7-5-79; 8:45 am]

BILLING CODE 3410-15-M

7 CFR Part 1701

Loans and Loan Guarantees Under the Consolidated Farm and Rural Development Act; Interim Regulations

AGENCY: Rural Electrification Administration.

ACTION: Final Rule—Interim Regulations.

SUMMARY: Provisions of the Consolidated Farm and Rural Development Act (Act) pertaining to community antenna television (CATV) services or facilities have been transferred from the Farmers Home Administration to the Rural Electrification Administration (REA). Modern technology will make possible new telecommunications and related services greatly needed in rural areas. This document issues Interim REA Bulletin 328–1, CATV Financing Under the Consolidated Farm and Rural Development Act. The bulletin will be used by REA in the processing of applications, in the approval of loans and loan guarantees and will provide guidance to applicants with respect to financing under the Act.

DATES: Effective date: June 28, 1979. Comments should be received on or before September 4, 1979.

ADDRESS: Send comments to Assistant Administrator—Telephone, Rural Electrification Administration, U.S. Department of Agriculture, Washington, D.C. 20250.

FOR FURTHER INFORMATION CONTACT: John H. Arnesen, (202) 447-4305.

SUPPLEMENTARY INFORMATION: In the May 25, 1979, Federal Register (44 FR 30313), the Secretary of Agriculture announced the transfer of administration of Consolidated Farm and Rural Development Act provisions pertaining to community antenna television (CATV) services or facilities from the Farmers Home Administration to the Rural Electrification Administration.

The broadband technology utilized for CATV services permits a tremendous volume of two-way communications and other messages to be handled on a single coaxlial or fiber optic cable. In addition to voice, data and video transmission, this will make possible initiation of a number of new telecommunications and related services greatly needed in rural areas. The additional services that can be provided on these facilities include electric load control, direct utility metering, telemedicine services, expanded child and adult educational programming, specific community recreational and social services for the elderly or shut-ins, and a host of other services not now available in most of rural America.

This action involves the transfer of existing authorities between two agencies of the Department of Agriculture, including the transfer of applications in process. Rural America has a pressing need for the services made possible by modern technology and this type of financing. Delays in furnishing applicants and the public with basic information concerning loans and loan guarantees from the new agency would not be in the public interest.

Interim REA Bulletin 328-1, CATV Financing Under the Consolidated Farm and Rural Development Act, is accordingly being issued to provide guidance to applicants with respect to this financing. It will also be used by REA in the processing of applications and in the approval of loans and loan guarantees until Bulletin 328-1 is issued in final form, at which time, Appendix A, Part 1701 will be modified accordingly.

Although Bulletin 328-1 is being issued in interim form, interested parties are invited to submit written comments, suggestions, data or arguments no later than September 4, 1979 to the Assistant Administrator—Telephone, Rural Electrification Administration, U.S. Department of Agriculture, Washington, D.C. 20250, to assist in the development of the final Bulletin. Material thus submitted will be evaluated and acted upon in the same manner as if this document were a proposal. An Impact Analysis Statement will be available from the same office.

INTERIM BULLETIN: The text of the interim bulletin follows:

Interim REA Bulletin 328-1

Subject: CATV Financing Under the Consolidated Farm and Rural Development Act

I. Purpose

This bulletin offers guidance to persons interested in obtaining financing under the Consolidated Farm and Rural Development Act (Development Act) for CATV services or facilities in rural areas.

II. General

A. The Development Act provides broad authorities for approving insured and guaranteed loans to finance many types of community development programs. Administration of the Development Act with respect to financing for Community Antenna Television (CATV) services or facilities was transferred from the Farmers Home Administration to the Rural Electrification Administration on May 25, 1979 (44 FR 30313, May 25, 1979).

B. This transfer of authority permits applicants to obtain the required financing by applying to a single agency even when financing under more than one statute is involved. Provision of telecommunication services not otherwise available, on an area coverage basis, without unnecessary duplication of facilities and at the lowest cost for consumers, will be facilitated as only one agency will be considering applications from all entities interested in providing such services.

III. Community Facility Loans

A. Loans for CATV services or facilities which qualify as community facility loans may be made by the Administrator under Sec. 306 of the Development Act (7 U.S.C. 1926), subject to limitations and qualifications set forth in such Act.

B. Public bodies, qualified Indian tribes, and corporations which (1) are operated on a not-for-profit basis and (2) are unable to finance the proposed project from their own resources or obtain sufficient credit elsewhere at reasonable rates and terms are eligible for such loans. See Secs. 306(a)(i) and 333(a) of Development Act.

C. Applications are subject to state and areawide clearing house reviews pursuant to procedures in part I, Attachment A, of OMB Circular No. A-95 (revised). The standard application forms as furnished by REA and required by OMB Circular No. A-102 must be used for this purpose.

D. The Development Act (Sec. 333(c)) specifies that recipients of community facility loans who are later able to obtain a loan from another source at reasonable rates and terms may be requested to obtain such loan and repay the loan made by REA.

E. Community facility loans will bear interest at the rate of 5 percent per year. They will be subject to such terms and conditions and be secured in such manner as the Administrator shall determine to be necessary.

IV. Business and Industrial Loans and Guarantees

A. Financing for CATV services or facilities may be approved by the Administrator under Sec. 310B of the Development Act (7 U.S.C. 1932) as business and industrial loans or loan guarantees, subject to limitations and qualifications set forth in such Act.

B. Public bodies, qualified Indian tribes, and corporations, both profit and nonprofit, are eligible for such loans or loan guarantees. See Sec. 310B(a) of Development Act.

C. Applications are subject to state and areawide clearing house reviews pursuant to procedures in part I, Attachment A, of OMB Circular No. A-95 (revised). The standard application forms as furnished by REA and required by OMB Circular No. A-102 must be used for this purpose.

D. The interest rate on business and industrial loans made by the Administrator will be based on the cost of Treasury borrowings plus such fees and other charges as may be required by the Administrator. These loans will be subject to such terms and conditions and be secured in such manner as the Administrator shall determine to be necessary.

E. Generally, business and industrial loans will be made only when the applicant is not able to obtain a loan from other sources under a Government guarantee for the same purpose at reasonable rates.

F. The Development Act (Sec. 333(c)) specifies that recipients of business and industrial loans who are later able to obtain a loan from another source at reasonable rates and terms may be requested to obtain such loan and repay the loan made by REA.

G. The interest rate on guaranteed loans will be at a rate agreed upon by the borrower and the lender.

H. The maximum loss covered under the Government guarantee will not exceed 90 percent of the principal and accrued interest unpaid on the loan. REA may charge the lender a guarantee fee which is nonrefundable. Any such fee may be passed on to the borrower.

V. Submission of Applications for Loans or Loan Guarantees

A. Before submitting an application for a loan or a loan guarantee, the applicant should submit a letter to the Assistant Administrator—Telephone, Rural Electrification Administration, U.S. Department of Agriculture, Washington, D.C. 20250, outlining in general terms the plans for the proposed project and enclosing a copy of its Balance Sheet and Operating Statement for the latest completed fiscal year.

B. After receipt of the initial inquiry, the applicant will be notified of any further steps to be taken. Applicants for loans or loan guarantees may receive assistance from REA in the preparation of loan applications and supporting data, including market forecasts, feasibility studies and engineering designs. If an application is acceptable after legal, engineering, economic and financial reviews, loan and security documents will be prepared for consideration by the borrower.

C. These loan documents will set forth specific prerequisites to the advance of loan funds under a loan contract or loan guarantee agreement. These prerequisites may cover such matters as the submission of evidence, in form and substance satisfactory to the Administrator, that the borrower has:

1. secured a specified number of customers and signed applicants to receive initial or improved service as a result of the loan;

2. obtained a commitment or commitments from other companies covering the joint use of facilities as may be necessary for the construction and proper operation of the system;

3. received a franchise and other approvals that may be required by law from public bodies with jurisdiction over the borrower;

4. provided assurances that appropriate rates which make the project economically feasible will be placed into effect subject to any required regulatory body approvals;

5. selected a manager and other employees qualified to operate the proposed system; and

6. provided adequate security for the proposed loan and such equity investment as the Administrator may require.

D. The loan documents may also require the borrower to covenant that in the construction and operation of the system it will, among other things:

1. provide service without discrimination with respect to any person on the ground of race, color, sex or national origin;

2. take out and maintain specified insurance coverage;

3. keep proper books, records and accounts under a uniform system of accounts as prescribed by the regulatory body having jurisdiction over the borrower, or in the absence thereof, as prescribed by REA;

4. submit financial reports audited and certified by certified public accountants;

5. submit proposed changes in rates and charges to REA for clearance before presenting them for approval to any regulatory body;

6. limit dividends and similar payments as specified in the document;

7. make available capacity for leasing to other entities for the provision of such services as electric load control, direct utility metering, telemedicine and recreational and social services for the elderly or shut-ins, and

8. provide a plan, satisfactory to the Administrator, for the provision of at least one public access channel.

VI. Administrative Guidelines for the Review of Applications

A. Because of the large demand for financing under Secs. 306 and 310B of the Development Act, it will be necessary to evaluate applications received to assure priority consideration of those meeting the following guidelines:

1. Service will be provided or improved to the widest practical number of users in low density rural areas, particularly those outside the boundaries of incorporated or unincorporated cities, villages, or boroughs having a population in excess of 1500 inhabitants.

2. Funds will be provided for refinancing only when necessary in order to furnish or improve services and not primarily to reduce the cost of borrowed funds. In any case, the amount provided for refinancing will not exceed 40 percent of total amount of the loan.

3. Funds will be provided for acquisitions only when necessary and incidental to the furnishing or improving of service in rural areas. Funds will not be provided for acquisitions for the primary purpose of transferring ownership.

4. Loan funds will not be used to duplicate services available from existing entities in the same area.

B. The Administrator may, in his discretion and on a case-by-case basis, consider other factors in evaluating applications.

C. REA Bulletin 300-8, Financial Participation by Telephone Borrowers in CATV is rescinded. Insofar as applicable, as determined by the Administrator, other REA bulletins for the telephone program in effect on May 31, 1979, and as from time to time amended or supplemented, will be utilized in the administration of the CATV financing program under the Development Act.

Dated: June 28, 1979.

Robert W. Feragen,

Administrator.

[FR Doc. 79-20935 Filed 7-5-79; 8:45 am]

BILLING CODE 3410-15-M

Animal and Plant Health Inspection Service

9 CFR Part 82

Exotic Newcastle Disease and Psittacosis or Ornithosis in Poultry; Area Quarantined

AGENCY: Animal and Plant Health Inspection Service, USDA.

ACTION: Final rule.

SUMMARY: The purpose of this amendment is to quarantine a portion of Los Angeles County in California because of the existence of exotic Newcastle disease. Exotic Newcastle disease was confirmed in Los Angeles County on June 26, 1979. Therefore, in order to prevent the dissemination of exotic Newcastle disease it is necessary to quarantine a portion of Los Angeles County in California.

EFFECTIVE DATE: June 29, 1979.

FOR FURTHER INFORMATION CONTACT: Dr. M. A. Mixson, USDA, APHIS, VS, Federal Building, Room 748, Hyattsville, Maryland 20782, 301-436-8073. Local information may be obtained from Veterinary Services, Sacramento, California, 916-484-4891.

SUPPLEMENTARY INFORMATION: This amendment quarantines a portion of Los Angeles County in California because of the existence of exotic Newcastle disease in such area. Therefore, the restrictions pertaining to the interstate movement of poultry, mynah, and psittacine birds, and birds of all other species under any form of confinement, and their carcasses and parts thereof, and certain other articles, from quarantined areas, as contained in 9 CFR Part 82, as amended, will apply to the quarantined area.

Accordingly, Part 82, Title 9, Code of Federal Regulations, is hereby amended in the following respect:

In § 82.3, the introductory portion of paragraph (a) is amended by adding thereto the name of the State of California and a new paragraph (a)(1) relating to the State of California is added to read:

§ 82.3 Areas quarantined.

(a) * * *

(1) *California.* The premises of Mr. Robert McClinent, 2691 Magnolia Avenue, Long Beach, Los Angeles County.

* * * * *

(Secs. 4–7, 23 Stat. 32, as amended; secs. 1 and 2, 32 Stat. 791–792, as amended; secs. 1–4, 33 Stat. 1264, 1265, as amended; secs. 3 and 11, 76 Stat. 130, 132 (21 U.S.C. 111–112, 115, 117, 120, 123–126, 134b, 134f); 37 FR 28464, 28477; 38 FR 19141.)

The amendment imposes certain restrictions necessary to prevent the interstate spread of exotic Newcastle disease, and, therefore, must be made effective immediately to accomplish its purpose in the public interest.

Therefore, pursuant to the administrative procedure provisions in 5 U.S.C. 553, it is found upon good cause that notice and other public procedure with respect to this final rule are impracticable and contrary to the public interest and good cause is found for making this final rule effective less than 30 days after publication of this document in the Federal Register.

Further, this final rule has not been designated as "significant," and is being published in accordance with the emergency procedures in Executive Order 12044 and Secretary's Memorandum 1955. It has been determined by J. K. Atwell, Assistant Deputy Administrator, Animal Health Programs, APHIS, VS, USDA, that the emergency nature of this final rule warrants publication without opportunity for public comment or preparation of an impact analysis statement at this time.

This final rule implements the regulations in Part 82. It will be scheduled for review in conjunction with the periodic review of the regulations in that Part required under the provisions of Executive Order 12044 and Secretary's Memorandum 1955.

Done at Washington, D.C., this 29th day of June 1979.

M. T. Goff,

Acting Deputy Administrator, Veterinary Services.

[FR Doc. 79-20945 Filed 7-5-79; 8:45 am]

BILLING CODE 3410-34-M

DEPARTMENT OF ENERGY

10 CFR Part 205

Administrative Procedures and Sanctions; 1979 Interpretations of the General Counsel

AGENCY: Department of Energy.

ACTION: Notice of Interpretations.

SUMMARY: Attached are the interpretations issued by the Office of General Counsel of the Department of Energy under 10 CFR Part 205, Subpart F, during the period May 1, 1979, through May 31, 1979. Also attached is a modification of Interpretation 1979–2, issued to Placid Oil Company on January 31, 1979.

Appendix B identifies those requests for interpretation which have been dismissed during the same period.

FOR FURTHER INFORMATION CONTACT: Diane Stubbs, Office of General Counsel, Department of Energy, 12th & Pennsylvania Avenue, NW., Room 1121, Washington, D.C. 20461, (202) 633–9070.

SUPPLEMENTARY INFORMATION: Interpretations issued pursuant to 10 CFR Part 205, Subpart F, are published in the Federal Register in accordance with the editorial and classification criteria set forth in 42 FR 7923 (February 8, 1977), as modified in 42 FR 46270 (September 15, 1977).

These interpretations depend on their authority on the accuracy of the factual statement used as a basis for the interpretation (10 CFR Part 205.84(a)(2)) and may be rescinded or modified at any time (§ 205.85(d)). Only the persons to whom interpretations are addressed and other persons to whom interpretations are served are entitled to rely on them (§ 205.85(c)). An interpretation is modified by a subsequent amendment to the regulation(s) or ruling(s) interpreted thereby to the extent that the interpretation is inconsistent with the amended regulation(s) or ruling(s) (§ 205.85(e)). The interpretations published below are not subject to appeal.

Also published today is Interpretation 1979–2M which was modified in accordance with 10 CFR 205.85(d) to reflect the fact that Placid Refining Company is an affiliated entity of Placid Oil Company. The modification does not alter the decision reached in Interpretation 1979–2.

Issued in Washington, D.C., June 27, 1979.

Merrill F. Hathaway, Jr.,

Acting Assistant General Counsel for Interpretations and Rulings.

Table I-A.—Interpretations

Number	To	Date	Category	File No.
1979-8	U.S. Oil and Refining Co	May 7	Price and allocation	A-74
1979-2M	Placid Oil Co	May 4	Price	A-256
1979-9	Florida Power & Light Co	May 17	Allocation	A-375
1979-11	Mobil Oil Corp	May 24	Price	A-410

Interpretation 1979–8

To: U.S. Oil & Refining Company

Regulations Interpreted: §§ 211.65, 212.94(b)(2)

Code: GCW—AI, PI—Crude Oil Buy/Sell Program

Facts

The U.S. Oil & Refining Company (U.S. Oil) has filed a request for interpretation to resolve an issue that arises under the Mandatory Petroleum Allocation and Price Regulations. 10 CFR Parts 211 and 212. U.S. Oil qualified as a refiner-buyer [1] and participated in the domestic crude oil allocation program (the "buy-sell" program) prior to the amendment of the program on October 1, 1977. 10 CFR 211.65. The buy/sell program was implemented by the Federal Energy Administration (FEA), a predecessor agency of the Department of Energy (DOE), in January 1974. It provided for sales and purchases of crude oil among refiners so that each refiner, regardless of size or affiliation, would have access to available supplies of crude oil at the national average supply-to-capacity ratio for all refiners. Prior to October 1, 1977, the buy/sell program permitted a refiner-buyer to purchase during each allocation quarter a quantity of crude oil

[1] Prior to the amendments effective October 1, 1977, a "refiner-buyer" was defined in 10 CFR 211.62 as "any small refiner or independent refiner." 42 FR 42770 (Aug. 24, 1977).

equal to one-quarter of its crude oil runs to stills in the year 1972, less the volume of crude oil runs to stills for the period February through April 1974, with certain volume adjustments. Refiners classified as refiner-sellers (the 15 largest major integrated oil companies) were required to offer crude oil for sale to those refiners classified as refiner-buyers. The sales obligations of each refiner-seller were based upon each refiner-seller's percentage share of the total refining capacity of all refiner-sellers as of January 1, 1973.

In December 1976, U.S. Oil entered into an agreement with the Atlantic Richfield Company (Arco), a refiner-seller, to purchase ——— barrels of "Alaskan Cook Inlet crude oil." Arco was obligated to deliver the crude oil to U.S. Oil's refining facilities at Tacoma, Washington during the period December 1, 1976, through February 28, 1977. The agreement provided that the price was to be computed in accordance with the provisions of 10 CFR 212.94, as amended, which established the method for determining the maximum price for crude oil purchased under the buy/sell program:

Price: The sale and delivery of crude oil or condensate hereunder is made pursuant to the Mandatory Petroleum Allocation Regulations of the Federal Energy Administration (Subpart C of Part 211 of 10 CFR Chapter II) and amendments thereto, and the price you agree to pay us therefor shall be computed pursuant to the terms hereof and in accordance with Section 212.94 of Subpart E of Part 212—Mandatory Petroleum Price Regulations as amended.

After delivery of the crude oil, Arco sent U.S. Oil an invoice which included a "Cook Inlet P/L Charge" (P/L is the abbreviation for pipeline) of ——— per barrel. In addition, Arco included in the invoice a "Marine Transportation Charge" of ——— per barrel.

Issue

In sales of crude oil made pursuant to the buy/sell program during the period December 1, 1976, through February 28, 1977, did 10 CFR 212.94(b)(2) permit Arco, a refiner-seller, to recover from U.S. Oil, a refiner-buyer, the actual domestic transportation expenses associated with the delivery of the crude oil from Alaska to U.S. Oil's refinery?

Interpretation

For the reasons discussed below, we conclude that in sales of crude oil made pursuant to the buy/sell program during the period December 1, 1976, through February 28, 1977, 10 CFR 212.94(b)(2) permitted Arco, a refiner-seller, to recover from U.S. Oil, a refiner-buyer, the actual domestic transportation expenses associated with the delivery of the crude oil from Alaska to U.S. Oil's refinery.

During the period in question, § 212.94 provided in pertinent part: [2]

(a) *Scope.* This section applies to each sale of crude oil made pursuant to the provisions of § 211.65 of this chapter, effective for sales obligations for the allocation quarter commencing March 1, 1976, and subsequent allocation quarters.

(b) *Rule.* (1) Notwithstanding the general rules described in this subpart, the price at which crude oil shall be sold when required in § 211.65 of Part 211 of this chapter shall not exceed the weighted average per barrel landed cost (as defined in § 212.82, but utilizing the volumes of imported crude oil at the time of importation thereof into the United States) of all imported crude oil (other than crude oil imported from Canada) delivered to a refiner-seller in the month in which the sale is made and the two months preceding that month, plus a handling fee of five cents per barrel, and any transportation, gravity and sulphur content adjustments as specified in subparagraphs (2) and (4), respectively, of this paragraph (b). For purposes of calculating the weighted average per barrel landed cost under this paragraph (b)(1), a refiner-seller shall include pipeline tariffs, water transportation and terminalling costs, exchange differentials, insurance and taxes paid to deliver such imported crude oil to the refiner-seller's refineries. . . .

(2) *Actual transportation expenses* incurred to move the crude oil to the refiner-buyer's refinery shall be paid by the refiner-buyer. 41 FR 16448 (April 19, 1976). (Emphasis added.)

Thus, § 212.94 permitted a refiner-seller to include two items in the computation of the maximum allowable price which could be charged to refiner-buyers for buy/sell crude oil: (1) the weighted average "landed cost" (as defined in § 212.82) of foreign crude oil delivered to a refiner-seller, a handling fee of $.05 cents per barrel, and certain adjustments; and (2) the actual domestic transportation costs associated with transferring crude oil to the refiner-buyer. *See Crown Central Petroleum Corp.,* Interpretation 1978–39, 43 FR 29545 (July 10, 1978).

The plain meaning of § 212.94, as it existed at the time the crude oil in question was sold by Arco to U.S. Oil, allowed Arco to include under § 212.94(b)(2) the actual expenses incurred in transporting crude oil from Alaska to U.S. Oil's refinery.[3] Such expenses included the Cook Inlet P/L Charge and the Marine Transportation Charge included in Arco's invoice to U.S. Oil. U.S. Oil relies, however, on one sentence contained in the preamble to former § 212.94(b)(2), in support of its requested interpretation that Arco was not permitted to include these actual transportation expenses in the buy-sell price, because they were not "additional" transportation expenses that would not have been incurred to deliver the crude oil in question to Arco's own refineries:

As to adjustments for transportation expenses, the rule adopted provides that the refiner-buyer will be charged any actual *additional* transportation expenses that are incurred to move the crude oil to the refiner-buyer's refinery. 41 FR 16448 (April 19, 1976). (Emphasis added.)

The foremost obstacle to U.S. Oil's requested interpretation is that the word "additional" and a related sentence were deleted from the description of allowable transportation expenses in § 212.94(b) in the very rulemaking to which this preamble relates. Effective March 1, 1976, this rulemaking promulgated § 212.94(b) (quoted above) as it existed at the time Arco sold U.S. Oil the crude oil in this case, and both Arco and U.S. Oil must be presumed to have been aware of this deletion when they subsequently agreed on the price term in the contract in this case, that referred to § 212.94(b) "as amended." Prior to this time, allowable transportation expenses under this section had included "actual additional transportation expenses" and excluded "actual transportation expenses saved as a result of moving the offered crude oil directly to the refiner-buyer's refinery. . . ." 39 FR 17287 (May 10, 1974); 40 FR 28448 (July 7, 1975).

FEA recognized the significance of this deletion when it subsequently amended the section, effective October 1, 1977, expressly to prohibit a refiner-seller from including as a domestic transportation expense for Alaskan Crude Oil the types of actual transportation expenses Arco has included in this case. 42 FR 37406 (July 21, 1977); 42 FR 54257 (October 5, 1977).

This history requires us to assign no significance to the use of the word "additional" in the above-quoted preamble that is inconsistent with the word's omission from the regulation itself. We thus regard its use in the preamble as mere surplusage and decline to issue U.S. Oil's requested interpretation that we change the plain meaning of the former § 212.94(b) to conform with U.S. Oil's reading of this brief descriptive statement in the accompanying preamble.

Issued in Washington, D.C., on May 7, 1979.

Everard A. Marseglia, Jr.

Assistant General Counsel for Interpretations and Rulings.

Interpretation 1979–02M

To: Placid Oil Company

Regulations and Rulings Interpreted: 10 CFR 212.83 and 212.167(b)(3); Ruling 1975–6

Code: GCW–PI–Natural Gas Shrinkage

Facts

Placid Oil Company (Placid) is engaged in the production of natural gas as the operator of the Black Lake Pettit Zone Unit, Black Lake Field, Natchitoches Parish, Louisiana (Black Lake). A reservior containing crude oil

[2] The rule was adopted in this form effective March 1, 1976, 41 FR 16448 (April 19, 1976), and remained in that form until its subsequent amendment effective October 1, 1977. 42 FR 54257 (October 5, 1977). The rule as it presently exists would allow Arco to include in the buy-sell price transportation expenses for Alaskan crude oil that equal "the actual cost of transporting the Alaskan crude oil from the port of entry into the lower 48 States to the refiner-buyer's refinery." § 212.94(b)(2)(i)(B). In other words, adding a Cook Inlet P/L charge and marine transportation costs from Alaska to the lower 48 States to the buy-sell price, as Arco did in this case, is now expressly prohibited.

[3] A refiner-buyer could, of course, have negotiated conditions of sale that would have limited the maximum pricing flexibility the regulations allowed a refiner-seller. U.S. Oil, however, did not reach an agreement with Arco that contained any such limitations, but as indicated above accepted an agreement from Arco specifying the source of the Oil to be delivered, Alaskan Cook Inlet crude oil, and a price term that only provided that it be computed in accordance with § 212.94, *as amended.*

and natural gas was discovered in 1964 at Black Lake.

Placid sought approval of a full pressure maintenance program at Black Lake, rather than having the Louisiana Conservation Commission initiate a fact-finding proceeding with the likelihood of a contested hearing. With respect to the Black Lake operations, a gas cycling full pressure maintenance program was intended to increase recovery of crude oil and condensate. The program was not expected to improve the overall recovery of either natural gas or natural gas liquids (NGL's). Three benefits generally result from a gas cycling full pressure maintenance program such as the one initiated by Placid:

(1) pressure maintenance limits the influx of water into the reservoir;

(2) as the reinjected dry gas expands into the oil rim (not to be confused with the gas cap), oil is absorbed thereby increasing the overall recovery of crude oil; and

(3) maintenance of reservoir pressure reduces retrograde condensate losses thereby increasing the overall recovery of condensate.

Unitization of the reservoir and the recommended plan of operation were approved by the Department of Conservation, and made effective January 1, 1966. Sales of natural gas volumes from Black Lake were deferred from 1965 to 1975 pursuant to Orders by the State of Louisiana Department of Conservation. By Order #686-A-3 dated December 20, 1965, the Department of Conservation determined that a "unitized gas cycling and pressure maintenance operation of the Pettit Zone Reservoir is reasonably necessary. . . ." The Order also provided for the purchase of additional volumes of gas from third parties for injection into the reservoir in addition to all the natural gas production from Black Lake. On August 21, 1975, Order #686-A-6 was issued by the Department of Conservation permitting a decrease in the volumes of gas to be injected and authorizing a delivery of a portion of the natural gas production.

All of Placid's interest in the Black Lake Field natural gas was committed and sold pursuant to two separate contracts dated August 1975 to Louisiana Intrastate Pipeline Company and Placid Refining Company.[1] Currently, Black Lake natural gas is being delivered under these contracts at the specified rate.

Placid is the owner and operator of a gas plant at which NGL's are extracted from natural gas producted at Black Lake. Sale of such NGL's commenced in April 1967.

Part 212 of the Mandatory Petroleum Price Regulations has always permitted the recoupment of increased costs of "wet" gas consumed in the extraction of NGL's by the inclusion of increased "costs of natural gas shrinkage" in the calculation of maximum lawful prices. 10 CFR 212.162; 212.167(b)(3). *See* Ruling 1975-6, 40 FR 23272 (May 29, 1975). Placid calculated increased shrinkage costs associated with the extraction of NGL's from Black Lake natural gas in the following manner:

(a) August 1973 through July 1975—Shrinkage costs, measured on an Mcf basis, were calculated according to the "inlet-outlet" method sanctioned by Ruling 1975-18, 40 FR 55860 (December 2, 1975), except as set forth below. The sales price for residue gas in May 1973 was imputed, based on a neighboring field price per Mcf. Sales prices for residue gas in the relevant month were imputed according to prices in the same neighboring field.

(b) August 1975 through December 1975—Shrinkage costs, measured on an Mcf basis, were calculated according to the "inlet-outlet" method sanctioned by Ruling 1975-18, *supra*. A current residue gas selling price per Mcf was employed in shrinkage calculations based on the then current prices according to contracts for sale of Black Lake natural gas between Louisiana Intrastate Gas Corporation and Placid Refining Company.

(c) January 1, 1976 to the present—Shrinkage costs, measured on a Btu basis, were calculated according to Ruling 1975-18, *supra*. Current month residue gas sales prices per MMBtu were employed in shrinkage calculations according to contracts for sale of Black Lake natural gas with Louisiana Intrastate Gas Corporation and Placid Refining Company.

Placid, owning approximately 85 percent of Black Lake, claimed a total of about —— million of increased shrinkage costs from August 1973 to August 1, 1975. Placid alleges that if it had not claimed any increased shrinkage costs when computing maximum lawful prices, then continuation of the gas cycling full pressure maintenance program could not have been justified economically on either a "present worth" or "ultimate recovery" basis. Placid, therefore, asserts that it would have been forced to agree to initiate gas sales, which the minority interest owners had sought from the beginning of production at Black Lake. (Placid would have had the right to present evidence to the Department of Conservation that the method by which it produced natural gas from Black Lake could not be economically justified. The Department of Conservation could then have rescinded Order #686-A-3 and permitted gas sales from Black Lake.) In such event, however, Placid alleges that the ultimate recovery of liquid hydrocarbons would have been reduced.

Issue

Has Placid, as described above, properly calculated its increased "cost of natural gas shrinkage" with reference to NGL's extracted from Black Lake natural gas?

Interpretation

For the reasons set forth below, the Department of Energy (DOE) has concluded that the manner in which Placid describes that it calculated its increased cost of natural gas shrinkage was not permitted under the Mandatory Petroleum Price Regulations.

Placid is a "refiner" as defined in 10 CFR 212.31 and a "gas plant owner" and "gas plant operator" as defined in § 212.162.

Prior to the promulgation of Part 212, Subpart K, effective January 1, 1975, the more general refiner price regulations governed the proper pricing of NGL's. *National Helium Corp.* v. *FEA*, 569 F. 2d 1137 (TECA 1977); *Mobil Oil Corp.* v. *FEA*, 566 F. 2d 87 (TECA 1977).[2] The then applicable refiner price regulations—designed specifically to address crude oil refineries—were not altogether well-suited for gas processing plants. Thus, those regulations did not expressly treat certain increased raw material product costs associated with the manufacture of NGL's from "wet" natural gas. In the preamble to the proposed Subpart K, the FEA acknowledged this problem stating:

The refiner price rules of the FEA are not, however, well-suited for regulating prices of liquid products produced from natural gas by gas processors, since the operations of a gas plant are quite different from those of a refinery. In effect, the application of the refiner price rules to gas plants has had the result of limiting the lawful prices of natural gas liquids to essentially their May 15, 1973, levels, since gas plants have typically had little or no increased cost of natural gas, from which natural gas liquids are produced. The natural gas from which these liquids are extracted is not consumed in the process, as is crude oil in the refining process. Rather, there is a "shrinkage" in the volume and BTU content of the gas. 39 FR 32718, 32719 (September 10, 1974).

In order to clarify the treatment of increased product costs for gas processors in the period prior to promulgation of Subpart, K, the FEA issued Ruling 1975-6, 40 FR 2372 (May 29, 1975).[3] That ruling states, in pertinent part, that:

Although Subpart E of Part 212 of FEA's regulations specifically addresses only the passthrough of the increased cost of crude petroleum and petroleum product, a comparable dollar-for-dollar passthrough of increased shrinkage costs is also permitted. . . . *The cost of such shrinkage is the reduction in sales revenues that could otherwise have been received for the natural gas pursuant to the contract under which the gas is being sold, if its volume or BTU content had not been reduced through processing to extract natural gas liquids.*

Accordingly, *where the natural gas sales revenues are reduced by processing*, and where the selling price of the natural gas that has been processed has increased since May 15, 1973, *the cost of shrinkage resulting from extraction of the liquids will also have increased.* The FEA considers this increased shrinkage to be an "increased product cost" under § 212.83 and it may therefore be recovered on a dollar-for-dollar basis in [the firm's] base prices for natural gas liquid products in the month following the month of measurement.

The cost of shrinkage shall be determined by comparing the value of the natural gas

[1] Placid Refining Company and Placid Oil Company are affiliated entities. *See* Fed. Energy Guidelines, ¶18,159.

[2] The refiner price regulations effective from August 19, 1973 to December 31, 1974, issued by predecessor agencies of the Department of Energy, the Cost of Living Council, the Federal Energy Office and the Federal Energy Administration (FEA), were often amended in ways not pertinent to this issue.

[3] Ruling 1975-6 represents the official regulatory position concerning the allowance and computation of increased shrinkage costs prior to the promulgation of Subpart K.

prior to processing with the value of the natural gas after processing. The value of the natural gas stream for this purpose *shall be computed by reference to the contractual terms in effect for the sale of [the firm's] "residue" natural gas during the relevant month.* (Emphasis added.)

Thus, increased shrinkage costs are designed to permit recoupment in NGL prices of the reduction in sales revenue resulting from the processing of natural gas by reference to the contractual price terms in the relevant month for that residue gas.

Increased shrinkage "costs" are a compensation for lost opportunities, *i.e.*, opportunities to sell the natural gas without extracting the liquid content of the "wet" stream.

This opportunity cost is measured "by reference to the contractual terms in effect for the sale of (the firm's) 'residue' natural gas during the relevant month." *Id.* Subpart K now imposes the same general requirements for measuring shrinkage costs in § 212.162, which states in pertinent part:

"Cost of natural gas shrinkage" means the reduction in selling price per thousand cubic feet (MCF) of natural gas processed, which is attributable to the reduction in volume or BTU value of the natural gas resulting from the extraction of natural gas liquids, *as determined pursuant to the contract in effect at the time for which cost of natural gas shrinkage is being measured, and under which the processed natural gas is sold.* (Emphasis added.)

We have recently considered the propriety of shrinkage calculations pursuant to Subpart K when no sales of residue gas were made in the current month. *Martin Exploration Company,* Interpretation 1978–27, 43 FR 25085 (June 9, 1978). Martin's operation of the Wilcox Unit parallels Placid's operation of Black Lake in important aspects:

Martin is delaying sales of natural gas from the Wilcox Unit to maintain a pressure cycling operation to increase the ultimate recovery of condensate from that unit. * * * [S]ince there is no sale of the processed natural gas, it is impossible for the firm to determine "cost of natural gas shrinkage" in accordance with the express language of § 212.162. *Id.*

Furthermore, Martin suggested, as Placid has, that a residue gas sales price be imputed from a neighboring field as a reasonable alternative to a literal reading of § 212.162. In response to Martin's contention the Interpretation explained:

Martin suggest that the highest gas sales price which Martin is receiving under a contract covering its properties in South Louisiana during the month of extraction could be used to obtain an "imputed" price.

In its submission Martin recognizes the speculative nature of estimating the opportunity costs associated with NGL extraction and the necessity of *constructing* a method of measuring increased shrinkage costs at the Wilcox Unit. Contrary to Martin's assertions, formulating a method to compensate for the loss of gas revenues resulting from NGL extraction is not a simple, straightforward process. For example, the imputed figures must speculatively and implicitly determine whether the gas will be sold subject to price regulation and sold on a British thermal unit (Btu) or volumetric (Mcf) basis. * * *

The interpretations process is neither a substitute nor an alternative forum for rulemaking or exception relief. Issues of equity and the maximization of general energy policy objectives are best resolved on the basis of the extensive factual information which can be developed in those forums. *Id.* Because the requirements, pertinent to these facts, for measuring increased shrinkage costs under Subpart K and Ruling 1975–6 are identical, Placid's imputation of prices at Black Lake for residue gas sales based on neighboring field prices was not proper.

Placid maintains that increased product costs, including increased cost of natural gas shrinkage, must be passed through on a dollar-for-dollar basis in conformance with § 4(b)(2) of the Emergency Petroleum Allocation Act of 1973 (EPAA), as amended, Pub. L. No. 93–159 (November 27, 1973).[4] Placid argues that by imputing residue gas sales prices from neighboring fields it was simply acting in accord with § 4(b)(2) at a time before Ruling 1975–6 was issued when the Subpart E refiner price rules neither explicitly nor unambiguously authorized recoupment of increased shrinkage costs. Placid argues that to disallow increased shrinkage costs because of the failure to follow the method specified in Ruling 1975–6, which was not issued until after the time when those calculations were to be made would violate the dollar-for-dollar passthrough requirement contained in § 4(b)(2) of the EPAA.[5]

It should be noted that the refiner price regulations in Subpart E provided no express authorization for any shrinkage calculations whatsoever. Ruling 1975–6 was the first official pronouncement that such costs could properly be claimed. After issuance of that Ruling Placid first calculated and claimed shrinkage costs in the manner previously described. Since the regulations in effect prior to Ruling 1975–6 did not specifically authorize any shrinkage calculations, then Placid's method must conform with the limits of the elective, retrospective benefit offered by Ruling 1975–6.

Ruling 1975–6 was issued "to make explicit that the regulations of Subpart E . . . afford [a] dollar-for-dollar passthrough of the increased costs of natural gas shrinkage; *in the same manner as is now expressly provided for in Subpart K.*" Computation and recoupment of increased shrinkage costs were designed to compensate on a dollar-for-dollar basis for lost revenues resulting from the extraction of the liquids from the wet natural gas stream. § 212.167(a). For gas processors, increased shrinkage costs are the equivalent of an increased product cost in their operations and are so treated for regulatory purposes pursuant to both the Subpart E and the Subpart K regulations. Ruling 1975–6, *supra*; 39 FR 44407, 44409–10 (December 24, 1974). While the opportunity costs described as increased shrinkage costs are the equivalent of increased product costs, such "costs" do not represent outlays of dollars and therefore cannot be recouped on an exact dollar-for-dollar basis. *Kansas-Nebraska Natural Gas Co.,* Interpretation 1978–41, 43 FR 29548 (July 10, 1978). Section 4(b)(2)(A) of the EPAA does not require that Placid be permitted to impute a value in dollars or residue gas not sold, which value may then be employed in shrinkage calculations.

Increased shrinkage costs were designed to compensate, on a dollar-for-dollar basis, for a lost opportunity which Placid did not incur. Placid did not receive smaller gas sales revenues from August 1973 to July 1975 as a result of the extraction of natural gas liquids, because Placid did not sell Black Lake natural gas in that period. As the DOE has stated in an exception decision:

In the present case Twin-Tech does not actually incur any increased costs of natural gas shrinkage *because it does not sell its residual natural gas and does not therefore, experience a 'reduction in sales revenues.'* *Twin-Tech Oil Company,* 5 FEA ¶83,126, at 83,561 (March 28, 1977), *aff'd,* 6 FEA ¶80,505 (September 30, 1977), *aff'd sub nom., Twin City Barge & Touring Company* v. *Schlesinger,* No. H–77–1577 (S.D. Tex., Nov. 13, 1978). Placid maintains that once the liquids are extracted, sales revenues from the natural gas must perforce be reduced. The fact that this lost opportunity cannot be measured in the conventional way, Placid asserts, should not preclude recovery of these "costs" pursuant to § 4(b)(2) of the EPAA. Nevertheless, increased shrinkage costs are recognized for cost computation and allocation only when the gas sales revenues due to extraction are lost, *i.e.*, when the residue gas is sold. Prior to that time, there is no guarantee that the gas will be sold and that a firm will actually incur any lost opportunity cost.

Placid argues that shrinkage costs were actually incurred, because the raw material, natural gas, was consumed in the process of extracting natural gas liquids. Placid asserts that the only relevance of the residue gas sales contract is that it provides one method, but not the only method, of placing a value on

---

[4] 15 U.S.C. § 751, *et seq.* (1976).

[5] Section 4(b)(2)(A) of the EPAA, as amended, states as follows:

(2) In specifying prices (or prescribing the manner for determining them), the regulation under subsection (a)—

(A) shall provide for a dollar-for-dollar passthrough of net increases in the cost of crude oil, residual fuel oil, and refined petroleum products at all levels of distribution from the producer through the retail level; * * *.

Prior to its amendment on December 22, 1975, in the Energy Policy and Conservation Act, Pub. L. No. 94–163, effective February 1, 1976, § 4(b)(2)(A) of the EPAA applied only to refiners marketing "at the retail level." Although this provision speaks directly only to "crude oil, residual fuel oil, and refined petroleum products," the Temporary Emergency Court of Appeals has upheld DOE's statutory authority to regulate natural gas liquids and natural gas liquid products stating:

"We are convinced that Congress contemplated substantially greater coverage for the EPAA than would result from strict adherence to the technical meanings of the terms 'crude oil, residual fuel oil, and refined petroleum products.' "

Mobile Oil Corp. v. FEA, 566 F.2d 87 at 99 (1977); *accord, National Helium Corp. v. FEA,* 509 F.2d 1137 (TECA 1977).

the raw materials which a gas processor uses to manufacture natural gas liquids. Placid bolsters its conclusion by reference to various administrative precedents which either interpret the term "produced and sold" to include the internal consumption of crude oil, *Phillips Petroleum Co.*, Interpretation 1977-12, 42 FR 31148 (June 20, 1977); *Tenneco Oil Co.*, 5 FEA ¶80,506 (December 21, 1976); or require the allocation of increased costs to products consumed internally, Ruling 1974-27, 39 FR 44415 (December 24, 1974). These precedents, according to Placid, demonstrate that the key consideration is "value," a factor which exists regardless of the existence of an actual residue gas sales contract.

Placid's reliance on these precedents is misplaced, because the key consideration is the *reduction in revenue* in natural gas sales attributable to the extraction of NGL's. Ruling 1975-6; § 212.162; 39 FR 44407, 44409 (December 24, 1974). If the natural gas is injected into the ground instead of sold, then there is no reduction in gas sales revenue in the relevant current month resulting from the extraction of liquids. The amount of gas sales revenue lost as a result of NGL extraction is measured by the contracts under which the processed gas is sold, because the liquids would presumably have been sold under those contracts as part of the "wet" gas had no processing occurred. Until and unless the processed natural gas is sold, there is no current increased lost opportunity cost to Placid from extracting NGL's.

Placid also argues that imputing a residue gas sales price from a neighboring field is supported by analogy and reference to the crude oil producer price regulations contained in Subpart D. Those rules generally and historically have permitted imputation of a posted price where necessary by reference to the posted price for "that grade of domestic crude oil which is most similar in kind and quality in the nearest field. . . ." §§ 212.73; 212.74.

There is no authorization in any pronouncement of the DOE, or its predecessor agencies, which permits the *ad hoc* incorporation of Subpart D producer price rules into the refiner price rules of Subpart E and Subpart K. Additionally, there are sound reasons for rejecting the analogy in this instance. Crude oil prices are administered prices, *i.e.*, the maximum lawful prices that may be charged and are not specifically and directly related to costs actually incurred, nor to lost opportunity costs incurred as in shrinkage cost determinations. Under the non-cost related crude oil pricing regulations, the important references for imputation are the physical characteristics and location of the crude oil. Because processed natural gas sales revenues depend on the applicability of varying natural gas pricing regulations and on whether relevant contracts base price terms on volume (Mcf) or heating value (Btu), there is no assurance that prices used in one gas field will in any way approximate the price opportunities in another field. Placid maintains that the prices in the field which were selected for use in its shrinkage calculations were reasonable and did not represent the highest prices which could have been selected. Nevertheless, the fact that Placid may have imputed a "reasonable" price does not mean that imputation is sanctioned by the price regulations.

Finally, Placid asserts that if it were aware that increased shrinkage cost were not available where there were no sales of residue gas, then Placid would have applied to the Louisiana Conservation Commission for permission to make immediate sales of natural gas and to discontinue the pressure cycling program. According to Placid, without allowance of shrinkage costs its pressure cycling program could not have been economically justified to the Louisiana Conservation Commission. Thus, Placid delayed sales of residue gas thereby increasing production of condensate allegedly without knowledge that such a course would frustrate recovery of its raw material costs. Many of Placid's contentions, including this one, are potentially cognizable in the exceptions process, but do not assist the proper construction of the pricing regulations. In fact, on a prospective basis, one company has been granted price relief through the exceptions process to account for the economics of a similar pressure maintenance operation. *Martin Exploration Company*, 2 DOE ¶ ——— (January 5, 1979).

Accordingly, as described above for the period from August 19, 1973, through December 31, 1974, Placid has not calculated its increased cost of natural gas shrinkage in conformance with the price regulations.

From January 1, 1975, through July 31, 1975, Placid made no sales of residue gas. During that period Placid's pricing of NGL's was governed by Subpart K. As discussed previously, in *Martin* we held that shrinkage costs were not allowed under Subpart K unless there were sales of residue gas in the relevant month. Placid has offered no reason to depart from the rationale of that Interpretation and, therefore, we conclude that Placid has not calculated its increased cost of natural gas shrinkage from January 1, 1975, through July 31, 1975, in conformance with the price regulations.

From August 1, 1975, to the present, Placid has made sales of residue gas in the relevant current month. In the shrinkage calculations during this period, Placid used the weighted average selling price of residue gas according to the contracts in effect during the month the gas was processed. The weighted average selling price of residue gas calculated in this manner consists of sales to an unaffiliated entity (Louisiana Intrastate Gas Corporation) and to an affiliated entity (Placid Refining Company). Because Placid Oil Company and Placid Refining Company are parts of the same "firm" as defined in § 212.82, prices established in such intrafirm transfers are not recognized for the purpose of calculating increased costs of natural gas shrinkage. *See HNG Petrochemicals, Inc.*, Interpretation 1978-62, 44 FR 3021 (January 15, 1979). The definitions of "firm" and "parent and consolidated entities" require companies to compute increased costs and determine maximum lawful selling prices on a consolidated basis. §§ 212.82; 212.31. Therefore, internal "firm" arrangements to account for individual, affiliated profit centers are not determinative of the method to be used for calculations of a firm's maximum lawful selling prices under the Mandatory Petroleum Price Regulations. There must be a sale by a seller that is different from and unaffiliated with the buyer as a prerequisite to the recognition of a price for the purposes of calculating the cost of natural gas shrinkage. § 212.162. *See Enterprise Products Co.*, Interpretation 1975-3, 42 FR 23724 (May 10, 1977).

The recognition of intrafirm prices for the purpose of shrinkage calculations would permit the manipulation of such cost calculations since such "prices" may not represent the product of arm's-length negotiations, and could, for example, be higher than subsequent sales to unaffiliated entities. Thus, only the use in shrinkage calculations of the weighted average selling price charged by the firm (Placid Oil Company and all affiliated entities) to unaffiliated entities (such as Louisiana Intrastate Gas Corporation) as determined according to the firm's contract price for residue gas in the relevant current month from Black Lake from August 1975 to the present is and was proper.[6]

Issued in Washington, D.C., on May 4, 1979.

Everard A. Marseglia, Jr.

Assistant General Counsel for Interpretations and Rulings.

Interpretation 1979-9

To: Florida Power & Light Company

Regulations Interpreted: 10 CFR 211.103(c)(1), 211.51

Code: GCW-AI—Allocation Levels, Definition of "Energy Production"

Facts

Florida Power & Light Company (FPL), a firm which generates electrical energy by utilizing petroleum based and nuclear fuels, has filed a request for interpretation of the Mandatory Petroleum Allocation Regulations. 10 CFR Part 211. The request relates to the characterization of FPL's activities as "energy production" and its entitlement under the allocation regulations to motor gasoline used in service vehicles at the firm's various plants and in the performance of service obligations to its customers. FPL is a "bulk purchaser" of motor gasoline as that term is defined in 10 CFR 211.102:

any firm which is an ultimate consumer which, as part of its normal business practices, purchases or obtains motor gasoline from a supplier and * * * receives delivery of that product into a storage tank substantially under the control of that firm at a fixed location * * *.

The allocation levels applicable to bulk purchasers of motor gasoline are governed by § 211.103, which provides that such firms are entitled to purchase motor gasoline under an allocation level subject to reduction by application of an allocation fraction [1] either

[6] Of course, since Placid made no sales of Black Lake residue gas on May 15, 1973, the appropriate imputed price of per MMBtu must be employed. § 212.170.

[1] Agricultural production and Department of Defense use are not subject to an allocation fraction, and firms engaged in such activities are entitled to 100 percent of current requirements.

in reference to current requirements, or in reference to the applicable base period, depending on certain specified uses. "Energy production" is one of the uses set forth in § 211.103(c)(1), that qualifies a user to receive from its supplier 100 percent of current requirements, as reduced by application of the allocation fraction. Section 211.103(c)(2) sets forth four other motor gasoline uses that qualify for 100 percent of base period use as reduced by application of an allocation fraction. (Because this provision requires calculations utilizing base period volumes, which remain constant, the resulting allocations will, in most cases, be less than those based upon current requirements, which accommodate increased usage over time.)

FPL contends that its entire use of motor gasoline is related to energy production as defined at § 211.51 and, therefore, that it is entitled under § 211.103(c)(1) to purchase motor gasoline from its supplier in volumes based upon current requirements, and is not limited under § 211.103(c)(2) to volumes determined in accordance with base period purchases.

Issue

Is Florida Power & Light Company's entire use of motor gasoline related to "energy production" as that term is defined in § 211.51, and is that firm entitled, pursuant to § 211.103(c)(1), to an allocation level of 100 percent of its total current requirements of motor gasoline as reduced by application of the allocation fraction?

Discussion

For the reasons discussed below, the Department of Energy (DOE) concludes that FPL's generation of electricity from petroleum based sources is specifically excluded from the definition of "energy production" in § 211.51. However, FPL is entitled pursuant to § 211.103(c)(1) to an allocation level of 100 percent of current requirements of motor gasoline (as reduced by application of the allocation fraction) with respect to the motor gasoline used by the firm and attributable to electricity generated from nuclear fuels. FPL's remaining use of motor gasoline entitles the firm to purchase motor gasoline from its supplier in an amount equal to 100 percent of its base period use (as reduced by application of the allocation fraction), pursuant to § 211.103(c)(2).

"Energy production" is defined in § 211.51 as:

[T]he exploration, drilling, mining, refining, processing, production and distribution of coal, natural gas, geothermal energy, petroleum or petroleum products, shale oil, nuclear fuels and electrical energy. It also includes the construction of facilities and equipment used in energy production, such as pipelines, mining equipment and similar capital goods. *Excluded from this definition are* synthetic natural gas manufacturing, *electrical generation whose power source is petroleum based,* gasoline blending and manufacturing and refinery fuel use. (Emphasis added.)

FPL argues that the sentence that excludes "electrical generation whose power source is petroleum based" modifies the second sentence quoted above, which includes in this definition the "construction of facilities and equipment used in energy production." A plain reading of this provision, however, compels the opposite conclusion. The words "excluded from this definition" clearly and explicitly refer to the definition of energy production itself, and therefore mean that electrical generation whose power source is petroleum based is not energy production for purposes of § 211.103(c)(1).

This exclusion is entirely consistent with Congress' intention, as indicated in the Conference Report which accompanied the Emergency Petroleum Allocation Act of 1973 (EPAA), as amended, Pub. L. No. 93–159 (November 5, 1973)[2] to grant the President full and explicit authority to identify permissible uses of covered fuels and to restrict the amounts which may be made available for such uses. The exclusion in the definition at issue is intended to discourage the consumption of motor gasoline, a valuable fuel in short supply, by firms that use petroleum based fuels to generate electricity.

We regard FPL's proposed construction of the language of § 211.51 as unpersuasive and in conflict with the plain meaning of that regulatory provision and the congressional intent of the EPAA. Therefore, we are unable to conclude that FPL's entire use of motor gasoline is related to "energy production" as defined in § 211.51. However, to the extent that FPL produces electrical energy from other than petroleum based sources, such production qualifies as energy production under § 211.103(c)(1). FPL has indicated in its submission that it is impossible to differentiate between those uses of motor gasoline by FPL which may be associated with the generation of electricity by petroleum based sources and those uses related to nuclear based electrical generation. However, in order to qualify the use of motor gasoline related to the production of electrical energy from nuclear fuels for the preferential allocation level of § 211.103(c)(1), FPL must determine on a reasonable basis the current volumes of motor gasoline so attributable to that production.

Issued in Washington, D.C. on May 17, 1979.

Everard A. Marseglia, Jr.,

Assistant General Counsel, for Interpretations and Rulings.

Interpretation 1979–11

To: Mobil Oil Corporation
Regulation Interpreted: 10 CFR 212.84
Code: GCW—PI—Disallowance of costs; Part 212, Subpart E

Facts

Mobil Oil Corporation (Mobil) has filed a request for interpretation to resolve an issue that arises under the Mandatory Petroleum Price Regulations. 10 CFR Part 212. Mobil is a purchaser of foreign crude oil, which it imports into the United States and refines into, and sells as, covered products. As such Mobil is a "refiner" as that term is defined in 10 CFR 212.31.

The number of countries from which Mobil receives foreign crude oil on a preferential basis has recently decreased substantially. For example, Mobil no longer lifts equity crude oil in Venezuela, Iran, Iraq or Qatar. Nevertheless, crude oil from these countries is available on the open market. With respect to purchases of crude oil in these and other countries, Mobil requests an interpretation regarding the proper method of establishing the cost of crude oil purchased in arms-length transactions in countries where Mobil no longer lifts equity crude oil or otherwise receives crude oil on a preferential basis.

Issue

Does the fact that Mobil at one time lifted equity crude oil or otherwise received crude oil on a preferential basis in a particular country mean that the disallowance provisions of 10 CFR 212.84 are applicable to arms-length transactions which occur after the termination of preferential treatment that had been extended to Mobil and its affiliated entities in that country?

Interpretation

For the reasons discussed below, the Department of Energy (DOE) has concluded that the fact that Mobil, including its affiliated entities, at one time lifted equity crude oil or otherwise received crude oil on a preferential basis in a particular country does not mean that the disallowance provisions of 10 CFR 212.84 are applicable to crude oil purchases by Mobil, or an affiliated entity, in arms-length transactions, so long as such arms-length transactions occur after the termination of all preferential treatment. The cost of such crude oil to Mobil is the price as determined under 10 CFR 212.84(g).

The provisions of 10 CFR 212.84 set forth the standards by which refiners establish the cost of imported crude oil purchased in transactions between affiliated entities and the standards by which DOE disallows or reallocates landed costs pursuant to the refiner price rule. Section 212.84(c) provides:

(c) *Cost of crude oil. Except as provided in paragraph (g) of this section,* the cost of crude oil allowed in transactions between affiliated entities shall be equal to the price which would prevail if the affiliated entities consistently and continuously dealt with each other at arms-length. A refiner purchasing crude oil from an affiliated entity shall initially set the cost of crude oil at the f.o.b. price at the port of loading in the country of origin which is representative of those prices prevailing in arms-length transactions according to the best information available to the refiner. (Emphasis added.)

The exception contained in § 212.84(g) is as follows:

(g) *Resales.* A refiner's cost of crude oil which is purchased from unaffiliated entities and which is produced in a country *from which the refiner and its affiliated entities lift no equity crude or do not otherwise receive crude on a preferential basis* shall be the price paid to the unaffiliated entities, plus the cost of brokerage or other services, if any, provided to the refiner by the affiliated entities. In no case, however, shall the per

[2] 15 U.S.C. § 751 *et seq.* (1976).

barrel cost of those services exceed those charged in May 1973. (Emphasis added.)

Under the disallowance provisions of § 212.84, the DOE calculates "maximum" and "representative" prices for certain crude oils, and whenever a refiner's weighted average cost of acquiring imported crude oil from an affiliated entity exceeds the maximum price for that crude oil, the amount in excess of the representative price is disallowed. 10 CFR 212.84(d)(1). Maximum and representative prices are determined on the basis of transactions reported to DOE for crude oils loaded during a particular month, excluding certain transactions enumerated in § 212.84(e). Among the excluded transactions are:

(i) purchases from a host government *by refiners that also lift equity crude oil or otherwise receive crude oil on a preferential basis* from the particular country. (Emphasis added.)

Mobil seeks assurance that the DOE will not exclude arms-length transactions under § 212.84(e) or under § 212.84(g) based solely upon the refiner having lifted equity crude oil or otherwise having received crude oil on a preferential basis previously in that country, so long as the refiner and its affiliated entities do not lift any equity crude oil or otherwise receive crude oil on a preferential basis at the time such arms-length transactions occurred. In other words, Mobil seeks a determination that the DOE will not interpret the language in either of these sections so as to impose a "once preferential, always preferential" rule with regard to disallowances. That is, once a refiner receives preferential treatment (as that term is used in § 212.84) in a particular country, no subsequent transaction by that refiner could qualify as "arms-length," even though the refiner no longer received crude oil on a preferential basis in that country.

Of particular concern to Mobil is certain language, which appeared in preambles discussing these regulatory provisions. In a Further Notice of Proposed Rulemaking issued in August 1974, 39 FR 32310, 32312 (September 5, 1974) the Federal Energy Administration (FEA), a predecessor agency of the DOE, discussed the proposed exclusion in § 212.84(e)(4) as follows:

In determining market prices, FEA will exclude certain transactions. First, FEA will exclude purchases of buy-back crude, *i.e.*, repurchases of government crude *by the former equity owners*. (Emphasis added.)

And in the preamble to the final regulations, 39 FR 38364 (October 31, 1974), the FEA stated:

in the case of resales under § 212.84(g) . . . this section does not apply to oil received on a preferential basis (*e.g.*, oil to which a company is entitled because of its *prior* concessionary status) . . . . (Emphasis added.)

Mobil's concern is that this language might be used to support a "once preferential, always preferential" rule. However, there is no indication that either of these references was intended to place a more restrictive meaning on the provisions of either section than the regulatory language itself, which in both cases describes action expressed by verbs used in the present tense, *i.e.*, purchases by refiners that "*lift* equity crude oil" or otherwise "*receive* crude on a preferential basis." Rather than supporting the view that FEA intended a "once preferential, always preferential" rule, these preamble references seem to have been intended more to make it clear that with respect to any particular transaction, it is the *preferential treatment* extended to a refiner by a foreign government, whether based upon present, or former, equity lifting rights or otherwise, that determines whether or not a particular transaction—although otherwise characterized as "arms-length"—is subject to disallowance.

This is consistent with the conclusion that preferential treatment may be enjoyed by a refiner in a particular country based upon considerations other than the lifting of equity crude oil. In fact, it may be that preferential treatment is enjoyed by a particular refiner because of former lifting rights, even though such equity interests no longer exist. In such cases, the rule clearly provides that such preferential treatment would negate the "arms-length" characterization of a particular transaction and subject the cost of that purchase to disallowance by DOE by comparison to the maximum price under the procedures of § 212.84(d)(1).

The burden, of course, must rest in every instance on the refiner to establish that the firm (including all affiliated entities) does not lift equity crude oil or otherwise receive crude oil on a preferential basis in that country at the time any particular transaction takes place. Such a determination admits of several factors, and it does not necessarily follow that because a refiner no longer lifts equity crude oil in a particular country that that refiner does not otherwise currently receive crude oil on a preferential basis. Where both conditions have been met, however, and where the refiner can establish that it no longer receives preferential treatment in a particular country, it is immaterial that the refiner or an affiliated entity had at some time previously lifted equity crude oil or otherwise received crude oil on a preferential basis in that country. The FEA made this clear in the August 1974 Notice:

The cost of crude oil from countries in which the international affiliate *does nothing more* than purchase the oil from the host government or third parties and then resell it to its domestic affiliate should be measured using the price at which the oil is purchased from the third-party. (Emphasis added.) *Id.* at 32312.

Accordingly, we conclude that 10 CFR 212.84(e)(4)(i) and 212.84(g) do not provide for disallowance with respect to arms-length transactions by refiners (including all affiliated entities) that, at the time the particular transaction occurs, lift no equity crude oil and do not otherwise receive crude oil on a preferential basis in that country, regardless of whether the refiner (including all affiliated entities) received crude oil on a preferential basis in that country at some time in the past.

Issued in Washington, D.C. on May 24, 1979.

Everard A. Marseglia, Jr.,
Assistant General Counsel, for Interpretations and Rulings.

Table I-B.—Cases Dismissed

File No.	Requestor	Category	Date dismissed
A-360	Perla Oil Marketing Corp	Price	May 15.
A-399	Edmonds Street Oil Corp	Allocation	May 30.

[FR Doc. 79-20798 Filed 7-5-79; 8:45 am]
BILLING CODE 6450-01-M

FEDERAL DEPOSIT INSURANCE CORPORATION

[12 CFR Part 340]

Offering Circular Requirements for Public Issuance of Bank Securities; Statement of Policy Regarding Use of Offering Circulars in Connection With Public Distribution of Bank Securities

AGENCY: Federal Deposit Insurance Corporation ("FDIC").

ACTION: Issuance of Statement of Policy.

SUMMARY: The FDIC is issuing this Statement of Policy in order to promote greater awareness by insured State nonmember banks of their responsibilities with respect to the antifraud provisions of the Federal securities laws. The Statement of Policy is applicable to the offering of securities by insured State nonmember banks and banks in organization which intend to apply for Federal deposit insurance and replaces any previous proposals by the FDIC concerning offering circular requirements.

EFFECTIVE DATE: July 6, 1979.

ADDRESS: Hoyle L. Robinson, Executive Secretary, Federal Deposit Insurance Corporation, 550—17th Street, N.W., Washington, D.C. 20429.

FOR FURTHER INFORMATION CONTACT: Lawrence H. Pierce, Chief, Registration and Disclosure Section, Division of Bank Supervision, Federal Deposit Insurance Corporation, Washington, D.C. 20429, (202-389-4651).

SUPPLEMENTARY INFORMATION: The text of the Statement of Policy follows:

It is the FDIC's goal to have banks comply with the antifraud provisions of the Federal securities laws in a manner which meets the needs of investors, depositors and issuers.[1] The issuance of securities by banks is, however, subject to the antifraud provisions of the Federal securities laws which require full and adequate disclosure of material facts.[2] It is the responsibility of management, or promoters in the case of a bank in organization, to understand these requirements and utilize an offering circular in appropriate situations.[3]

The FDIC has further determined to adopt this Statement of Policy in view of its statutory duties relating to capital adequacy and the safety and soundness of insured banks. The Statement of Policy also has as its purpose to protect insured State nonmember banks against possible serious capital losses or insolvency that could result if bank securities are sold in violation of the antifraud provisions of the Federal securities laws.

In view of the FDIC's statutory duty to determine capital adequacy in passing upon an application for Federal deposit insurance, the FDIC intends to review whether public investors have been provided sufficient disclosure of material facts by any State nonmember bank in organization.

Inasmuch as the Statement of Policy does not impose the burden of filing and awaiting regulatory approval and allows for greater flexibility, FDIC believes it will be beneficial to small banks.

FDIC believes that every offering circular prepared by an insured State nonmember bank should, to the extent applicable, include the information listed below:

(1) the name, address, principal place of business and telephone number of the issuing bank;

(2) the amount and title of the securities being offered;

(3) the offering price and proceeds to the bank on a per share and aggregate basis;

(4) the plan and cost of distribution;

(5) the reason for the offering and the purposes for which the proceeds are to be used, and a brief description of the material risks, if any, involved in the purchase of the securities;

(6) a description of the present and proposed business operations of the bank and its capital structure;

(7) the principal officers, directors and principal security holders and the amount of securities owned by each;

(8) the remuneration and interest in recent or proposed transactions of management and principal security holders and their associates;

(9) the high and low sales prices of the securities within the past two years and the source of the quotations;

(10) a brief description of any material pending legal proceedings;

(11) a summary of any material terms and restrictions applicable to the securities;

(12) Financial Statements: a balance sheet as of the preceding fiscal year end; statements of income for the preceding two fiscal years and interim periods where necessary; notes to financial statements, and schedules of the allowance for possible loan losses.

Those banks wishing additional guidance as to the preparation of offering circulars may refer to 12 CFR Part 16 of the Rules and Regulations of the Comptroller of the Currency. The FDIC's staff will be available to assist banks where needed. Banks may contact FDIC's Registration and Disclosure Section, Division of Bank Supervision, 550—17th Street, N.W., Washington, D.C. 20429. (202) 389-4651.

By direction of the Board of Directors, July 2, 1979.

Federal Deposit Insurance Corporation,

Hannah R. Gardiner,

Assistant Secretary.

[FR Doc. 79-20949 Filed 7-5-79; 8:45 am]

BILLING CODE 6714-01-M

[1] The FDIC recognizes the efforts of certain states in regulating the offering of securities by insured State nonmember banks and encourages the adoption of regulations and review procedures at the state level; however, because of a lack of uniformity among all states, FDIC considers the adoption of this Statement of Policy which will apply to all insured State nonmember banks appropriate.

[2] Section 17(a) of the Securities Act of 1933 (15 U.S.C. § 77q(a)) and Rule 10b-5 (17 CFR § 240.10b-5) of the Securities and Exchange Commission ("SEC") promulgated under section 10(b) of the Securities Exchange Act of 1934 (15 U.S.C. § 78j(b).

[3] SEC Rule 10b-5 (17 CFR § 240.10b-5) makes it unlawful in connection with the offer or sale of a security: * * *

(a) To employ any device, scheme, or artifice to defraud,

(b) To make any untrue statement of a material fact or to omit to state a material fact necessary in order to make the statements made, in the light of the circumstances under which they were made, not misleading, or

(c) To engage in any act, practice, or course of business which operates or would operate as a fraud or deceit upon any person, in connection with the purchase or sale of any security.

NATIONAL CREDIT UNION ADMINISTRATION

12 CFR Part 701

Organization and Operations of Federal Credit Unions; Interpretive Ruling—Share Accounts

AGENCY: National Credit Union Administration.

ACTION: Interpretation of General Applicability.

SUMMARY: The National Credit Union Administration interprets its final ruling on Share Accounts. The purpose of this interpretive ruling is to confirm (1) that share draft accounts must qualify as a regular share account and (2) the dividend rate paid on regular share accounts may vary.

EFFECTIVE DATE: July 1, 1979.

ADDRESS: National Credit Union Administration, 2025 M Street, N.W., Washington, D.C., 20456.

FOR FURTHER INFORMATION CONTACT: James L. Skiles, Deputy General Counsel, Office of General Counsel, at the above address. Telephone: (202) 632-4870.

SUPPLEMENTARY INFORMATION: On June 5, 1979, this Administration published a final rule, Share Accounts and Share Certificate Accounts (final rule), effective July 1, 1979 (44 FR 32202). Pursuant to the final rule, Federal credit unions are permitted greater flexibility in designing share accounts to meet the needs of their membership. This flexibility is in contrast to the previously existing rule on share accounts which delineated with greater specificity the nature and type of share accounts that could be offered by Federal credit unions. Since the final rule modifies the previous framework within which Federal credit unions were permitted to operate in creating share accounts, new concerns have surfaced in regard to the treatment that must now be accorded share draft accounts.

Under the previous rule (rule in effect until July 1, 1979) if a Federal credit union established a separate account for share draft purposes, that share draft account was required to be identical in every respect to the credit union's regular share account. This requirement did not present undue operational difficulties because the structure of regular share accounts could not be varied. That is, there was only one regular share account and the share draft account was established solely for administrative and accounting purposes. The final rule, however, expands the posture of regular share accounts.

Federal credit unions will now have the latitude to design varying types of accounts that will qualify as regular share accounts. Because of this change, and since share draft accounts must qualify as regular share accounts, this Administration has determined that an interpretive ruling is necessary to clarify the issues raised by the final rule.

Interpretation—IRPS No. 79-2

Section 107(6) of the Federal Credit Union Act (12 U.S.C. 1757(6)) authorizes Federal credit unions to issue shares at varying dividend rates and share certificates at varying dividend rates and maturities. Pursuant to that section, the National Credit Union Administration promulgated, effective January 1, 1978, section 701.35 of its Rules and Regulations, establishing conditions for the issuance of share accounts and share certificate accounts. (12 CFR 701.35). Section 701.35 is now further amended, effective July 1, 1979.

As a result of the amendments to section 701.35, issues have been raised concerning the proper treatment of regular share accounts that are accessed by share drafts. Under the rule prior to July 1, 1979, a share draft account could not vary in structure, dividend rate or method for computing the dividend rate from the regular share account. Section 701.35, as amended, does not require the same result.

Federal credit unions are required to offer at least one type of share account that does not require the holder to maintain a balance greater than the par value of a share, does not require a notice of intent to withdraw, except as may be imposed in accordance with the Federal Credit Union Bylaws, but that must receive a dividend. (12 CFR 701.35(b)(ii)). This type of share account is defined as a "regular share account." (12 CFR 701.35(a)(1)(ii)). By definition, a share draft account is "any regular share account from which the Federal credit union has agreed that shares may be withdrawn by means of a share draft or other order." (12 CFR 701.34(a)(4)). Share draft accounts, therefore, are, by definition, regular share accounts.

Section 701.35 does not restrict the number of regular share accounts that may be offered by Federal credit unions. In fact, the regulatory history of the rule on share accounts supports the proposition that a Federal credit union has considerable latitude in designing the types of accounts best suited for its members. Since more than one regular share account can be offered, a share draft account may be established as a separate regular share account in addition to a regular share account not accessed by a draft. It is emphasized, however, that limitations, such as maximum rate, for example, applicable to all share accounts and the specific requirements of regular share accounts must be met and maintained.

The board of directors of a Federal credit union may, by resolution, establish share accounts with varying dividend rates (12 CFR 701.35(b)). A review of the regulatory history and the rule itself does not suggest that every type of share account must receive the same dividend rate. Accordingly, Federal credit unions are authorized to vary the dividend rate or different regular share accounts, including share draft accounts, provided the rates are established and paid in a nondiscriminatory manner. However, all accounts within a particular class, that is, for example, all share draft accounts, must receive identical treatment.

Lawrence Connell,
Chairman.

June 29, 1979.

[FR Doc. 79-20613 Filed 7-5-79; 8:45 am]
BILLING CODE 7535-01-M

---

12 CFR Part 701

Organization and Operations of Federal Credit Unions; Incorporation by Reference

AGENCY: National Credit Union Administration.

ACTION: Final rule.

SUMMARY: This final rule amends §§ 701.2, 701.14, and 701.15 by repealing the incorporation by reference status of certain manuals. The effect of this action is to change these manuals from documents having the force and effect of regulations to those that are guidelines.

EFFECTIVE DATE: August 3, 1979.

ADDRESS: Comments may be sent to Robert S. Monheit, Senior Attorney, Office of General Counsel, National Credit Union Administration, Room 4202, 2025 M Street, N.W., Washington, D.C. 20456.

FOR FURTHER INFORMATION CONTACT: Robert S. Monheit, Senior Attorney, Office of General Counsel, at the above address. Telephone: (202) 632-4870.

SUPPLEMENTARY INFORMATION: Recognizing the burden and expense involved in the publication of particularly lengthy materials in the Federal Register, the Freedom of Information Act provides that any material "reasonably available to the class of persons affected thereby is deemed published in the Federal Register when incorporated by reference therein . . ." 5 U.S.C. § 552(a)(1). These materials include, amongst other things, substantive rules of general applicability, i.e. regulations. In accordance with this procedure, NCUA had incorporated by reference a number of manuals, with the intent that they have the force and effect of agency regulations. These manuals were listed in 12 CFR 701.2(d) and described in 12 CFR 701.14 and 701.15.

As part of NCUA's plan to review existing regulations to eliminate redundant and unnecessary provisions (See: NCUA's Final Report "In Response to Executive Order 12044: Improving Government Regulations," 44 FR 17954), those manuals incorporated by reference are being reviewed. The aim of this review, as announced in NCUA's first Semi-Annual Agenda (43 FR 58654), is to determine whether the manuals listed should have the force and effect of regulations. This final rule, amending the provisions of 12 CFR 701.2(d), 701.14, and 701.15, represents the completion of the first stage of this review.

NCUA has determined that a number of these manuals contain information which merely repeats the mandatory provisions of statutes and regulations. These provisions are binding upon Federal credit unions without the need to incorporate the entire manual into the regulations. In addition, the review indicated that some provisions could be treated as mere guidelines, without the binding effect of a regulation. Finally, it was determined that some manuals were merely compiled and presented statistical data and other information of a non-binding nature. Therefore, NCUA has decided to repeal the incorporation by reference status of the following manuals:

a. *Handbook for Federal Credit Unions/Board of Directors Manual;*
b. *Supervisory Committee Manual for Federal Credit Unions;*
c. *Credit Manual for Federal Credit Unions;*
d. *Sale and Redemption of U.S. Savings Bonds by Federal Credit Unions;*
e. *NCUA Quarterly;*
f. *Annual Report of Operations/Annual Report of the Federal Credit Union Program;*
g. *Selected Operating Statistics for Federal Credit Unions;*
h. *State Chartered Credit Unions;* and
i. *Accounting Machine Handbook for Federal Credit Unions.*

These manuals will now have the status of guidelines. If a Federal credit union departs from the practices set forth in a number of these manuals, this will not, by itself, constitute a violation of NCUA's rules and regulations. NCUA

will, of course, continue to take enforcement action where there is a violation of law, rule or regulation, or where the practice is found to be unsafe and unsound.

This final rule does not constitute the completion of NCUA's review of the manuals that are incorporated by reference. Still under review are the technical provisions of the *Accounting Manual for Federal Credit Unions* and the *Data Processing Guidelines for Federal Credit Unions*. The review of these two manuals will determine which specific provisions may be treated as guidelines and which provisions require the binding effect of a regulation. For those provisions that need to have a binding effect on Federal credit unions, NCUA is considering either issuing specific regulations setting forth those provisions or re-incorporating these manuals with only the mandatory provisions. Finally, NCUA is considering the repeal of the incorporation by reference status of the manual *Organizing a Federal Credit Union*, pending the completion of a rule on NCUA's chartering policies, which is now under development.

NCUA, for good cause, finds that the procedures prescribed by 5 U.S.C. 553 relating to notice and public procedure are unnecessary and contrary to the public interest because this final rule does not impose any binding substantive requirements. Rather, the rule relieves certain restrictions by changing the status of these manuals from regulations to informational guidelines. The procedures set forth in NCUA's Final Report "In Response to Executive Order 12044: Improving Government Regulations" are found to be unnecessary and contrary to the public interest because of the reasons set forth above and because this rule is a direct result of the plan for reviewing existing regulations announced in Part VI, paragraph 1.a. of the Final Report. The official responsible for this determination is James L. Skiles, Deputy General Counsel.

Accordingly, §§ 701.2(d), 701.14 and 701.15 of the National Credit Union Rules and Regulations are amended as set forth below.

Lawrence Connell,

Chairman.

June 29, 1979.

§ 701.2 [Amended].

1. § 701.2(d) is amended by:

a. deleting subparagraphs (1), (3), (4), (8), (9), (10), (11), and (12);

b. redesignating

(1) subparagraph (2) as subparagraph (1);

(2) subparagraph (5) as subparagraph (2);

(3) subparagraph (6) as subparagraph (3); and

(4) subparagraph (7) as subparagraph (4).

§ 701.14 [Amended].

2. § 701.14 is amended by

a. deleting paragraphs (a), (c), (d), and (h);

b. redesignating

(1) paragraph (b) as paragraph (a);

(2) paragraph (e) as paragraph (b);

(3) paragraph (f) as paragraph (c); and

(4) paragraph (g) as paragraph (d).

§ 701.15 [Deleted and Reserved].

3. § 701.15 is deleted and reserved for future use.

[FR Doc. 79-20778 Filed 7-5-79; 8:45 am]

BILLING CODE 7535-01-M

CIVIL AERONAUTICS BOARD

14 CFR Part 300

[Regulation PR-192A; Docket 34512]

Rules of Conduct in Board Proceedings

Adopted by the Civil Aeronautics Board at its office in Washington, D.C. on June 28, 1979.

AGENCY: Civil Aeronautics Board.

ACTION: Finalization of Interim Rule.

SUMMARY: The Board, on its own initiative, modified its *ex parte* rule to permit Board employees in non-hearing cases to consult with other federal agencies and in certain small community air service cases to consult with any interested persons (PR-192, 44 FR 4655, January 23, 1979). We simultaneously issued a notice of proposed rulemaking to provide an opportunity for public comment (PDR-60, 44 FR 4701, January 23, 1979.) No comments have been received, and the Board has decided to leave in effect the rule as previously amended.

DATES: Adopted: June 28, 1979. Effective: January 18, 1979.

FOR FURTHER INFORMATION CONTACT: Thomas L. Ray, Office of the General Counsel, Civil Aeronautics Board, 1825 Connecticut Avenue, N.W., Washington, D.C. 20428; 202-673-5424.

By the Civil Aeronautics Board.

Phyllis T. Kaylor,

Secretary.

[FR Doc. 79-20942 Filed 7-5-79; 8:45 am]

BILLING CODE 6320-01-M

NATIONAL AERONAUTICS AND SPACE ADMINISTRATION

14 CFR Part 1214

Space Transportation System; Personnel Reliability Program

AGENCY: National Aeronautics and Space Administration.

ACTION: Final Regulation.

SUMMARY: NASA currently does not have a prescribed regulation to establish criteria and procedures for assuring the highest standards of reliability in personnel assigned to mission-critical positions in connection with the Space Transportation System. This regulation is part of an overall program to assure the protection of the Space Transportation System by providing special physical security measures, safety precautions and operational standards for mission-critical positions.

DATE: July 6, 1979.

ADDRESS: Director, Reliability, Quality and Safety, Code MR-4, Office of Space Transportation Systems, National Aeronautics and Space Administration, Washington, D.C. 20546.

FOR FURTHER INFORMATION CONTACT: Haggai Cohen, telephone 202-755-3155.

SUPPLEMENTARY INFORMATION: On March 16, 1979, NASA published proposed regulation (44 FR 16020-16021) to establish criteria and procedures for assuring the highest standards of reliability in personnel assigned to mission-critical positions in connection with the Space Transportation System. Interested parties were given until April 16, 1979, to submit comments or suggestions. Although there were no substantive comments on the proposed regulation, there was one request for additional information which was provided by letter. The proposed regulation is hereby adopted without change and is set forth below.

Robert A. Frosch,

Administrator.

14 CFR Part 1214 is amended by adding a new Subpart 1214.5 reading as follows:

Subpart 1214.5—Space Transportation System Personnel Reliability Program

Sec.

1214.500 Scope.

1214.501 Applicability.

1214.502 Definitions.

1214.503 Policy.

1214.504 Screening requirements.

1214.505 Program implementation.

Authority: The National Aeronautics and Space Act of 1958, as amended, 72 Stat. 426, 42 U.S.C. 2451 *et seq.*

Subpart 1214.5—Space Transportation System Personnel Reliability Program

§ 1214.500 Scope.

This Subpart 1214.5 establishes a program designed to ensure that personnel assigned to mission-critical positions in connection with the Space Transportation System meet established screening requirements. This program supplements the DOD and NASA program requirements for security clearances.

§ 1214.501 Applicability.

(a) This regulation applies to NASA Headquarters and field installations whose personnel are engaged in activities that are critical to the success of Space Transportation missions.

(b) The provisions of the regulation apply to all personnel assigned to mission-critical positions in connection with the Space Transportation System.

(c) This regulation does *not* include flight crew or payload specialists when covered by other NASA Management Instructions which have equivalent screening requirements.

§ 1214.502 Definitions.

(a) *Mission-Critical Position.* Any position requiring physical access to the vehicle, or command capability through the Launch Processing System or the Mission Control Center as well as any other positions wherein the concerned NASA installation determines that faulty, negligent or malicious actions could result in a program contingency.

(b) *Two-Person Concept.* The practice of requiring the presence of two authorized persons, each capable of detecting incorrect or unauthorized procedures, during the performance of tasks or operations vital to the Space Shuttle.

(c) *Medical Authority.* A NASA civil service or contract physician responsible for reviewing medical records, providing results of medical evaluations and interpreting evaluations as they relate to reliable performance of mission-critical duties.

(d) *Program Contingency.* Any program-related failure, accident or incident that significantly delays or jeopardizes the program or a mission, prevents accomplishment of a major mission objective or terminates a mission prematurely.

§ 1214.503 Policy.

(a) The Space Transportation System is a national resource providing a capability to support a wide range of scientific, applications, commercial, defense and international uses. Since it will contribute significantly to ensuring a scientifically, technologically and economically strong and secure nation, the interest of the national security, as well as program reliability, operational and safety considerations require that extraordinary measures be taken to provide for the protection of the system.

(b) Measures to ensure this protection are:

(1) Special physical security provisions,

(2) Two-person concept of operations in connection with selected, most vital pre-launch and post-launch tasks, and

(3) Procedures to ensure that personnel assigned to perform mission-critical duties meet specified screening requirements.

§ 1214.504 Screening requirements.

(a) Only those persons shall be assigned to, employed in, or retained in mission-critical positions who have been determined to be competent and reliable in the performance of their assigned duties pursuant to the screening requirements of this section, and whose assignment, employment or retention is clearly consistent with optimum Space Transportation System safety and security.

(b) Determinations of acceptability for assignments to mission-critical positions shall be made on the basis of the following criteria:

(1) Ability to perform mission-critical duties as evidenced by performance during training, simulations and on the job.

(2) An initial medical evaluation of the individual and as necessary thereafter, but not less than every two years, to ensure health is adequate for reliable performance of mission-critical duties. The medical evaluation by competent medical authority may be made by: (i) Medical history and records which are sufficiently comprehensive and current for the purpose; or (ii) an appropriate medical examination.

(3) Verification of the existence of a current personnel security clearance at the level commensurate with the classification of the information required in the position.

(4) A review of the results of a National Agency Check (including a name check of the FBI fingerprint records) completed within the past five years. When the National Agency Check indicates that a more extensive investigation has been completed, the results of that investigation will also be reviewed.

(5) Local agency checks as appropriate.

§ 1214.505 Program implementation.

(a) Each NASA installation to which this regulation is applicable will identify positions occupied by personnel assigned to mission-critical duties. The number of positions so identified must be the absolute minimum necessary to meet operational requirements. The unnecessary designation of such positions not only increases the costs required to administer the program, but also reduces its total effectiveness.

(b) Each NASA installation to which this regulation is applicable will establish:

(1) A *certification system* acceptable to the Associate Administrator for Space Transportation Systems to ensure that the screening requirements of this instruction are met for designated mission-critical positions. The certification system is to provide for the issuance of a NASA identification for each authorized individual who passes the prescribed requirements; and

(2) A *management review process* to validate the objectivity of individual certification determinations and ensure that reassignments or other personnel actions taken pursuant to this regulation are duly processed under the appropriate personnel policies and procedures applicable to each individual; and

(3) Appropriate procedures for review of certification determinations which shall be provided to affected individuals.

(c) The launch centers, in conjunction with other involved NASA centers, contractors or agencies, will identify the vital pre-launch and post-launch tasks where the two-person concept of operations should be used.

(d) The full intent of the provisions of this regulation will be incorporated in any contract under which contractor employees will be assigned to mission-critical positions. An appropriate procurement provision is being separately prepared for this area.

(e) NASA Headquarters (OSTS) will periodically review the program to assure reasonable uniformity in implementation procedures and the identification of mission-critical positions.

[FR Doc. 79-20946 Filed 7-5-79; 8:45 am]
BILLING CODE 7510-01-M

SECURITIES AND EXCHANGE COMMISSION

17 CFR Part 249

[Release No. 34-15979]

Requests for Confidential Treatment of Information Filed by Institutional Investment Managers

AGENCY: Securites and Exchange Commission.

ACTION: Amendment of instructions to form.

SUMMARY: The Commission announces amendment of a form governing the reporting requirements of institutional investment managers exercising investment discretion over accounts having in the aggregate more than $100,000,000 in exchange-traded or NASDAQ-quoted equity securities. Only the instruction in the form pertaining to requests for confidential treatment is being amended. The amendment is intended to clarify the procedural and substantive criteria such requests must satisfy before they may be granted. This action is being taken because a review of the requests for confidential treatment received so far suggests that there is uncertainty on the part of many institutional investment managers about the applicable standards.

EFFECTIVE DATE: June 28, 1979.

FOR FURTHER INFORMATION CONTACT: Lawrence R. Bardfeld, Esq. (202-755-0212), Division of Investment Management, Securities and Exchange Commission, 500 North Capitol Street, Washington, D.C. 20549.

SUPPLEMENTARY INFORMATION: On June 15, 1978, the Securities and Exchange Commission (the "Commission") announced the adoption of Securities Exchange Act Rule 13f-1 [17 CFR 240.13f-1] and related Form 13F [17 CFR 249.325], pursuant to Section 13(f) of the Securities Exchange Act of 1934 [15 U.S.C. 78a et seq. as amended by Pub. L. No. 94-29 (June 4, 1975)] (the "Exchange Act").[1] Under the rule, as amended effective February 5, 1979,[2] an institutional investment manager exercising investment discretion (as defined in Section 3(a)(35) of the Exchange Act [15 U.S.C. 78(c)(a)(35)]) with respect to accounts having $100,000,000 or more in exchange-traded or NASDAQ-quoted equity securities on the last trading day of any of the twelve months of a calendar year must file five copies of Form 13F with the Commission and, if a bank, with the appropriate agency. The form must be filed within 45 days after the last day of such calendar year and within 45 days after the last day of the first three calendar quarters of the subsequent year. The form requires the reporting of the name of the issuer, and the title of class, CUSIP number, number of shares or principal amount in the case of convertible debt, and aggregate fair market value of each such equity security held. The form also requires information concerning the nature of investment discretion and voting authority possessed. The rule implemented the institutional disclosure program mandated by Congress in Section 13(f) of the Exchange Act.

Section 13(f)(3) of the Exchange Act requires that in general the Commission make the information in reports on Form 13F promptly available to the public, but further provides that:

> The Commission, as it determines to be necessary or appropriate in the public interest or for the protection of investors, may delay or prevent public disclosure of any such information in accordance with section 552 of title 5, United States Code [the Freedom of Information Act].
> Notwithstanding the preceding sentence, any such information identifying the securities held by the account of a natural person or an estate or trust (other than a business trust or investment company) shall not be disclosed to the public.

General Instruction D of Form 13F provides:

> D. *Confidentiality.* Pursuant to section 13(f)(3) of the Act [15 U.S.C. 78m(f)(3)], the Commission shall not disclose to the public information identifying the securities held by the account of a natural person or an estate or trust (other than a business trust or investment company). Therefore, a Manager filing a report on Form 13F which includes such information shall submit a separate statement clearly identifying that information with reference to the appropriate Item and name of issuer, title of class and CUSIP number, including suffix and check digit.
>
> In addition, the Commission may, as it determines necessary or appropriate in the public interest, delay or prevent public disclosure of any information filed under section 13(f) of the Act, in accordance with section 552 of Title 5, United States Code [5 U.S.C. 552]. Requests for delay or prevention of public disclosure should identify clearly the information for which the request is made, as well as the provision(s) of section 552 of Title 5, United States Code, upon which the request is based and should include a statement setting forth the request and the reasons for the applicability of such provision(s).

In addition to these general instructions, Rule 24b-2 under the Exchange Act [17 CFR 240.24b-2] establishes procedures which apply to any person who requests confidential treatment of information filed with the Commission under the Exchange Act. However, a review of the requests for confidential treatment received so far suggests that the absence of a specific reference to Rule 24b-2 in General Instruction D may have created an ambiguity as to the requirements applicable to requests for confidential treatment of information contained in Form 13F. Some of the requests received for confidential treatment, especially those seeking confidential treatment "in accordance with the Freedom of Information Act," were broad in scope and conclusory in nature. Since the purpose of Section 13(f) is to require extensive disclosure of the investment activities of institutions, confidential treatment can be granted only to managers who can make an affirmative showing that they satisfy the standards of Section 13(f)(3). In the case of information about natural persons, estates, or trusts, meeting the standard requires only an adequate showing that such information would in fact be revealed. Other types of information may not be granted confidential treatment unless the manager demonstrates that an exemption from the Freedom of Information Act is available, and the Commission should exercise its discretion to assert such exemption. Moreover, any grant of confidential treatment would have to be limited in scope and duration to what the manager had shown a need for. Accordingly, managers seeking confidential treatment must provide sufficient factual information to enable the Commission to make an informed independent decision.

To clarify the requirements applicable to requests for confidential treatment, and to assist managers in determining what points to address, the Commission is amending General Instruction D to Form 13F. The amendment makes clear that requests for confidential treatment must be made in accordance with Rule 24b-2 under the Exchange Act and sets forth factors which should, among others, be addressed by persons making certain types of requests for confidential treatment.

Consistent with Section 23(a)(2) of the Exchange Act [15 U.S.C. 78w(a)(2)], the Commission has determined that this action would have no significant effect on competition since it is intended only to provide guidance on how to comply with existing legal standards. As required by Section 13(f)(4) of the Exchange Act the Commission has determined that this action is necessary or appropriate in the public interest and

[1] Exchange Act Release No. 14852 dated June 15, 1978 [43 FR 26700, June 22, 1978].

[2] Exchange Act Release No. 15461 dated January 5, 1979 [44 FR 3033, January 15, 1979].

for the protection of investors, and to maintain fair and orderly markets.

Authority; Effective Date; Amendment.

The Commission hereby amends Form 13F, effective immediately, pursuant to the authority set forth in Sections 3(b), 13(f) and 23 of the Exchange Act [15 U.S.C. 78c(b), 78m(f) and 78w]. The Commission finds that the changes in the form are technical in nature and do no more than clarify existing requirements, so that notice and public procedure are not necessary and the amendments may be made effective immediately [5 U.S.C. 553(b), (d)].

Accordingly, General Instruction D of the form prescribed in Section 249.325 of Title 17 of the Code of Federal Regulations is amended to provide as follows:

§ 249.325 Form 13F, report of institutional investment manager pursuant to Section 13(f) of the Securities Exchange Act of 1934.

* * * * *

General Instructions

* * * * *

D. Pursuant to section 13(f)(3) of the Act [15 U.S.C. 78m(f)(3)], the Commission (1) may prevent or delay public disclosure of information on this form in accordance with section 552 of Title 5 United States Code, the Freedom of Information Act [5 U.S.C. 552], and (2) shall not disclose information on this form identifying securities held by the account of a natural person or an estate or trust (other than a business trust or investment company). Requests for confidential treatment of information on this form should be made in accordance with Rule 24b-2 under the Exchange Act [17 CFR 240.24b-2], except that requests seeking to prevent disclosure of information identifying the securities held by the account of a natural person or an estate or trust (other than a business trust or investment company) need not, in complying with paragraph b(2)(ii) of Rule 24b-2, include an analysis of any applicable exemptions from disclosure under the Commission's rules and regulations adopted under the Freedom of Information Act [17 CFR 200.80].

A manager requesting confidential treatment in accordance with the Freedom of Information Act must provide enough factual support for its request to enable the Commission to make an informed judgment as to the merits of the request. The request should address all pertinent factors, including such of the following as may be relevant:

1. If confidential treatment is requested as to more than one holding of securities, discuss each holding separately unless class or classes of holdings can be identified as to which the nature of the factual circumstances and the legal analysis are substantially the same;

2. If a request for confidential treatment is based upon a claim that the subject information is confidential commercial or financial information:

a. Describe the investment strategy being followed with respect to the relevant securities holdings, including the extent of any program of acquisition and disposition (note that the term "investment strategy," as used in this instruction, also includes activities such as risk arbitrage and block positioning);

b. Explain why public disclosure of the securities holdings would, in fact, be likely to reveal the investment strategy; consider this matter in light of the specific reporting requirements of Form 13F (e.g., securities holdings are reported only quarterly and may be aggregated in many cases);

c. Demonstrate that such revelation of an investment strategy would be premature; indicate whether the manager was engaged in a program of acquisition or disposition of the security both at the end of the quarter and at the time of the filing; address whether the existence of such a program may otherwise be known to the public; and

d. Demonstrate that failure to grant the request for confidential treatment would be likely to cause substantial harm to the manager's competitive position; show what use of competitors could make of the information and how harm to the manager could ensue.

3. If the Commission grants a request for confidential treatment, it may delete details which would identify the manager and use the information in tabulations required by Section 13(f)(3) absent separate showing that such use of information could be harmful.

By the Commission.

Dated: June 28, 1979.

George A. Fitzsimmons,

Secretary.

[FR Doc. 79-20688 Filed 7-5-79; 8:45 am]

BILLING CODE 8010-01-M

DEPARTMENT OF HEALTH, EDUCATION, AND WELFARE

Food and Drug Administration

21 CFR Parts 522 and 558

[Docket No. 76N-0002]

Diethylstilbestrol (DES) in Edible Tissues of Cattle and Sheep; Revocations

AGENCY: Food and Drug Administration.

ACTION: Final Rule.

SUMMARY: The Food and Drug Administration (FDA) is revoking the animal drug regulations that provide information about new animal drug applications (NADA's) for the use of DES in cattle and sheep as an additive to animal feed and as a subcutaneous implant. This action is based on the withdrawal of approval of NADA's following an evidentiary hearing. Elsewhere in this issue of the Federal Register, FDA announces withdrawal of the NADA's.

DATES: This action is effective with respect to the manufacture and shipment of DES animal drugs on July 13, 1979; it is effective with respect to the use of DES animal drugs and the manufacture, shipment, and use of feed containing DES on July 20, 1979; it will not be made effective with respect to the edible products of animals treated with DES solely before the effective date for use of DES animal drugs and DES-treated animal feeds.

FOR FURTHER INFORMATION CONTACT: Constantine Zervos, Scientific Liaison and Intelligence Staff (HFY-31), Food and Drug Administration, Department of Health, Education, and Welfare, 5600 Fishers Lane, Rockville, MD 20857, 301-443-4490.

SUPPLEMENTARY INFORMATION: Elsewhere in this issue of the Federal Register, FDA announces the withdrawal, after an evidentiary hearing, of the approval of NADA's 10421, 10964, 11295, 11485, 12553, 15274, 31448, 34916, 44344, 45981, and 45982. These NADA's are for DES implants and liquid and dry feed premixes for use in cattle and sheep.

21 CFR 522.640 and 558.225 provide information concerning the NADA's whose approval has been withdrawn. FDA is at this time revoking those regulations, and their cross-references, pursuant to 21 U.S.C. 360b(i).

§ 522.640 [Revoked]

§ 558.76 [Amended]

§ 558.78 [Amended]

§ 558.225 [Revoked]

Therefore, under the Federal Food, Drug, and Cosmetic Act (sec. 512, 82 Stat. 343-351 (21 U.S.C. 360b)) and under authority delegated to the Commissioner of Food and Drugs (21 CFR 5.1), Chapter I of Title 21 of the Code of Federal Regulations is amended in Part 522 by revoking § 522.640 *Diethylstilbestrol;* and in Part 558 by deleting paragraph (e)(3)(v) in § 558.76 *Bacitracin methylene disalicylate;* by deleting paragraph (e)(3)(iv) in § 558.78 *Bacitracin, zinc;* and by revoking § 558.225 *Diethylstilbestrol.*

EFFECTIVE DATE: This rule is effective with respect to the manufacture and shipment of DES animal drugs on July 13, 1979; it is effective with respect to the use of DES animal drugs and the manufacture, shipment, and use of feed containing DES on July 20, 1979; it will not be made effective with respect to the

edible products of animals treated with DES solely before the effective date for use of DES animal drugs and DES-treated animal feeds.

(Sec. 512, 82 Stat. 343-351 (21 U.S.C. 360b).)

Dated: June 29, 1979.

Donald Kennedy,

Commissioner of Food and Drugs.

[FR Doc. 79-20777 Filed 7-2-79; 11:45 am].

BILLING CODE 4110-03-M

---

21 CFR Part 556

[Docket No. 76N-0002]

Tolerances for Residues of New Animal Drugs in Food; Diethylstilbestrol (DES) in Edible Tissues of Cattle and Sheep; Revocation of Test Methods Regulation

AGENCY: Food and Drug Administration.

ACTION: Final rule.

SUMMARY: The Food and Drug Administration (FDA) is revoking the animal drug regulation that sets forth the methods of analysis approved for the detection of residues of DES in the edible tissues of cattle and sheep treated with DES.

DATES: This action is effective with respect to the manufacture and shipment of DES animal drugs on July 13, 1979; it is effective with respect to the use of DES animal drugs and the manufacture, shipment, and use of feed containing DES on July 20, 1979; it will not be made effective with respect to the edible products of animals treated with DES solely before the effective date for use of DES animal drugs and DES-treated animal feeds.

FOR FURTHER INFORMATION CONTACT: Constantine Zervos, Scientific Liaison and Intelligence Staff (HFY-31), Food and Drug Administration, Department of Health, Education, and Welfare, 5600 Fishers Lane, Rockville, MD 20857, 301-443-4490.

SUPPLEMENTARY INFORMATION: FDA is revoking 21 CFR 556.190, which identifies the mouse uterine/paper chromatography method as the method of examination prescribed for the quantitative and qualitative identification of DES in the edible products of beef cattle and sheep. New animal drug applications (NADA's) have been approved by FDA for the use of DES in cattle and sheep as a feed additive (see 21 CFR 558.225) and as a subcutaneous implant (see 21 CFR 522.640). By order signed this date, the FDA is withdrawing approval of all NADA's for these products. Notice of that order, and final rule revoking 21 CFR 522.640 and 558.225, appears elsewhere in this issue of the Federal Register.

The statutory provision for approval (and withdrawal of approval) of NADA's contains a clause (the "Delaney Clause") that prohibits the approval of any animal drug that induces cancer when ingested by man or animal, 21 U.S.C. 360b(d)(1)(H). DES has been shown to be a carcinogen in animals and has been associated with carcinogenesis in humans.

FDA has previously considered the NADA's for DES to be approvable, despite the prohibition of the Delaney Clause, on the basis of a statutory exception to that clause. The exception (21 U.S.C. 360b(d)(1)(H)) states that the Delaney Clause:

> shall not apply with respect to [a drug that has been shown to cause cancer] if the [Commissioner] finds that, under the conditions of use specified in proposed labeling and reasonably certain to be followed in practice (i) * * * (ii) no residue of such drug will be found (by methods of examination prescribed or approved by the [Commissioner] by regulations, which regulations shall not be subject to subsections (c), (d), and (h) [of this section]), in any edible portion of such animals after slaughter or in any food yielded by or derived from the living animals; * * *

This provision has become known as the "DES exception" to the Delaney Clause. The regulation being revoked by this order sets forth the "methods of examination prescribed or approved" by the Commissioner of Food and Drugs by regulations for detecting DES residues in the edible products of cattle and sheep.

FDA proposed to revoke § 556.190 by notice in the Federal Register of March 27, 1974 (39 FR 11299). Comments were solicited on that proposal. In the Federal Register of January 12, 1976 (41 FR 1804), FDA responded to the comments received. In the same document, FDA gave notice of opportunity for hearing on a proposal to withdraw approval of the NADA's for DES. That document stated at 41 FR 1806 that:

> The Commissioner intends to revoke these methods at the time of final action based upon this notice of opportunity for hearing. * * * If a hearing is held, the currently approved method will be revoked, and any replacement method(s) demonstrated to be adequate will be designated at the time the Commissioner issues a final order based upon the hearing record and the decision of the Administrative Law Judge.

The hearing on the proposed withdrawal of approval of the DES NADA's has been held. The agency's decision based on the hearing record and on the Administrative Law Judge's initial decision is being issued today.

The agency's decision withdraws approval of the DES NADA's on two independent grounds. First, approval is withdrawn based upon this action revoking the approved analytical method for detecting DES residues. When there is no approved analytical method for a carcinogen, the DES exception does not exempt the drug in question from the Delaney Clause. The Delaney Clause, thus, requires withdrawal of approval of the NADA's involved. Second, the decision concludes, on the basis of new evidence evaluated together with existing evidence, that DES has not been shown to be safe for its intended uses as an animal drug. The agency's decision will be published in the Federal Register in the near future.

The issues whether the approved analytical method (the mouse uterine/paper chromatography method) or any other analytical methods are acceptable for use with DES were addressed in the administrative hearing. As explained in the agency's decision evaluating the record at that hearing, nothing in that record demonstrates that the agency's decision in 1976 to revoke the approved method was incorrect. In addition, no other analytical method was shown to be acceptable for DES.

In summary, the decision's findings are as follows: Insufficient testing has been performed to determine which of the components of DES residues are of toxicological interest and must be measured by an analytical method for DES. The mouse uterine/paper chromatography method does not detect DES residues at a level at which those residues have been shown not to present a significant risk of cancer. In addition, the approved method has not been shown to be adequately specific or practical for regulatory purposes.

The mouse uterine/paper chromatography method, though it has been approved since 1963, is so impractical for regulatory purposes that the Department of Agriculture does not use it in the only ongoing program for surveying animal tissues for DES residues. The gas chromatography/mass spectrometry method, which the Department of Agriculture uses, does not qualify as an acceptable alternative method for DES. No method can be considered acceptable without knowledge about what residues of DES are of toxicological concern and thus must be detected by the method. In any case, the gas chromatography/mass spectrometry method does not detect DES residues at a level at which those

residues have been shown not to present a significant risk of cancer. In addition, this method lacks sufficient specificity.

The response to the comments submitted on the March 1974 proposal (see the January 12, 1976 Federal Register) constitutes the statement of basis and purpose required for issuance of an order pursuant to the Administrative Procedure Act, 5 U.S.C. 553(c). As noted, nothing in the record of the administrative hearing on the withdrawal of approval of NADA's for DES provides a basis for changing the conclusions set forth in the 1976 document.

The Administrative Procedure Act requires that publication of a substantive rule precede the effective date of that rule by 30 days, with certain exceptions, 5 U.S.C. 553(d). It is not entirely clear that this provision applies to a rule's revocation as well as to that rule's promulgation. In any case, the FDA finds that one of the exceptions to this requirement applies here. The agency finds good cause for failure to provide a 30-day delayed effective date for the revocation of these rules (see 5 U.S.C. 553(d)(3)).

As noted above, the agency is revoking the DES NADA's on two independent grounds. One of those, the ground that new evidence has shown DES not to be shown to be safe, does not depend upon the revocation of the analytical methods regulation. The decision to withdraw approval of the DES NADA's has been made effective on July 13, 1979 with respect to the manufacture and shipment of DES animal drugs. The decision has been made effective on July 20, 1979 with respect to the use of DES animal drugs and the manufacture, shipment, and use of feed containing DES. (This decision will not be made effective with respect to the edible products of animals treated with DES solely before the effective date for use of DES animal drugs and DES-treated animal feeds.) Because use of DES as an animal drug is prohibited upon those dates, no one is harmed by making revocation of the analytical methods regulation, which is applicable only to the DES NADA's, effective on the same dates. Indeed, early effective dates for this order can be expected to simplify any judicial review of the decision to withdraw approval of the NADA's.

Affected persons have, in any case, had a long period of notice of the FDA's intended action (since January 12, 1976). There is, therefore, no valid argument that affected persons must be granted more time to arrange compliance with this action.

FDA regulations do, however, grant affected persons a right to seek administrative stay of any action, including a final decision after an administrative hearing, 21 CFR 10.35 and 12.139. Should any person seek a stay of the agency's decision following the administrative hearing on withdrawal of the NADA's for DES, that person may also seek a stay of the revocation of these regulations as part of the same petition.

On the basis of the comments received in response to the proposal to revoke the detection methods for DES and the data cited in the March 1974 proposal, the FDA is implementing the decision announced on January 12, 1976.

Therefore, under the Federal Food, Drug, and Cosmetic Act (sec. 512, 701(a), 52 Stat. 1055, 82 Stat. 343–351 (21 U.S.C. 360b, 371(a))) and under authority delegated to the Commissioner (21 CFR 5.1), Part 556 is amended by revoking § 556.190 *Diethylstilbestrol.*

Effective date: This rule is effective with respect to the manufacture and shipment of DES animal drugs on July 13, 1979; it is effective with respect to the use of DES animal drugs and the manufacture, shipment, and use of feed containing DES on July 20, 1979. It will not be made effective with respect to the edible products of animals treated with DES solely before the effective date for use of DES animal drugs and DES-treated animal feeds.

(Secs. 512, 701(a), 52 Stat. 1055, 82 Stat. 343–351 (21 U.S.C. 360b, 371(a)).)

Dated: June 29, 1979.

Donald Kennedy,

Commissioner of Food and Drugs.

[FR Doc. 79-20776 Filed 7-2-79; 11:45 am]

BILLING CODE 4110-03-M

DEPARTMENT OF THE TREASURY

Bureau of Alcohol, Tobacco, and Firearms

27 CFR Part 201

[T.D. ATF-59]

Marks on Portable Containers of Tax-Free Alcohol

AGENCY: Bureau of Alcohol, Tobacco and Firearms.

ACTION: Final rule (Treasury decision).

SUMMARY: This document deletes the requirement for distilled spirits plant proprietors to mark the purpose of withdrawal on the Government side of each package or case of alcohol withdrawn free of tax. The specific changes made by this document are discussed below under "Supplementary Information."

EFFECTIVE DATE: August 6, 1979.

FOR FURTHER INFORMATION CONTACT: Edward J. Sheehan, Research and Regulations Branch, Bureau of Alcohol, Tobacco and Firearms, Washington, DC 20226, (202-566-7626).

SUPPLEMENTARY INFORMATION: This final rule is being issued in keeping with ATF's policy of implementing regulations that will pose the least administrative burden to industry members while providing the most protection to Federal revenues and to consumers. The current regulations in 27 CFR 201.524(c), 201.525(b), 201.527(a) and 201.529(a) require packages or cases of tax-free alcohol to be marked with (1) the permit number of the tax-free alcohol user and (2) the purpose of withdrawal, as, for example, "Hospital Use," "Scientific Purposes," "Use of U.S." Based on an internal review of regulations, the Bureau has come to the conclusion that the permit number of the tax-free alcohol user on the Government head of a package or side of the case is sufficient information to indicate the purpose of withdrawal. Eliminating the requirement for purpose of withdrawal should decrease the costs for producers packaging tax-free alcohol. Therefore, the requirement for distilled spirits plant proprietors to mark the purpose of withdrawal on the Government side of each package or case of alcohol withdrawn free of tax is deleted.

Drafting Information

The principal author of this document is Edward J. Sheehan of the Research and Regulations Branch, Bureau of Alcohol, Tobacco and Firearms. However, personnel from other offices of the Bureau and from the Treasury Department participated in developing the document, both on matters of substance and style.

Issuance

Because this Treasury decision is liberalizing, operates to the benefit of the regulated industry and requires no public initiative, it is found to be unnecessary to issue this Treasury decision with notice and public procedure under 5 U.S.C. 553(b).

Except as otherwise noted, these regulations are issued under the authority contained in 26 U.S.C. 7805 (68A Stat. 917).

Accordingly, 27 CFR Part 201 is amended as follows:

1. Section 201.524 is amended by revising paragraph (c) and the last paragraph of the section to read as follows:

§ 201.524 Additional marks on portable containers.

* * * * *

(c) Tax-free alcohol shall be marked to show the number of the permit of the tax-free user and the date of withdrawal.

The proprietor may show on the Government head or side other information such as brand or trade name; caution notices, and other material required by Federal, State or local law or regulations; wine or proof gallons; and plant control data. However, marks or attachments shall not conceal, obscure, interfere with or conflict with the markings required by this subpart.

(Sec. 201, Pub. L. 85-859, 72 Stat. 1360, as amended (26 U.S.C. 5206).)

2. Section 201.525 is amended by revising paragraph (b) and reads as follows:

§ 201.525 Marks on bulk conveyances.

* * * * *

(b) Shipments of spirits (including denatured spirits) for tax-free use shall bear a label showing the name, location (city or town and State) of both the consignor and the consignee, the plant number of the consignor, the permit number of the consignee, the date of shipment, the quantity in proof gallons (wine gallons for denatured spirits), and the formula number for denatured spirits.

* * * * *

(Sec. 201, Pub. L. 85-859, 72 Stat. 1360, as amended (26 U.S.C. 5206).)

3. Section 201.527 is amended by revising the last sentence in paragraph (a) and reads as follows:

§ 201.527 Marks on cases of bottled-in-bond spirits.

(a) * * * Cases withdrawn tax-free shall be marked to show the number of the permit of the tax-free user.

* * * * *

4. Section 201.529 is amended by revising the last sentence in paragraph (a) and reads as follows:

§ 201.529 Cases of bottled alcohol.

(a) * * * Cases withdrawn tax-free shall be marked to show the number of the permit of the tax-free user.

* * * * *

(Sec. 201, Pub. L. 85-859, 72 Stat. 1360, as amended, 1369, as amended (26 U.S.C. 5206, 5235).)

Signed: June 12, 1979.

G. R. Dickerson,

Director.

Approved: June 19, 1979.

Richard J. Davis,

Assistant Secretary, Enforcement and Operations.

[FR Doc. 79-20908 Filed 7-5-79; 8:45 am]

BILLING CODE 4810-31-M

DEPARTMENT OF DEFENSE

Defense Civil Preparedness Agency

32 CFR Part 1810

Civil Defense Identification for Federal Employees, Reservists and Non Federal Support Personnel

AGENCY: Defense Civil Preparedness Agency.

ACTION: Deletion of Regulation.

SUMMARY: On February 8, 1978, DCPA proposed to delete the above regulation from Chapter XVIII of Title 32. This proposal was published in the Federal Register at 43 CFR 5389. The regulation deals with the issuance by a number of Federal agencies of identification cards which use the official civil defense insigne. Comments were received, and have been evaluated in the light of future developments. It is now decided to delete these regulations.

EFFECTIVE DATE: June 30, 1979.

FOR FURTHER INFORMATION CONTACT: William L. Harding, Acting General Counsel, DCPA, Washington, D.C. 20301, 202-695-4361.

SUPPLEMENTARY INFORMATION: DCPA Regulation 32 CFR Part 1810, entitled as above, sets forth DCPA regulations for the issuance by Federal agencies of an identity card for use in case of an attack upon the United States by the classes of individuals mentioned. The card uses the official civil defense insigne which is regulated by 32 CFR Part 1806. DCPA is now proposed to be merged into a new agency, The Federal Emergency Management Agency which has a broad role in coordinating civil defense and civil emergency planning, management, mitigation, and assistance functions. This includes any accidental, natural, man caused or wartime emergencies. Thus the SF 138 will shortly be made obsolete.

The Federal Register document did produce a number of responses (5 Federal Agencies, (out of 46 allowed to use the card) 2 State offices, and 74 local offices). Most of the local offices did not object to the deletion of the regulation. State offices indicated use of the card (which use is not authorized) and indicated a desire for a new card.

Those Federal Agencies commenting indicated a desire to continue the system, and in any event that a new system be adopted. This latter, of course, would now be a matter for the new Federal Emergency Management Agency.

However, even though there are a number of reasons for continuance of the system, these are outweighed by the reasons for discontinuance set out in 43 FR 3389 (basically that controls over issuance have not been administered properly, with a subsequent loss of information on actual control). This requires a new card to regain proper controls over issuance. Further, the new mission of FEMA would indicate the card should cover a broader scope than it does now.

A proposed notice was set out in the proposal for deleting this regulation. That notice has been made final and published elsewhere in this issue (see the table of contents).

PART 1810 [DELETED]

Accordingly, 32 CFR Part 1810 is deleted effective June 30, 1979.

Clifford E. McLain,

Acting Director.

(Secs. 201, 204, 401 Federal Civil Defense Act of 1950 50 U.S.C. App 2281, 2284, 2253; Executive Order 10952 26 F.R. 6577.)

[FR Doc. 79-20773 Filed 7-5-79; 8:45 am]

BILLING CODE 3810-01-M

ENVIRONMENTAL PROTECTION AGENCY

40 CFR Part 80

[FRL 1252-7]

Rules for Assessment of Civil Penalties; Final Rule of Procedure

AGENCY: Environmental Protection Agency.

ACTION: Final Rule of Procedure.

SUMMARY: The Administrator has delegated authority to bring enforcement actions for violations of the unleaded gasoline regulations to the Assistant Administrator for Enforcement. Pending promulgation of consolidated rules of practice governing the administrative assessment of civil penalties, the rules for assessment of civil penalties under the unleaded gasoline regulations and other fuels regulations are being modified to clarify that the Assistant Administrator for Enforcement is an

appropriate complainant for violations under the fuels regulations.

EFFECTIVE DATE: July 6, 1979.

FOR FURTHER INFORMATION CONTACT: Robert A. Weissman, Attorney, Mobile Source Enforcement Division, at (202) 755-2816.

SUPPLEMENTARY INFORMATION: On August 29, 1975, 40 FR 39962, the Environmental Protection Agency published Rules for Assessment of Civil Penalties, codified at 40 CFR 80.301 *et seq.*, establishing procedures for penalty assessment pursuant to section 211(d) of the Clean Air Act. Consistent with authority at that time delegated to the Regional Administrators the procedural regulations envisioned regional enforcement, with complaints for violations issued by regional personnel.

On July 31, 1978, EPA Delegation No. 7-19 (*Enforcement of Unleaded Gasoline Regulations*) was changed to authorize concurrent enforcement authority for the Assistant Administrator for Enforcement and the Regional Administrators. This was done in concert with certain organizational changes which were designed to give EPA headquarters a larger role in the enforcement of the unleaded gasoline regulations.

In accordance with the revised delegation, EPA's proposed Consolidated Rules of Practice Governing the Administrative Assessment of Civil Penalties and the Revocation or Suspension of Permits (43 FR 34738, August 4, 1978) specifically provided for the complainant to be the Assistant Administrator for Enforcement or his delegate and for assignment of the presiding officer by the Administrator. Although it is expected that these rules will be promulgated in final form shortly, it is important that headquarters enforcement of the unleaded gasoline regulations begin without further delay. Therefore this document revises the current procedural rule, consistent with Delegation No. 7-19 and the proposed rules mentioned above, to provide for assessment of civil penalties in the case of headquarters enforcement.

This action revises a rule of procedure of the agency and does not affect the substantive rights of any possible respondent. Accordingly, notice and public procedure thereon are not required by 5 U.S.C. 553 or 42 U.S.C. 7607(d), and good cause for making the revisions effective immediately is unnecessary.

Dated: July 2, 1979.

Barbara Blum,

Acting Administrator.

40 CFR Part 80 is amended as follows:

1. In § 80.303, by adding new paragraphs (t) and (u) to read as follows:

§80.303 Definitions.

* * * * *

(t) The term "Judicial Officer" means an officer or employee of the Agency duly authorized by the Administrator to serve as the Judicial Officer as provided in these rules of practice.

(u) The term "Hearing Clerk" means an individual duly authorized by the Administrator to serve as hearing clerk for the Agency.

2. By amending the heading of § 80.304 and adding a new paragraph (f) to read as follows:

§80.304 Powers and duties of the Administrator, the Regional Administrator, Judicial Officer, Regional Judicial Officer, and the Presiding Officer; disqualification.

* * * * *

(f) Assistant Administrator for Enforcement. Notwithstanding other sections of these rules, the Assistant Administrator for Enforcement or his delegate may issue a complaint on behalf of the Agency to persons alleged to be in violation of the Act, and the Assistant Administrator for Enforcement or his delegate is then the complainant for purposes of these rules. When the complainant is the Assistant Administrator for Enforcement or his delegate,

(1) All documents shall be filed with the EPA Hearing Clerk,

(2) The Administrator shall assign the Presiding Officer or request that the Chief Administrative Law Judge assign an Administrative Law Judge as Presiding Officer,

(3) The Administrator or Judicial Officer shall rule upon all motions filed prior to the filing of an answer to the complaint, and

(4) All other powers and duties of the Regional Administrator or Regional Judicial Officer shall be exercised by the Administrator or Judicial Officer.

(Sections 211 and 301 of the Clean Air Act, as amended, 42 U.S.C. 7545, 7602).

[FR Doc. 79-20937 Filed 7-5-79; 8:45 am]

BILLING CODE 6560-01-M

40 CFR Part 434

[FRL 1256-2]

Coal Mining Point Source Category: Standards of Performance for New Sources and Effluent Limitations Guidelines for Existing Sources

AGENCY: Environmental Protection Agency.

ACTION: Temporary Suspension of Rule.

SUMMARY: To the extent described in this notice, EPA hereby suspends the catastrophic rainfall exemptions to performance standards for new sources of water pollution in the coal mining industry. 40 CFR 434.25(b), 434.35(b) and 434.45(b). EPA also suspends the catastrophic rainfall exemption to effluent limitations guidelines for existing sources in this industry. 40 CFR 434.22(c), 434.32(b) and 434.42(b). This suspension will remain effective until November 2, 1979.

EFFECTIVE DATE: This suspension will apply to national pollution discharge elimination permits for new and existing sources made final after July 6, 1979, and before the agency repromulgates applicable storm exemption provisions.

ADDRESS: Send comments to Effluent Guidelines Division (WH-552), Environmental Protection Agency, 401 M St., S.W., Washington, D.C. 20460.

FOR FURTHER INFORMATION CONTACT: William Telliard, Effluent Guidelines Division (WH-552), Environmental Protection Agency, 401 M Street, S.W., Washington, D.C. 20460. (202) 426-2726.

SUPPLEMENTARY INFORMATION: On April 26, 1977, EPA promulgated final regulations establishing effluent limitations guidelines based on best practicable control technology currently available (BPT) for existing sources in the coal mining point source category. 42 FR 21380. These regulations provided an exemption for catastrophic precipitation events that overwhelm properly designed and maintained treatment facilities. That exemption stated:

> Any untreated overflow, increase in volume of a point source discharge, or discharge from a by-pass system from facilities designed, constructed, and maintained to contain or treat the discharges from the facilities and areas covered by this subpart which would result from a 10-year 24-hour precipitation event, shall not be subject to [the effluent limitations otherwise applicable to such a facility].

On January 12, 1979, EPA promulgated standards of performance for new sources (NSPS) within the coal mining category based on application of the best available demonstrated control

technology. 44 FR 2586. These regulations provide an exemption for catastrophic precipitation events which states:

Upon satisfactory demonstration by the discharger, any overflow, increase in volume of a discharge, or discharge from a by-pass system, resulting from a 10 year/24 hour or larger precipitation event or from a snow melt of equivalent volume, from facilities designed, constructed, and maintained to contain or treat the volume of water which would result from a 10 year/24 hour precipitation event, shall not be subject to [the otherwise applicable performance standards].

On April 2, 1979, EPA amended the BPT catastrophic storm exemption, making it identical to the exemption provided in the NSP regulations. 44 FR 19193. This amendment was made effective as of May 2, 1979. As the preamble to the BPT amendment states, EPA adopted the storm provisions, as presently written, in order to make its regulations consistent with regulations promulgated by the Department of Interior (DOI) pursuant to the Surface Mining Control and Reclamation Act of 1977, Pub. L. 95-87. The current storm provisions make it explicit that the discharger carries the burden of demonstrating that the exemption is justified. Further, the exemptions are tied to a demonstration that an actual catastrophic event occurred, rather than that the treatment facility merely experienced an overflow, by-pass or increase in discharge. 44 FR at 19194.

After EPA promulgated the current storm provisions, the agency received substantial additional criticism concerning their substance and the procedures which the agency followed in adopting them. Accordingly, EPA has determined that, in order to ensure procedural fairness and the development of a fully informed rulemaking record under the Clean Water Act, it is appropriate to temporarily suspend all catastrophic rainfall exemptions for both BPT and NSPS regulations and to solicit further comments from the public, with the following proviso:

This suspension does not affect that portion of the regulations which tie an exemption to a demonstration by the operator that a treatment facility has been designed, constructed and maintained to contain or treat the volume of water which would result from a ten-year twenty-four hour precipitation event. In order to obtain an exemption from the BPT and NSPS requirements, the operator must continue, during this suspension period, *at a minimum,* to design, construct and maintain his facility to contain or treat that volume of water. The suspension applies, however, to the additional requirement that the facility experience a ten-year twenty-four hour or larger precipitation event. The determination of whether to impose such an additional requirement shall be made by the permit writer on a case-by-case basis as to any permits which become final during the suspension period.

The rationale and justification for the current storm provisions is set forth in detail in the preambles to DOE's permanent program regulations, 44 FR 15162 *et seq.* (March 13, 1979), and the preamble to DOE's initial program regulations. 44 FR 30619 *et seq.* (May 25, 1979). The pertinent portions of those preambles, together with the documents and analyses cited therein, are hereby made part of EPA's administrative record in this rulemaking. Comments directed to this material will be particularly helpful, although interested persons may submit any comments, suggestions and supporting data which they deem appropriate. All comments received on or before August 6, 1979, will be considered by the agency.

EPA is also authorizing several additional studies which it anticipates will be completed within the next forty-five days. These studies will assess the feasibility of the current storm provisions in light of the BPT and NSPS requirements governing discharges of total suspended solids (TSS). In addition, the studies will assess the feasibility of tying an exemption to both a design capacity and a specific flow rate. For example, the exemption might be tied to a demonstration by the operator that the sediment pond (1) is operated and maintained to contain a volume of water equal to a ten-year twenty-four hour storm falling on the relevant area *and* (2) experienced a flow in excess of some predetermined rate—for example, either the average flow rate from a ten-year twenty-four hour storm, the peak flow from that storm, or some intermediate flow rate.

EPA encourages comments submitted within the next thirty days to be addressed to this possible alternative scheme as well as the alternatives previously promulgated. In addition, when the supplemental studies described above are completed, EPA will publish in the Federal Register a notice to that effect, which will also solicit comments from the public addressed specifically to those studies and indicate the period within which such comments must be submitted.

After considering the supplemental studies and all comments timely submitted, EPA will repromulgate a catastrophic storm exemption provision.

The agency recognizes that relief from the NSPS and BPT requirements may be appropriate in the case of some catastrophic precipitation events. Therefore, as noted above, permit writers shall continue to provide relief for such events, on a case-by-case basis, during the suspension period. Since this suspension will be effective for a brief period, and since this notice does not affect the applicability of DOE regulations, it is expected that the practical consequences of this suspension will be minimal.

Dated: June 26, 1979.

Barbara Blum,

Acting Administrator.

[FR Doc. 79-20810 Filed 7-5-79; 8:45 am]

BILLING CODE 6560-01-M

GENERAL SERVICES ADMINISTRATION

41 CFR Part 101-19

[FPMR Amendment D-72]

Construction and Alteration of Public Buildings; Accommodations for the Physically Handicapped

AGENCY: General Services Administration.

ACTION: Final rule.

SUMMARY: GSA is changing its regulations to reflect separate reporting formats for federally owned and leased buildings to ensure compliance with accessibility requirements. These changes are made since additional information concerning leased buildings is needed which is unrelated to new construction projects. This regulation will allow GSA to more closely monitor compliance with the requirement for providing accommodations for the physically handicapped, and will clarify the reporting format for reporting agencies.

EFFECTIVE DATE: July 6, 1979.

FOR FURTHER INFORMATION CONTACT: Mr. Richard Hillyard, Realty Specialist, Leasing Division, Office of Space Management, Public Buildings Service, General Services Administration (PRL), Washington, DC 20405 (202-566-0638).

SUPPLEMENTARY INFORMATION: The General Services Administration has determined that this regulation will not impose unnecessary burdens on the economy or on individuals and, therefore, is not significant for the purpose of Executive Order 12044.

The table of contents for Part 101-19 is amended by revising one entry and adding one entry as follows:

PART 101-19—CONSTRUCTION AND ALTERATION OF PUBLIC BUILDINGS

* * * * *

101-19.4902-2974 GSA Form 2974, Status Report for Federally Funded Buildings—Accommodation of Physically Handicapped.

101-19.4902-2974A GSA Form 2974-A, Accessibility to the Physically Handicapped in Leased Buildings.

Subpart 101-19.6—Accommodations for the Physically Handicapped

Section 101-19.607 is revised to read as follows:

§ 101-19.607 Reporting.

(a) Every 6 months, each administering agency shall prepare and submit to the Administrator of General Services reports covering all projects subject to the requirements of this Subpart 101-19.6 for which funds have been appropriated or for which a contract, grant, or loan has been approved (whichever is applicable) and which are still under design or construction, or buildings for which lease contracts have been awarded. Once a project has been reported as being occupied, it need not be included in subsequent reports. Lease projects need to be reported only during the period in which the award was made. Reports on leased buildings should be made on GSA Form 2974A, Accessibility to the Physically Handicapped in Leased Buildings. Interagency report control number 0219-GSA-SA has been assigned to this report. All other reports should be prepared on GSA Form 2974, Status Report for Federally Funded Buildings—Accommodation of Physically Handicapped. Interagency report control number 0031-GSA-SA has been assigned to this report.

(b) The semiannual reporting periods, for purposes of this requirement, end on the last day of February and August. Reports will be due on the fifteenth calendar day of the following month. The initial report will cover facilities subject to this reporting requirement during the period from June 30, 1971, through August 31, 1974.

(c) Reports will be used for surveys and investigations to ensure compliance with The Architectural Barriers Act, as amended, pursuant to the requirements of the act.

Subpart 101-19.49—Illustrations of Forms

1. Section 101-19.4902(b) is revised to read as follows:

§ 101.19.4902 GSA forms.

* * * * *

(b) Agency field offices may obtain their initial supply of GSA Form 2974, Status Report for Federally Funded Buildings—Accommodation of Physically Handicapped, August 1978, and GSA Form 2974A, Accessibility to the Physically Handicapped in Leased Buildings, August 1978, from General Services Administration (3BRDD), Union and Franklin Streets Annex, Building 11, Alexandria, VA 22314. Agency field offices should submit all future requirements to their Washington headquarters office, which will then forward consolidated annual requirements to General Services Administration (BROS), Washington, DC 20405.

2. Section 101-19.4902—2974 is revised as follows:

§ 101-19.4902—2974 GSA Form 2974, Status Report for Federally Funded Buildings—Accommodation of Physically Handicapped.

Note.—The form illustrated in this § 101-19.4902—2974 is filed with the original document and does not appear in this volume.

3. Section 101-19.4902—2974A is added as follows:

§ 101-19.4902—2974A GSA Form 2974-A, Accessibility to the Physically Handicapped in Leased Buildings.

Note.—The form illustrated in this § 101-19.4902—2974A filed with the original document and does not appear in this volume.

(Sec. 205(c), 63 Stat. 390; 40 U.S.C. 486(c))

Dated: June 27, 1979.

Paul E. Goulding,

Acting Administrator of General Services.

[FR Doc. 79-20974 Filed 7-5-79; 8:45 am]

BILLING CODE 6820-23-M

---

41 CFR Part 101-27

[FPMR Amendment E-231]

Supply and Procurement; Returning Items to GSA for Credit

AGENCY: General Services Administration.

ACTION: Final rule.

SUMMARY: This regulation codifies changes in policy on the GSA credit returns program. Prior to these changes, small quantities of stock items were often returned to GSA for credit when it was economically unfeasible. Items also were returned to GSA with discrepancies or packing or packaging deficiencies which resulted in losses to GSA. This regulation will ensure that losses resulting from the GSA credit returns program are minimal.

EFFECTIVE DATE: January 1, 1979.

FOR FURTHER INFORMATION CONTACT: Policies and regulations: Mr. Philip G. Read, Director, Federal Procurement Regulations Directorate, Office of Acquisition Policy (202-566-1867).

Technical assistance: Mr. J. Callahan, Acting director of Inventory Management, Office of Supply, Federal Supply Service (703-557-8360).

SUPPLEMENTARY INFORMATION: FPMR Temporary Regulation E-52, Returning items to GSA for credit, dated July 14, 1978, increased the minimum line item dollar values required for items to be eligible for return to GSA for credit. It also allowed a reduction in the credit granted for material returned to GSA with significant packing or packaging deficiencies. The temporary regulation has been effective in reducing the incidence of items being returned to GSA when it is uneconomical and in reducing the costs incurred by GSA when items are returned that are improperly packed or packaged. The temporary regulation expired on December 31, 1978. The policies in the regulation are incorporated into the FPMR by this amendment.

1. Section 101-27.502 is amended to revise the introductory paragraph and paragraph (a) as follows:

§ 101-27.502 Criteria for return.

Any GSA stock item to be returned to GSA by an agency which has no current or future requirements for that item shall meet the following conditions:

(a) The minimum dollar value per line item, based on the current GSA selling price, shall be:

(1) $50 for hand tools, FSG 51, and measuring tools, FSG 52;

(2) $300 for:

(i) Household furniture, FSC 7105; office furniture, FSC 7110; cabinets, lockers, bins, and shelving, FSC 7125; and miscellaneous furniture and fixtures, FSC 7195;

(ii) Cleaning and polishing compounds and preparations, FSC 7930; and

(iii) Paints, dopes, varnishes, and related products, FSC 8010; preservatives and sealing compounds, FSC 8030; and adhesives, FSC 8040; and

(3) $100 for items in all other Federal supply groups and classes except for Standard forms, FSC 7540; and boxes,

cartons, and crates, FSC 8115, which are not returnable and shall be considered excess and processed in accordance with Part 101–43.

* * * * *

2. Section 101–27.503–2 is revised to read as follows:

§ 101–27.503–2 Unserviceable or incomplete material.

(a) After acceptance by GSA of items with deficiencies which were not the fault of GSA, credit will be granted for the items at a percentage of the current GSA selling price in accordance with the following:

(1) Sixty percent for items which involve limited expenses or effort to restore to serviceable condition (specifically, a deficiency in packing or packaging which restricts the issue or requires repacking or repackaging (condition code E));

(2) Thirty percent when it is economically feasible to repair, overhaul, or recondition the items for return to issuable condition (condition code F); or

(3) Thirty percent when the items require additional parts or components to complete the end item prior to issue (condition code G).

(b) No credit will be given for material returned to GSA which does not meet the above criteria or which was returned to GSA without prior approval.

3. Section 101–27.505(b) is revised to read as follows:

§ 101–27.505 Notice to activity.

* * * * *

(b) Upon receipt of material authorized for return by GSA, the offering activity will be provided verification of receipt and a report of any discrepancies. When the discrepant condition is attributable to carrier negligence, subsequent credit allowed by GSA will be reduced by the amount to be paid the agency by the carrier for any damages incurred. A notice of credit will be provided the offering activity through credit entries on the monthly billing statement from the supporting GSA finance center.

* * * * *

(Sec. 205(c), 63 Stat. 390; 40 U.S.C. 486(c))

Dated: June 27, 1979.

Paul E. Goulding,

Acting Administrator of General Services.

[FR Doc. 79–20802 Filed 7–5–79; 8:45 am]

BILLING CODE 6820–82–M

FEDERAL EMERGENCY MANAGEMENT AGENCY

44 CFR Part 67

[Docket No. FI–5094]

Final Flood Elevation Determination for the Unincorporated Areas of Pike County, Ky. Under the National Flood Insurance Program

AGENCY: Office of Federal Insurance and Hazard Mitigation, FEMA.

ACTION: Final rule.

SUMMARY: Final base (100-year) flood elevations are listed below for selected locations in the unincorporated areas of Pike County, Kentucky.

These base (100-year) flood elevations are the basis for the flood plain management measures that the community is required to either adopt or show evidence of being already in effect in order to qualify or remain qualified for participation in the National Flood Insurance program (NFIP).

EFFECTIVE DATE: The date of issuance of the Flood Insurance Rate Map (FIRM), showing base (100-year) flood elevations, for the unincorporated areas of Pike County, Kentucky.

ADDRESSES: Maps and other information showing the detailed outlines of the flood-prone areas and the final elevations for the unincorporated areas of Pike County, Kentucky are available for review at the Pike County Courthouse, Main Street, Pikeville, Kentucky.

FOR FURTHER INFORMATION CONTACT: Mr. Richard Krimm, National Flood Insurance Program (202) 755–5581 or Toll Free Line (800) 424–8872, Room 5270, 451 Seventh Street, SW, Washington, D.C. 20410.

SUPPLEMENTARY INFORMATION: The Federal Insurance Administrator gives notice of the final determinations of flood elevations for the unincorporated areas of Pike County, Kentucky.

This final rule is issued in accordance with Section 110 of the Flood Disaster Protection Act of 1973 (Pub. L. 93–234), 87 Stat. 980, which added Section 1363 to the National Flood Insurance Act of 1968 (Title XIII of the Housing and Urban Development Act of 1968 (Pub. L. 90–448), 42 U.S.C. 4001–4128, and 44 CFR 67.4(a)). an opportunity for the community or individuals to appeal this determination to or through the community for a period of ninety (90) days has been provided. No appeals of the proposed base flood elevations were received from the community or from individuals within the community.

The Administrator has developed criteria for flood plain management in flood-prone areas in accordance with 44 CFR Part 60.

The final base (100-year) flood elevations for selected locations are:

Source of flooding	Location	Elevation, in feet national geodetic vertical datum
Tug Fork	400 feet downstream of the confluence of McCoy Branch.	650
	Approximately 650 feet upstream of Tate Road Bridge extended.	660
	450 feet downstream of the confluence of Buzzard Roost Branch.	674
	250 feet downstream of the Norfolk and Western Railway.	695
	450 feet downstream of the confluence of Coon Branch.	700

(National Flood Insurance Act of 1968 (Title XIII of Housing and Urban Development Act of 1968), effective January 28, 1969 (33 FR 17804, November 28, 1968), as amended; 42 U.S.C. 4001–4128; Executive Order 12127, 44 FR 19367; and delegation of authority to Federal Insurance Administrator 44 FR 20963.)

Issued: June 14, 1979.

Gloria M. Jimenez,

Federal Insurance Administrator.

[FR Doc. 79–20614 Filed 7–5–79; 8:45 am]

BILLING CODE 4210–23–M

44 CFR Part 67

[Docket No. FI–4951]

Final Flood Elevation Determination for the Town of Clinton, East Feliciana Parish, La. Under the National Flood Insurance Program

AGENCY: Office of Federal Insurance and Hazard Mitigation, FEMA.

ACTION: Final rule.

SUMMARY: Final base (100-year) flood elevations are listed below for selected locations in the Town of Clinton, East Feliciana Parish, Louisiana.

These base (100-year) flood elevations are the basis for the flood plain management measures that the community is required to either adopt or show evidence of being already in effect in order to qualify or remain qualified for participation in the National Flood Insurance Program (NFIP).

EFFECTIVE DATE: The date of issuance of the Flood Insurance Rate Map (FIRM), showing base (100-year) flood elevations, for the Town of Clinton, East Feliciana Parish, Louisiana.

ADDRESSES: Maps and other information showing the detailed outlines of the flood-prone areas and the final elevations for the Town of Clinton, East Feliciana Parish, Louisiana are available for review at the Town Clerk's Office, Town Hall, Clinton, Louisiana.

FOR FURTHER INFORMATION CONTACT: Mr. Richard Krimm, National Flood Insurance Program (202) 755–5581 or Toll Free Line (800) 424–8872 Room 5270, 451 Seventh Street, SW, Washington, D.C. 20410.

SUPPLEMENTARY INFORMATION: The Federal Insurance Administrator gives notice of the final determinations of flood elevations for the Town of Clinton, East Feliciana Parish, Louisiana.

This final rule is issued in accordance with Section 110 of the Flood Disaster Protection Act of 1973 (Pub. L. 93–234), 87 Stat. 980, which added Section 1363 to the National Flood Insurance Act of 1968 (Title XIII of the Housing and Urban Development Act of 1968 (Pub. L. 90–448), 42 U.S.C. 4001–4128, and 44 CFR 67.4(a)). An opportunity for the community or individuals to appeal this determination to or through the community for a period of ninety (90) days has been provided. No appeals of the proposed base flood elevations were received from the community or from individuals within the community.

The Administrator has developed criteria for flood plain management in flood-prone areas in accordance with 44 CFR Part 60.

The final base (100-year) flood elevations for selected locations are:

Source of flooding	Location	Elevation in feet, national geodetic vertical datum
Pretty Creek	Louisiana Highway 10	183
	Just upstream of Woodville Street.	185
Lewis Creek	Just upstream Bank Street	188
	Just upstream Louisiana Highway 67 (Bridge Plank Road).	209

(National Flood Insurance Act of 1968 (Title XIII of Housing and Urban Development Act of 1968), effective January 28, 1969 (33 FR 17804, November 28, 1968), as amended; 42 U.S.C. 4001–4128; Executive Order 12127, 44 FR 19367; and delegation of authority to Federal Insurance Administrator 44 FR 20963).

Issued: June 1, 1979.

Gloria M. Jimenez,

Federal Insurance Administrator.

[FR Doc. 79-20615 Filed 7-5-79; 8:45 am]

BILLING CODE 4210-23-M

44 CFR Part 67

[Docket No. FI-4977]

Final Flood Elevation Determination for the Town of Milo, Piscataquis County, Maine, Under the National Flood Insurance Program

AGENCY: Office of Federal Insurance and Hazard Mitigation, FEMA.

ACTION: Final rule.

SUMMARY: Final base (100-year) flood elevations are listed below for selected locations in the Town of Milo, Piscataquis County, Maine.

These base (100-year) flood elevations are the basis for the flood plain management measures that the community is required to either adopt or show evidence of being already in effect in order to qualify or remain qualified for participation in the National Flood Insurance Program (NFIP).

EFFECTIVE DATE: The date of issuance of the Flood Insurance Rate Map (FIRM), showing base (100-year) flood elevations, for the Town of Milo, Piscataquis County, Maine.

ADDRESSES: Maps and other information showing the detailed outlines of the flood-prone areas and the final elevations for the Town of Milo, Piscataquis County, Maine, are available for review at the Town Hall, Milo, Maine.

FOR FURTHER INFORMATION CONTACT: Mr. Richard Krimm, National Flood Insurance Program, (202) 755–5581 or Toll Free Line (800) 424–8872, Room 5270, 451 Seventh Street, SW., Washington, D.C. 20410.

SUPPLEMENTARY INFORMATION: The Federal Insurance Administrator gives notice of the final determinations of flood elevations for the Town of Milo, Piscataquis County, Maine.

This final rule is issued in accordance with section 110 of the Flood Disaster Protection Act of 1973 (Pub. L. 93–234), 87 Stat. 980, which added section 1363 to the National Flood Insurance Act of 1968 (Title XIII of the Housing and Urban Development Act of 1968 (Pub. L. 90–448), 42 U.S.C. 4001–4128, and 44 CFR 67.4(a)). An opportunity for the community or individuals to appeal this determination to or through the community for a period of ninety (90) days has been provided. No appeals of the proposed base flood elevations were received from the community or from individuals within the community.

The Administrator has developed criteria for flood plain management in flood-prone areas in accordance with 44 CFR Part 60.

The final base (100-year) flood elevations for selected locations are:

Source of flooding	Location	Elevation in feet, national geodetic vertical datum
Piscataquis River	Corporate Limits	278
	Confluence of Stinking Brook	279
	Route 16	284
	Railroad Bridge	287
	Ferry Road	287
	Confluence of Morrison Brook.	289
	Milo and Sebec Townline	290
Pleasant River	Corporate Limits Downstream.	278
	Howland-Medford Road (Pleasant Street).	286
	Gaging Station	307
	Corporate Limits	328
Sebec River	Confluence with Piscataquis River.	285
	Route 16	288
	Bangor and Aroostook Railroad.	290
	Corporate Limits	292

(National Flood Insurance Act of 1968 (Title XIII of Housing and Urban Development Act of 1968), effective January 28, 1969 (33 FR 17804, November 28, 1968), as amended; 42 U.S.C. 4001–4128; Executive Order 12127, 44 FR 19367; and delegation of authority to Federal Insurance Administrator 44 FR 20963.)

Issued: June 12, 1979.

Gloria M. Jimenez,

Federal Insurance Administrator.

[FR Doc. 79-20616 Filed 7-5-79; 8:45 am]

BILLING CODE 4210-23-M

44 CFR Part 67

[Docket No. FI-5050]

Final Flood Elevation Determination for the Town of Porter, Oxford County, Maine, Under the National Flood Insurance Program

AGENCY: Office of Federal Insurance and Hazard Mitigation, FEMA.

ACTION: Final rule.

SUMMARY: Final base (100-year) flood elevations are listed below for selected locations in the Town of Porter, Oxford County, Maine.

These base (100-year) flood elevations are the basis for the flood plain management measures that the community is required to either adopt or show evidence of being already in effect in order to qualify or remain qualified for participation in the National Flood Insurance Program (NFIP).

EFFECTIVE DATE: The date of issuance of the Flood Insurance Rate Map (FIRM), showing base (100-year) flood elevations, for the Town of Porter, Maine.

ADDRESSES: Maps and other information showing the detailed outlines of the flood-prone areas and the final elevations for the Town of Porter, are available for review at Town Office, Porter, Maine.

FOR FURTHER INFORMATION CONTACT: Mr. Richard Krimm, National Flood Insurance Program (202) 755-5581 or Toll Free Line (800) 424-8872, Room 5270, 451 Seventh Street, SW., Washington, D.C. 20410.

SUPPLEMENTARY INFORMATION: The Federal Insurance Administrator gives notice of the final determinations of flood elevations for the Town of Porter, Maine.

This final rule is issued in accordance with section 110 of the Flood Disaster Protection Act of 1973 (Pub. L. 93-234), 87 Stat. 980, which added section 1363 to the National Flood Insurance Act of 1968 (Title XIII of the Housing and Urban Development Act of 1968 (Pub. L. 90-448), 42 U.S.C. 4001-4128, and 44 CFR 67.4(a)). An opportunity for the community or individuals to appeal this determination to or through the community for a period of ninety (90) days has been provided. No appeals of the proposed base flood elevations were received from the community or from individuals within the community.

The Administrator has developed criteria for flood plain management in flood-prone areas in accordance with 44 CFR Part 60.

The final base (100-year) flood elevations for selected locations are:

Source of flooding	Location	Elevation in feet, national geodetic vertical datum
Ossipee River	State Route 25—50 feet*	363
	State Route 160—50 feet*	383
Mill Brook	Confluence with Ossipee River—20 feet*	382
	State Route 25 Bridge—30 feet*	404
Spectacle Ponds Brook.	State Route 160—40 feet*	369
	Pine Street—70 feet*	377

*Upstream from centerline.

(National Flood Insurance Act of 1968 (Title XIII of Housing and Urban Development Act of 1968), effective January 28, 1969 (33 FR 17804, November 28, 1968), as amended; 42 U.S.C. 4001-4128; Executive Order 12127, 44 FR 19367; and delegation of authority to Federal Insurance Administrator, 44 FR 20963).

Issued: June 14, 1979.

Gloria M. Jimenez,

Federal Insurance Administrator.

[FR Doc. 79-20617 Filed 7-5-79; 8:45 am]

BILLING CODE 4210-23-M

44 CFR Part 67

[Docket No. FI-4808]

Final Flood Elevation Determination for the Town of Southampton, Hampshire County, Mass., Under the National Flood Insurance Program

AGENCY: Office of Federal Insurance and Hazard Mitigation, FEMA.

ACTION: Final rule.

SUMMARY: Final base (100-year) flood elevations are listed below for selected locations in the Town of Southampton, Hampshire County, Massachusetts.

These base (100-year) flood elevations are the basis for the flood plain management measures that the community is required to either adopt or show evidence of being already in effect in order to qualify or remain qualified for participation in the National Flood Insurance Program (NFIP).

EFFECTIVE DATE: The date of issuance of the Flood Insurance Rate Map (FIRM), showing base (100-year) flood elevations, for the Town of Southampton, Hampshire County, Massachusetts.

ADDRESSES: Maps and other information showing the detailed outlines of the flood prone areas and the final elevations for the Town of Southampton are available for review at the Planning Board Office, Town Hall, Southampton, Massachusetts.

FOR FURTHER INFORMATION CONTACT: Mr. Richard Krimm, National Flood Insurance Program (202) 755-5581 or Toll Free Line (800) 424-8872, Room 5270, 451 Seventh Street, SW., Washington, D.C. 20410.

SUPPLEMENTARY INFORMATION: The Federal Insurance Administrator gives notice of the final determinations of flood elevations for the Town of Southampton, Hampshire County, Massachusetts.

This final rule is issued in accordance with section 110 of the Flood Disaster Protection Act of 1973 (Pub. L. 93-234), 87 Stat. 980, which added section 1363 to the National Flood Insurance Act of 1968 (Title XIII of the Housing and Urban Development Act of 1968 (Pub. L. 90-448), 42 U.S.C. 4001-4128, and 44 CFR 67.4(a)). An opportunity for the community or individuals to appeal this determination to or through the community for a period of ninety (90) days has been provided. No appeals of the proposed base flood elevations were received from the community or from individuals within the community.

The Administrator has developed criteria for flood plain management in flood-prone areas in accordance with 24 CFR Part 1910.

The final base (100-year) flood elevations for selected locations are:

Source of flooding	Location	Elevation in feet, national geodetic vertical datum
Broad Brook	South Corporate Limits	219
	0.50 mile above South Corporate Limit.	219
	Just downstream of Farm Bridge.	223
	Just upstream of Farm Bridge.	224
Manhan River	North Corporate Limit	142
	Just downstream of South Main Street.	149
	Just downstream of Gunn Road.	154
	0.1 mile upstream of Gunn Road.	166
	Confluence with Tripple Brook.	163
	Confluence with Potash Brook.	167
	Just upstream of East Street.	170
	Just downstream of Conrail	178
	Just upstream of a dam 200 feet upstream from Conrail.	190
	1.2 miles upstream of Route 10 Bridge.	198
	Just upstream of Gilbert Road.	200
	South Central Corporate Limits.	206
	South West Corporate Limits.	236
	Confluence with Sacket Brook.	249
	Just downstream of Russellville Road.	259
	Just upstream of Russellville Road.	259
	0.25 mile upstream of Russellville Road.	273
North Branch Manhan River.	Confluence with South Branch Manhan River.	142
	Just upstream of Pomeroy Meadow Road.	143
	0.6 miles upstream of Pomeroy Meadow Road.	144
	1.1 miles upstream of Pomeroy Meadow Road.	159
	Just downstream Glendale Road.	163

(National Flood Insurance Act of 1968 (Title XIII of Housing and Urban Development Act of 1968), effective January 28, 1969 (33 FR 17804, November 28, 1968), as amended; 42 U.S.C. 4001-4128; Executive Order 12127, 44 FR 19367; and delegation of authority to Federal Insurance Administrator 44 FR 20963.)

Issued: June 12, 1979.

Gloria M. Jimenez,

Federal Insurance Administrator.

[FR Doc. 79-20618 Filed 7-5-79; 8:45 am]

BILLING CODE 4210-23-M

44 CFR Part 67

[Docket No. FI-5002]

Final Flood Elevation Determination for the City of New Buffalo, Berrien County, Mich., Under the National Flood Insurance Program

AGENCY: Office of Federal Insurance and Hazard Mitigation, FEMA.

ACTION: Final rule.

SUMMARY: Final base (100-year) flood elevations are listed below for selected locations in the City of New Buffalo, Berrien County, Michigan.

These base (100-year) flood elevations are the basis for the flood plain management measures that the community is required to either adopt or show evidence of being already in effect in order to qualify or remain qualified for participation in the National Flood Insurance Program (NFIP).

EFFECTIVE DATE: The data of issuance of the Flood Insurance Rate Map (FIRM), showing base (100-year) flood elevations, for the City of New Buffalo, Berrien County, Michigan.

ADDRESSEES: Maps and other information showing the detailed outlines of the flood prone areas and the final elevations for the City of New Buffalo are available for review at the City Hall, New Buffalo, Michigan.

FOR FURTHER INFORMATION CONTACT: Mr. Richard Krimm, National Flood Insurance Program (202) 755-5581 or Toll Free Line (800) 424-8872, Room 5270, 451 Seventh Street, SW., Washington, D.C. 20410.

SUPPLEMENTARY INFORMATION: The Federal Insurance Administrator gives notice of the final determinations of flood elevations for the City of New Buffalo, Berrien County, Michigan.

This final rule is issued in accordance with section 110 of the Flood Disaster Protection Act of 1973 (Pub. L. 93-234), 87 Stat. 980, which added section 1363 to the National Flood Insurance Act of 1968 (Title XIII of the Housing and Urban Development Act of 1968 (Pub. L. 90-448), 42 U.S.C. 4001-4128, and 44 CFR 67.4(a)). An opportunity for the community or individuals to appeal this determination to or through the community for a period of ninety (90) days has been provided. No appeals of the proposed base flood elevations were received from the community or from individuals within the community.

The Administrator has developed criteria for flood plain management in flood-prone areas in accordance with 44 CFR Part 60.

The proposed base (100-year) flood elevations for selected locations are:

Source of flooding	Location	Elevation, in feet national geodetic vertical datum
Galien River	Mouth at Lake Michigan	584
	Eastern corporate limits	584
Lake Michigan	Shoreline	584

(National Flood Insurance Act of 1968 (Title XIII of Housing and Urban Development Act of 1968), effective January 28, 1969 (33 FR 17804, November 28, 1978), as amended; 42 U.S.C. 4001-4128; Executive Order 12127, 44 FR 19367; and delegation of authority to Federal Insurance Administrator, 44 FR 20963.)

Issued: June 1, 1979.

Gloria M. Jimenez,

Federal Insurance Administrator.

[FR Doc. 79-20619 Filed 7-5-79; 8:45 am]

BILLING CODE 4210-23-M

44 CFR Part 67

[Docket No. FI-5003]

Final Flood Elevation Determination for the Township of New Buffalo, Berrien County, Mich., Under the National Flood Insurance Program

AGENCY: Office of Federal Insurance and Hazard Mitigation, FEMA.

ACTION: Final rule.

SUMMARY: Final base (100-year) flood elevations are listed below for selected locations in the Township of New Buffalo, Berrien County, Michigan.

These base (100-year) flood elevations are the basis for the flood plain management measures that the community is required to either adopt or show evidence of being already in effect in order to qualify or remain qualified for participation in the National Flood Insurance Program (NFIP).

EFFECTIVE DATE: The data of issuance of the Flood Insurance Rate Map (FIRM), showing base (100-year) flood elevations, for the Township of New Buffalo, Berrien County, Michigan.

ADDRESSEES: Maps and other information showing the detailed outlines of the flood prone areas and the final elevations for the Township of New Buffalo are available for review at the Township Hall, New Buffalo, Michigan.

FOR FURTHER INFORMATION CONTACT: Mr. Richard Krimm, National Flood Insurance Program (202) 755-5581 or Toll Free Line (800) 424-8872, Room 5270, 451 Seventh Street, SW., Washington, D.C. 20410.

SUPPLEMENTARY INFORMATION: The Federal Insurance Administrator gives notice of the final determinations of flood elevations for the Township of New Buffalo, Berrien County, Michigan.

This final rule is issued in accordance with section 110 of the Flood Disaster Protection Act of 1973 (Pub. L. 93-234), 87 Stat. 980, which added section 1363 to the National Flood Insurance Act of 1968 (Title XIII of the Housing and Urban Development Act of 1968 (Pub. L. 90-448), 42 U.S.C. 4001-4128, and 44 CFR 67.4(a)). An opportunity for the community or individuals to appeal this determination to or through the community for a period of ninety (90) days has been provided. No appeals of the proposed base flood elevations were received from the community or from individuals within the community.

The Administrator has developed criteria for flood plain management in flood-prone areas in accordance with 44 CFR Part 60.

The final base (100-year) flood elevations for selected locations are:

Source of flooding	Location	Elevation, in feet national geodetic vertical datum
Galien River	Western corporate limits	584
	Just upstream of Red Arrow Highway.	585
	2,500 feet upstream of Red Arrow Highway.	588
Lake Michigan	Shoreline	584

(National Flood Insurance Act of 1968 (Title XIII of Housing and Urban Development Act of 1968), effective January 28, 1969 (33 FR 17804, November 28, 1978), as amended; 42 U.S.C. 4001-4128; Executive Order 12127, 44 FR 19367; and delegation of authority to Federal Insurance Administrator 44 FR 20963.)

Issued: June 1, 1979.

Gloria M. Jimenez,

Federal Insurance Administrator.

[FR Doc. 79-20620 Filed 7-5-79; 8:45 am]

BILLING CODE 4210-23-M

44 CFR Part 67

[Docket No. FI-5004]

Final Flood Elevation Determination for the City of Centerville, Anoka County, Minn., Under the National Flood Insurance Program

AGENCY: Office of Federal Insurance and Hazard Mitigation, FEMA.

ACTION: Final rule.

SUMMARY: Final base (100-year) flood elevations are listed below for selected

locations in the City of Centerville, Anoka County, Minnesota.

These base (100-year) flood elevations are the basis for the flood plain management measures that the community is required to either adopt or show evidence of being already in effect in order to qualify or remain qualified for participation in the National Flood Insurance Program (NFIP).

EFFECTIVE DATE: The data of issuance of the Flood Insurance Rate Map (FIRM), showing base (100-year) flood elevations, for the City of Centerville, Anoka County, Minnesota.

ADDRESSEES: Maps and other information showing the detailed outlines of the flood prone areas and the final elevations for the City of Centerville are available for review at the City Hall, 1694 Sorel Street, Centerville, Minnesota.

FOR FURTHER INFORMATION CONTACT: Mr. Richard Krimm, National Flood Insurance Program (202) 755-5581 or Toll Free Line (800) 424-8872, Room 5270, 451 Seventh Street, SW., Washington, D.C. 20410.

SUPPLEMENTARY INFORMATION: The Federal Insurance Administrator gives notice of the final determinations of flood elevations for the City of Centerville, Anoka County, Minnesota.

This final rule is issued in accordance will section 110 of the Flood Disaster Protection Act of 1973 (Pub. L. 93-234), 87 Stat. 980, which added section 1363 to the National Flood Insurance Act of 1968 (Title XIII of the Housing and Urban Development Act of 1968 (Pub. L. 90-448), 42 U.S.C. 4001-4128, and 44 CFR 67.4(a)). An opportunity for the community or individuals to appeal this determination to or through the community for a period of ninety (90) days has been provided. No appeals of the proposed base flood elevations were received from the community or from individuals within the community.

The Administrator has developed criteria for flood plain management in flood-prone areas in accordance with 44 CFR Part 60.

The final base (100-year) flood elevations for selected locations are:

Source of flooding	Location	Elevation, in feet national geodetic vertical datum
Clearwater Creek	Mouth at Peltier Lake	887
	Just downstream of Main Street.	899
	Just upstream of Main Street.	906
	Eastern corporate limits	906

(National Flood Insurance Act of 1968 (Title XIII of Housing and Urban Development Act of 1968), effective January 28, 1969 (33 FR 17804, November 28, 1978), as amended; 42 U.S.C. 4001-4128; Executive Order 12127, 44 FR 19367; and delegation of authority to Federal Insurance Administrator 44 FR 20963.)

Issued: June 1, 1979.

Gloria M. Jimenez,

Federal Insurance Administrator.

[FR Doc. 79-20621 Filed 7-5-79; 8:45 am]

BILLING CODE 4210-23-M

---

44 CFR Part 67

[Docket No. FI-5005]

Final Flood Elevation Determination for the City of Shorewood, Hennepin County, Minn., Under the National Flood Insurance Program

AGENCY: Office of Federal Insurance and Hazard Mitigation, FEMA.

ACTION: Final rule.

SUMMARY: Final base (100-year) flood elevations are listed below for selected locations in the City of Shorewood, Hennepin County, Minnesota.

These base (100-year) flood elevations are the basis for the flood plain management measures that the community is required to either adopt or show evidence of being already in effect in order to qualify or remain qualified for participation in the National Flood Insurance Program (NFIP).

EFFECTIVE DATE: The date of issuance of the Flood Insurance Rate Map (FIRM), showing base (100-year) flood elevations, for the City of Shorewood, Hennepin County, Minnesota.

ADDRESSES: Maps and other information showing the detailed outlines of the flood-prone areas and the final elevations for the City of Shorewood are available for review at the City Hall, 20630 Manor Road, Shorewood, Minnesota.

FOR FURTHER INFORMATION CONTACT: Mr. Richard Krimm, National Flood Insurance Program, (202) 755-5581 or Toll Free Line (800) 424-8872, Room 5270, 451 Seventh Street SW., Washington, D.C. 20410.

SUPPLEMENTARY INFORMATION: The Federal Insurance Administrator gives notice of the final determinations of flood elevations for the City of Shorewood, Hennepin County, Minnesota.

This final rule is issued in accordance with section 110 of the Flood Disaster Protection Act of 1973 (Pub. L. 93-234), 87 Stat. 980, which added section 1363 to the National Flood Insurance Act of 1968 (Title XIII of the Housing and Urban Development Act of 1968 (Pub. L. 90-448), 42 U.S.C. 4001-4128, and 44 CFR 67.4(a)). An opportunity for the community or individuals to appeal this determination to or through the community for a period of ninety (90) days has been provided. No appeals of the proposed base flood elevations were received from the community or from individuals within the community.

The Administrator has developed criteria for flood plain management in flood-prone areas in accordance with 44 CFR Part 60.

The final base (100-year) flood elevations for selected locations are:

Source of flooding	Location	Elevation in feet, national geodetic vertical datum
Lake Minnetonka	Entire lake	931

(National Flood Insurance Act of 1968 (Title XIII of Housing and Urban Development Act of 1968), effective January 28, 1969 (33 FR 17804, November 28, 1978), as amended; 42 U.S.C. 4001-4128; Executive Order 12127, 44 FR 19367; and delegation of authority to Federal Insurance Administrator 44 FR 20963.)

Issued: June 1, 1979.

Gloria M. Jimenez,

Federal Insurance Administrator.

[FR Doc. 79-20622 Filed 7-5-79; 8:45 am]

BILLING CODE 4210-23-M

---

44 CFR Part 67

[Docket No. FI-4991]

Final Flood Elevation Determination for the City of Warroad, Roseau County, Minn., Under the National Flood Insurance Program

AGENCY: Office of Federal Insurance and Hazard Mitigation, FEMA.

ACTION: Final rule.

SUMMARY: Final base (100-year) flood elevations are listed below for selected locations in the City of Warroad, Roseau County, Minnesota.

These base (100-year) flood elevations are the basis for the flood plain management measures that the community is required to either adopt or show evidence of being already in effect in order to qualify or remain qualified for participation in the National Flood Insurance Program (NFIP).

EFFECTIVE DATE: The date of issuance of the Flood Insurance Rate Map (FIRM), showing base (100-year) flood elevations, for the City of Warroad, Roseau County, Minnesota.

ADDRESSES: Maps and other information showing the detailed outlines of the flood-prone areas and the final elevations for the City of Warroad are available for review at the City Hall, Warroad, Minnesota.

FOR FURTHER INFORMATION CONTACT: Mr. Richard Krimm, National Flood Insurance Program, (202) 755-5581 or Toll Free Line (800) 424-8872, Room 5270, 451 Seventh Street, SW., Washington, D.C. 20410.

SUPPLEMENTARY INFORMATION: The Federal Insurance Administrator gives notice of the final determinations of flood elevations for the City of Warroad, Roseau County, Minnesota.

This final rule is issued in accordance with section 110 of the Flood Disaster Protection Act of 1973 (Pub. L. 93-234), 87 Stat. 980, which added section 1363 to the National Flood Insurance Act of 1968 (Title XIII of the Housing and Urban Development Act of 1968 (Pub. L. 90-448), 42 U.S.C. 4001-4128, and 44 CFR 67.4(a)). An opportunity for the community or individuals to appeal this determination to or through the community for a period of ninety (90) days has been provided. No appeals of the proposed base flood elevations were received from the community or from individuals within the community.

The Administrator has developed criteria for flood plain management in flood-prone areas in accordance with 44 CFR Part 60.

The final base (100-year) flood elevations for selected locations are:

Source of flooding	Location	Elevation in feet, national geodetic vertical datum
Warroad River	At the confluence with Lake of the Woods.	1064
	At Canadian National Railway.	1064
	2.1 miles upstream of Canadian National Railway.	1064

(National Flood Insurance Act of 1968 (Title XIII of Housing and Urban Development Act of 1968), effective January 28, 1969 (33 FR 17804, November 28, 1978), as amended; 42 U.S.C. 4001-4128; Executive Order 12127, 44 FR 19367; and delegation of authority to Federal Insurance Administrator 44 FR 20963).

Issued: June 1, 1979.

Gloria M. Jimenez,

Federal Insurance Administrator.

[FR Doc. 79-20623 Filed 7-5-79; 8:45 am]

BILLING CODE 4210-23-M

44 CFR Part 67

[Docket No. FI-4350]

Final Flood Elevation Determination for the City of Portageville, New Madrid County, Mo. Under the National Flood Insurance Program

AGENCY: Office of Federal Insurance and Hazard Mitigation, FEMA.

ACTION: Final rule.

SUMMARY: Final base (100-year) flood elevations are listed below for selected locations in the City of Portageville, New Madrid County, Missouri.

These base (100-year) flood elevations are the basis for the flood plain management measures that the community is required to either adopt or show evidence of being already in effect in order to qualify or remain qualified for participation in the National Flood Insurance Program (NFIP).

EFFECTIVE DATE: The data of issuance of the Flood Insurance Rate Map (FIRM), showing base (100-year) flood elevations, for the City of Portageville, New Madrid County, Missouri.

ADDRESSES: Maps and other information showing the detailed outlines of the flood prone areas and the final elevations for the City of Portageville are available for review at the City Hall, Portageville, Missouri.

FOR FURTHER INFORMATION CONTACT: Mr. Richard Krimm, National Flood Insurance Program, (202) 755-5581 or Toll Free Line (800) 424-8872, Room 5270, 451 Seventh Street, SW., Washington, D.C. 20410.

SUPPLEMENTARY INFORMATION: The Federal Insurance Administrator gives notice of the final determinations of flood elevations for the City of Portageville, New Madrid County, Missouri.

This final rule is issued in accordance with section 110 of the Flood Disaster Protection Act of 973 (Pub. L. 93-234), 87, Stat. 980, which added section 1363 to the National Flood Insurance Act of 1968 (Title XIII of the Housing and Urban Development Act of 1968 (Pub. L. 90-448), 42 U.S.C. 4001-4128, and 44 CFR 67.4(a)). An opportunity for the community or individuals to appeal this determination to or through the community for a period of ninety (90) days has been provided. No appeals of the proposed base flood elevations were received from the community or from individuals within the community.

The Administrator has developed criteria for flood plain management in flood-prone areas in accordance with 44 CFR Part 60.

The final base (100-year) flood elevations for selected locations are:

Source of flooding	Location	Elevation in feet, national geodetic vertical datum
Main Ditch	Northeast corporate limit	281
Portageville Open Bay	West corporate limit	279
	At St. Louis & San Francisco Railroad.	281

(National Flood Insurance Act of 1968 (Title XIII of Housing and Urban Development Act of 1968), effective January 28, 1969 (33 FR 17804, November 28, 1978), as amended; 42 U.S.C. 4001-4128; Executive Order 12127, 44 FR 19367; and delegation of authority to Federal Insurance Administrator 44 FR 20963.)

Issued: June 1, 1979.

Gloria M. Jimenez,

Federal Insurance Administrator.

[FR Doc. 79-20624 Filed 7-5-79; 8:45 am]

BILLING CODE 4210-23-M

44 CFR Part 67

[Docket No. FI-5142]

Final Flood Elevation Determination for the Village of Bennington, Douglas County, Nebr. Under the National Flood Insurance Program

AGENCY: Office of Federal Insurance and Hazard Mitigation, FEMA.

ACTION: Final rule.

SUMMARY: Final base (100-year) flood elevations are listed below for selected locations in the Village of Bennington, Douglas County, Nebraska.

These base (100-year) flood elevations are the basis for the flood plain management measures that the community is required to either adopt or show evidence of being already in effect in order to qualify or remain qualified for participation in the National Flood Insurance Program (NFIP).

EFFECTIVE DATE: The date of issuance of the Flood Insurance Rate Map (FIRM), showing base (100-year) flood elevations, for the Village of Bennington, Douglas County, Nebraska.

ADDRESSES: Maps and other information showing the detailed outlines of the flood prone areas and the final elevations for the Village of Bennington are available for review at the Village Office, Bennington, Nebraska.

FOR FURTHER INFORMATION CONTACT: Mr. Richard Krimm, National Flood Insurance Program, (202) 755-5581 or Toll Free Line (800) 424-8872, Room 5270, 451 Seventh Street, SW., Washington, D.C. 20410.

SUPPLEMENTARY INFORMATION: The Federal Insurance Administrator gives notice of the final determinations of flood elevations for the Village of Bennington, Douglas County, Nebraska.

This final rule is issued in accordance with section 110 of the Flood Disaster Protection Act of 1973 (Pub. L. 93–234), 87 Stat. 980, which added section 1363 to the National Flood Insurance Act of 1968 (Title XIII of the Housing and Urban Development Act of 1968 (Pub. L. 90–448), 42 U.S.C. 4001–4128, and 44 CFR 67.4(a)). An opportunity for the community or individuals to appeal this determination to or through the community for a period of ninety (90) days has been provided. No appeals of the proposed base flood elevations were received from the community or from individuals within the community.

The Administrator has developed criteria for flood plain management in flood-prone areas in accordance with 44 CFR Part 60.

The final base (100-year) flood elevations for selected locations are:

Source of flooding	Location	Elevation in feet, national geodetic vertical datum
Big Papillion Creek.....	Approximately 1.38 miles downstream of 156th Street (Extraterritorial Limits)..	1,083
	Approximately 1.1 mile downstream of 156th Street.	1,083
	Approximately .75 mile downstream of 156th Street.	1,086
	Approximately 260 feet upstream of 156th Street.	1,092
	Approximately 230 feet upstream of Bennington Road.	1,094
	Approximately 2,940 feet upstream of Bennington Road.	1,097

(National Flood Insurance Act of 1968 (Title XIII of Housing and Urban Development Act of 1968), effective January 28, 1969 (33 FR 17804, November 28, 1978), as amended; 42 U.S.C. 4001–4128; Executive Order 12127, 44 FR 19367; and delegation of authority to Federal Insurance Administrator 44 FR 20963.)

Issued: June 1, 1979.

Gloria M. Jimenez,

Federal Insurance Administrator.

[FR Doc. 79-20625 Filed 7-5-79; 8:45 am]

BILLING CODE 4210-23-M

44 CFR Part 67

[Docket No. FI-5143]

Final Flood Elevation Determination for the City of Tecumseh, Johnson County, Nebr. Under the National Flood Insurance Program

AGENCY: Office of Federal Insurance and Hazard Mitigation, FEMA.

ACTION: Final rule.

SUMMARY: Final base (100-year) flood elevations are listed below for selected locations in the City of Tecumseh, Johnson County, Nebraska.

These base (100-year) flood elevations are the basis for the flood plain management measures that the community is required to either adopt or show evidence of being already in effect in order to qualify or remain qualified for participation in the National Flood Insurance Program (NFIP).

EFFECTIVE DATE: The date of issuance of the Flood Insurance Rate Map (FIRM), showing base (100-year) flood elevations, for the City of Tecumseh, Johnson County, Nebraska.

ADDRESSES: Maps and other information showing the detailed outlines of the flood-prone areas and the final elevations for the City of Tecumseh are available for review at the City Hall, Tecumseh, Nebraska.

FOR FURTHER INFORMATION CONTACT: Mr. Richard Krimm, National Flood Insurance Program, (202) 755–5581 or Toll Free Line (800) 424–8872, Room 5270, 451 Seventh Street SW., Washington, D.C. 20410.

SUPPLEMENTARY INFORMATION: The Federal Insurance Administrator gives notice of the final determinations of flood elevations for the City of Tecumseh, Johnson County, Nebraska.

This final rule is issued in accordance with section 110 of the Flood Disaster Protection Act of 1973 (Pub. L. 93–234), 87 Stat. 980, which added section 1363 to the National Flood Insurance Act of 1968 (Title XIII of the Housing and Urban Development Act of 1968 (Pub. L. 90–448), 42 U.S.C. 4001–4128, and 44 CFR 67.4(a)). An opportunity for the community or individuals to appeal this determination to or through the community for a period of ninety (90) days has been provided. No appeals of the proposed base flood elevations were received from the community or from individuals within the community.

The Administrator has developed criteria for flood plain management in flood-prone areas in accordance with 44 CFR Part 60.

The final base (100-year) flood elevations for selected locations are:

Source of flooding	Location	Elevation in feet, national geodetic vertical datum
North Fork Big Nemaha River.	Upstream side of 12th Street bridge.	1,112
	2875 feet upstream from 12th Street bridge.	1,113
	320 feet downstream from 1st Street bridge.	1,114
	850 feet downstream from Burlington Northern Railroad.	1,115
	1100 feet downstream from Lincoln Street.	1,116
	2000 feet upstream of Lincoln Street.	1,119
Town Branch.....	Downstream side of Broadway Street bridge.	1,113
	Upstream side of Broadway Street bridge.	1,117
	900 feet upstream from Broadway Street.	1,118
	Downstream side of Lincoln Street.	1,122
	150 feet upstream from Lincoln Street.	1,125
	1290 feet upstream from Lincoln Street.	1,126
	2100 feet upstream from Lincoln Street.	1,130
	160 feet downstream from Route 136.	1,138
	Upstream side of Route 136..	1,140
	1700 feet upstream from Route 136.	1,141

(National Flood Insurance Act of 1968 (Title XIII of Housing and Urban Development Act of 1968), effective January 28, 1969 (33 FR 17804, November 28, 1978), as amended; 42 U.S.C. 4001–4128; Executive Order 12127, 44 FR 19367; and delegation of authority to Federal Insurance Administrator, 44 FR 20963.)

Issued: June 1, 1979.

Gloria M. Jimenez,

Federal Insurance Administrator.

[FR Doc. 79-20626 Filed 7-5-79; 8:45 am]

BILLING CODE 4210-23-M

44 CFR Part 67

[Docket No. FI-5060]

Final Flood Elevation Determination for the Village of Winslow, Dodge County, Nebr. Under the National Flood Insurance Program

AGENCY: Office of Federal Insurance and Hazard Mitigation, FEMA.

ACTION: Final rule.

SUMMARY: Final base (100-year) flood elevations are listed below for selected locations in the Village of Winslow, Dodge County, Nebraska.

These base (100-year) flood elevations are the basis for the flood plain management measures that the community is required to either adopt or show evidence of being already in effect in order to qualify or remain qualified

for participation in the National Flood Insurance Program (NFIP).

EFFECTIVE DATE: The date of issuance of the Flood Insurance Rate Map (FIRM), showing base (100-year) flood elevations, for the Village of Winslow, Dodge County, Nebraska.

ADDRESSES: Maps and other information showing the detailed outlines of the flood-prone areas and the final elevations for the Village of Winslow are available for review at the Village Office, Winslow, Nebraska.

FOR FURTHER INFORMATION CONTACT: Mr. Richard Krimm, National Flood Insurance Program, (202) 755-5581 or Toll Free Line (800) 424-8872, Room 5270, 451 Seventh Street, SW., Washington, D.C. 20410.

SUPPLEMENTARY INFORMATION: The Federal Insurance Administrator gives notice of the final determinations of flood elevations for the Village of Winslow, Dodge County, Nebraska.

This final rule is issued in accordance with section 110 of the Flood Disaster Protection Act of 1973 (Pub. L. 93-234), 87 Stat. 980, which added section 1363 to the National Flood Insurance Act of 1968 (Title XIII of the Housing and Urban Development Act of 1968 (Pub. L. 90-448), 42 U.S.C. 4001-4128, and 44 CFR 67.4(a)). An opportunity for the community or individuals to appeal this determination to or through the community for a period of ninety (90) days has been provided. No appeals of the proposed base flood elevations were received from the community or from individuals within the community.

The Administrator has developed criteria for flood plain management in flood-prone areas in accordance with 44 CFR Part 60.

The final base (100-year) flood elevations for selected locations are:

Source of flooding	Location	Elevation in feet, national geodetic vertical datum
Elkhorn River	1.4 miles downstream of U.S. Highway 77.	1,213
	0.6 miles downstream of U.S. Highway 77.	1,215
	Just upstream of U.S. Highway 77.	1,216
	850 feet upstream of Highway 77 bridge.	1,218
	1,000 feet upstream of Burlington Northern Railroad.	1,220
	0.8 mile upstream of Burlington Northern Railroad.	1,222

(National Flood Insurance Act of 1968 (Title XIII of Housing and Urban Development Act of 1968), effective January 28, 1969 (33 FR 17804, November 28, 1978), as amended; 42 U.S.C. 4001-4128; Executive Order 12127, 44 FR 19367; and delegation of authority to Federal Insurance Adminstrator, 44 FR 20963.)

Issued: June 1, 1979.

Gloria M. Jimenez,

Federal Insurance Administrator.

[FR Doc. 79-20627 Filed 7-5-79; 8:45 am]

BILLING CODE 4210-23-M

---

44 CFR PART 67

[Docket No. FI-5017]

Final Flood Elevation Determination for the Town of Irvington, Essex County, N.J., Under the National Flood Insurance Program

AGENCY: Office of Federal Insurance and Hazard Mitigation, FEMA.

ACTION: Final rule.

SUMMARY: Final base (100-year) flood elevations are listed below for selected locations in the Town of Irvington, Essex County, New Jersey.

These base (100-year) flood elevations are the basis for the flood plain management measures that the community is required to either adopt or show evidence of being already in effect in order to qualify or remain qualified for participation in the National Flood Insurance Program (NFIP).

EFFECTIVE DATE: The date of issuance of the Flood Insurance Rate Map (FIRM), showing base (100-year) flood elevations, for the Town of Irvington, Essex County, New Jersey.

ADDRESSES: Maps and other information showing the detailed outlines of the flood-prone areas and the final elevations for the Town of Irvington, Essex County, New Jersey, are available for review at the Town Engineer's Office, Municipal Building, Civic Square, Irvington, New Jersey.

FOR FURTHER INFORMATION CONTACT: Mr. Richard Krimm, National Flood Insurance Program, (202) 755-5581 or Toll Free Line (800) 424-8872, Room 5270, 451 Seventh Street SW., Washington, D.C. 20410.

SUPPLEMENTARY INFORMATION: The Federal Insurance Administrator gives notice of the final determinations of flood elevations for the Town of Irvington, Essex County, New Jersey.

This final rule is issued in accordance with section 110 of the Flood Disaster Protection Act of 1973 (Pub. L. 93-234), 87 Stat. 980, which added section 1363 to the National Flood Insurance Act of 1968 (Title XIII of the Housing and Urban Development Act of 1968 (Pub. L. 90-448), 42 U.S.C. 4001-4128, and 44 CFR 67.4(a)). An opportunity for the community or individuals to appeal this determination to or through the community for a period of ninety (90) days has been provided. No appeals of the proposed base flood elevations were received from the community or from individuals within the community.

The Administrator has developed criteria for flood plain management in flood-prone areas in accordance with 44 CFR Part 60.

The final base (100-year) flood elevations for selected locations are:

Source of flooding	Location	Elevation in feet, national geodetic vertical datum
Elizabeth River	Yale Avenue	105
	Lyons Avenue	115
	Nye Avenue	122
	Springfield Avenue	124
	Clinton Avenue	136
	Madison Avenue	144
	Corporate Limits	147

(National Flood Insurance Act of 1968 (Title XIII of Housing and Urban Development Act of 1968), effective January 28, 1969 (33 FR 17804, November 28, 1968), as amended; 42 U.S.C. 4001-4128; Executive Order 12127, 44 FR 19367; and delegation of authority to Federal Insurance Administrator 44 FR 20963).

Issued: June 1, 1979.

Gloria M. Jimenez,

Federal Insurance Administrator.

[FR Doc. 79-20628 Filed 7-5-79; 8:45 am]

BILLING CODE 4210-23-M

---

44 CFR PART 67

[Docket No. FI-4469]

Final Flood Elevation Determination for the City of New Brunswick, Middlesex County, N.J. Under the National Flood Insurance Program

AGENCY: Office of Federal Insurance and Hazard Mitigation, FEMA.

ACTION: Final rule.

SUMMARY: Final base (100-year) flood elevations are listed below for selected locations in the City of New Brunswick, Middlesex County, New Jersey.

These base (100-year) flood elevations are the basis for the flood plain management measures that the community is required to either adopt or show evidence of being already in effect in order to qualify or remain qualified for participation in the National Flood Insurance Program (NFIP).

EFFECTIVE DATE: The date of issuance of the Flood Insurance Rate Map (FIRM), showing base (100-year) flood elevations, for the City of New

Brunswick, Middlesex County, New Jersey.

ADDRESSES: Maps and other information showing the detailed outlines of the flood-prone areas and the final elevations for the City of New Brunswick, Middlesex County, New Jersey, are available for review at the City Hall, New Brunswick, New Jersey.

FOR FURTHER INFORMATION CONTACT: Mr. Richard Krimm, National Flood Insurance Program, (202) 755–5581 or Toll Free Line (800) 424–8872, Room 5270, 451 Seventh Street, SW., Washington, D.C. 20410.

SUPPLEMENTARY INFORMATION: The Federal Insurance Administrator gives notice of the final determinations of flood elevations for the City of New Brunswick, Middlesex County, New Jersey.

This final rule is issued in accordance with section 110 of the Flood Disaster Protection Act of 1973 (Pub. L. 93–234), 87 Stat. 980, which added section 1363 to the National Flood Insurance Act of 1968 (Title XIII of the Housing and Urban Development Act of 1968 (Pub. L. 90–448), 42 U.S.C. 4001–4128, and 44 CFR 67.4(a)). An opportunity for the community or individuals to appeal this determination to or through the community for a period of ninety (90) days has been provided. No appeals of the proposed base flood elevations were received from the community or from individuals within the community.

The Administrator has developed criteria for flood plain management in flood-prone areas in accordance with 44 CFR Part 60.

The final base (100-year) flood elevations for selected locations are:

Source of flooding	Location	Elevation in feet, national geodetic vertical datum
Raritan River	New Jersey Turnpike (Upstream).	12
	College Bridge (Upstream)	12
	State Route 18 (Upstream)	15
	Landing Bridge (downstream)	17
Lawrence Brook	New Jersey Turnpike (Upstream).	12
	State Route 18 (Upstream)	22
Mile Run	Franklin Boulevard (Downstream).	21
	Somerset Street (Downstream).	45
	Somerset Street (Upstream)	49
	Jersey Avenue (Upstream)	53
	Cemetery Road (Downstream).	74
	Cemetery Road (Upstream)	77
Tributary to Mile Run	Reed Street (Upstream)	70
	Jersey Avenue (Upstream)	83
	Triangle Road (Downstream).	85

(National Flood Insurance Act of 1968 (Title XIII of Housing and Urban Development Act of 1968), effective January 28, 1969 (33 FR 17804, November 28, 1968), as amended; 42 U.S.C. 4001–4128; Executive Order 12127, 44 FR 19367; and delegation of authority to Federal Insurance Administrator 44 FR 20963.)

Issued: June 1, 1979.

Gloria M. Jimenez,

Federal Insurance Administrator.

[FR Doc. 79-20629 Filed 7-5-79; 8:45 am]

BILLING CODE 4210-23-M

---

44 CFR Part 67

[Docket No. FI-4979]

Final Flood Elevation Determination for the City of South Amboy, Middlesex County, N.J., Under the National Flood Insurance Program

AGENCY: Office of Federal Insurance and Hazard Mitigation, FEMA.

ACTION: Final rule.

SUMMARY: Final base (100-year) flood elevations are listed below for selected locations in the City of South Amboy, Middlesex County, New Jersey.

These base (100-year) flood elevations are the basis for the flood plain management measures that the community is required to either adopt or show evidence of being already in effect in order to qualify or remain qualified for participation in the National Flood Insurance Program (NFIP).

EFFECTIVE DATE: The date of issuance of the Flood Insurance Rate Map (FIRM), showing base (100-year) flood elevations, for the City of South Amboy, Middlesex County, New Jersey.

ADDRESSES: Maps and other information showing the detailed outlines of the flood-prone areas and the final elevations for the City of South Amboy, Middlesex County, New Jersey, are available for review at the City Hall, South Amboy, New Jersey.

FOR FURTHER INFORMATION CONTACT: Mr. Richard Krimm, National Flood Insurance Program, (202) 755–5581 or Toll Free Line (800) 424–8872, Room 5270, 451 Seventh Street SW., Washington, D.C. 20410.

SUPPLEMENTARY INFORMATION: The Federal Insurance Administrator gives notice of the final determinations of flood elevations for the City of South Amboy, Middlesex County, New Jersey.

This final rule is issued in accordance with section 110 of the Flood Disaster Protection Act of 1973 (Pub. L. 93–234), 87 Stat. 980, which added section 1363 to the National Flood Insurance Act of 1968 (Title XIII of the Housing and Urban Development Act of 1968 (Pub. L. 90–448), 42 U.S.C. 4001–4128, and 44 CFR 67.4(a)). An opportunity for the community or individuals to appeal this determination to or through the community for a period of ninety (90) days has been provided. No appeals of the proposed base flood elevations were received from the community or from individuals within the community.

The Administrator has developed criteria for flood plain management in flood-prone areas in accordance with 44 CFR Part 60.

The final base (100-year) flood elevations for selected locations are:

Source of Flooding	Location	Elevation in feet, national geodetic vertical datum
Raritan Bay	Shoreline	12

(National Flood Insurance Act of 1968 (Title XIII of Housing and Urban Development Act of 1968), effective January 28, 1969 (33 FR 17804, November 28, 1968), as amended; 42 U.S.C. 4001–4128; Executive Order 12127, 44 FR 19367; and delegation of authority to Federal Insurance Administrator 44 FR 20963).

Issued: June 1, 1979.

Gloria M. Jimenez,

Federal Insurance Administrator.

[FR Doc. 79-20630 Filed 7-5-79; 8:45 am]

BILLING CODE 4210-23-M

---

44 CFR Part 67

[Docket No. FI-5069]

Final Flood Elevation Determination for the Borough of Watchung, Somerset County, N.J., Under the National Flood Insurance Program

AGENCY: Office of Federal Insurance and Hazard Mitigation, FEMA.

ACTION: Final rule.

SUMMARY: Final base (100-year) flood elevations are listed below for selected locations in the Borough of Watchung, Somerset County, New Jersey.

These base (100-year) flood elevations are the basis for the flood plain management measures that the community is required to either adopt or show evidence of being already in effect in order to qualify or remain qualified for participation in the National Flood Insurance Program (NFIP).

EFFECTIVE DATE: The date of issuance of the Flood Insurance Rate Map (FIRM), showing base (100-year) flood elevations, for the Borough of Watchung, New Jersey.

ADDRESSES: Maps and other information showing the detailed outlines of the flood-prone areas and the final

elevations for the Borough of Watchung, are available for review at Borough Hall, 15 Mountain Boulevard, Watchung, New Jersey.

FOR FURTHER INFORMATION CONTACT: Mr. Richard Krimm, National Flood Insurance Program, (202) 755-5581 or Toll Free Line (800) 424-8872, Room 5270, 451 Seventh Street, SW., Washington, D.C. 20410.

SUPPLEMENTARY INFORMATION: The Federal Insurance Administrator gives notice of the final determinations of flood elevations for the Borough of Watchung, New Jersey.

This final rule is issued in accordance with section 110 of the Flood Disaster Protection Act of 1973 (Pub. L. 93-234), 87 Stat. 980, which added section 1363 to the National Flood Insurance Act of 1968 (Title XIII of the Housing and Urban Development Act of 1968 (Pub. L. 90-448), 42 U.S.C. 4001-4128, and 44 CFR 67.4(a)). An opportunity for the community or individuals to appeal this determination to or through the community for a period of ninety (90) days has been provided. No appeals of the proposed base flood elevations were received from the community or from individuals within the community.

The Administrator has developed criteria for flood plain management in flood-prone areas in accordance with 44 CFR Part 60.

The final base (100-year) flood elevations for selected locations are:

Source of flooding	Location	Elevation in feet, national geodetic vertical datum
Green Brook	Raymond Avenue—20 feet*	129
	Terrill Road—30 feet*	137
	U.S. Route 22—20 feet*	147
	Road Bridge—30 feet*	158
	Park Avenue—20 feet*	159
	Union Avenue—20 feet*	161
	Dam Ruins—20 feet*	193
	New Providence Road—30 feet*.	199
	Valley Road—30 feet*	205
	Oak Way—20 feet*	210
	Private Road—20 feet*	235
	Bonnie Burn Road—20 feet*.	254
	Plainfield Avenue (1st crossing)—20 feet*.	259
	Interstate Highway 78 (1st crossing)—40 feet*.	308
	Plainfield Avenue (2nd crossing)—20 feet*.	349
	Plainfield Avenue (3rd crossing)—30 feet*.	377
	Appletree Road—20 feet*	398
Stony Brook	Johnston Drive—30 feet*	116
	Somerset Street—30 feet*	188
East Branch Stony Brook.	Stirling Road—20 feet*	189
	Private Road downstream of Best Lake Dam—30 feet*.	191
	Best Lake Dam—60 feet**	191
	Best Lake Dam—20 feet*	200
	Valley Drive—20 feet*	221
	Private Road (3rd crossing)—30 feet*.	227
	Private Road (6th crossing)—20 feet*.	240
West Branch Stony Brook.	Mountain Boulevard—20 feet*.	183
	Brook Dale Road—20 feet*	207
	Private Road (2nd crossing)—30 feet*.	217
West Branch Stony Brook Tributary.	Driveway No. 1—20 feet*	211
	Sunlit Drive—20 feet*	224
	Driveway No. 3—20 feet*	234
	Driveway No. 4—30 feet*	248
	Footbridge No. 2—30 feet*	251
	Mountain Boulevard—20 feet*.	259

*Upstream from centerline
**Downstream from centerline

(National Flood Insurance Act of 1968 (Title XIII of Housing and Urban Development Act of 1968), effective January 28, 1969 (33 FR 17804, November 28, 1968), as amended; 42 U.S.C. 4001-4128; Executive Order 12127, 44 FR 19367; and delegation of authority to Federal Insurance Administrator, 44 FR 20963).

Issued: June 1, 1979.

Gloria M. Jimenez,

Federal Insurance Administrator.

[FR Doc. 79-20631 Filed 7-5-79; 8:45 am]

BILLING CODE 4210-23-M

44 CFR Part 67

[Docket No. FI-5070]

Final Flood Elevation Determination for the Borough of Westville, Gloucester County, N.J., Under the National Flood Insurance Program

AGENCY: Office of Federal Insurance and Hazard Mitigation, FEMA.

ACTION: Final rule.

SUMMARY: Final base (100-year) flood elevations are listed below for selected locations in the Borough of Westville, Gloucester County, New Jersey.

These base (100-year) flood elevations are the basis for the flood plain management measures that the community is required to either adopt or show evidence of being already in effect in order to qualify or remain qualified for participation in the National Flood Insurance Program (NFIP).

EFFECTIVE DATE: The data of issuance of the Flood Insurance Rate Map (FIRM), showing base (100-year) flood elevations, for the Borough of Westville, New Jersey.

ADDRESSEES: Maps and other information showing the detailed outlines of the flood-prone areas and the final elevations for the Borough of Westville, are available for review at Borough Hall, 114 Crown Point Road, Westville, New Jersey.

FOR FURTHER INFORMATION CONTACT: Mr. Richard Krimm, National Flood Insurance Program, (202) 755-5581 or Toll Free Line (800) 424-8872, Room 5270, 451 Seventh Street, SW., Washington, D.C. 20410.

SUPPLEMENTARY INFORMATION: The Federal Insurance Administrator gives notice of the final determinations of flood elevations for the the Borough of Westville, New Jersey.

This final rule is issued in accordance with section 110 of the Flood Disaster Protection Act of 1973 (Pub. L. 93-234), 87 Stat. 980, which added section 1363 to the National Flood Insurance Act of 1968 (Title XIII of the Housing and Urban Development Act of 1968 (Pub. L. 90-448), 42 U.S.C. 4001-4128, and 44 CFR 67.4(a)). An opportunity for the community or individuals to appeal this determination to or through the community for a period of ninety (90) days has been provided. No appeals of the proposed base flood elevations were received from the community or from individuals within the community.

The Administrator has developed criteria for flood plain management in flood-prone areas in accordance with 44 CFR Part 60.

The final base (100-year) flood elevations for selected locations are:

Source of Flooding	Location	Elevation, in feet national geodetic vertical datum
Big Timber Creek	Conrail—at centerline	10
	Interstate 295—at centerline	10
Tributary No. 1	Intersection of Woodbine Avenue and 4th Avenue.	10
	Intersection of Willow Road and High Street.	10

(National Flood Insurance Act of 1968 (Title XIII of Housing and Urban Development Act of 1968), effective January 28, 1969 (33 FR 17804, November 28, 1968), as amended; 42 U.S.C. 4001-4128; Executive Order 12127, 44 FR 19367; and delegation of authority to Federal Insurance Administrator, 44 FR 20963.)

Issued: June 1, 1979.

Gloria M. Jimenez,

Federal Insurance Administrator.

[FR Doc. 79-20632 Filed 7-5-79; 8:45 am]

BILLING CODE 4210-23-M

DEPARTMENT OF HEALTH, EDUCATION, AND WELFARE

Office of Education

45 CFR Part 116a

Financial Assistance to Local Educational Agencies To Meet the Special Educational Needs of Educationally Deprived and Neglected and Delinquent Children; Interpretive Rule

AGENCY: Office of Education, HEW.

ACTION: Interpretation of the amount of Federal funds that must be refunded to the Office of Education (OE) in cases in which a post-expenditure audit reveals a violation of the Title I, ESEA, comparability requirement.

SUMMARY: The Commissioner of Education is issuing this interpretation to clarify the amount of Federal funds that must be refunded to the Office of Education for noncompliance with the "comparability" requirement under Title I of the Elementary and Secondary Education Act of 1965, as amended. This interpretation identifies what expenditures are to be included in establishing the total amount to be recovered from a State educational agency (SEA) if a post-expenditure audit indicates that participating local educational agencies (LEAs) have failed to demonstrate compliance with the comparability provision.

EFFECTIVE DATE: This interpretation is expected to take effect 45 days after it is transmitted to Congress. The interpretation will be applied to all unsettled audits involving a violation of the Title I, ESEA, comparability requirement. Interpretations are transmitted to Congress several days before they are published in the Federal Register. However, the effective date is changed by statute if Congress disapproves the interpretation or takes certain types of adjournments. If you want to know the effective date of this interpretation, call or write the OE contact person.

ADDRESSES: Submit comments to Mr. James R. Ogura, Division of Education for the Disadvantaged, U.S. Office of Education, 400 Maryland Avenue, SW. (Room 3642, ROB-3), Washington, D.C. 20202.

FOR FURTHER INFORMATION CONTACT: Mr. James R. Ogura, (202) 245-8753.

SUPPLEMENTARY INFORMATION:

Background

In general, LEAs receive grants under title I to support programs that contribute particularly to meeting the special educational needs of educationally deprived children in school attendance areas with high concentrations of children from low-income families. The Commissioner makes payments to SEAs according to a formula based on the number of children from low-income families living in the school districts of each State. LEAs then apply to the State for title I grants.

A participating SEA provides an assurance to the Commissioner that it will approve only those applications that meet the title I requirements and that those requirements will be enforced. One of the requirements is that an LEA may receive title I funds only if State and local funds are used to provide in each project area services that are at least comparable to services being provided in non-project areas or schools (20 U.S.C. 2736(e)). This is called the comparability requirement.

The specific rules for complying with the comparability requirement are stated in § 116a.26 of the title I regulations. Under § 116a.26, the SEA shall require each LEA to submit a report containing sufficient information to enable the State to make a comparability determination.

This determination is based on—

(1) The number of children enrolled per instructional staff member; and

(2) The annual expenditure per child for salaries, less longevity payments, for instructional staff members.

Data for the report shall be collected no later than November 1 of each fiscal year and shall be filed with the SEA no later than December 1.

If any school serving a project area fails to demonstrate comparability, and if the LEA does not submit a revised report by December 1 showing that comparability has been achieved, the SEA shall suspend the approval of the project until a satisfactory report is submitted. Title I funds may not be used to pay for obligations during a period of suspension.

If the LEA does not submit a revised report demonstrating the achievement of comparability by March 31, the SEA, after notifying the applicant agency and providing opportunity for a hearing, shall finally disapprove the project and reallocate all unobligated funds in the applicant's allocation as of December 1.

Several post-expenditure audits of LEAs have raised questions as to the amount of funds OE should seek to recover in finding that an LEA failed to meet the comparability requirement in some of its schools served by title I. The title I statute requires full compliance with comparability as a precondition to the award of a title I grant. Therefore, in previous cases the Deputy Commissioner for the Bureau of Elementary and Secondary Education has demanded a refund of an LEA's total allocation if the comparability requirement was not met.

To date, none of these audits has reached final resolution. A recovery measure of the total title I allocation constitutes, in many cases, the imposition of a severe penalty since the amount to be recovered is not related to the degree of noncompliance with the comparability requirement.

At the same time, however, the law requires that the comparability requirement be met in each school served by title I. The Commissioner considers the title I funds spent in any school that failed to meet the comparability requirement to be misspent Federal funds. Therefore, the Commissioner has determined that OE should recover from the SEA the amount of title I funds expended to operate the programs in each school out of compliance with the comparability requirement, rather than the entire amount of title I funds spent by the district.

The appropriate period for recovering expenditures is the entire year, unless the audit specifies or the SEA is able to document that the period of noncomparability was a period less than the entire year.

This interpretation does not alter any of the actions required of a State agency by 45 CFR 116a.26(a) and 116a.26(f). Specifically, an SEA may not approve an application of an LEA unless that LEA has demonstrated compliance with the comparability requirement. In addition, the SEA shall suspend approval of an LEA's project if the LEA fails to demonstrate the achievement of comparability by December 1. If comparability is not demonstrated by March 31, the SEA, after proper notification and provision for a hearing, shall finally disapprove the project and reallocate unobligated funds to other complying LEAs.

Invitation to Comment

Although the Commissioner will be publishing a Notice of Proposed Rulemaking for title I in the near future, there is immediate need to publish an interpretive rule that the HEW Audit Agency and OE can apply to audits in process or those that remain unresolved. Since the final regulations for title I will include a section on the recovery of funds in a case in which a post-expenditure audit finds a violation of the comparability requirement, the

Commissioner invites interested persons to submit for consideration comments, suggestions, and recommendations on this interpretation. These comments should be submitted to Mr. James R. Ogura at the address above.

Comments must be received on or before August 20, 1979.

Interpretation

The Commissioner issues the following interpretation: If a local educational agency (LEA) fails to comply with the title I comparability requirement, the State educational agency (SEA) shall refund to the Office of Education (OE) the total amount of title I funds expended to operate the programs in each noncomparable school during the period of noncomparability. Included in the amount to be recovered are—

(1) All the expenditures directly attributable to the title I programs in each noncomparable school—direct costs—such as salaries, fringe benefits, materials and supplies, equipment, and transportation.

(2) The prorated share of all the title I expenditures that are made on a shared basis with other project schools;

(3) The prorated share of all districtwide title I costs—costs not directly attributable to any particular project school—including expenditures for supervision of instructional or supportive components, monitoring, evaluation, and training; and

(4) The prorated share of all the indirect costs attributable to the title I program.

The amount of shared costs under category (2) charged to each noncomparable school shall be based on the ratio of the direct costs charged to title I for that school (as determined under category (1)) to the total amount of direct costs for all the schools involved in the shared service or programs. For example, if noncomparable school A with direct costs of $30,000 and noncomparable school B with direct costs of $20,000 share in a title I service costing $10,000; school A is charged with $6,000 ($30,000/$50,000 or 60% × $10,000) and school B is charged with $4,000 ($20,000 or $50,000 40% × $10,000). School A is charged with a total of $36,000 for expenditures under categories (1) and (2) ($30,000 for direct costs plus $6,000 in shared costs), and school B is charged with a total of $24,000 under these categories ($20,000 for direct costs plus $4,000 in shared costs).

The prorated share of the districtwide costs under category (3) and the prorated share of the indirect costs under category (4) for each noncomparable school are based on the ratio of the total of the direct and shared costs under categories (1) and (2) for each noncomparable school to the total of the direct and shared costs for all project locations. Therefore, if the total of the direct and shared costs for all project locations in the LEA is $500,000, and noncomparable school A has a total of $36,000 in direct and shared costs, school A is charged with 7.2% ($36,000)/($500,000) of the total districtwide expenditures under category (3) and 7.2% of the total indirect costs under category (4). If the LEA has districtwide title I expenditures of $100,000 and districtwide title I indirect costs of $50,000, school A would be charged $7,200 (7.2% × $100,000) for districtwide expenditures under category (3) and $3,600 (7.2% × $50,000) for indirect costs under category (4).

Thus, the total amount of title I funds that must be refunded because school A did not meet the comparability requirement is $46,800 ($30,000 in direct costs, $6,000 in shared costs, $7,200 in districtwide expenditures, and $3,600 in indirect costs).

(20 U.S.C 1234a; 2736(e); 2835(b)).

(Catalog of Federal Domestic Assistance No. 13.428 Educationally Deprived Children—Local Educational Agencies)

Dated: June 19, 1979.

Ernest L. Boyer,

Commissioner of Education.

[FR Doc. 79-20740 Filed 7-5-79; 8:45 am]

BILLING CODE 4110-02-M

INTERSTATE COMMERCE COMMISSION

49 CFR Part 1033

[Amdt. No. 7 to Service Order No. 1240]

Chicago & North Western Transportation Co. Authorized To Operate Over Tracks of the Kansas City Southern Railway Co.

Decided: June 27, 1979.

Service date: June 29, 1979.

AGENCY: Interstate Commerce Commission.

ACTION: Emergency Order. Amendment No. 7 to Service Order No. 1240.

SUMMARY: This amendment extends an emergency order which authorizes the Chicago and North Western Transportation Company (CNW) to operate an unused yard of the Kansas City Southern Railway Company (KCS) at Kansas City, Missouri. Increases in traffic on the CNW in the Kansas City area have resulted in severe congestion and delays to shipments in the Kansas City terminals of that line. The adjoining Hennig Street Yard of the KCS is no longer needed by that line because of changes in operating patterns.

DATES: Effective 11:59 p.m., June 30, 1979, and continuing in effect until further order of this Commission.

FOR FURTHER INFORMATION CONTACT: J. Kenneth Carter, telephone (202) 275-7840.

Upon further consideration of Service Order No. 1240 (41 FR 15698, 48343; 42 FR 22367, 44546; 43 FR 9282; 43 FR 39795, 45586; and 44 FR 6729), and good cause appearing therefor:

It is ordered, § 1033.1240 Chicago and North Western Transportation Company Authorized To Operate Over Tracks of the Kansas City Southern Railway Company, Service Order No. 1240 is amended by substituting the following paragraph (e) for paragraph (e) thereof:

(e) *Expiration date.* The provisions of this order shall remain in effect until modified or vacated by order of this Commission.

Effective date. This amendment shall become effective at 11:59 p.m., June 30, 1979.

(49 U.S.C. (10304-10305 and 11121-11126).)

This amendment shall be served upon the Association of American Railroads, Car Service Division, as agent of all railroads subscribing to the car service and car hire agreement under the terms of that agreement, and upon the American Short Line Railroad Association. Notice of this amendment shall be given to the general public by depositing a copy in the Office of the Secretary of the Commission, at Washington, D.C., and by filing a copy with the Director, Office of the Federal Register.

By the Commission, Railroad Service Board, members Joel E. Burns, Robert S. Turkington and John R. Michael.

H. G. Homme, Jr.

Secretary.

[FR Doc. 79-20792 Filed 7-5-79; 8:45 am]

BILLING CODE 7035-01-M

49 CFR Part 1033

[Amdt. No. 8 to Service Order No. 1231]

Consolidated Rail Corp. Authorized To Operate Over Tracks of Louisville and Nashville Railroad Co.

Decided: June 27, 1979.

AGENCY: Interstate Commerce Commission.

ACTION: Emergency Order. Amendment No. 8 to Service Order No. 1231.

SUMMARY: Service Order No. 1231 authorizes the Consolidated Rail Corporation to operate over tracks abandoned by the Louisville and Nashville Railroad at Brazil, Indiana, for the purpose of providing rail service to shippers served by those tracks. The involved tracks are to be sold to Consolidated Rail Corporation. The order is printed in full in the Federal Register Volume 41 at page 8480. This amendment extends the order for six months.

DATES: Effective 11:59 p.m., June 30, 1979, and continuing in effect until further order of this Commission.

FOR FURTHER INFORMATION CONTACT: J. Kenneth Carter, telephone (202) 275-7840.

Upon further consideration of Service Order No. 1231 (41 FR 8480, 15414, 27729; 42 FR 3310, 34520; 43 FR 762, 28496; and 44 FR 874), and good cause appearing therefor:

It is ordered, § 1033.1231 Consolidated Rail Corporation Authorized To Operate Over Tracks of Louisville and Nashville Railroad Company, Service Order No. 1231 is amended by substituting the following paragraph (f) for paragraph (f) thereof:

(f) *Expiration date.* The provisions of this order shall remain in effect until modified or vacated by order of this Commission.

Effective date. This amendment shall become effective at 11:59 p.m., June 30, 1979.

(49 U.S.C. (10304-10305 and 11121-11126).)

This amendment shall be served upon the Association of American Railroads, Car Service Division, as agent of all railroads subscribing to the car service and car hire agreement under the terms of that agreement, and upon the American Short Line Railroad Association. Notice of this amendment shall be given to the general public by depositing a copy in the Office of the Secretary of the Commission, at Washington, D.C., and by filing a copy with the Director, Office of the Federal Register.

By the Commission, Railroad Service Board, members Joel E. Burns, Robert S. Turkington and John R. Michael.

H. G. Homme, Jr.,

Secretary.

[FR Doc. 79-20790 Filed 7-5-79; 8:45 am]

BILLING CODE 7035-01-M

49 CFR Part 1033

[Revised Service Order No. 1342]

Illinois Terminal Railroad Co. Authorized To Operate Over Tracks of Illinois Central Gulf Railroad Co.

DECIDED: June 27, 1979.

AGENCY: Interstate Commerce Commission.

ACTION: Emergency Order. Revised Service Order No. 1342.

SUMMARY: The Illinois Terminal Railroad Company (ITC) operates between Peoria, Illinois, and East St. Louis, Illinois, over lines of the Illinois Central Gulf (ICG). Revised Service Order No. 1342 authorizes the ITC to operate over the ICG between Springfield and Wood River, Illinois, via Carlinville, Illinois.

DATES: Effective 11:59 p.m., June 28, 1979, and continuing in effect until further order of this Commission.

FOR FURTHER INFORMATION CONTACT: J. Kenneth Carter, (202) 275-7840.

The line of the Illinois Central Gulf Railroad Company (ICG) between Springfield, Illinois, and Mont, Illinois, presently used by the Illinois Terminal Railroad Company (ITC) as a part of its main line between Springfield and East St. Louis, Illinois, via Litchfield, Illinois, has deteriorated and is inoperable. The ICG and the ITC have agreed to route ITC trains between Springfield and East St. Louis over other tracks of the ITC via the ICG line between Springfield and Wood River, Illinois, via Carlinville, Illinois, a distance or approximately 77.0 miles.

It is the opinion of the Commission that an emergency exists requiring operation of ITC trains over these tracks of the ICG in the interest of the public; that notice and public procedure are impracticable and contrary to the public interest; and that good cause exists for making this order effective upon less than thirty days' notice.

It is ordered, § 1033.1342 Illinois Terminal Railroad Company Authorized To Operate Over Tracks of Illinois Central Gulf Railroad Company.

(a) The Illinois Terminal Railroad Company (ITC) is authorized to operate over tracks of the Illinois Central Gulf Railroad Company (ICG) between Springfield, Illinois, and Wood River, Illinois, a distance of approximately 77.0 miles.

(b) *Application.* The provisions of this order shall apply to intrastate, interstate and foreign traffic.

(c) *Rates applicable.* Inasmuch as this operation by the ITC over tracks of the ICG is deemed to be due to carrier's disability, the rates applicable to traffic moved by the ITC over the tracks of the ICG shall be the rates which were applicable on the shipments at the time of shipment as originally routed.

(d) Nothing in this order shall be deemed to prejudge the decisions of the Commission in the applications of the ITC seeking permanent authority to operate over these tracks of the ICG.

(e) *Effective date.* This order shall become effective at 11:59 p.m., June 28, 1979.

(f) *Expiration date.* The provisions of this order shall remain in effect until modified or vacated by order of this Commission.

(49 U.S.C. (10304-10305) and 11121-11126).)

This order shall be served upon the Association of American Railroads, Car Service Division, as agent of the railroads subscribing to the car service and car hire agreement under the terms of that agreement and upon the American Short Line Railroad Association. Notice of this order shall be given to the general public by depositing a copy in the Office of the Secretary of the Commission at Washington, D.C., and by filing a copy with the Director, Office of the Federal Register.

By the Commission, Railroad Service Board, members Joel E. Burns, Robert S. Turkington and John R. Michael.

H. G. Homme, Jr.,

Secretary.

[FR Doc. 79-20793 Filed 7-5-79; 8:45 am]

BILLING CODE 7035-01-M

49 CFR Part 1033

[Amdt. No. 9 to Service Order No. 1242]

Kansas City Southern Railway Co. Authorized to Operate Over Certain Tracks of Southern Pacific Transportation Co.

Decided: June 27, 1979.

Service Date: June 29, 1979.

AGENCY: Interstate Commerce Commission.

ACTION: Emergency Order. Amendment No. 9 to Service Order No. 1242.

SUMMARY: Service Order No. 1242 authorizes the Kansas City Southern (KCS) to operate over tracks of the Southern Pacific Transportation Company (SP) at Lake Charles, Louisiana. The KCS drawbridge over the Calcasieu River at Lake Charles is unserviceable because of failure of the machinery used to open and close the span, isolating a major industrial district

served by the Kansas City Southern from the remainder of the system.

DATES: Effective 11:59 p.m., June 30, 1979, and continuing in effect until further order of this Commission.

FOR FURTHER INFORMATION CONTACT: J. Kenneth Carter, telephone (202) 275-7840.

Upon further consideration of Service Order No. 1242, (41 FR 18053, 31824, 48344; 42 FR 6584, 39221; 43 FR 4432, 34147, 39795; and 44 FR 6731) and good cause appearing therefor:

It is ordered, § 1033.1242 The Kansas City Southern Railway Company Authorized To Operate over Certain Tracks of Southern Pacific Transportation Company, Service Order No. 1242 is amended by substituting the following paragraph (e) for paragraph (e) thereof:

(e) *Expiration date.* The provisions of this order shall remain in effect until modified or vacated by order of this Commission.

Effective date. This amendment shall become effective at 11:59 p.m., June 30, 1979.

(49 U.S.C. (10304-10305 and 11121-11126).)

This amendment shall be served upon the Association of American Railroads, Car Service Division, as agent of all railroads subscribing to the car service and car hire agreement under the terms of that agreement, and upon the American Short Line Railroad Association. Notice of this amendment shall be given to the general public by depositing a copy in the Office of the Secretary of the Commission, at Washington, D.C., and by filing a copy with the Director, Office of the Federal Register.

By the Commission, Railroad Service Board, members Joel E. Burns, Robert S. Turkington and John R. Michael.

H. G. Homme, Jr.,

Secretary.

[FR Doc. 79-20789 Filed 7-5-79; 8:45 am]

BILLING CODE 7035-01-M

---

49 CFR Part 1033

[Amdt. No. 1 to Service Order No. 1351]

Massachusetts Central Railroad Corp. Authorized To Operate Over Tracks Fomerly Operated by Boston and Maine Corp., Robert W. Meserve and Benjamin H. Lacy, Trustees

Decided: June 27, 1979.

Service date: June 29, 1979.

AGENCY: Interstate Commerce Commission.

ACTION: Emergency Order. Amendment No. 1 to Service Order No. 1351.

SUMMARY: Service Order No. 1351 authorizes the Massachusetts Central Railroad Corporation to operate over tracks of the Boston and Maine, including interchange tracks connecting with the Consolidated Rail Corporation for the purpose of restoring rail service to these shippers.

DATES: Effective 11:59 p.m., June 30, 1979, and continuing in effect until further order of this Commission.

FOR FURTHER INFORMATION CONTACT: J. Kenneth Carter, telephone (202) 275-7840.

Upon further consideration of Service Order No. 1351, (44 FR 879) and good cause appearing therefor:

It is ordered, § 1033.1351 Massachusettes Central Railroad Corporation Authorized To Operate Over Tracks Formerly Operated by Boston and Maine Corporation, Robert W. Meserve and Benjamin H. Lacy, Trustees, Service Order No. 1351 is amended by substituting the following paragraph (g) for paragraph (g) thereof:

(g) *Expiration date.* The provisions of this order shall remain in effect until modified or vacated by order of this Commission.

Effective date. This amendment shall become effective at 11:59 p.m., June 30, 1979.

(49 U.S.C. (10304-10305 and 11121-11126).)

This amendment shall be served upon the Association of American Railroads, Car Service Division, as agent of all railroads subscribing to the car service and car hire agreement under the terms of that agreement, and upon the American Short Line Railroad Association. Notice of this amendment shall be given to the general public by depositing a copy in the Office of the Secretary of the Commission, at Washington, D.C., and by filing a copy with the Director, Office of the Federal Register.

By the Commission, Railroad Service Board, members Joel E. Burns, Robert S. Turkington and John R. Michael.

H. G. Homme, Jr.,

Secretary.

[FR Doc. 79-20791 Filed 7-5-79; 8:45 am]

BILLING CODE 7035-01-M

---

49 CFR Part 1033

[Amdt. No. 1 to Service Order No. 1350]

West Virginia Railroad Maintenance Authority Authorized To Operate Over Tracks Abandoned by the Chesapeake and Ohio Railway Co.

Decided: June 27, 1979.

Service date: June 29, 1979.

AGENCY: Interstate Commerce Commission.

ACTION: Emergency order. Amendment No. 1 to Service Order No. 1350.

SUMMARY: The Chesapeake and Ohio Railway Company (CO) has been authorized to abandon its line between North Caldwell, West Virginia, and Durbin, West Virginia. Service Order No. 1350 authorizes the West Virginia Railroad Maintenance Authority to commence operations on a portion of the CO line in order to provide uninterrupted rail service to shippers located on this line.

DATES: Effective 11:59 p.m., June 30, 1979, and continuing in effect until further order of this Commission.

FOR FURTHER INFORMATION CONTACT: J. Kenneth Carter, telephone (202) 275-7840.

Upon further consideration of Service Order No. 1350, (44 FR 877) and good cause appearing therefor:

It is ordered, § 1033.1350 West Virginia Railroad Maintenance Authority Authorized To Operate Over Tracks Abandoned by the Chesapeake and Ohio Railway Company, Service Order No. 1350 is amended by substituting the following paragraph (g) for paragraph (g) thereof:

(g) *Expiration date.* The provisions of this order shall remain in effect until modified or vacated by order of this Commission.

Effective date. This amendment shall become effective at 11:59 p.m., June 30, 1979.

(49 U.S.C. (10304-10305 and 11121-11126).)

This amendment shall be served upon the Association of American Railroads, Car Service Division, as agent of all railroads subscribing to the car service and car hire agreement under the terms of that agreement, and upon the American Short Line Railroad Association. Notice of this amendment shall be given to the general public by depositing a copy in the Office of the Secretary of the Commission, at Washington, D.C., and by filing a copy with the Director, Office of the Federal Register.

By the Commission, Railroad Service Board, members Joel E. Burns, Robert S. Turkington and John R. Michael.

H. G. Homme, Jr.,

Secretary.

[FR Doc. 79-20788 Filed 7-5-79; 8:45 am]

BILLING CODE 7035-01-M

DEPARTMENT OF THE INTERIOR

Fish and Wildlife Service

50 CFR Part 32

Opening of Medicine Lake National Wildlife Refuge, Montana, To Hunting

AGENCY: Fish and Wildlife Service, Interior.

ACTION: Special Regulation.

SUMMARY: The Director has determined that the opening to hunting of Medicine Lake National Wildlife Refuge is compatible with the objectives for which the area was established, will utilize a renewable natural resource, and will provide additional recreation opportunity to the public.

DATES: September 1, 1979, through December 31, 1979.

FOR FURTHER INFORMATION CONTACT: Jay R. Bellinger, Medicine Lake, MT 59247, Telephone Number AC 406-789-2305.

SUPPLEMENTARY INFORMATION:

§ 32.12 Special regulations; migratory game birds; for individual wildlife refuge area.

Migratory game bird hunting is permitted on the Medicine Lake National Wildlife Refuge, Montana, only on the area designated by signs as being open to migratory game bird hunting. This area comprises 10,163 acres and is delineated on maps available at the refuge headquarters and from the office of the Area Manager, U.S. Fish and Wildlife Service, Federal Building, Room 3035, 316 North 26th Street, Billings, MT 59101. Hunting shall be in accordance with all applicable State regulations subject to the following condition:

1. Vehicle travel is permitted only on designated trails.

§ 32.22 Special regulations; upland game birds and jackrabbits; for individual wildlife refuge areas.

Upland game bird and jackrabbit hunting is permitted on the Medicine Lake National Wildlife Refuge, Montana, only on the areas designated by signs as being open to upland game hunting. These areas comprising 10,163 acres are delineated on maps available at the refuge headquarters and from the office of the Area Manager, U.S. Fish and Wildlife Service, Federal Building, Room 3035, 316 North 26th Street, Billings, MT 59101. Hunting shall be in accordance with all applicable State regulations subject to the following condition:

1. Vehicle travel is permitted only on designated trails.

§ 32.32 Special regulations; big game; for individual wildlife refuge areas.

Big game hunting is permitted on the Medicine Lake National Wildlife Refuge, Montana, only on the areas designated by signs as being open to big game hunting. These areas comprising 10,163 acres are delineated on maps available at the refuge headquarters and from the office of the Area Manager, U.S. Fish and Wildlife Service, Federal Building, Room 3035, 316 North 26th Street, Billings, MT 59101. Hunting shall be in accordance with all applicable State regulations subject to the following conditions:

1. Unlimited vehicle travel is permitted only on county roads. In the hunting areas, vehicle travel is permitted only for the retrieval of deer on designated retrieval roads.

2. Horses may be used only for the retrieval of big game.

The provisions of this special regulation supplement the regulations which govern hunting on wildlife refuge areas generally which are set forth in Title 50 Code of Federal Regulations, Part 32. The public is invited to offer suggestions and comments at any time.

(Sec. 2, 33 Stat. 614, as amended; sec. 5, 43 Stat. 651; sec. 5, 45 Stat. 449; sec. 10, 45 Stat. 1224; sec. 4, 48 Stat. 402, as amended; sec. 4, 48 Stat. 451, as amended; sec. 2, 48 Stat. 1270; sec. 4, 80 Stat. 927; 5 U.S.C. 301, 16 U.S.C. 685, 725, 690d, 715i, 664, 718d, 43 U.S.C. 315a; 16 U.S.C. 460k, 668dd; sec. 2, 80 Stat. 926; 16 U.S.C. 668bb).

The U.S. Fish and Wildlife Service has determined that this document does not contain a major proposal requiring preparation of an Economic Impact Statement under Executive Order 11949 and OMB Circular A-107.

Jay R. Bellinger,

Refuge Manager.

June 22, 1979.

[FR Doc. 79-20817 Filed 7-5-79; 8:45 am]

BILLING CODE 4310-55-M

Proposed Rules

Federal Register
Vol. 44, No. 131
Friday, July 6, 1979

This section of the FEDERAL REGISTER contains notices to the public of the proposed issuance of rules and regulations. The purpose of these notices is to give interested persons an opportunity to participate in the rule making prior to the adoption of the final rules.

DEPARTMENT OF AGRICULTURE

Office of the Secretary

[7 CFR Part 1]

Rules of Practice Governing Cease and Desist Proceedings Under Section 2 of the Capper-Volstead Act

AGENCY: Office of the Secretary.

ACTION: Proposed Rulemaking.

SUMMARY: The proposed rules of practice published hereafter apply to review of cooperative marketing activities, and the conduct of cease and desist proceedings, under section 2 of the Capper-Volstead Act (42 Stat. 388, 7 U.S.C. 292).

The proposed rules were prepared in response to, and in conformance with, a report entitled "Undue Price Enhancement by Agricultual Cooperatives." Copies of this report may be obtained from the Information Staff, Economics, Statistics, and Cooperaties Service, Room 448, 500 12th Street S.W., Washington, D.C. 20250.

DATE: Comments must be received on or before September 7, 1979.

ADDRESS: Comments should be mailed to the Hearing Clerk, U.S. Department of Agriculture, Washington, D.C. 20250.

FOR FURTHER INFORMATION CONTACT: John C. Chernauskas, Office of the General Counsel, U.S. Department of Agriculture, Washington, D.C. 20250; telephone (202) 447-5935.

SUPPLEMENTARY INFORMATION: Section 1 of the Capper-Volstead Act (7 U.S.C. 291) grants a limited antitrust exemption to associations of producers (agricultural cooperatives). A cooperative association which fails to meet the requirements of section 1, or which engages in anti-competitive activities beyond the exemptions intended by the Act, may also be subject to antitrust enforcement under the jurisdiction of the Federal Trade Commission or the Department of Justice. In addition, the Secretary of Agriculture has responsibility to bring an administrative action if he has reason to believe that certain activities of a cooperative association—otherwise qualified for antitrust exemption under section 1 of the Act—unduly enhances the price of any agricultural product.

Section 2 of Capper-Volstead Act requires the Secretary to institute administrative cease and desist proceedings against an agricultural cooperative association if he has reason to believe that the association monopolizes or restrains trade in interstate or foreign commerce to such an extent that the price of any agricultural product is unduly enhanced therby. The instigating factor of a cease and desist proceeding under section 2 of the Act is "reason to believe" by the Secretary that undue price enhancement exists.

Information on activities by cooperative associations which may unduly enhance the price of an agricultural product may come from agencies within the Department of Agriculture, other federal agencies, or from interested members of the public. Such information will be reviewed and analyzed by a Capper-Volstead Monitoring Office under the direction of the Director of Economics, Policy Analysis and Budget. If the Director finds that there is reason to believe that cooperative practices are unduly enhancing a price of any agricultural commodity, cease and desist proceedings will be instituted under these rules.

Section 2 of the Capper-Volstead Act further provides for a factual and legal review of the Secretary's cease and desist order by a federal district court if judicial review and enforcement is requested by the association. Federal Court enforcement will also be instituted if the association fails to comply with the Secretary's order for thirty days. The proposed rules of practice incorporate due process elements of the Administrative Procedure Act as far as possible. The Secretary and the Cooperative Association are considered adverse parties in the proceedings. The facts will be independently and impartially considered by an Administrative Law Judge who will make a recommendation to the Judicial Officer. The Judicial Officer will enter the final agency decision. If the facts show undue price enhancement such as prohibited by section 2 of the Capper-Volstead Act, a cease and desist order will issue.

The following rules of practice, therefore, are proposed pursuant to the authority contained in section 2 of the Capper-Volstead Act (42 Stat. 388, 7 U.S.C. 292).

Dated: June 29, 1979.

Bob Bergland,

Secretary.

PART 1—ADMINISTRATIVE REGULATIONS

Subpart I—Rules of Practice Governing Cease and Desist Proceedings Under Section 2 of the Capper-Volstead Act

Sec.

§ 1.160 Scope and Applicability of Rules in This Part
§ 1.161 Definitions
§ 1.162 Institution of Proceedings
§ 1.163 The Complaint
§ 1.164 Answer
§ 1.165 Amendments
§ 1.166 Consent Order
§ 1.167 Prehearing Conference
§ 1.168 Procedure for Hearing
§ 1.169 Post-Hearing Procedure
§ 1.170 Decision by the Judicial Officer
§ 1.171 Intervention
§ 1.172 Motions and Requests
§ 1.173 Judges
§ 1.174 Filing; Service; Extension of Time; and Computation of Time
§ 1.175 Procedure Following Entry of Cease and Desist Order

Authority: 42 Stat. 388, 7 U.S.C. 291, 292.

§ 1.160. Scope and applicability of rules in this part.

The rules of practice in this part shall be applicable to cease and desist proceedings, initiated upon complaint by the Secretary of Agriculture, pursuant to § 2 of the Capper-Volstead Act.

§ 1.161. Definitions.

As used in this part, words in the single form shall be deemed to import the plural, and vice versa, as the case may require. The following terms shall be construed, respectively, to mean:

(a) "Act" means the Capper-Volstead Act, approved February 18, 1922, 42 Stat. 388, 7 U.S.C. 291, 292.

(b) "Complaint" means a formal complaint instituted by the Secretary of Agriculture requiring respondent to show cause why an order should not be made directing it to cease and desist from acts of monopolization or restraint

of trade, which result in undue price enhancement.

(c) "Complainant" means the Secretary of Agriculture, United States Department of Agriculture, or any officer(s) or employer(s) to whom authority has heretofore been delegated, or whom authority may hereafter be delegated, to act in his stead.

(d) "Respondent" means the cooperative association, or associations, against whom a complaint has been issued.

(e) "Hearing Clerk" means the Hearing Clerk, United States Department of Agriculture, Washington, D.C. 20250.

(f) "Judge" means any Administrative Law Judge appointed pursuant to 5 U.S.C. 3105 (the Administrative Procedure Act) and assigned to the Proceeding involved.

(g) "Judicial Officer" means an official of the United States Department of Agriculture delegated authority by the Secretary, pursuant to the Act of April 4, 1940 (7 U.S.C. 450c–450g and Reorganization Plan No. 2 of 1953 (5 U.S.C. 1976 ed., Appendix, p. 764), to perform the function involved (7 CFR 2.35), or the Secretary if he exercises the authority so delegated.

(h) "Decision" means the Judicial Officer's final decision, and includes (1) findings and conclusions and the reasons or basis therefor on all material issues of fact, law, or discretion, (2) orders, and (3) rulings on proposed findings, conclusions and order submitted by the parties. The Judicial Officer may adopt the recommendation of the Administrative Law Judge as his final decision.

(i) "Hearing" means that part of the proceeding which involves the submission of evidence before the Judge for the record in the proceeding.

(j) "Director" shall mean the Director of Economics, Policy Analysis and Budget.

(k) "Capper-Volstead Monitoring Office" shall mean the office, under the direction of the Director of Economics, Policy Analysis and Budget, which shall monitor the effect of cooperative marketing practices on short and long term price behavior of agricultural products, review and investigate information received from public and private sources, under the direction of the Director, with respect to section 2 of the Act.

(l) "Association" means a cooperative association, a federation of cooperatives, or other association of agricultural producers, as defined in section 1 of the Act.

§ 1.162. Institution of proceedings.

(a) *Filing of Information.* Any person having information that any agricultural association, as defined in the Capper-Volstead Act, is engaed in any practice which monopolizes or restrains trade in interstate or foreign commerce to such an extent that the price of any agricultural product is unduly enhanced by reason thereof, may submit such information to the Capper-Volstead Monitoring Office. Such information shall be in writing and shall contain a complete statement of facts detailing the price enhancement and the practices alleged.

(b) *Consideration of Information.* The Capper-Volstead Monitoring Office shall consider all information filed under part (a) of this section, and any other information which the office may obtain relating to a violation of section 2 of the Act. If the Director finds that there is reason to belive that any association monopolizes or restrains trade in interstate or foreign commerce to such an extent that the price of any agricultural product is unduly enhanced thereby he shall cause a compliant to be filed, requiring the association to show cause why an order should not be made directing the assoication to cease and desist from such monopolization or restraint of trade. The compliant shall be filed with the Hearing Clerk, who shall assign to the proceeding a docket number and effect service upon respondent.

§ 1.163. The complaint.

The Compliant shall state briefly all allegations of fact which constitute a basis for the proceeding, and shall designate a time and place for the hearing in the matter, which shall be at least 30 days after the service of the complaint upon the respondent.

§ 1.164. Answer.

(a) *Filing and Service.* Within 20 days after service of the complaint, or such other time as may be specified therin, the respondent shall file with the Hearing Clerk, an answer, signed by the respondent or his attorney. The answer shall be served upon the complainant by the Hearing Clerk.

(b) *Contents.* The answer shall clearly admit, deny, or explain each of the allegations of the complaint, and shall clearly set forth any affirmative defense.

(c) *Default.* Failure to file an answer shall constitute an admission of the allegations in the complaint, and may be the basis for a decision by the Secretary without oral hearing.

§ 1.165. Amendments.

Amendments to the complaint may be made prior to the filing of an answer in which case the time for filing the answer shall be extended 20 days or for other time agreed to by the parties. After the answer is filed, amendments to the complaint, or to the answer or other pleading, may be made by agreement of the parites or allowed at the discretion of the Judge. In case of an amendment which significantly changes the issues, the hearing shall, on the request of a party, be postponed or adjourned for a resonable period, if the Judge determines that such action is necessary to avoid prejudice to the party.

§ 1.166. Consent order.

At any time, complainant and respondent may agree to the entry of a consent order. Such order shall be entered by the Secretary, and become effective on the date specified therein.

§ 1.167. Prehearing conference.

Upon motion of a party or upon the Judge's own motion, the Judge may direct the parties to attend a prehearing conference when the Judge finds the proceeding would be expedited by prehearing discussions and could result in stipulations for the purpose of (a) simplifying the issues, (b) limitation of expert or other witnesses, and (c) such other matters as may expedite and aid in the disposition of the proceeding.

§ 1.168. Procedure for hearing.

(a) *Time and Place.* The oral hearing shall be held at such time and place as specified in the complaint, and not less than 30 days after service thereof. The time and place of the hearing may be changed for good cause, by the Judge, upon motion of either complainant or respondent.

(b) *Appearances.* The parties may appear in person or by counsel or by other representative. Persons who appear as counsel or in a representaive capacity must conform to the standards of ethical conducts required of practitioners before the courts of the United States.

(c) *Order of Proceeding.* Except as otherwise may be determined by the Judge, the complainant shall proceed first at the hearing.

(d) *failure to Appear.* If respondent, after being duly notified, fails to appear at the hearing, and no good cause for such failure is established, complainant shall present a *prima facie* case on the matters denied in the answer.

(e) *evidence.* (1) The testimony of witnesses at the hearing shall be upon oath or affirmation, reported verbatim,

and subject to cross-examination. Evidence which is immaterial, irrelevant, or unduly repetitious, or which is not of the sort upon which responsible persons are accustomed to rely, shall be excluded insofar as practicable.

(2) *Objections.* If a party objects to the admission of any evidence or to the limitation of the scope of any examination or cross-examination, he shall briefly state the grounds of such objections, whereupon an automatic exception will follow if the objection is overruled by the Judge. The ruling of the Judge on any objection shall be part of the transcript. Only objections made before the Judge may subsequently be relied upon in the proceeding.

(3) *Official Records or Documents.* An official record or document, if admissible for any purpose, shall be admissible in evidence without the production of the person who made or prepared the same, and shall be *prima facie* evidence of the relevant facts stated therein. Such record or document shall be evidenced by any official publication thereof, or by a copy certified by a person having legal authority to make such certification.

(4) *Exhibits.* Unless the Judge finds that the furnishing of multiple copies is impracticable, four copies of each exhibit shall be filed with the Judge unless the Judge finds that a greater or lesser number is desirable. A true copy of an exhibit may be substitute for the original.

(5) *Official Notice.* Official notice shall be taken of such matters as are judicially noticed by the courts of the United States and of any other matter of technical, scientific, or commercial fact of established character: *Provided,* That the opposing party shall be given adequate opportunity to show that such facts are erroneously noticed.

(6) *Offer of Proof.* Whenever evidence is deleted from the record, the party offering such evidence may make an offer of proof, which shall be included in the transcript. The offer of proof shall consist of a brief statement describing the evidence excluded. If the evidence consists of a brief oral statement or of an exhibit, it shall be inserted into the transcript in toto. In such event, it shall be considered a part of the transcript and record if the Judicial Officer decides that the Judge's ruling in excluding the evidence was erroneous and prejudicial. The Judge shall not allow the insertion of such excluded evidence in toto if the taking of such evidence will consume considerable time at the hearing. In the latter event, if the Judicial Officer decides that the Judge's ruling excluding the evidence was both prejudicial and erroneous, the hearing may be reopened to permit the taking of such evidence.

(7) *Affidavits.* Affidavits may be submitted into evidence, in lieu of witness testimony, only to the extent, and in the manner agreed upon by the parties.

§ 1.169 Post-hearing procedure.

(a) *Corrections to Transcript.* (1) At any time, but not later than the time fixed for filing proposed findings of fact, conclusions and order, or briefs, as the case may be, any party may file a motion proposing corrections to the transcript.

(2) Unless a party files such a motion in the manner prescribed, the transcript shall be presumed, except for obvious typographical errors, to be a true, correct, and complete transcript of the testimony given at the hearing and to contain an accurate description or reference to all exhibits received in evidence and made part of the hearing record, and shall be deemed to be certified without further action by the judge.

(3) At any time prior to the filing of the Judge's recommended decision and after consideration of any objections filed as to the transcript, the Judge may issue an order making any corrections in the transcript which the Judge finds are warranted, which corrections shall be entered onto the original transcript by the Hearing Clerk (without obscuring the original test).

(b) *Proposed Findings of Fact, Conclusions, Order and Briefs.* The parties may file with the Hearing Clerk proposed findings of fact, conclusions and order based solely upon the record and on matters subject to official notice, and briefs in support thereof. The Judge shall announce at the hearing a definite period of time within which these documents may be filed.

(c) *Judge's Recommended Decision.* The Judge, within a reasonable time after the termination of the period allowed for the filing of proposed findings of fact, conclusions and orders, and briefs in support thereof, shall prepare, upon the basis of the record and matters officially noticed, and shall file with the Hearing Clerk, a recommended decision.

(d) *Transmittal of Record to Judicial Officer.* As soon as practicable after the entry of the Judge's recommended decision, the Hearing Clerk shall assemble and transmit the entire record of the proceeding to the Judicial Officer for a final decision.

§ 1.170. Decision by the judicial officer.

(a) *Exceptions to Recommended Decision.* Within 20 days after service of the Judge's recommended decision, a party who disagrees with the decision, or any part thereof, or any ruling by the Judge or any alleged deprivation of the rights may file with the Hearing Clerk, such exceptions as the party may desire the Judicial Officer to consider. A brief may be filed in support of such exceptions. The exceptions and brief shall be served upon the opposing party.

(b) *Response to Exceptions.* within 20 days after the service of exceptions and any brief in support thereof, any opposing or intervening party may file with the Hearing Clerk a response in support of or in opposition to the exceptions, and in such response any relevant issue be raised.

(c) *Oral Argument.* A party may attach to exceptions or a response thereto, a request for an opportunity for oral argument before the Judicial Officer. Failure to make such request in writing, shall be deemed a waiver of oral argument. The Judicial Officer may grant, refuse, or limit any request for oral argument. Oral argument shall not be transcribed unless so ordered in advance by the Judicial Officer for good cause shown upon request of a party or upon the Judicial Officer's own motion.

(d) *Decision of the Judicial Officer.* As soon as practicable after consideration of exceptions and oral argument, if any, the Judicial Officer, upon the basis of and after due consideration of the record and any matter of which official notice is taken, shall render his decision. If the Judicial Officer decides that no change or modification of the Judge's recommended decision is warranted, the Judicial Officer may adopt the Judge's decision as the final order in the proceeding. The order of the Judicial Officer shall become effective on the date it is issued.

§ 1.171. Intervention.

Intervention under these rules shall not be allowed, except that, in the discretion of the Judicial Officer, or the Judge, any person showing a substantial interest in the outcome of the proceeding shall be permitted to participate in oral or written argument pursuant to sections 10 and 11 herein.

§ 1.172. Motions and requests.

(a) *General.* All motions and requests shall be filed with the Hearing Clerk, and shall be served upon the parties, except those made on record during the oral hearing. The Judge shall rule upon all motions and requests filed or made prior to the filing of the certification of

the transcript. Thereafter, the Judicial Officer will rule on any motions or requests.

(b) *Motions Entertained.* Any motion will be entertained except a motion to dismiss on the pleadings. All motions and requests concerning the complaint must be made within the time allowed for filing an answer.

(c) *Contents.* All written motions and requests shall state the particular order, ruling, or action desired and the grounds therefor.

(d) *Response to Motions in Request.* Within ten days after service of any written motion or request, or within such shorter or longer period as may be fixed by the Judge or the Judicial Officer the opposing party may file a response to the motion or request.

(e) *Certification to the Judicial Officer.* The submission or certification of any motion, request, objection, or other question to the Judicial Officer prior to the time when the Judge's certification of the transcript is filed with the Hearing Clerk, shall be made by and in the discretion of the Judge. The Judge may either rule upon or certify the motion, request, objection, or other question to the Judicial Officer, but not both.

§ 1.173. Judges.

(a) *Assignment.* No Judge shall be assigned to serve in any proceeding who (1) has any pecuniary interest in any matter or business involving in the proceeding, (2) is related within the third degree by blood or marriage to any party to the proceeding, or (3) has participated in the investigation preceding the institution of the proceeding or in determination that it should be instituted or in the preparation of the moving paper or in the development of the evidence to be introduced therein.

(b) *Disqualification of Judge.* (1) Any party to the proceeding may, by motion made to the Judge, request that the Judge disqualify himself and withdraw from the proceeding. Such motion shall set forth with particularity the alleged disqualification. The Judge may then either rule upon or certify the motion to the Judicial Officer, but not both.

(2) A Judge will withdraw from any proceeding in which he deems himself disqualified for any reason.

(c) *Conduct.* At no stage of the proceeding between its institution and the issuance of the final decision shall the Judicial Officer or the Judge discuss *ex parte* the merits of the proceeding with any person who is connected with the proceeding as an advocate or in an investigative capacity, or with any representative of such person: *Provided,* That procedural matter shall not be included with in the limitation: and *Provided further,* That the Judicial Officer or Judge may discuss the merits of the case with such a person if all parties to the proceeding, or their representatives, have been given an opportunity to be present. Any memorandum or other communication addressed to the Judicial Officer or a Judge, during the pendency of the proceeding, and relating to the merits therof, by or on behalf of any party or any interested person, shall be filed with the Hearing Clerk. A copy therof shall be served upon the parties to the proceeding, and, in the discretion of the Judge or the Judicial Officer, opportunity may be given to file a reply thereto within a specified period.

(d) *Powers.* Subject to review by the Judicial Officer as provided elsewhere in this part, the Judge, in any proceeding assigned to him shall have power to:

(1) Rule upon motions and requests;

(2) Set the time and place of any requested formal pre-hearing conference, adjourn the hearing from time to time, and change the time and place of hearing;

(3) Administrator oaths and affirmations;

(4) Examine witnesses and receive evidence;

(5) Admit or exclude evidence;

(6) Hear oral argument on facts or law;

(7) Do all acts and take all measures necessary for the maintenance of order and the efficient conduct of the proceeding.

(e) *Who May Act in the Absence of the Judge.* In the case of the absence of the Judge or upon his inability to act, the powers and duties to be performed by him under these Rules of Practice in connection with a proceeding assigned to him may, without abatement of the proceeding, be assigned to any other Judge.

§ 1.174. Filing; service; extensions of time; and computation of time.

(a) *Filing; Number of Copies.* Except as otherwise provided by the Judge or the Secretary, all documents or papers required or authorized by the rules in this part to be filed with the Hearing Clerk shall be filed in quadruplicate: *Provided,* That, where there are parties to the proceeding in addition to complainant and respondent, an additional copy shall be filed for each such additional party. Any document or paper, required or authorized under the rules in this part to be filed with the Hearing Clerk, shall, during the course of an oral hearing, be filed with the Judge.

(b) *Service; Proof of Service.* Copies of all such documents or papers required or authorized by the rules in this part to be filed with the Hearing Clerk, shall be served upon the parties by the Hearing Clerk, or by some other employee of the Department, or by a U.S. Marshall or his Deputy. Service shall be made either (1) by delivering a copy of the document or paper to the individual to be served or to a member of the partnership to be served, or to the president, secretary, or other executive officer or any director of the corporation or association to be served, or to the attorney or agent of record of such individual, partnership, corporation, organization, or association; or (2) by leaving a copy of the document or paper at the principal office or place of business or residence of such individual, partnership, corporation, organization, or association, or of his or its attorney or agent of record and mailing by regular mail another copy to each person at such address; or (3) by registering or certifying and mailing a copy of the document or paper, addressed to such individual, partnership, corporation, organization, or association, or to his or its attorney or agent of record, at his or its last known residence or principal office or place of business: *Provided,* That if the registered or certified document or paper is returned undelivered because the addressee refused or failed to accept delivery, the document or paper shall be served by remailing it by regular mail. Proof of service hereunder shall be made by the certification of the person who actually made the service: *Provided,* That if the service be made by mail, as outlined in paragraph (b)(3) of this section proof of service shall be made by the return post office receipt, in the case of registered or certified mail, or by the certificate of the person who mailed the matter by regular mail. The certificate and post office receipt contemplated herein shall be filed with the Hearing Clerk, and the fact of filing therof shall be noted in the record of the proceeding.

(c) *Extension of Time.* The time for the filing of any document or paper required or authorized under the rules in this part to be filed may be extended by the Judge prior to the filing of the certification of the transcript if there there is good reason for the extension. In all instances in which time permits, notice of the request for extension of the time shall be given to the other party with opportunity to submit views concerning the request.

(d) *Effective Date of Filing.* Any document or paper required or

authorized under the rules in this part to be filed shall be deemed to be filed at the time when it reaches the Department of Agriculture in Washington, D.C.; or, if authorized to be filed with an officer or employee of the Department at any place outside the District of Columbia, it shall be deemed to be filed at the time when it reaches the office of such officer or employee.

(e) *Computation of Time.* Saturdays, Sundays and Federal holidays shall be included in computing the time allowed for the filing of any document or paper: *Provided,* That when such time expires on a Saturday, Sunday or Federal holiday, such period shall be extended to include the next following business day.

§ 1.175. Procedure following entry of cease and desist order.

(a) *Request for Judicial Review.* An association subject to a cease and desist order may, within thirty days following the date of the order, request the Secretary to institute proceedings for judicial review of the order. Such request shall, to the extent practicable, identify findings of fact, conclusions of law, and any part of the order which the association claims are in error. The Secretary shall, therupon, file in the district court in the judicial district in which such association has its principal place of business, a certified copy of the order and of all records in the proceeding, including the request of the association, together with a petition asking that the order be affirmed and enforced.

(b) *Enforcement.* If an association subject to a cease and desist order fails or neglects, within thirty days of the date of the order, or at any time therafter, to obey such order, and has not made a request for judicial review as provided above, the Secretary shall file in the district court in the judicial district in which such association has its principal place of business a certified copy of the order and of all records in the proceeding, together with a petition asking that the order be enforced.

(c) *Notice.* The Secretary shall give notice of the filing of a petition for enforcement or review to the Attorney General, and to the association, by service of a copy of the petition.

[FR Doc. 79-20795 Filed 7-5-79; 8:45 am]

BILLING CODE 3410-90-M

Food and Nutrition Service

[7 CFR Part 226]

Child Care Food Program

Correction

In FR Doc. 79-20396, appearing at page 39078 in the issue for Tuesday, July 3, 1979 make the following correction:

On page 39093, under § 226.8, paragraphs (b) (1)-(7), (c) and (d) were inadvertently omitted; they should read as follows:

§ 226.8 State agency responsibilities for financial management.

* * * * *

(b) * * *

(1) Accurate, current, and complete disclosure of the financial results of Program activities in accordance with Federal reporting requirements.

(2) Records of Program operations which will adequately identify funds authorizations, obligations, unobligated balances, assets, liabilities, outlays, and income. State agencies shall maintain documentation of all claims against institutions under § 226.15. The records may be kept in their original form or on microfilm, and shall be retained for a period of three years after the date of submission of the Final Financial Status Report (Standard Form 269), except that, if audit findings have not been resolved, the records shall be retained beyond the three-year period as long as required for the resolution of the issues raised by the audit. Reports shall continue to be submitted on a regular basis after the end of the fiscal year to which they pertain until all unpaid obligations have been liquidated at which time the next report made should be marked "Final" and submission discontinued for the fiscal year.

(3) Records which identify disallowed costs and offsets resulting from FNS or other determinations and the disposition of these amounts. Procedures must be in effect to prevent State agency claims for these costs under program administration.

(4) Effective control and accountability by the State agency for all Program funds, property, and other assets acquired with Program funds. State agencies and subagencies or contractors shall adequately safeguard all such assets and shall assure that they are used for Program authorized purposes.

(5) Controls which minimize the time between the receipt of Federal funds from the United States Treasury and their payment to institutions. In the letter-of-credit system, the State agency shall make drawdowns from the United States Treasury through a United States Treasury Regional Disbursing Office in amounts as close as possible to their needs. Advances made by the State agency to institutions should conform to these same standards.

(6) Support and source documents for costs.

(7) Audit trails including identification of time periods, initial and summary accounts, cost determination and allocation procedures, cost centers or other accounting procedures to support any costs claimed for Program administration.

(c) *Management evaluations and audits.* State agencies shall provide FNS with full opportunity to conduct management evaluations (including visits to institutions) of all operations of the State agency under the Program, and shall provide OIG with full opportunity to conduct audits (including visits to institutions) of all operations of the State agency under the Program. Each State agency shall make available its records, including records of the receipt and expenditure of funds, upon request by FNS or OIG. OIG shall also have the right to make audits of the records and operations of any institution.

(d) *Reports.* Each State agency shall submit information to FNS on Program operations and the use of Program funds, on a quarterly basis, and information on the scope of Program operations on an annual basis.

BILLING CODE 1505-01-M

Agricultural Marketing Service

[7 CFR Ch. IX]

[Docket No. AO-385]

Grapefruit Grown in a Designated Area in California; Recommended Decision and Opportunity To File Written Exceptions to Proposed Marketing Agreement and Order

AGENCY: Agricultural Marketing Service, USDA.

ACTION: Proposed rule.

SUMMARY: This recommended decision proposes a marketing agreement and order regulating the handling of grapefruit grown in southeastern California. It provides interested persons an opportunity to file written exceptions concerning the recommendations made therein.

The proposed order would provide for: (1) establishment of an administrative committee of four California grapefruit producers, four

California grapefruit handlers, and one public member to assist the Secretary of Agriculture in administering the proposed marketing agreement and order program; (2) authorization for grade, quality, size and maturity regulations; (3) authorization for production research and marketing research and development projects, including advertising; and (4) provisions relative to definitions, expenses and assessments, inspection and certification, reporting requirements, and certain miscellaneous provisions included in all marketing agreement order programs. Consumers should benefit from an improved product and growers by an expanded market.

DATE: Written exceptions to this recommended decision may be filed by July 26, 1979.

ADDRESSES: Written exceptions should be filed in duplicate with the Hearing Clerk, Room 1077, South Building, U.S. Department of Agriculture, Washington, D.C. 20250, where they will be available for public inspection during business hours (7 CFR 1.27(b)).

FOR FURTHER INFORMATION CONTACT: Malvin E. McGaha, Chief, Fruit Branch, Fruit and Vegetable Division, AMS, USDA, Washington, D.C. 20250, Phone (202) 447-5975.

SUPPLEMENTARY INFORMATION: Prior documents in this proceeding: Notice of Hearing—Issued February 1, 1979, and published February 7, 1979 (44 FR 7729).

PRELIMINARY STATEMENT: Notice is hereby given of the filing with the Hearing Clerk of this recommended decision with respect to a proposed marketing agreement and order regulating the handling of grapefruit grown in a designated area in California.

The above notice of filing of the decision and of opportunity to file exceptions thereto is issued pursuant to the provisions of the Agricultural Marketing Agreement Act of 1937, as amended (7 U.S.C. 601 *et seq.*), (hereinafter referred to as the act), and the applicable rules of practice and procedure governing the formulation of marketing agreements and marketing orders (7 CFR Part 900).

The proposed marketing agreement and order, hereinafter referred to collectively as the "order", were formulated on the record of a public hearing held at Coachella, California, March 8-9, 1979. Notice of the hearing was published in the February 7, 1979, issue of the Federal Register. The notice set forth a proposed order submitted by the California members of the Administrative Committee, which locally administers Federal Marketing Order No. 909. That program currently regulates the handling of grapefruit grown in Arizona and in a designated area in California.

Material issues. The material issues presented on the record of the hearing are as follows:

(1) The existence of the right to exercise Federal jurisdiction in this instance;

(2) The need for the proposed regulatory program to effectuate the declared purposes of the act;

(3) The definition of the commodity and determination of the production area to be affected by the order;

(4) The identity of the persons and transactions to be regulated; and

(5) The specific terms and provisions of the order including:

(a) Definition of terms used therein which are necessary and incidental to attain the declared objectives of the act, and including all those set forth in the notice of hearing, among which are those applicable to the following additional terms and provisions;

(b) The establishment, maintenance, composition, powers, and duties of a committee which shall be the local administrative agency for assisting the Secretary in the administration of the order;

(c) The authority to incur expenses and the procedure to levy assessment;

(d) The authority to establish production and marketing research, and market development projects;

(e) The method for regulating the handling of grapefruit grown in the production area;

(f) The authority to exempt from regulation grapefruit used for such special purpose, in such quantity, or in such type of shipment, as the committee with the approval of the Secretary, may specify;

(g) The authority for inspection and certification of shipments of regulated grapefruit;

(h) The establishment of reporting and related recordkeeping requirements;

(i) The requirement of compliance with all provisions of the order and with regulations issued pursuant thereto; and

(j) Additional terms and conditions as set forth in § ——.50 through § ——.58 of the Notice of Hearing published in the Federal Register of February 7, 1979 (44 FR 7729), which are common to all marketing agreements and marketing orders, and certain other terms as set forth in § ——.59 through § ——.61 which are common to marketing agreements only.

Findings and conclusions. The following findings and conclusions on the material issues are based on the record of the hearing:

(1) Grapefruit grown in the production area (the area comprised of Imperial County, that part of San Bernardino County situated east of a line due north and south through Rice, that part of Riverside County situated east of a line due north and south through the Post Office in Whitewater, and that part of San Diego County situated east of a line due north and south through the Post Office in Julian) are marketed throughout the United States, as well as in several foreign countries. The major markets in the U.S. for such grapefruit are in California and other western states, where it competes with grapefruit produced in Arizona, Texas and Florida.

Grapefruit produced in the area are prepared for shipment in intrastate and interstate commerce in essentially the same manner. In addition, individual lots of grapefruit, as they move to market, tend to be similar in that they are sold by type of pack and variety conforming with a specific grade, brand, count, size, or minimum diameter. Generally, no handler supplies any single segment of the market to the exclusion of every other handler. Therefore, all grapefruit grown in the production area which are handled in fresh fruit channels exert an influence on all other handling of such grapefruit in fresh form. Sellers of grapefruit, as with other commodities, endeavor to transact their business so as to secure maximum returns for the grapefruit they have for sale. The sellers of grapefruit continually survey all accessible markets so as to take advantage of the best possible opportunity to market the fruit. Markets within the production area provide opportunities to dispose of grapefruit in the same manner as markets outside such area. The sale of a quantity of grapefruit within such area exerts influence on all other sales of grapefruit. Buyers generally have access to market information, and knowledge of prices in one area is used when bargaining for grapefruit in another area. Hence, it is concluded that any movement and sale of grapefruit grown in the production area, whether to a market within the production area or outside thereof, affect prices for all grapefruit grown in the production area. Therefore, it is found that all handling of grapefruit grown in the production area is either in the current of interstate or foreign commerce or directly burdens, obstructs, or affects such commerce; and, except as hereinafter otherwise provided, all handling of grapefruit

grown in the production area should be subject to the act and the order.

(2) Grapefruit production in the production area during the 1977–78 season totaled 8,393,000 cartons (32 pounds), of which 2,550,000 were marketed in fresh domestic markets, 1,233,000 in fresh export markets, and most of the remaining 4,620,000 in processed products markets. Grapefruit production in the production area over the past five seasons (1973–74 through 1977–78) averaged 7,553,000 cartons. Of this amount, 2,620,400 were shipped fresh to domestic markets, 865,000 fresh to export markets, and most of the remaining 4,067,600 to processing outlets. Total fresh shipments over this 5-season period averaged about 46 percent of the crop. Currently, slightly over one-half of the grapefruit crop produced in the area is of the "pink or red" variety, and the rest of the "white or golden" variety. Grapefruit production in the area now constitutes about 5 percent of total production in the United States. There are now about 180 grapefruit producers in the production area, and their fruit is packed and marketed by 10 handlers.

Grapefruit produced in the proposed production area along with grapefruit produced in Arizona have been covered by Federal Marketing Order No. 909 (M.O. 909) since 1941. Until recently, grapefruit from the area covered in both states were subject to the same grade and size regulations under the program. In the past two years producers in California have favored regulation under the program but Arizona producers have not. In the absence of marketing order regulations, grapefruit shipments were subject only to a minimal standard specified in the applicable State agricultural code. The record indicates that the standard applied to the California grapefruit was inadequate.

There are basic differences in the character of the grapefruit produced in the California area as contrasted with the grapefruit produced in Arizona. Some differences may be attributable to differences of soil and climate. Indications are that the areas in Arizona where grapefruit is produced are more subject to freezing temperatures which cause injury to grapefruit than is the California grapefruit area. In any case, the record shows that fruit produced in Arizona may tend to have coarser, thicker rinds, and be more disposed toward a "sheep nose" shape than grapefruit produced in California. These characteristics add to the difficulty in meeting grade requirements. Arizona producers apprarently feel that their marketing objectives can be met under provisions of a State program currently in effect, and they have indicated that they do not wish their grapefruit to be subject to a Federal marketing order.

The record indicates that failure to invoke the regulatory provisions of M.O. 909 has allowed the shipment of marginally acceptable grapefruit from the California production area and this has had a serious impact on the industry. Moreover, attempts to increase movement and consumption through merchandising and promotion efforts under a State program have been hampered by the lack of quality control designed to present to the consumer grapefruit of desirable quality. At the hearing it was stressed that in order to reverse this situation and improve returns, the image of California grapefruit must be improved by making available to consumers a better quality, more uniform product, on a consistent basis.

Grapefruit produced in the other major grapefruit producing States are required to meet grade, quality, size and maturity standards under Federal and State marketing programs. In addition, these States conduct marketing research and development projects for grapefruit under such programs. Production area grapefruit compete in the marketplace with grapefruit produced in these other areas. Grapefruit from the production area which do not meet a desirable level of grade, quality, or size are at a disadvantage in gaining consumer acceptance. Such grapefruit tend to discourage consumption, depress prices for all grapefruit and contribute to disorderly marketing conditions for acceptable quality fruit. Provision for grade, quality, size and maturity requirements and for production and marketing research and market development projects, as contemplated under the proposed order, would provide a means to enhance consumer acceptance, increase consumption, stabilize the market and increase returns to producers for grapefruit grown in the proposed production area.

Therefore, it is concluded that the establishment of the order, providing for the regulation of grade, quality, size and maturity of shipments of grapefruit grown in such area, is necessary to effectuate the declared purposes of the act. Also, the establishment and maintenance in effect of minimum standards of quality and maturity when prices are above the parity level, should effectuate orderly marketing of grapefruit and be in the public interest. Likewise, it is concluded that provision should be made in the order to enable the establishment of production and marketing research and development projects designed to assist, improve or promote the marketing, distribution, consumption, and efficient production of grapefruit.

(3) The term "grapefruit" should be defined in the order to identify the commodity to be regulated thereunder. Such term, as used in the order, refers to all varieties of grapefruit classified botanicallyas Citrus paradisi, MacFayden, grown in the production area. The definition of grapefruit should include any varieties of grapefruit that may be developed and produced in the production area in the future. Grapefruit are readily distinguishable from other fruits, and the term has a specific meaning to all producers and handlers of the commodity in the production area.

A definition of the term "production area" should be incorporated in the order to designate the specific area in which the grapefruit to be regulated are grown. Such term should be defined to mean the following counties or their segments in the State of California described as follows: Imperial County; that part of San Bernardino County situated east of a line due north and south through Rice; that part of Riverside County situated east of a line due north and south through the Post Office in Whitewater; and that part of San Diego County situated east of a line due north and south through the Post Office in Julian.

The grapefruit produced within this area are similar in character and move freely within such area and to markets outside thereof and it would be impracticable to limit coverage to a lesser area. Moreover, while there are areas within this production area which are not planted to grapefruit, many nonplanted areas are suitable for producing grapefruit, and if such area were excluded and later planted to grapefruit, this production would be indistinguishable from the grapefruit which are subject to the order. This would result in compliance problems and impede the effectiveness of the program. The boundaries of the production area are appropriately delineated to make it clear to growers and handlers of the grapefruit which are subject to the order. Hence, it is concluded that the production area, as hereinafter defined, is the smallest regional production area that is practicable consistently with carrying out the declared policy of the act.

(4) The term "handler" should be defined in the order to identify the persons who are subject to regulation under the order. Since it is the handling

of grapefruit that is regulated, the term "handler" should apply to all persons who place grapefruit in the current commerce by performing any of the activities within the scope of the term "handle", as hereinafter described. In other words, any person who is responsible for the sale, shipment, consignment, delivery, or transportation of grapefruit, or who in any other way places grapefruit in the current commerce, should be a handler under the order and be required to carry out such activities in accordance with the order provisions.

The term "handle" should be defined, as hereinafter set forth, to identify those activities that it is necessary to regulate in order to effectuate the declared policy of the act. Such activities include all phases of selling and transporting which place grapefruit in the channel of commerce within the production area or from the production area to any point outside thereof. The performance of any one or more of these activities, such as selling, consigning, delivering, or transporting grapefruit (except as specifically exempted) by any person, including a producer, either directly or through others, should constitute handling. In order to effectuate the declared policy of the act, each such person should be required, except as hereinafter indicated, to limit such handling of grapefruit to fruit which conforms to the applicable requirements under the order.

The sale of grapefruit on the tree should not be considered "handling", as handling begins after the fruit is picked from the tree. After picking, it is usual for grapefruit to be sorted, graded, packed, or otherwise prepared for market. Such preparation generally involves transportation to a packinghouse where equipment and facilities are available for sorting, grading, and packing. The producer in such instances properly relies on the person preparing the grapefruit for market to see that the fruit which is thereafter shipped meets all applicable requirements for marketing. Moreover, such activities are, of necessity, preliminary to placing the grapefruit in marketing channels. It would not be practicable and would unnecessarily complicate the administration of the order to endeavor to require persons engaged in the preparation of grapefruit for market to meet the requirements of regulations under the program until after such preparation. Therefore, such activities should be excluded from the definition of "handle".

Transportation by a common or contract carrier of grapefruit owned by another person should not be considered as making such a carrier a "handler" because, in such instances, the carrier is performing a service for hire. Of course, if the carrier is the owner of the grapefruit being transported, such carrier would be a handler the same as any other person who may primarily be engaged in another business—such as a producer or retailer—but at times is also a handler. Also, the order should permit exemption to the extent necessary to allow the transportation of grapefruit for preparation for fresh market from the location where grown to a packinghouse within the production area, or to a packinghouse outside the production area for such preparation. However, movement to a facility outside the production area should be permitted only if a special handling permit has been issued under §——.45. No such exemption should apply to the further handling of grapefruit, and any person who subsequently sells, consigns, delivers, or transports such grapefruit or causes such grapefruit to be sold, consigned, delivered, or transported within the production area or between the production area and any point outside thereof would be the handler of such grapefruit and subject to order requirements. As hereinafter specified, no person should be permitted to move grapefruit outside the production area for preparation for market except in accordance with rules and regulations designed to assure that any such grapefruit complies with order provisions prior to entering channels of trade.

Grapefruit may be sold, after packing, at the grove where grown or at a packinghouse to truckers and others who transport the grapefruit from such points to markets within and outside the production area. The sale or delivery of grapefruit to such persons, and the subsequent movement to market, are handling transactions. Any person who engages in any such transaction, whether producer, packinghouse operator, trucker, or others, would therefore be a handler under the order by virtue of such transaction. Such persons should have the responsibility of assuring themselves that the grapefruit they handle meet all applicable regulations in effect at the time of handling. Compliance with the regulations which are authorized by the order can readily be determined by the person who is responsible for grading and otherwise preparing the grapefruit for market. The primary responsibility for determining whether a particular lot of grapefruit conforms to the applicable regulations should rest with the person who places such lot, or causes it to be placed, in the current of commerce. In most cases, such person will be the one who was responsible for grading and preparing the grapefruit for market. However, all subsequent handlers also should be responsible for seeing that any regulations applicable to the grapefruit are met at the time such persons handle the grapefruit. This can readily be ascertained by determining that the grapefruit have been inspected and certified as meeting such regulations or by having them inspected.

As all handling of grapefruit is in interstate or foreign commerce, or directly burdens, obstructs or affects such commerce, it is concluded that, except as indicated herein and as specifically exempted by the act and order, all sales, shipment, consignment, delivery, or transportation of grapefruit within the production area or between the production area and any point outside thereof should be subject to the order and any regulations issued pursuant thereto.

(5)(a) Certain terms applying to specific individuals, agencies, legislation, concepts, or things are used throughout the order. These terms should be defined for the purpose of designating specifically their applicability and establishing appropriate limitations on their respective meaning whenever they are used.

The definition of "Secretary" should include not only the Secretary of Agriculture of the United States, the official charged by law with the responsibility for programs of this nature, but also, in order to recognize the fact that it is physically impossible for the Secretary to perform personally all functions and duties imposed by law, any other officer or employee of the United States Department of Agriculture who is, or who may hereinafter be authorized to act for the Secretary.

The definition of "act" provides the correct legal citation for the Agricultural Marketing Agreement Act of 1937, as amended, the statute pursuant to which the proposed regulatory program is to be operative, and avoids the need for referring to the citation each time it is used.

The definition of "person" should follow the definition of that term as set forth in the act, and will insure that it will have the same meaning as it has in the act.

A definition of "committee" should be incorporated in the order to identify the administrative agency established under the provisions of the program. Such committee is authorized by the act and

the definition thereof, as hereinafter set forth, is merely to avoid the necessity of repeating its full name each time it is used.

The term "producer" should be synonymous with "grower" and should be defined to include any person who produces grapefruit for market and who has a proprietary interest therein. A definition of the term producer is necessary for such determinations as eligibility to vote for, and to serve as, a member or alternate member of the California Grapefruit Administrative Committee and voting in referenda. The term "producer" should, therefore, be defined as hereinafter set forth.

The term "fiscal period" should be defined to set forth the period which the annual financial records of the California Grapefruit Administrative Committee—the agency which will administer the program locally—are to cover. At the present time, it is desirable to establish a 12-month period ending the last day of August of each year as a fiscal period. Such a period would fix the end of one fiscal period and beginning of the next at a time of relative inactivity in the marketing of grape fruit. Also, the beginning of the fiscal period would coincide with the beginning of the term of office of members and alternates, as hereinafter discussed, and this would allow sufficient time prior to the time shipments begin for the committee to organize and develop information necessary to its functioning during the ensuing year. Moreover, it would insure that a minimum of expenses would be incurred during a fiscal period prior to the time assessment income is available to defray such expenses. However, it may develop that for convenience of management or for other good and sufficient reasons not now apparent, that it would be desirable to establish a fiscal period other than one ending the last day of August. Hence, authority should be included in the order to provide for such establishment subject to approval of the Secretary pursuant to recommendation of the committee. Therefore, it is concluded that such term should be defined as hereinafter set forth to provide this flexibility.

The term "variety" should be defined in the order, as hereinafter set forth, since it is proposed to provide authority for different regulations, assessment rates, and research promotion, and advertising activities for different varieties of grapefruit. Such provisions would recognize the different characteristics of the varieties. Grapefruit grown in the production area fall into 2 varietal classifications by definition—"white or golden" grapefruit and "red or pink" grapefruit. Each of these varities are distinguishable one from another by the internal and external characteristics of the fruit. From a market standpoint, however, they are competitive one with the other. It is necessary, therefore, that all varieties of grapefruit, including those that may be developed in the future, be subject to regulation under the order.

(b) It is desirable to establish an agency to administer the order under and pursuant to the act, as an aid to the Secretary in carrying out the purpose of the order and the declared policy of the act. The term "California Grapefruit Administrative Committee" is a proper identification of the agency and reflects the character thereof. It should be composed of 9 members, of whom 4 should represent producers, 4 should represent handlers, and 1 should represent the public. Alternate members should be provided to act in the place and stead of the members. Such committee would be large enough to provde representation to all segments of the industry. At the same time, it is of such size that it can operate effectively and efficiently. The foregoing division of members between producers and handlers would provide suitable producer representation and handler experience and information. The provision for 4 producer members recognizes the fact that the program is designed to benefit producers. The provision for 4 handler members tends to give balance to the committee by providing the handler experience and marketing information necessary to the development of economically sound regulation of grapefruit shipments. The public member would be in a position to express the consumer's viewpoint in the contemplation of actions by the committee.The 4 producer members of the committee should be referred to as "producer members", the 4 handler members as "handler members" and the public member as the "public member". The 4 producer members, the 4 handler members and the one public member shall be selected from the production area at large, except as hereinafter provided. Such a selection process would be appropriate because the production area is relatively small, and producers have knowledge of crop and growing conditions throughout the production area, and handlers have knowledge of marketing conditions through the production area.

Each producer member of the committee, and alternate, should be a producer, or officer or employee of a producer, and to the extent practicable not a handler or director or employee exercising a supervisory or a managerial function of a handler. There are producers in the production areas which are companies, either incorporated or otherwise, and a company, as such, would be precluded from having representation on the committee unless officers and employees of producers were permitted to vote for and serve as producer members of the committee. A person who is a producer or an officer or employee of a producer should be acquainted with the problems of producing grapefruit in the production area.

Each handler member of the committee and alternate should be a handler, or an officer or employee of a handler. There are handlers in the production area which are cooperatives or companies, either incorporated or otherwise, and a cooperative or company, as such, would be precluded from having representation on the committee unless officers and employees of handlers were permitted to vote for and serve as handler members of the committee. Persons who are handlers or an officer or employee of a handler would be acquainted with the problems of handling grapefruit grown in the production area and could contribute substantially in making decisions required under the order.

The order should provide that at least one producer alternate member shall be a producer from outside that portion of Riverside County which is situated east of a line drawn due north and south through the post office at Whitewater and west of a line drawn due north and south through Chiriaco Summit, so that this area within the production area is always afforded representation on the committee. It should not be necessary, that this alternate member be of the same affiliation (cooperative or independent), as the member for whom he or she is an alternate.

Membership and representation on the committee should reflect the situation existing in the production and marketing of grapefruit in the production area. There are currently 11 packinghouses operated by 10 handlers which market most of the grapefruit produced by the producers in the production area. Five of these are affiliated with cooperative marketing organizations (cooperatives), and 6 are not affiliated with cooperatives (independents). Currently, the cooperatives market 20–25 percent of the fresh grapefruit, while the independents market the rest. These marketing organizations, both cooperative and independent, market

grapefruit produced throughout the production area. The interests of these marketing organizations, therefore, are closely identified with producer interests. Furthermore, such organizations must consider marketing probems affecting the production area as a whole. It is appropriate, therefore, in view of the institutional structure of the marketing function in the production area, to provide a method of nominating and selecting producer and handler members on the committee who will reflect marketing structure and composition of the industry between cooperatives and independents.

Consistent therewith the order should provide that, to the extent practicable, allocations of producer member positions shall be at least one member to represent producers affiliated with cooperative marketing organizations (cooperative producers) and at least one member to represent producers who are not so affiliated (independent producers). Further, it should provide that a second producer member shall be allocated to any group (cooperative or independent) which during the fiscal period preceding the fiscal period in which nominations are made, produced more than 37.5 percent but not more than 62.5 percent of the total production of grapefruit; and any group whose production is more than 62.5 percent shall be allocated a third member.

Likewise the order should provide that allocation of handler member positions shall be at least one member to represent handlers who are cooperative marketing organizations (cooperative handlers), and at least one member to represent handlers who are not cooperative marketing organizations (independent handlers). Further, it should provide that a second handler member shall be allocated to any group (cooperative or independent) which during the fiscal period preceding the fiscal periods in which nominations are made, handled more than 37.5 percent, but not more than 62.5 percent of the total quantity of grapefruit handled by all handlers; and any group which handled more than 62.5 percent shall be allocated a third member.

In addition to the eight grower and handler members of the committee, there should be an individual to serve as public member of the committee, and another to serve as alternate. In recent years the general public has manifested a greater interest in regulatory and other programs which are carried out under auspices of government. While committee meetings are open to the public, a public member on the committee could perform a valuable service to the committee and the general public by providing comments in deliberations which reflects the views of consumers and the public generally. Such member also would be valuable as an intermediary in explaining to consumers what the program is about and the rational of actions taken. The nominee for the public member position should be a person who does not represent an agricultural interest and who is not financially interested in or associated with the production, processing, financing, or marketing of grapefruit.

The testimony indicates that the public member should be a resident of the production area, so that this individual would find it convenient to attend committee meetings on a regular basis, and would have an opportunity to become and remain familiar with the production and marketing of grapefruit in the production area.

The testimony also indicates that the public member should have the same rights and privileges as the producer and handler members, including voting, so that this person would be a fully participating member in committee deliberations.

The committee should specify in administrative rules issued, with approval of the Secretary, the additional qualifications which a person should possess to be eligible for the public member and alternate member positions. Nominations for public member and alternate member on the committee should be submitted to the Secretary by the committee consistent with with a nomination procedure established by the committee and approved by the Secretary.

The notice of hearing proposed that the nomination and selection of a public member and alternate to serve on the committee be permissive. However, in view of the affirmative testimony relating to the merits of having a public member on the committee and current USDA policy, it is concluded that the order should provide for a public member and alternate on the committee.

It was testified without opposition that changes in the industry may make it desirable, to assure equitable representation, to change the size or composition of the committee, or the representation, or limit the number of positions that may be filled by a particular organization at some future time, and the order should provide for this. It is therefore concluded that authority should be included whereby through the establishment of appropriate rules the committee may, with the approval of the Secretary, change the number of producer or handler member positions on the committee; reallocate membership between cooperatives and independents; and, if deemed desirable, limit the number of positions that may be filled by persons affiliated with the same packinghouse or handling organization. In the event any such change is make, the order should allow appropriate changes in the quorum and voting requirements contained in § .30.

The order should specify a term of office for members and alternates of the committee. The record indicates that a desirable term would be 2 fiscal periods beginning September 1 of an odd numbered year and ending on the second succeeding August 31. In the event that the recommended order becomes effective in 1979 after August 31 or in 1980, the term of office of the initial committee members should commence on the date such members are selected by the Secretary and end August 31, 1981. A term of office beginning September 1 would begin sufficiently in advance of the time when grapefruit harvesting begins to permit the committee to meet and organize, consider the prospective crop and marketing situation, make necessary estimates and analyses, develop an appropriate marketing policy, and consider the need for any administrative changes.

Provision should be made in the order for the Secretary to change the term of office pursuant to a recommendation from the committee. The order contains provisions for changing the fiscal period. If the fiscal period is changed, it would likely be desirable for the term of office of committee members to be changed to coincide with the new fiscal period.

So there will be a committee at all times and since it is possible that new committee members may not be appointed immediately upon the expiration of the term of existing members, or that some may fail to qualify immediately, provision should be made for members and alternates to continue to serve until their successors are selected and have qualified. This is necessary to ensure continuity of committee operations.

As the committee will not be in a position to act until after the selection by the Secretary of its initial members, the order should provide that the names of nominees for the initial members and alternates may be submitted to the Secretary by individual producers and handlers, or that nominations for such positions may be made at meetings of producers and handlers of each group (cooperative and independents).

Any such nominations should be filed with the Secretary no later than the effective date of the order, should the order be promulgated. In the event no such nominations are made, the Secretary should be allowed to select the initial committee members from among qualified persons.

Nomination meetings for the purpose of designating nominees for successor members and alternates should be scheduled by the committee at such times and places as will result in maximum grower and handler participation. The committee should adopt such procedural rules as may be deemed necessary to assure that such meetings will be conducted in an orderly and uniform manner.

Meetings for the purpose of designating nominees for successor members of the committee and their alternates should be held sufficiently in advance of the expiration of the term to allow selection of a successor prior to the start of the new term. Consequently, meetings of producers and handlers should be held not later than July 1 of each odd numbered year to facilitate this.

The order should provide that only producers, including duly authorized representatives of producers, who are present at nomination meetings, may participate in nominations. Each producer should be entitled to cast only one vote for each nominee regardless of the number of business units in which that producer may be involved. A producer, including officers or employees of such a producer, should be eligible to fill only one position on the committee. The order should provide that the committee may nominate prospective persons for the public member and alternate member positions for consideration by the Secretary. The order also should provide that if a person is both a producer and handler of grapefruit, such person may vote either as a producer or as a handler, but not as both.

The order should provide that, to the extent practicable, only producers affiliated with cooperative marketing organizations shall vote in elections of nominees for positions allocated to producers affiliated with such organizations; and only producers not so affiliated shall vote in elections of nominees for positions allocated to producers not so affiliated. It should also provide that in the event some of a producer's grapefruit is handled through a cooperative marketing organization and some is handled through an organization that is not a cooperative marketing organization, such producer should be eligible to participate only with the group (cooperative or independent) in which such producer's major volume of grapefruit is handled.

Only eligible handlers, including duly authorized employees or officers of such handlers, who are present at nomination meetings should be permitted to participate in the nomination and election of handler members and their alternates since the handlers should be the ones to indicate the persons they desire to represent them on the committee. Also, each handler should be allowed to cast only one vote for each nominee to be selected. To the extent practicable, handlers affiliated with cooperative marketing organizations should elect nominees for positions allocated to handlers affiliated with such organizations, and handlers not so affiliated should vote for nominees for positions allocated to handlers not so affiliated.

If reapportionment of either the producer or handler membership is required in accordance with order requirements, such reapportionment shall be effected and announced prior to the nominations.

The order should provide that the members of the committee shall be selected by the Secretary from those nominated or from among other qualified persons. It is important that there be an administrative committee in existence at all times to administer the order. Consequently, the Secretary should not be limited only to nominees from which to select the committee membership. Moreover, he should be authorized to select committee members and alternate members without regard to nomination if, for some reason, nominations are not submitted in conformance with the procedure prescribed in the order, or the selection of someone other than a nominee so submitted is deemed warranted by the Secretary. Such selection should, of course, be from qualified persons as provided in the order, and on the basis of the representation provided in the order so that the composition of the committee will at all times continue as prescribed in the order.

Each person selected by the Secretary as committee member or alternate should qualify by promptly filing with the Secretary a written acceptance of a willingness and intention to serve in such capacity after being notified of selection. This requirement is necessary so that the Secretary will know whether or not the position has been filled.

The order should provide a method of filling any vacancies on the committee, including selection by the Secretary if nominations to fill any vacancies are not made as hereinafter provided. There may be vacancies caused by the death, removal, resignation, or disqualification of a member or alternate. It is important to maintain full membership on the committee, thus the order should require the committee to nominate a person to fill a vacancy on the committee within a reasonable time after such vacancy occurs. In the event the committee should fail to so nominate a person within 30 days after such vacancy occurs, the order should authorize the Secretary to fill such vacancy without regard to nominations.

The order should provide that an alternate member shall be selected for each member of the committee. Except as necessary to assure representation of all areas within the production area, each alternate selected should have the same qualifications for membership as the member. There could be occasions when a committee member is unable to attend a meeting or meetings. Provision for alternates would help assure a quorum at meetings, and thus permit the committee to conduct business when members are absent. Moreover, in the event of death, removal, resignation, or disqualification of a member, the alternate should act until a new member is nominated and selected. To further assure the presence of a quorum at meetings, the order should provide that, in the event a member and that member's alternate are both unable to attend a committee meeting, the chairman, with the concurrence of the majority of the members present may designate any other alternate present who is not acting as a member to serve in such member's place at that meeting. Any such alternate so designated should have the same marketing organization affiliation as the absent member. Only producer alternates should serve for absent producer members and only handler alternates should serve for absent handler members.

The committee should be given those specific powers which are set forth in Section 8c(7)(C) of the act. Such powers are necessary to enable an administrative agency of this character to function.

The committee's duties, as set forth in the recommended order, are necessary for the discharge of its responsibilities. These duties are generally similar to those specified for administrative agencies under other programs of this character. It should be recognized that these specified duties are not necessarily all-inclusive, and it may develop that there are other appropriate

duties the committee may need to perform.

The order should provide that at least 5 members of the committee or alternates acting for members, are necessary to constitute a quorum, and that any action by the committee shall require the concurring vote of 5 members. It is important that actions be concurred in by a majority of the committee, and such a requirement would assure this. The record indicates there may be occasions where action is needed but the matter does not warrant the expense of an assembled meeting or the inconvenience to committee members of the travel involved. Also, there may be times when the matter to be considered by the committee is so routine and others when rapid action is necessary because of an emergency that it would be unreasonable to call an assembled meeting. In such cases, it would be appropriate to authorize the committee to vote by telephone, telegraph, or by other means of communication. To enable this, the order should authorize such voting. However, in such instances an attempt should be made to contact every committee member, or the member's alternate if the member cannot be contacted. Any votes cast by telephone should be confirmed promptly in writing to provide a written record of the votes so cast. In case of an assembled meeting, however, all votes should be cast in person.

The order should provide, as hereinafter set forth, that members of the committee, and alternates when acting as members, shall be reimbursed for actual out-of-pocket expenses incurred in performing committee business. Reasonable expenses such as those related to travel and living costs should be reimbursed as it would be unfair for members or alternates to personally bear expenses incurred by them on behalf of the industry. Primarily, most expenses would be incurred in attending committee meetings. However, there may be instances when a member or alternate would be assigned specific duties by the committee, and incur expenses in performance of such duties. In any such case, the member or alternate should be reimbursed for any reasonable expenses involved in performing such duties.

In order for alternates to serve effectively at any committee meeting in place of an absent member, it may be desirable that they should have attended previous meetings along with the member, so as to have a good understanding of background discussion leading up to an action that may be taken at the meeting. Likewise, an alternate may, in future years, be selected as a member, and attendance at meetings by alternate members could be helpful as training exprience. Although only committee members, and alternates acting as members, have authority to vote on actions taken by the committee, it is desirable for the committee to obtain as wide a representation as practicable of producer and handler views and attitudes in considering a proposed regulation or other matter. Therfore, the order should provide that the committee, at its discretion, may request the attendance of alternate members at any or all meetings, notwithstanding the expected or actual presence of the respective member, when a situation appears to so warrant. The same reimbursement of expenses that is available to members should be made available to alternate members when they are so requested and attend such meetings.

The order should include a provision requiring the committee to prepare and furnish to the Secretary and to each handler and producer who so requests an annual report as soon as practicable after the end of each fiscal period. the report should review the administrative, financial, regulatory, and research and market development activities of the committee. It should also include information on shipments, prices, available marketing information, and such other information as may be deemed appropriate. Such report would provide committee members, the industry, and the Secretary with a record of the annual operations of the program and would provide a means for evaluation of the program and the need for any changes.

(c) The committee should be authorized to incur such expenses as the Secretary finds are reasonable and likely to be incurred by it during each fiscal period for its maintenance and functioning and for such other purposes as the Secretary may, pursuant to the provisions of the order, determine to be appropriate.

The funds to cover such expenses should be obtained through the levying of assessments on handlers. The act specificially authorizes the Secretary to approve the incurring of such expenses by any authority or agency established under an order, and requires that each marketing program of this nature contain provisions requiring handlers to pay their pro rata shares of expenses. The proposed California Grapefruit Administrative Committee would be the agency established to administer the order.

The committee should be required to prepare a budget at the beginning of each fiscal period showing estimates of the income and expenditures necessary for the administration of the order during such period. Each such budget should be submitted to the Secretary with an analysis of its components. Such budget and report should also recommend to the Secretary the rate or rates of assessment by variety designed to secure the income required to finance activities for that period. The committee, because of its knowledge of the prospective crop, should be in a good position to ascertain the necessary assessment rate or rates, and make appropriate recommendations.

The order should provide that the committee may recommend and the Secretary establish different assessment rates for different varieties of grapefruit. This was justified on the basis that circumstances may make it desirable to regulate one variety of grapefruit differently from another, and it may be necessary to develop research and market development projects that address peculiar problems related to varieties. When the levels of regulatory, research, or market development activity of one variety places heavier demands on the budget than others, it would be reasonable and appropriate to apply different assessment rates, and the order should contain authority to permit this.

The rate or rates of assessment should be established by the Secretary on the basis of the committee's recommendation, or other available information, so as to assure the imposition of such assessments as are consistent with the act. In order to assure the continuance of the committee, the order should provide that payment of assessments may be required even if particular provisions of the marketing agreement and order are suspended or become inoperative.

The order should require each handler to pay to the committee, upon demand, his or her pro rata share of such expenses related to each variety as the Secretary finds are reasonable and likely to be incurred by the committee during each fiscal period. Each handler's share of such expenses with respect to each variety should be equal to the ratio between the total quantity handled by such handler as the first handler thereof during the applicable fiscal period and the total quantity so handled by all handlers during the same fiscal period. In this way, payments by handlers of assessments would be proportionate to the respective quantities handled by

each handler and assessments would be levied on the same grapefruit only once.

Should it develop that assessment income for any variety or varieties during a fiscal period would not provide sufficient income to meet expenses, the funds to cover such expenses should be obtained from the reserve, if available, or by increasing the rate or rates of assessment. Since the benefits of the program are proportional to the volume handled, any increased assessment rate for a variety should be applied to the total volume of the variety handled during the particular fiscal period, so that the total payments by each handler during each fiscal period will be proportional to the total volume handled during that period.

In order to provide funds for the administration of the program prior to the time assessment income becomes available during a fiscal period, the committee should be authorized to accept advance payments of assessments from handlers and also, when such action is deemed to be desirable; to borrow money for such purpose. The provisions for the acceptance by the administrative agency of advance assessment payments is included in other orders and has been found to be a satisfactory and desirable method of providing funds to cover costs of operation early in a crop year prior to the time assessment income is received in an appreciable amount. During years of normal growing conditions, revenue available to the committee from assessments within the period would provide the funds to repay any loans.

It is unfair and inequitable to other handlers who pay assessments promptly, if a handler fails to pay assessments when due. A delinquent handler has an advantage in the use of assessment funds. Moreover, nonpayment of assessment can have an adverse effect on the operation of the order and may require the committee to borrow money and pay interest to continue operation. Consequently, the order should provide authority for the committee to impose a late payment charge on any handler who fails to pay his assessment within the time prescribed by the committee. In the event the handler thereafter fails to pay the amount outstanding including the late payment charge, within the prescribed time, the committee should be authorized to impose an additional charge in the form of interest on such outstanding amount. Authority for the committee to levy a late payment charge and to add interest to delinquent obligations should encourage handlers to pay assessment obligations promptly. By paying the obligations when due, handlers would not be subject to either the late payment charge or interest. It would not be desirable to specify the rate of interest in the order because interest rates change as the availability of money fluctuates. If the interest rate was specified in the order, it would be necessary to amend the order each time the interest rate should be changed. Amending the order involves considerable time and expense. Therefore, the order should permit the committee to establish the late payment charge, and fix the rate of interest, with the approval of the Secretary, so as to provide the flexibility needed to make such adjustments as are found to be necessary.

As hereinafter provided, the order should permit the establishment of a financial reserve. Funds in the reserve should be available for any approved expenses under the order, and to pay any costs of liquidation in the event of termination. Should crop failure or partial crop loss reduce the crop so that assessment income falls below expenses, in the absence of a reserve it would be necessary to increase the assessment rate to cover the deficit. This could be burdensome to the industry. A financial reserve available for any approved expenses could enable the committee to avoid such increases. It would be equitable for handlers to contribute to the establishment of an operating reserve during years of normal production rather than to be required to pay an excessively high rate of assessment during a year when the crop is materially reduced. The reserve fund should be built over a period of time, as funds in excess of expenses may be available. In order that reserve funds not be accumulated in excess of a reasonable amount, however, it should be provided that such funds shall not exceed approximately one fiscal period's expenses, exclusive of inspection costs. A reserve of that amount should be adequate to meet any foreseeable need. Any such income in excess of expenses collected when different assessment rates are in effect, should be maintained in the reserve in separate accounts by variety and identified by contributing handler. This provision is necessary to maintain equity among handlers with respect to the relative amounts of assessments paid by them.

Handlers should be entitled to a proportionate refund of any excess assessments that remain at the end of a fiscal period, except as necessary to establish and maintain an operating reserve. However, any such refund should be reduced by any outstanding obligation due the committee from such handler.

Upon termination of the order, any funds, including any funds in the reserve, that are not used to defray the necessary expenses of liquidation should, to the extent practicable, be returned to the handlers from whom such funds were collected. However, should the order be terminated after many years of operation, the precise equities of handlers may be difficult to ascertain, and any requirement that there be a precise accounting of the remaining funds could involve such costs as to nearly equal funds to be distributed. Therefore, the order should permit the unexpended reserve funds to be disposed of in any manner that the Secretary may determine to be appropriate in such circumstances.

Funds received by the committee under the order should be used solely for the purposes of the order. The Secretary should be authorized to require the committee, at any time, to account for all receipts and disbursements. Such authority would aid in assuring careful administration of assessment funds. Also, whenever any person ceases to be a member or alternate of the committee, he or she should be required to account for all funds, property, and other committee assets for which he or she is responsible and to deliver such funds, property and other assets to the committee. Such person should also be required to execute such assignments and other instruments as may be appropriate to vest in the committee the right to all such funds and property and all claims vested in such person. This is a matter of good business practice.

(d) The order should provide, as hereinafter set forth, authority for the establishment of production research, marketing research, and development projects designed to assist, improve, or promote the marketing, distribution, and consumption or efficient production of grapefruit including paid advertising. Record evidence indicates that there are a number of ways in which research and market development programs could contribute greatly to the efficiency in production and marketing, stimulate sales, and increase per capita consumption.

Authority to establish and maintain, over one or more seasons, programs involving production and marketing research projects would assist the industry in finding ways to improve the growing of grapefruit, and would permit needed studies that could lead to more

efficient handling of grapefruit from the time of picking through the time it is packaged and available for sale. Such research and development projects undertaken might include finding ways and means of developing information which would assist in the marketing of a larger quantity of grapefruit. Such projects could include an analysis of the chemical makeup of grapefruit. They might also include research as to treatment which would permit the grapefruit to be stored for longer periods, or to stay fresh longer in the grocers' bins. In addition, the projects might include packaging or other processes which would lower the cost of placing the grapefruit on the market, or projects to develop new outlets for grapefruit.

The foregoing are merely examples of the kinds of research that the committee may wish to undertake. They are not intended to be all inclusive. It is not possible to anticipate all the problems that may arise which may require research. Hence, it is desirable for the order to contain all the authority of the act so the committee may engage in any research projects relative to production and marketing designed to assist, improve, or promote the marketing, distribution, consumption, or efficient production of grapefruit. The committee should be empowered to engage in or contract for such projects, to spend funds for such purposes and to consult and cooperate with other agencies in the conduct of research projects.

The order should include authority for the committee to engage in promotional activities, including paid advertising, as a means of strengthening the competitive position of grapefruit in the marketplace. Such activities should include, but not be limited to radio, television, and magazine advertising; public relations activities; education programs with schools, and merchandising, including in-store point of purchase activities.

It was testified to at the hearing that it would be desirable to have authority to promote grapefruit on a regional, national, or even international basis, and that such promotion could be useful adjunct to grade, quality, size, and maturity requirements imposed under the order. At certain times of the year, California grapefruit is faced with stiff competition from grapefruit produced in Florida and Texas, which is promoted extensively. As the California grapefruit production is smaller than production in Florida and Texas, it is unlikely that California grapefruit would be promoted under this order as extensively as that in the other two states. With this in mind, the industry could focus most of its advertising and promotional activities on its fruit quality and in designated markets. In recent years, marketing and merchandising techniques have been developed under a California marketing program, and these techniques might be effectively used under this order. There has been a substantial differential in returns for one variety of grapefruit over the other principal variety during the past several seasons. Hence, it may be desirable to promote only one variety. For this reason, the order should contain authority so that advertising and promotion could be undertaken on a varietal basis, and that assessments could be assessed in an equitable manner on the variety being promoted.

The committee should, with the approval of the Secretary, be authorized to engage in cosponsoring advertising and promotion activities with other commodities or groups. For instance, the committee may find it advantageous to share in an equitable manner the costs for magazine advertisements, outdoor display posters, and other means of advertising.

The testimony also indicates that the order should provide that the committee be authorized to develop identifying marks, terms, and trade names to be used in conjunction with market development, promotion, and advertising programs. Also, the Secretary upon recommendation of the committee should be authorized to issue regulations limiting the use of any such marks, terms, or trade names to grapefruit meeting certain standards of grade, quality, size, or maturity. While a handler should be permitted to use such a mark, term, or trade name in conjunction with marketing his or her grapefuit if prescribed requirements are met, such usage should not be mandatory. A handler may decide not to use an authorized mark, term, or trade name, because a large percentage of his or her fruit may not meet the requisite requirements, or for some other reason. This provision should be adequately flexible to permit usage of identifying marks, terms, or trade names on all of the fresh grapefruit shipments, if the committee so recommends and the Secretary finds such usage to be appropriate.

A viable promotion program under the order could provide a means whereby consumers could be made aware of the seasonal availability of grapefruit grown in the production area and its different uses, as well as the characteristics of the different varieties. The use of paid advertising and other advertising techniques, as contemplated under the order would provide the committee with a means for stimulating sales and enhancing returns to producers. Hence, the use of promotional techniques designed to increase consumer knowledge and awareness of grapefruit and its use should be authorized to achieve a more favorable balance between supply and demand. It is not possible at this time to anticipate all the promotional activities that may be required to meet the needs of the industry. Therefore, the authority for the committee to establish promotional and advertising projects should be broad and flexible, and available to the extent permitted under the act to facilitate development of programs suitable to the time and circumstances. Under the program the committee should be charged with the responsibility for assessing the promotional needs and oportunities for marketing grapefruit in particular situations. The decisions on timing and allocation of advertising funds during the marketing season should be made by the committee in the light of existing circumstances at the time the decisions are made to permit optimum use of promotion funds.

Prior to engaging in any research or development projects, the committee should, of course, submit to the Secretary for approval the plans for each project. When considering any research or development project, the committee should give consideration to all those factors set forth in the order. It is only good business to consider the cost, the objectives to be accomplished, the time required to complete the project and other factors in order to arrive at a sound decision as to whether the project is justified. Of course, the costs of any such projects should be included in the budget submitted for approval, and such costs should be defrayed by the use of assessment funds as authorized by the act. Promotion activity should be oriented toward stimulating demand for grapefruit produced in the production area. No advertising, promotion, or publicity programs should be conducted with reference to any particular private brand or trade names, and promotion authorized under the order should not disparage the quality, value, sale or use of any other agricultural commodity.

(e) The declared policy of the act is to establish and maintain such orderly marketing conditions for grapefruit, among other commodities, as will tend to establish parity prices to producers and be in the public interest. The regulation of the handling of grapefruit grown in the production area, as proposed to be authorized in the order,

would provide a means for carrying out such policy.

To facilitate the operation of the program, each year the committee should submit a marketing policy report to the Secretary. The report should be for the ensuing season and should be sumitted by the committee prior to making any recommendations relative to regulations for such season. In developing its marketing policy, the committee should give consideration to factors which affect the production and marketing of grapefruit. Any such policy should be announce prior to the beginning of the harvesting period. The reason for such timely announcement is so producers and handlers will be apprised of the grade, quality, size, or maturity regulations that are likely to be in effect for the upcoming season and can plan accordingly.

The factors set forth in the recommended order which the committee should consider in developing its marketing policy are those that are appropriate and necessary for a proper evaluation of the overall supply and marketing outlook. These factors are: market prices by grade and size of each variety of grapefruit; supply of grapefruit by grade and size of each variety of grapfruit; supply of competing fruits; expected demand conditions for grapefruit in different market outlets, and in different geographical areas; type of regulation expected to be recommended during the fiscal period; trend and level of consumer income; marketing conditions affecting grapefruit prices; and other relevant factors having a bearing on the marketing of grapefruit.

The committee should also be permitted to revise its marketing policy, if appropriate, so as to give appropriate recognition to the latest known market conditions when changes in such conditions are sufficient to warrant modification of such policy. A report of each revised marketing policy should be sumitted to the Secretary and made available to produceres and handlers, together with the data considered by the committee in making the revision. Such action is necessary if the marketing policy is to be of maximum benefit to all persons concerned.

While the notice of hearing proposed that only the grade and size of fresh grapefruit be subject to regulation, it was testified at the hearing, without opposition, that the order should also contain authority for quality and maturity requirements. Therefore, appropriate modifications are made in the order, to provide authority for grade, quality, size, and maturity requirements.

The California Grapefruit Administrative Committee, as the local administrative agency under the proposed order, should be authorized to recommend regulations designed to effectuate the declared policy of the act, and as provided in the order. It is the key to successful operation of the order that the committee should have such responsibility. The Secretary should look to the committee, as the agency reflecting the thinking of the industry, for its views and recommendations for promoting more orderly marketing conditions and improving producers' returns for grapefruit. The committee should, therefore, have authority to recommend such regulations and engage in such activities as are authorized by the order whenever such regulations or activities will, in the judgment of the committee, tend to promote more orderly marketing conditions and effectuate the declared policy of the act.

The order should authorize the Secretary, on the basis of committee recommendations or other available information, to issue grade, quality, size, or maturity regulations, or any combination thereof, which tend to improve producers' returns and to establish more orderly marketing conditions for grapefruit. The Secretary should not be precluded from using such information as he may have, and which may or may not be available to the committee for consideration, in issuing such regulations, or amendments or modifications thereof, as may be necessary to effectuate the declared policy of the act. Also, when he determines that any regulation does not tend to effectuate such policy he should have authority to suspend or terminate the regulation, in accordance with the requirements of the act.

The regulation of the grade, quality, size, and maturity of grapefruit is a basic function of the proposed marketing order. The grade, quality, size, and maturity of grapefruit which are shipped in fresh market channels at any particular time have a direct effect on returns to producers. Grapefruit not meeting certain grades, qualities, sizes, and maturities fail to achieve consumer satisfaction and shipment of such fruit has a price depressing effect on other shipments of grapefruit. In addition, the shipment of low grade, small size, immature, and otherwise poor quality grapefruit destroys consumer confidence and depresses the financial returns to producers. Therefore, there should be authority under the order, to enable regulation of fresh shipments of grapefruit at an acceptable level of grade, quality, size, and maturity, which should improve producer returns by eliminating from fresh shipment grapefruit not meeting the minimum requirements.

As shipment of grapefruit which does not provide consumer satisfaction would be detrimental to the interests of producers and consumers, the order should also include authority to establish and maintain in effect minimum standards of quality and maturity in terms of grade, quality, size, and maturity, or any combination thereof, during any period when season average prices are expected to exceed the parity level. This would enable the establishment of regulations appropriate to the circumstances and preserve the favorable image of the fruit among consumers.

The objective under such order is to provide a supply of fresh grapefruit available for sale in fresh market channels of desirable grades, qualities, sizes, and maturities. Such requirements for shipments of grapefruit grown in the production area should contribute to the establishment of more orderly marketing conditions for such fruit and tend to increase the demand therefor.

The recommended order should provide for modification, suspension, or termination of any regulation whenever such action would tend to advance the objectives of the act and the order. The order should authorize such action, based upon a recommendation of the committee, or other information available to the Secretary. The need for this authority is obvious in that there likely will be times when due to changes in circumstances, a given regulation would not tend to effectuate the declared policy of the act and thus should be modified, suspended, or terminated, as applicable.

The order should provide for the establishment of seven marketing zones as hereinafter set forth. The record indicates that it is likely that marketing conditions in differing marketing areas differ. The establishment of marketing zones, and provisions for different grade, quality, size, and maturity requirements under the order, would allow the tailoring of regulations to the marketing conditions which exist in the different zones for grapefruit. Currently, the principal markets for grapefruit grown in the production area are in the nine western states listed in zones 1, 2, and 5. These nine western states have in the past been especially good markets for larger sized fruit. On the other hand, the export markets, including Alaska and Hawaii, have been good markets for smaller sized fruit. Alaska and Hawaii have traditionally been considered as

part of the export market by the California grapefruit industry, and should continue to be considered until such time it is found that the industry would be better served by some other zone configuration. Separate zones for Florida and Texas should be provided, as these states are important grapefruit producers, and their grapefruit are regulated by grade, quality, size, and maturity under Federal and State marketing programs. Therefore, this order should contain authority for the proposed regulatory requirements, hereinafter set forth, that would enable the grapefruit industry covered by this order to compete on an equal footing in the various different markets, not only in Florida and Texas, but also in other domestic and foreign markets as well.

The record indicates that dividing the marketplace into the following zones would be practical, and they would provide a reasonable basis for regulation and enforcement: Zone 1—California; Zone 2—Arizona; Zone 3—Florida; Zone 4—Texas; Zone 5—Washington, Oregon, Montana, Idaho, Wyoming, Nevada, and Utah; Zone 6—all of the states not included in zones 1, 2, 3, 4, 5, and 7; and Zone 7—Hawaii and Alaska and all export markets. Authority for any combination of grade, quality, size, and maturity regulations for grapefruit shipped to any of these zones would provide necessary flexibility in the order, and enable the shipment of grapefruit to the various markets in these zones in a manner consistent with supply and demand factors. While these zones were designed in such manner that geographic factors and transportation routes would minimize compliance problems, it is recognized that there could be special compliance problems if different regulations are prescribed for different zones. Therefore, the order should provide that when different regulations are prescribed for different zones under the order, grapefruit may only be shipped by the initial handler directly to the zone permitted.

Furthermore, the committee should be authorized to require the filing of necessary reports, and to establish safeguards to assure compliance, including requirements that handlers certify that grapefruit will be distributed only in the zone permitted, and that packages be marked to show the zone where the grapefruit is to be shipped.

(f) The order should provide for the exemption from its provisions of such handling of grapefruit which it is not necessary to regulate in order to effectuate the declared policy of the act. Insofar as practicable, such exempted handling should be stated explicitly in the order so that handlers will have knowledge of such handling as is not subject to the provisions of the program. However, it is recognized that it is not possible to foresee all possible needs for exemption, hence, provisions should be made to authorize the committee, with the approval of the Secretary, to exempt some handling of grapefruit from any or all order requirements such as specified small quantities, or types of shipments, including gift fruit shipments, sales at roadside stands, and shipments to health food stores; as well as other shipments made for specified purposes which are not necessary to regulate in order to effectuate the declared policy of the act. Authorization is also necessary to enable the exemption of handling as may be determined necessary to facilitate the conduct of research and handling which is found not administratively feasible to regulate because of the small volume and the cost involved, and which would not materially affect marketing conditions in commercial channels.

The evidence of record indicates that the order should exempt from the assessment, regulatory, and inspection and certification provisions in the order the handling of grapefruit to a charitable institution for consumption at such institution; to a relief agency for disposition by such agency; for conversion by a commercial processor into any processed or manufactured product, including canned or bottled grapefruit or grapefruit juice, frozen products or beverage base; and by express, parcel post, or common or contract carrier in units of five cartons or less. Grapefruit shipped to such outlets in the manner prescribed are examples of handling which have little or no effect on commercial fresh market sales. Thus, it is not necessary to regulate such shipments, if appropriate safeguards are complied with.

The committee should retain flexibility to prescribe exemption provisions so as to be responsive to conditions affecting the handling of grapefruit in the production area. Therefore, it should be discretionary with the committee, subject to the approval of the Secretary, whether grapefruit handled in small quantities, types of shipments, or shipments made for special purposes, should be exempted from regulation, assessment, inspection, certification, and reporting requirements.

If it is found that such exemptions are subject to abuse or weaken the effectiveness of the program, the committee should be authorized to prescribe, with the approval of the Secretary, such rules, regulations, and safeguards as are necessary to prevent grapefruit handled for any of the exempted purposes from disrupting the marketing of grapefruit in regulated channels of trade. For example, should it be found that a portion of the grapefruit moving to commercial processors is being diverted to fresh fruit markets, it may be necessary for the committee to establish procedures to govern the movement of fruit for processing, even though such grapefruit does not have to comply with grade, quality, and maturity or other requirements. These procedures might include such requirements as filing application for authorization to move grapefruit in exempted channels and certification by the receiver that such grapefruit would be used only for the purpose indicated, if it is found that such requirements are necessary to achieve effective program operations.

The order should permit the committee to issue "special handling permits" which would authorize the transportation of grapefruit in bulk lots not meeting the applicable grade and size regulations to packing facilities outside the production area for preparation for fresh market. All such grapefruit would need to be handled in accordance with rules and regulations recommended by the committee and approved by the Secretary, and any shipment from such facility would be subject to the assessments, regulations, and inspection and certification requirements.

Testimony at the hearing indicated that grapefruit produced in the production area often is transported to the Riverside area, located about 60 miles outside of the production area, for packing. This apparently is advantageous to the producers and the order should allow for it. Since it may develop that producers will find it advantageous to have fruit prepared for market at other points located outside the production area the order should allow for such, provided that the producer and the packer follow specified procedures designed to assure that the fruit when placed in the channel of commerce will be in compliance with regulatory and other order requirements. It is important that control be exercised on grapefruit packers located outside the production area, to assure that in the handling of such grapefruit, they comply with grade, quality, size, and matrurity requirements in effect for grapefruit produced in the production area.

Under this provision the producer would be required to apply and obtain a "special handling permit" from the

committee. Such permit would specify the procedures to be followed in the transport of the fruit to a specified packinghouse for preparation for market. Likewise, the out of the production area packer would need to obtain a "special handling permit" from the committee to receive the grapefruit involved. The procedure may require that packers located outside the production area file an application with the committee and agree to abide by all order requirements in order to be allowed to participate. If after approval the committee finds that a packer is not complying with required sizing, grading, inspection, reporting or other requirements of the marketing order, then the committee should have the authority to disapprove, or revoke upon notice, such packer's permit to handle grapefruit, as appropriate. Any producer who delivers grapefruit to a packer outside the production area who does not have a "special handling permit", or whose permit has been revoked, should be considered the handler of the grapefruit. In performing handling functions, a producer becomes a handler and is subject to those requirements incumbent upon handlers under the order. Special reporting requirements on the part of both producers and packers of such grapefruit may be necessary and appropriate to ensure compliance with order provisions and regulations issued thereunder, and the order should so provide.

(g) Inspection and certification of shipments are necessary to assure that the handling of grapefruit complies with regulations effective under the proposed order. The Federal-State Inspection Service has inspectors in the production area, and this agency has in prior years provided necessary inspection and certification for California grown grapefruit under M.O. 909.

Responsiblility for obtaining inspections should fall upon the handlers. The provision that each handler shall cause each lot of grapefruit to be covered by a Federal or Federal-State Inspection Certificate and be inspected by an authorized representative of the Federal or Federal-State Inspection Service is a reasonable and uniform requirement, as a method for determining that each shipment of grapefruit meets the regulatory requirements in effect under marketing order provisions. There is no other practical, feasible manner of determining if grapefruit shipments meet regulatory requirements, except through inspection and certification.

Each handler of grapefruit should see that each shipment is either inspected at his request, or has been inspected prior to receipt, and the order should so provide. For example, each first handler should, prior to handling grapefruit, request the Inspection Service to inspect and certify it as meeting order requirements. If this requirement is met by the first handler, further inspection and certification will not be necessary. However, in the event a handler who is not the first handler receives a shipment of grapefruit which has not previously been inspected, such handler should be responsible for having it inspected even though it was previously handled by another handler. Compliance can be effective only if each handler is responsible for seeing that the requirements for inspection and certification is met. Hence, the obligation should be incumbent on each successive handler.

Each handler should be required to submit or cause to be submitted to the committee, promptly after each inspection, a copy of each certificate of inspection. Inspection certificates can provide a basis for collecting assessments, assure the committee of compliance with the grade, quality, size and maturity requirements, and can be the source of useful statistical data. This requirement can be met by handlers requesting the Inspection Service to furnish the committee a copy of the certification for each shipment he or she handles. The certificates should be submitted promptly so that statistical data can be compiled on a current basis and timely investigation made of any suspected violations.

The order should authorize the committee to enter into an agreement with the Federal and Federal-State Inspection Service for the required inspection and collect from handlers their respective pro rata share of inspection costs, if it determines such an arrangement would be appropriate. The benefits of the order, including inspection, will accrue to the industry generally. Under a committee contract it is contemplated that the inspection fee would be set as a uniform fee per carton regardless of where or how many cartons are inspected at a particular time. However, should the committee determine that arranging inspection through the marketing order is not the most effective or efficient manner of having the grapefruit inspected, handlers would be required to make their own arrangements with the Inspection Service for the inspection and certification and individually make payment for these services.

(h) The committee should have authority, with the approval of the Secretary, to require that handlers submit to the committee such reports and information within a specified period of time, as it may need to perform its functions and fulfill its responsibilities under the order. Handlers have the necessary information in their possession and the requirement that they furnish it to the committee in the form of reports should not constitute an undue burden.

Reports are needed by the committee for such purposes as determining whether handlers are complying with order requirements, to aid in determining and collecting program assessments, and to enable compilations of statistical data for use in marketing policy development and recommendations for regulations.

It is anticipated that information needed may include: the name and address of the handler; the shipping point; identification of the carrier; date and time of shipment; number and type of containers in a shipment; the destination of shipment; the inspection certificate applicable to the shipment; the grade, quality, size, and maturity of the grapefruit in the individual shipments; and summaries of grapefruit shipments to different specified destinations and outlets by the individual handlers. The foregoing, however, should not be construed as a complete list of information the committee might require. It is not possible at this time to anticipate every type of report or kind of information which the committee may find necessary for the proper conduct of operations under the order. Therefore, the order should authorize the committee, with the approval of the Secretary, to require each handler to furnish such information as it finds necessary for it to perform its duties under the order.

Since it is possible that a question could arise with respect to compliance, each handler should be required to maintain for each fiscal period complete records on the grapefruit handled or otherwise disposed of by them, as may be necessary to verify the reports such handlers submit to the committee. Such records should be retained for not less than two years after the end of the fiscal period in which the transaction occurred, so that, if needed in connection with enforcement, the requisite records will be available for purpose.

The record indicates that the inspection certificate and shipping manifest applicable to each shipment of grapefruit would likely contain most of the information the committee would

need, in the ordinary course of operations. Thus, the submission of reports directly by handlers should be kept to a minimum. As hereinafter specified in the order, all reports and records submitted by handlers for committee use should be kept confidential in the custody of a committee employee and the contents disclosed to no person other than the Secretary and persons authorized by the Secretary. Under certain circumstances, release of information compiled from reports may be helpful to the committee and to the industry generally in planning operations under the order. However, any information released should be on a composite basis, and such release of information should disclose neither the identity of the person furnishing the information nor such person's individual operations. This is necessary to prevent disclosure of information that may affect the trade or financial position or business operations of individual handlers.

(i) Except as provided in the recommended order, no handler should be permitted to handle grapefruit, the handling of which is prohibited by such order or prohibited by any regulations issued under such order. If the program is to operate effectively, compliance with its requirements is essential and no handler should to permitted to evade any of its provisions. Any such evasion on the part of even one handler could be demoralizing to those handlers who are in compliance and could impair the effective operation of the program.

(j) The provision of §§ ——.50 throughs——.58 as contained in the notice of hearing published in the Federal Register on February 7, 1979 (44 FR 7729) and hereinafter set forth in the recommended order, are common to marketing agreements and orders now operating. All such provisions are incidental to and not inconsistent with the act and are necessary to effectuate the other provisions of the recommended marketing order and marketing agreement and to effectuate the declared policy of the act. The evidence of record supports inclusion of each such provision. Those provisions which are applicable to both the marketing agreement and the marketing order, identified by section numbers and heading are as follows: § ——.51 Right of the Secretary; § ——.52 Termination; § ——.53 Proceedings after termination; § ——.54 Effect of termination or amendments; § ——.55 Duration of immunities; § ——.56 Derogation; § ——.57 Personal liability; and § ——.58 Separability.

With respect to § ——.52 Termination, record evidence shows that it is the wish of the industry, and the order so provides, that the Secretary conduct a referendum among producers to ascertain if continuance of the order is desired by producers. Such referendum should be conducted no later than May 15, 1985, and subsequently every 5th year following such date. However, if an intervening continuance or amendment referendum is conducted and the vote relative to such referendum is affirmative, the next continuance referendum should be conducted five years after the date of such latest referendum. This would provide producers with an opportunity to periodically appraise the operation of the marketing order program and determine whether the program should be continued. In addition, the order should contain a provision whereby the committee could request that the Secretary conduct a referendum during any fiscal period. Any such request should be made no later than March 15 of the then current fiscal period, to provide sufficient time to allow any action taken to be completed by August 31, the end of the fiscal period. In any event the Secretary may conduct a referendum at such other times as he may determine to be appropriate. Such authority is contained in § ——.52(c) of the order.

Provisions which are applicable to the proposed marketing agreement only, identified by section number and heading, are as follows: § ——.59 Counterparts; § ——.60 Additional parties; and § ——.61 Order with marketing agreement.

Rulings on briefs of interested parties. At the conclusion of the hearing the Administrative Law Judge fixed March 26, 1979, as the final date for interested persons to file proposed findings and conclusions and written arguments or briefs based upon the evidence received at the hearing. No briefs were filed.

General Findings. Upon the basis of the evidence introduced at such hearing, and the record thereof, it is found that:

(1) The marketing agreement and order, and all of the terms and conditions thereof, will tend to effectuate the declared policy of the act;

(2) The said marketing agreement and order regulate the handling of grapefruit grown in the production area in the same manner as, and are applicable only to persons in the respective classes of commercial or industrial activity specified in, a proposed marketing agreement and order upon which a hearing has been held;

(3) The said marketing agreement and order are limited in their applicability to the smallest regional production area which is practicable, consistent with carrying out the declared policy of the act, and the issuance of several orders applicable to subdivisions of the production area would not effectively carry out the declared policy of the act;

(4) There are no differences in the production and marketing of grapefruit grown in the production area which make necessary different terms and provisions applicable to different parts of such area; and

(5) All handling of grapefruit grown in the production area, as defined in said marketing agreement and order, is in the current of interstate or foreign commerce or directly burdens, obstructs, or affects such commerce.

Recommended marketing agreement and order. The following marketing agreement and order[1] are recommended as the detailed means by which the foregoing conclusions may be carried out.

§ ——.1 Secretary.

"Secretary" means the Secretary of Agriculture of the United States, or any officer or employee of the Department to whom authority has heretofore been delegated, or to whom authority may hereafter be delegated.

§ ——.2 Act.

"Act" means Public Act No. 10, 73d Congress (May 12, 1933), as amended and as reenacted and amended by the Agricultural Marketing Agreement Act of 1973, as amended (48 Stat. 31; as amended; 7 U.S.C. 601–674).

§ ——.3 Person.

"Person" means any individual, partnership, corporation, association, or any other business unit.

§ ——.4 Grapefruit.

"Grapefruit" means all varieties of Citrus paradisi, MacFayden, grown in the production area.

§ ——.5 Production area.

"Production area" means the following counties or their segments in the State of California described as follows: Imperial County; that part of San Bernardino County situated east of a line due north and south through Rice; that part of Riverside County situated east of a line due north and south through the Post Office in Whitewater; and that part of San Diego County

[1] The provisions identified with asterisks (* * *) apply only to the proposed marketing agreement and not to the proposed marketing order.

situated east of a line due north and south through the Post Office in Julian.

§ ——.7 Producer.

"Producer" is synonymous with grower and means an person engaged in a proprietary capacity in the production of grapefruit.

§ ——.8 Handler.

"Handler" means any person (except a common or contract carrier of grapefruit owned by another person) who handles grapefruit in fresh form.

§ ——.9 Handle.

"Handle" means to sell, ship, consign, deliver, or transport grapefruit or cause grapefruit to be sold, shipped, consigned, delivered, or transported between the production area and any point outside thereof, or within the production area: *Provided,* That the term handle shall not include (a) the transporting or shipping of grapefruit by common carrier when such grapefruit is owned by another person; (b) the sale of grapefruit on tree; (c) the transporting of grapefruit from the point of production to a packinghouse within the production area for preparation for fresh market; or (d) the transporting of grapefruit from the point of production to a packinghouse outside the production area for preparation for fresh market under a special handling permit issued pursuant to § ——.45.

§ ——.10 Fiscal period.

"Fiscal period" is synonymous with fiscal year and means the 12-month period beginning on September 1 of one year and ending on the last day of August of the following year or such other period as the committee, with the approval of the Secretary, may prescribe.

§ ——.11 Variety.

"Variety" or "varieties" means any one or more of the following classifications or groupings of grapefruit: (a) White or golden seeded and white or golden seedless grapefruit; and (b) pink or red seeded grapefruit and pink or red seedless grapefruit.

§ ——.12 Committee.

"Committee" means the California Grapefruit Administrative Committee established under § ——.20.

Administrative Body

§ ——.20 Establishment and membership.

(a) There is hereby established a California Grapefruit Administrative Committee consisting of nine members, each of whom shall have an alternate who shall have the same qualifications as the member for whom he or she is an alternate. Four of the members and their alternates shall be producers or officers or employees of producers, henceforth referred to as "producer members" of the committee. To the extent practicable producer members shall not be handlers or directors or employees exercising a supervisory or managerial function of a handler, but members of a cooperative marketing organization shall not be considered as handlers because of such membership. Four of the members and their alternates shall be handlers or directors, officers, or employees of a handler, henceforth referred to as "handler members" of the committee. One member and alternate shall represent the public, henceforth referred to as "public member." The public members and his or her alternate shall be nominated by the committee and selected by the Secretary.

(b) Allocation of the producer member positions shall, to the extent practicable, be at least one member to represent producers affiliated with cooperative marketing organizations, henceforth referred to as "cooperative producers", and at least one member to represent growers who are not so affiliated, henceforth referred to as "independent producers." A second producer member shall be allocated to any group (cooperative or independent) which during the fiscal period preceding the fiscal period in which nominations are made produced more than 37.5 percent but not more than 62.5 percent of the total production of grapefruit; and any group whose production is more than 62.5 percent shall be allocated a third member. At least one producer alternate member shall be a producer from outside that portion of Riverside County which is east of a line due north and south through the post office at Whitewater and west of a line due north and south through Chiriaco Summit, and any such alternate member need not be of the same affiliation as the member.

(c) Allocation of handler member positions shall be at least one member to represent cooperative marketing organizations, henceforth referred to as "cooperative handlers", and at least one member to represent handlers who are not cooperative marketing organizations, henceforth referred to as "independent handlers." A second handler member shall be allocated to any group (cooperative or independent) which during the fiscal period preceding the fiscal period in which nominations are made handled more than 37.5 percent but not more than 62.5 percent of the total quantity of grapefruit handled by all handlers; and any group which handled more than 62.5 percent shall be allocated a third member.

(d) The committee may, with the approval of the Secretary, change the number of producer or handler positions on the committee, reapportion the membership between cooperatives and independents, and limit the number of positions that may be filled by persons affiliated with the same packinghouse or handling organization, as may be necessary to assure equitable representation.

§ ——.21 Term of office.

The term of office of the members and alternate members shall be two fiscal periods: *Provided,* That the term of office of initial members and alternates shall begin as soon as practicable subsequent to the effective date of this part and end August 31, 1981. Each member and alternate shall serve during the term of office for which that person is selected and has qualified and shall continue to serve until a successor is selected and has qualified.

§ ——.22 Nomination.

(a) *Initial producer and handler members.* Nomination for the initial members and alternate members of the committee for each position may be submitted to the Secretary by individual producers and handlers. Such nominations may be made by means of meetings of handlers and meetings of producers of the applicable groups (cooperative or independent). Any such nominations shall be filed with the Secretary not later than the effective date of this part. If such nominations are not filed as specified in this section, the Secretary may select initial members and alternate members, without regard to nomination, on the basis of the representation provided in § ——.20.

(b) *Successor producer members.* (1) The Secretary shall cause to be held, not later than July 1 of each odd-numbered year, meetings of producers for the purpose of making nominations for members and alternate members of the committee.

(2) Only producers, including duly authorized officers or employees of producers, who are present shall participate in the nomination of producer members and alternates. Each producer shall be entitled to cast only one vote for each nominee to be selected. To the extent practicable, only producers affiliated with cooperative marketing organizations may elect nominees affiliated with such organizations; and only producers not affiliated with cooperative marketing organizations may elect nominees not so

affiliated. In the event some of a producer's grapefruit is handled through a cooperative marketing organization and some is handled through an organization that is not a cooperative marketing organization, such producer shall be eligible to participate only in the category (i.e., cooperative or independent) in which such producer's major volume of fruit is handled.

(c) *Successor handler members* (1) The Secretary shall cause to be held, not later than July 1 of each odd-numbered year, meetings of handlers for the purpose of making nominations for members and alternate members of the committee.

(2) Only handlers, including duly authorized officers or employees of handlers, who are present and who are eligible to serve as handler members of the committee shall participate in the nomination of handler members and alternate handler members of the committee. Each handler shall be entitled to cast only one vote for each nominee to be selected.

(3) To the extent practicable, only handlers affiliated with cooperative marketing organizations may vote for nominees affiliated with such organizations, and only handlers not affiliated with cooperative marketing organizations may vote for nominees not so affiliated.

(3) *Reapportionment.* Any required reapportionment of committee membership shall be announced at nomination meetings prior to the making of any nomination.

(e) *Public member.* Nominations for the public member and alternate member shall be made by the committee, from qualified persons residing in the production area.

(f) *Failure to nominate.* In the event nominations are not made as specified in § ——.22, the Secretary may select members and alternate members, without regard to nominations, from any eligible persons.

§ ——.23 Selection.

The Secretary shall select members and alternates of the committee from person nominated pursuant to § ——.22, § ——.26, or from other qualified persons.

§ ——.24 Acceptance.

Any person selected by the Secretary as a member or as an alternate member of the committee shall qualify by filing a written acceptance with the Secretary promptly after being notified of such selection.

§ ——.25 Alternate members.

An alternate member shall act in the place of the member during such member's absence. In the event of the death, removal, resignation, or disqualification of a member, the alternate shall act for that member until a successor for such member is selected and has qualified. In the event that neither the member nor that member's alternate are able to attend a committee meeting, the chairman, with the concurrence of the majority of the members present may designate any other alternate present who is not acting as a member to serve in such member's place at the meeting. To the extent practicable, any such alternate so designated shall have the same affiliation as the absent member and only producer alternates may serve for absent producer members and only handler alternates may serve for absent handler members.

§ ——.26 Vacancies.

To fill any vacancy occasioned by the failure of any person selected as a member, or as an alternate member of the committee to qualify, or in the event of the removal, resignation, disqualification or death of any member or alternate member, a successor for such person's unexpired term shall be nominated by a majority of the remaining committee members to provided, to the extent practicable, equitable representation as provided in § ——.20, and selected as provided in § ——.23. If nomination to fill any such vacancy is not made within 30 calendar days after such vacancy occurs, the Secretary may fill such vacancy without regard to nominations.

§ ——.27 Powers.

The Committee shall have the following powers;

(a) To administer this part in accordance with its terms and provisions;

(b) To make and adopt rules and regulations to effectuate the terms and provisions of this part;

(c) To receive, investigate, and report to the Secretary complaints of violations of the provisions of this part; and

(d) To recommend to the Secretary amendments to this part.

§ ——.28 Duties.

It shall be the duty of the committee:

(a) To select a chairman from its membership, and to select such other officers and adopt such rules and regulations for the conduct of its business as it may deem advisable;

(b) To keep minutes, books, and records which will clearly reflect all of its acts and transactions, which minutes, books, and records shall at all times by subject to the examination of the Secretary; and to mail a copy of the minutes to the Secretary promptly following each committee meeting and to any other interested person who has filed his name and address with the committee for such purpose;

(c) To act as intermediary between the Secretary and the producers and handlers;

(d) To furnish the Secretary with such available information as the Secretary may request;

(e) To appoint such employees as it may deem necessary and to determine the salaries and define the duties of such employees;

(f) To cause its books to be audited by a competent public accountant at least once for each fiscal period, and at such other time as it deems necessary or as the Secretary may request, and to file with the Secretary copies of all audit reports;

(g) To prepare a monthly statement of financial operations of the committee and to make such reports, together with the minutes of the meetings of the committee, available for inspection by any producer or handler at the office of the committee;

(h) To determine as near as practicable the total crop of grapefruit, and to make such determinations, including determinations by grade and size as if may deem necessary or as may be prescribed by the Secretary, in connection with the administration of this part;

(i) To investigate the growing, handling, and marketing conditions with respect to grapefruit and to assemble data in connection therewith;

(j) To prepare and mail, as soon as practicable after the close of each fiscal period, to the Secretary, and to each handler and grower who make requests therefor, an annual report covering the operation of the previous fiscal period;

(k) With the approval of the Secretary, to increase or decrease the membership of the committee;

(l) To consult, cooperate, and exchange information with other marketing order committees and other individuals or agencies in connection with all proper committee activities and objectives under this part; and

(m) To establish, with the approval of the Secretary, procedures for the nomination of and qualification for a public member and alternate.

§ ——.29 Compensation and expenses.

The members of the committee and alternates when acting as members, shall serve without compensation, but they shall be reimbursed for reasonable expenses, as approved by the committee, incurred by them in the performance of their duties under this part. Alternate members shall be reimbursed for expenses necessarily incurred by them in attending committee meetings at the request of the committee, notwithstanding that the committee member for whom they serve as alternate also attends such meeting, and for performing other committee business at the request of the committee.

§ ——.30 Procedure.

(a) Five members of the committee shall constitute a quorum, and any action of the committee shall require at least 5 votes: *Provided,* That if the number of committee members is changed pursuant to § .28, the committee may with the approval of the Secretary change the number of members required to constitute a quorum, or the number of affirmative votes required to take any action on behalf of the committee, or both.

(b) The committee shall give to the Secretary and to any other interested persons who have filed their names and addresses with the committee requesting such notice the same notice of meetings of the committee as is given to the members of the committee.

(c) At any assembled meeting each vote must be cast in person. At any meeting other than an assembled meeting, the committee may vote by telephone, telegraph, or other means, and any such vote cast by the telephone shall be confirmed promptly in writing.

Expenses and Assessments

§ ——.34 Expenses.

The committee is authorized to incur such expenses, including inspection expenses, as the Secretary finds are reasonable and likely to be incurred to carry out the function of the committee during each fiscal period. The funds to cover such expenses shall be acquired by the levying of assessments upon handlers, as provided in § ——.35.

§ ——.35 Assessments.

(a) Each handler who first handles grapefruit shall, with respect to the grapefruit so handled, pay to the committee, upon demand, such handler's pro rata share of expenses which the Secretary finds are reasonable and likely to be incurred by the committee for its maintenance and functioning during each fiscal period.

(b) The Secretary shall fix the rate(s) of assessment to be paid by handlers and such rate(s) may be fixed by variety. At any time during or after a fiscal period, the Secretary may increase the rate(s) of assessment in order to secure sufficient funds to cover any later finding by the Secretary relative to the expenses of the committee. Such increased rate with respect to any particular variety shall be applicable to all grapefruit of that variety handled during that fiscal period. To provide funds for the administration of this part, the committee may accept the payment of assessments in advance, or may borrow money for such purpose.

(c) The payment of assessments for the maintenance and functioning of the committee may be required under this part throughout the period it is in effect, irrespective of whether particular provisions thereof are suspended or become inoperative.

(d) Any assessment not paid by a handler within a period of time prescribed by the committee may be subject to an interest or late payment charge, or both. The period of time, rate of interest, and late payment charge shall be as recommended by the committee and approved by the Secretary.

§ ——.36 Accounting.

(a) If, at the end of a fiscal period, the assessments collected are in excess of expenses incurred, such excess shall be accounted for in accordance with one of the following:

(1) If such excess is not retained in a reserve, as provided in paragraph (a)(2) of this section, it shall be refunded proportionately to the handlers from whom it was collected. *Provided,* That any sum paid by a handler in excess of his pro rata share of the expenses during any fiscal period may be applied by the committee at the end of such fiscal period to any outstanding obligations due the committee from such handler.

(2) The committee, with the approval of the Secretary, may carry over such excess into subsequent fiscal periods as a reserve: *Provided,* That such reserve shall not exceed an amount approximating one full fiscal period's expenses, exclusive of inspection costs. Any such reserve may be maintained by variety. Such reserve funds may be used (i) to defray expenses, during any fiscal period, prior to the time assessment income is sufficient to cover such expenses, (ii) to cover deficits incurred during any fiscal period when assessment income is less than expenses, (iii) to defray expenses incurred during any period when any or all provisions of this part are suspended or are inoperative, or (iv) to cover necessary expenses of liquidation in the event of termination of this part. Upon such termination, any funds not required to defray the necessary expenses of liquidation shall be disposed of in such manner as the Secretary may determine to be appropriate: *Provided,* That to the extent practical, such funds shall be returned pro rata to the handlers from whom such funds were collected.

(b) All funds received by the committee shall be used solely for purposes specified in this part and shall be accounted for in the manner provided in this part. The Secretary may at any time require the committee and its members to account for all receipts and disbursements.

(c) Upon the removal of expiration of the term of office of any member of the committee, such member shall account for all receipts and disbursements and deliver all property and funds in his possesssion to the committee, and shall execute such assignments and other instruments as may be necessary or appropriate to vest in the committee full title to all of the property, funds, and claims vested in such member pursuant to this part.

Research and Market Development

§ ——.37 Production research, marketing research, and market development.

The committee, with the approval of the Secretary, may establish or provide for the establishment of production research, marketing research and development projects designed to assist, improve or promote the marketing, distribution, consumption or efficient production of any variety or varieties of grapefruit. The expense of such activities shall be paid from funds collected under § ——.35. Such projects may provide for any form of marketing promotion, including paid advertising. Any such project for promotion and advertising may utilize an identifying mark or term which shall be made available for use by all handlers in accordance with such terms and conditions as the committee, with the approval of the Secretary, may prescribe.

Regulation

§ ——.38 Marketing policy.

Prior to submittingh recommendations under § ——.39, the committee shall submit to the Secretary a report setting forth the marketing policy it deems advisable for the ensuing fiscal period. Additional reports shall be submitted from to time if it is deemed advisable by

the committee to adopt a new or modified marketing policy because of changes in the demand and supply situation for grapefruit. The committee shall publicly announce the submission of each marketing policy report and copies thereof shall be available at the committee's office for inspection by any producer or handler. In determining each such marketing policy the committee shall give due consideration to the following:

(a) Market price by grade and size of each variety of grapefruit;

(b) Supply of grapefruit by grade and size of each variety of grapefruit;

(c) Supply of competing fruits;

(d) Expected demand conditions for grapefruit in different market outlets;

(e) Type of regulation expected to be recommended during the fiscal period;

(f) Trend and level of consumer income;

(g) Marketing conditions affecting grapefruit prices; and

(h) Other relevant factors.

§ ——.39 Recommendations for regulation.

Whenever the committee finds it advisable to regulate the handling of any particular grade, quality, size, or maturity, or any combination thereof, of any variety of grapefruit during any period, it shall recommend such regulation for that period. Recommendations may include different grade, quality, size, or maturity requirements, or any combination thereof, for any variety handled to any of the marketing zones established pursuant to § .43.

§ ——.41 Issuance of regulations.

(a) Whenever the Secretary finds from the recommendations and information submitted by the committee or from other available information, that limiting the handling of any variety of grapefruit to any particular grade, quality, size, or maturity, or any combination thereof, would tend to effectuate the declared policy of the act, the Secretary shall so limit the handling of the variety for a specified period; and the limitation may prescribe different grade, quality, size, or maturity requirements, or any combination thereof, for the handling of any such variety by the initial handler thereof directly to the marketing zones specified. The committee shall be informed immediately of any such regulation issued by the Secretary; and the committee shall promptly give adequate notice thereof to handlers.

(b) Whenever the Secretary finds from the recommendation and information submitted by the Committee, or from other available information, that to establish and maintain in effect minimum standards of quality or maturity, or both, for the handling of grapefruit during any period would tend to effectuate the declared policy of the act and be in the public interest, the secretary shall establish in terms of grades, sizes, or both, such standard, designate such period, and so limit the handling of such grapefruit. The Secretary shall immediately notify the committee of the issuance of any such regulation; and the committee shall promptly give adequate notice thereof to handlers.

§ ——.42 Modification, suspension, or termination of regulations.

(a) In the event the committee at any time finds that, by reason of changed conditions, any regulations issued under § ——.41 should be modified, suspended, or terminated, it shall so recommend to the Secretary.

(b) Whenever the Secretary finds from the recommendation and information submited by the committee or from other available information, that a regulation should be modified, suspended, or terminated with respect to any or all shipments of grapefruit in order to effectuate the declared policy of the act, the Secretary shall modify, suspend, or terminate such regulation. If the Secretary finds that a regulation obstructs or does not tend to effectuate the declared policy of the act, the Secretary shall suspend or terminate such regulation. On the same basis and in like manner the Secretary may terminate any such modification or suspension.

§ ——.43 Marketing zones.

(a) The committee, with the approval of the secretary, may prescribe different grade, quality, size, or maturity requirements, or any combination thereof, for any variety of grapefruit handled for shipment to the following marketing zones:

(1) Zone 1: The State of California.

(2) Zone 2: The State of Arizona.

(3) Zone 3: The State of Florida.

(4) Zone 4: The State of Texas.

(5) Zone 5: The States of Washington, Oregon, Montana, Idaho, Wyoming, Nevada, and Utah.

(6) Zone 6: The States not included in Zones 1, 2, 3, 4, 5, and 7.

(7) Zone 7: All export markets including the States of Alaska and Hawaii.

(b) The committee, with approval of the Secretary, may redefine and establish any other combination of marketing zones.

§ ——.44 Grapefruit not subject to regulation.

(a) Except as otherwise provided in this section, any person may, without regard to the provisions of §§ ——.35, ——.41, and ——.42, and the regulations issued thereunder, ship grapefruit or any variety as follows: (1) to a charitable institution for consumption at such institution; (2) to a relief agency for disposition by such agency; (3) for conversion by a commercial processor into any processed or manufactured product, including canned or bottled grapefruit juice, frozen products or beverage base; or (4) by express, parcel post or common or contract carrier in units of five cartons or less.

(b) Upon the basis of recommendation and information submitted by the committee, or from other available information, the Secretary may relieve in whole or in part from any or all of the requirements under this part, the handling or grapefruit in such minimum quantities, in such types of shipments, in such types of outlets, or for such specific purposes as the committee may recommend.

(c) The committee shall, with the approval of the Secretary, prescribe rules, regulations, and safeguards necessary to assure compliance with this section. Such rules, regulations, and safeguards may include requirements that handlers shall file applications and receive approval from the committee for authorization to handle grapefruit under this section, and that such application be accompanied by certification by the intended purchaser or receiver that the grapefruit will not be used for any purpose not authorized by this section.

§ ——.45 Special handling permit.

The committee may issue special handling permits authorizing the transportation of grapefruit in bulk lots to packing facilities outside the production area for preparation for fresh market, which facilities will be handlers under the order. All such lots shall be handled in accordance with the rules and regulations prescribed by the committee with the approval of the Secretary, and shall be subject to assessments, regulations, and the inspection and certification requirements prescribed by §§ .35, ——.41, ——.43 and ——.46. Any special handling permit may be revoked by the committee if the holder of such permit fails to comply with the applicable rules and regulations.

Inspection and Certification

§ ——.46 Inspection and certification.

(a) During any period in which the Secretary has regulated the handling of any variety or varieties of grapefruit pursuant to §§ ——.41, ——.42 or ——.43, each handler shall, prior to the handling of any lot of such variety or varieties, cause such lot to be inspected by an authorized representative of the Federal or Federal-State Inspection Service. Promptly thereafter, such handler shall submit to the committee a copy of the inspection certificate issued thereon. The provisions of this section shall not be applicable to any lot which has been so inspected and a copy of such inspection certificate has been submitted to the committee.

(b) The committee may enter into an agreement with the Federal or Federal-State Inspection Service with respect to the costs of the inspection required by paragraph (a) of this section, and may collect from handlers their respective pro rata shares of such costs.

Reports

§ ——.47 Reports.

(a) The committee may require information from each handler regarding the grade, quality, size, maturity, and variety of each carton contained in each individual shipment, and may require such information to be delivered to the committee at such time and in such manner as the committee may request and upon forms prepared by it.

(b) The committee may require each handler to furnish the following information with respect to grapefruit: the quantity of each variety handled in interstate commerce and to Canada; the quantity of each variety handled by express and parcel post; the quantity of each variety handled for distribution to persons on relief, including donations for charitable purposes; the quantity of each variety handled for consumption in fresh form within the production area; the quantity of each variety exported to countries other than Canada; the quantity of each variety sold or otherwise disposed of for canning or for manufacturing into by-products; and the quantity of each variety disposed of otherwise.

(c) For the purpose of enabling the committee to perform its functions and duties under this part, each handler shall furnish to the committee such other information in such form and at such times and substantiated in such manner as shall be prescribed by the committee and approved by the Secretary.

(d) All reports and records submitted by handlers pursuant to the provisions of this section shall be received by, and at all times be in custody of, one or more designated employees of the committee. No such employee shall disclose to any person, other than the Secretary upon request therefor, data or information obtained or extracted from such reports and records which might affect the trade position, financial condition, or business operation of the particular handler from whom received: *Provided*, That such data and information may be combined, and made available to any person, in the form of general reports in which the identities of the individual handler furnishing the information is not disclosed and may be revealed to any extent necessary to effect compliance with the provisions of this part and the regulations issued thereunder.

§ ——.48 Records.

Each handler shall maintain such records of all grapefruit handled, or otherwise disposed of as will substantiate the required reports and as may be prescribed by the committee. All such records shall be maintained for not less than two years after the termination of the fiscal period in which the transactions occurred or for such lesser period as the committee may direct.

§ ——.49 Verification of reports and records.

For the purpose of assuring compliance and checking and verifying the reports filed by handlers, the Secretary and the committee, through its duly authorized agents, shall have access to any premises where applicable records are maintained, where grapefruit are received, stored, or handled, and, at any time during reasonably business hours, shall be permitted to inspect such handlers' premises and any and all records of such handlers with respect to matters within the purview of this part.

Miscellaneous Provisions

§ ——.50 Compliance.

Except as provided in this part, no person shall handle grapefruit except in conformity to the provisions of this part and the regulations issued thereunder.

§ ——.51 Right of the Secretary.

The members of the committee (including successors and alternates), any agents, employees, or representatives thereof, shall be subject to removal or suspension by the Secretary at any time. Each and every regulation, decision, determination, or other act of the committee shall be subject to the continuing right of the Secretary to disapprove of the same at any time. Upon such disapproval, the disapproved action of the committee shall be deemed null and void, except as to acts done in reliance thereon or in accordance therewith prior to such disapproval by the Secretary.

§ ——.52 Termination.

(a) The Secretary shall terminate or suspend the operation of any or all of the provisions of this part upon finding that such provisions do not tend to effectuate the declared policy of the act.

(b) (1) The Secretary shall terminate the provisions of this part at the end of the then current fiscal period whenever the Secretary finds that continuance is not favored by producers, but any such termination shall be announced before June 15 of such fiscal period.

(2) To determine whether continuance is favored by producers, the required percentages set forth in the act with respect to producer approval of the issuance of a marketing agreement and order regulating the handling of citrus fruits produced in any area producing what is known as California citrus fruits (approval by three-fourths of the producers who, during a representative period, determined by the Secretary, have been engaged within the production area in the production of grapefruit for market; or by producers who, during such representative period, have produced for market at least two-thirds of the volume of grapefruit produced within the production area for market) shall be used. In the event that a referendum is utilized to aid in making this determination, such required percentages for continuance shall be held to be complied with if, of the total number of producers, or the total volume of grapefruit produced for market, as the case may be, represented in such referendum, the percentage favoring continuance is equal to or in excess of the percentage required.

(c) (1) The Secretary shall conduct a referendum no later than May 15, 1985, and no later than that date every fifth year thereafter to ascertain whether continuance of this part is favored by producers: *Provided*, That if an intervening continuance or amendment referendum is conducted and the vote in that referendum is affirmative, the next continuance referendum shall be conducted five years after the date of such latest referendum.

(2) The committee may request that the Secretary conduct a referendum during any fiscal period, provided such request is made prior to March 15.

(d) The provisions of this part shall, in any event, terminate whenever the

provisions of the act authorizing them cease to be in effect.

§ ——.53 Proceedings after termination.

(a) Upon the termination of the provisions of this part, the committee shall, for the purpose of liquidating the affairs of the committee, continue as trustee of all funds and property then in its possession, or under its control, including claims for any funds unpaid or property not delivered at the time of such termination. Any action by said trustee shall require the concurrence of a majority of the trustees

(b) The said trustees shall (1) continue in such capacity until discharged by the Secretary; (2) from time to time account for all receipts and disbursements and deliver all property on hand, together with all books and records of the committee and of the trustees, to such persons as the Secretary may direct; and (3) upon request of the Secretary, execute such assignments or other instruments necessary or appropriate to vest in such person, full title and right to all of the funds, property, and claims vested in the committee or the trustees pursuant thereto.

(c) Any person to whom funds, property, or claims have been transferred or delivered, pursuant to this section, shall be subject to the same obligations imposed upon the committee and upon the trustees.

§ ——.54 Effect of termination or amendments.

Unless otherwise expressly provided by the Secretary, the termination of this part or of any regulation issued pursuant to this part, or the issuance of any amendment to either thereof, shall not (a) affect or waive any right, duty, obligation, or liability which shall have arisen or which may thereafter arise in connection with any provision of this part or any regulation issued under this part, or (b) release or extinguish any violation of this part or any regulation issued under this part, or (c) affect or impair any rights or remedies of the Secretary or any other person with respect to any such violation.

§ ——.55 Duration of immunities.

The benefits, privileges, and immunities conferred upon any person by virtue of this part cease upon its termination, except with respect to acts done under and during the existence of this part.

§ ——.56 Derogation.

Nothing contained in this part is, or shall be construed to be, in derogation or in modification of the rights of the Secretary or of the United States (a) to exercise any powers granted by the act or otherwise, or (b) in accordance with such powers, to act in the premises whenever such action is deemed advisable.

§ ——.57 Personal liability.

No member or alternate of the committee and no employee or agent of the committee shall be held personally responsible, either individually or jointly with others, in any way whatsoever, to any person for errors in judgment, mistakes, or other acts, either of commission or omission, as such member, alternate, employee, or agent, except for act of dishonesty, willful misconduct, or gross negligence.

§ ——.58 Separability.

If any provision of this part is declared invalid or the applicability thereof to any person, circumstance, or thing is held invalid, the validity of the remainder of this part or the applicability thereof to any other person, circumstance, or thing shall not be affected thereby.

§ ——.59 Counterparts.

This agreement may be executed in multiple counterparts and when one counterpart is signed by the Secretary, all such counterparts shall constitute, when taken together, one and the same instrument as if all signatures were contained in one original. * * *

§ ——.60 Additional parties.

After the effective date hereof, any handler may become a party to this agreement if a counterpart is executed by the handler and delivered to the Secretary. This agreement shall take effect as to such new contracting party at the time such counterpart is delivered to the Secretary and the benefits, privileges, and immunities conferred by this agreement shall then be effective as to such new contracting party. * * *

§ ——.61 Order with marketing agreement.

Each signatory handler hereby requests the Secretary to issue pursuant to the act, an order providing for regulating the handling of grapefruit in the same manner as is provided for in this agreement. * * *

A Draft Impact Analysis is available from Malvin E. McGaha, Chief, Fruit Branch, Fruit and Vegetable Division, AMS, U.S. Department of Agriculture, Washington, D.C. 20250: Phone: (202) 447-5975.

Copies of this Recommended Decision are being mailed to known interested persons. Others may be obtained from the Fruit and Vegetable Division, AMS, U.S. Department of Agriculture, Washington, D.C. 20250; or from the Los Angeles Marketing Field Office, Fruit and Vegetable Division, AMS, U.S. Department of Agriculture, 417 South Hill St. Suite 900-B, Los Angeles, California 90013.

Signed at Washington, D.C. on: July 2, 1979.

William T. Manley,

Deputy Administrator, Marketing Program Operations.

[FR Doc. 79-20815 Filed 7-5-79; 8:45 am]
BILLING CODE 3410-90-M

Farmers Home Administration

[7 CFR Parts 1804 and 1924]

Planning and Performing Development Work; Proposed Amendment—Redesignation

AGENCY: Farmers Home Administration, USDA.

ACTION: Proposed rule.

SUMMARY: The Farmers Home Administration has under consideration the redesignation and amendment of its regulations for planning and performing construction and other development. The action is taken because of the general administrative restructuring of the agency regulations. The action will clarify and update the regulations and will provide uniformity between the numbering of FmHA regulations and the Code of Federal Regulations.

DATES: Comments must be received on or before September 4, 1979.

FOR FURTHER INFORMATION CONTACT: Frank Colon, telephone (202) 447-4808 or Lynn Voigt, telephone (202) 447-7207.

SUPPLEMENTARY INFORMATION: The Farmers Home Administration proposes to amend its regulations to establish under Chapter XVIII, Title 7 in the Code of Federal Regulations, a new Part 1924, "Construction and Repair," and redesignate the present Subpart A, "Planning and Performing Development Work," of Part 1804 of this chapter, as Subpart A, "Planning and Performing Construction and Other Development," of the new Part 1924. The specific amendments to the present regulations are as follows:

1. *Section 1924.4* is revised to add nine definitions to conform with newly added sections and clarify old sections of the regulations.

2. *Section 1924.5(f)(1)(ii)* is revised to require the applicant to provide one set of drawings and specifications to FmHA rather than three sets as previously required.

3. *Section 1924.6(a)(3)* is revised to: (a) Specify that surety is required if the construction contract exceeds $100,000 (rather than the existing limit of $60,000), unless waived by the State Director or the National Office; (b) indicate that in cases where contractors and owners have substantially identical interests, the surety bonds provide that the principal and the surety are held and firmly bound into the owner and the U.S.A.; (c) provide for use of an irrevocable letter of credit, cash, bank drafts, certified checks, or postal money orders in lieu of payment and performance bonds; and (d) provide the conditions under which a surety in an amount less than the full contract price may be accepted.

4. *Section 1924.6(a)(11)(i)* is added to require that a preconstruction conference be held.

5. *Section 1924.6(a)(12)(vi)* is revised to clarify final payment provisions to allow a final payment in cases where contract work has not been completed due to circumstances beyond the contractor's control, such as inclement weather or material shortages.

6. *Section 1924.8 and Exhibit B* are added to clarify regulations pertaining to buildings manufactured offsite.

7. *Section 1924.9(a)* is amended to clarify that development inspections made by FmHA are performed to protect the security interest of the Government.

8. *Section 1924.9(b)(3)* is revised to authorize the County Supervisor to waive inspections other than final inspection in cases where a 10-year insured warranty plan is provided.

9. *Section 1924.11(b)* is revised to include a self-imposed review of the District Director's work, as well as a review of the County Supervisor's work in the District Director's jurisdiction.

10. *Section 1924.13(a)* is amended to: (a) Require full architectural services for projects consisting of more than 4 units; (b) provide for the approval by the State Director of the agreement between architect and borrower; (c) clarify the services required of the architect.

11. *Section 1924.13(e)(1)(i)(B)* is added to require 5 percent bid bond, which is required by OMB Circular A-102.

12. *Section 1924.13(e)(1) (i) and (ii)* are amended to include FmHA policies for competitive bidding.

13. *Section 1924.13(e)(1)(v) and (2)(vii)* are revised to require cost certification in cases where there is an identity of interest shared between the applicant and contractor.

14. *Sections 1924.13(e)(1)(vi) and (2)(viii)* are amended to require the use of interim financing, if available, during the construction period.

15. *Section 1924.13(e)(2)* is amended to increase the authority of the State Director to waive the contract method of construction and proceed by the owner-builder method of construction and to clarify the conditions to be met in doing so.

16. Numerous minor editorial changes are also made.

Therefore, as proposed, Subpart A of Part 1924 as amended and redesignated from Subpart A of Part 1804, reads as follows:

PART 1804—PLANNING AND PERFORMING DEVELOPMENT WORKS

Subpart A—Planning and Performing Development Work [Redesignated as Subpart A of Part 1924]

PART 1924—CONSTRUCTION AND REPAIR

Subpart A—Planning and Performing Construction and Other Development

Table of Contents

Sec.
1924.1 Purpose.
1924.2 [Reserved.]
1924.3 Authorities and responsibilities.
1924.4 Definitions.
1924.5 Planning development work.
1924.6 Performing development work.
1924.7 [Reserved.]
1924.8 Development work for buildings manufactured offsite.
1924.9 Inspection of development work.
1924.10 Making changes in the development plan.
1924.11 District Director's review of incomplete development.
1924.12 [Reserved.]
1924.13 Supplemental requirements for more complex construction.
1924.14–1924.50 [Reserved.]
Exhibit A Breakdown of dwelling cost for estimating partial payments.
Exhibit B Manufactured housing guidelines.
Exhibit C List of required drawings and specifications.
Exhibit D Construction standards.
Exhibit E Preconstruction conference.
Exhibit F Payment bond.
Exhibit G Performance bond.
Exhibit H Prohibition of lead-based paints.

Authority: 7 U.S.C. 1989; 42 U.S.C. 1480; delegation of authority by the Secretary of Agriculture, 7 CFR 2.23; delegation of authority by the Assistant Secretary for Rural Development, 7 CFR 2.70.

PART 1924—CONSTRUCTION AND REPAIR

Subpart A—Planning and Performing Construction and Other Development

§ 1924.1 Purpose.

This Subpart prescribes the basic Farmers Home Administration (FmHA) policies, methods, and responsibilities in the planning and performing of construction and other development work for insured Rural Housing (RH), insured Farm Ownership (FO), Soil and Water (SW), single unit Labor Housing (LH), Recreation (RL), and Emergency (EM) loans for individuals. It also provides supplemental requirements for Rural Rental Housing (RRH) loans, Rural Cooperative Housing (RCH) loans, multiunit Labor Housing (LH) loans and grants, and Rural Housing Site (RHS) loans.

§ 1924.2 [Reserved]

§ 1924.3 Authorities and responsibilities.

The County Supervisor and District Director are authorized to redelegate, in writing, any authority delegated to them in this Subpart to the Assistant County Supervisor and Assistant District Director, respectively when determined to be qualified. FmHA construction inspectors are authorized to perform duties under this subpart as authorized in their job descriptions.

§ 1924.4 Definitions.

(a) *Development.* Construction and land development.

(b) *Architectural services.* The services of a professionally qualified person or organization, duly licensed and qualified in accordance with State law to perform architectural services. Architectural services include analysis of project design requirements, creation and development of the project design, preparation of drawings, specifications and bidding requirments, and general administration of the construction contract.

(c) *Construction.* Such work as erecting, repairing, remodeling, relocating, adding to or salvaging any building or structure, and the installation or repair of, or addition to, heating and electrical systems, water systems, sewage disposal systems, walks, steps, driveways, and landscaping.

(d) *Contract documents.* The borrower-contractor agreement, the conditions of the contract (general, supplementary, and other), the drawings, specifications, all addenda issued before executing the contract, all approved modifications thereto, and any other items stipulated as being included in the contract documents.

(e) *Contractor.* The individual or organization with whom the borrower enters into a contract for construction or land development, or both.

(f) *Date of commencement of work.* The date established in a "Notice to

Proceed" or, in the absence of such notice, the date of the contract or other date as may be established in it or by the parties to it.

(g) *Date of substantial completion.* The date certified by the Project Architect/Engineer or County Supervisor when it is possible in accordance with any contract documents and applicable State or local codes and ordinances, and the FmHA approved drawings and specifications, to permit safe and convenient occupancy and/or use of the buildings or development.

(h) *Identity of the interest.* Identity of interest will be construed as existing between the applicant as the party of the first part and general contractors, architects, attorneys, subcontractors, material suppliers, or equipment lessors as parties of the second part under any of the following conditions:

(1) When there is any financial interest of the party of the first part in the party of the second part.

(2) When one or more of the officers, directors, stockholders or partners of the party of the first part is also an officer, director, stockholder, or partner of the party of the second part.

(3) When any officer, director, stockholder or partner of the party of the first part has any financial interest whatsoever in the party of the second part.

(4) When the party of the second part advances any funds to the party of the first part.

(5) When the party of the second part provides and pays on behalf of the party of the first part the cost of any legal services, architectural services or engineering services other than those of a surveyor, general superintendent, or engineer employed by a general contractor in connection with obligations under the construction contract.

(6) When the party of the second part takes stock or any interest in the party of the first part as part of the consideration to be paid them.

(7) When there exist or come into being any side deals, agreements, contracts or undertakings entered into thereby altering, amending, or cancelling any of the required closing documents except as approved by FmHA.

(i) *Insured 10 year warranty plan.* An insured 10 year warranty plan must consist of the following:

(1) The insurance coverage backing the insured plan bust be by an insurance company approved to offer that coverage by the proper regulatory agency of the State in which the property is located.

(2) The entire cost of the insurance coverage must be prepaid by the contractor and coverage automatically transferred to subsequent owners without additional cost.

(3) The insurance coverage must not be cancellable by the insuror.

(4) The protection plan provide and insurance-backed warranty covering the following:

(i) For one year from the effective date, defects caused by faulty workmanship or defective materials.

(ii) During the second year after the effective date, the warranty must continue to cover the wiring, piping, and duct work of the electrical, plumbing, heating, and cooling systems.

(iii) During the third through the tenth years, the warranty must continue to cover structural defects which seriously affect livability.

(5) A system of complaint handling which includes conciliation, and if necessary to resolve matters in dispute, arbitration arranged by the American Arbitration Association or a similar body.

(j) *Land development.* Items such as terracing, clearing, leveling, fencing, drainage and irrigation systems, ponds, forestation, permanent pastures, perennial hay crops, basic soil amendments, pollution abatement and control measures, and other items of land improvements which conserve or permanently enhance productivity.

(k) *Mechanic's and materialmen's liens.* A lien on real property in favor of persons supplying labor and/or materials for the construction for the value of labor and/or materials supplied by them. In some jurisdictions, a mechanic's lien also exists for the value of professional services.

(l) *Minimum property standards.* The Department of Housing and Urban Development (HUD) Minimum Property Standards (MPS) which have been adopted by the FmHA for housing financed with RH, RRH, RCH, LH, and FO loans. The MPS, available in all FmHA County Offices, supplements this subpart with the technical requirements for minimum acceptable design, materials and construction methods to protect the interests of the borrower and FmHA. The MPS may be purchased from the Superintendent of Documents, U.S. Government Printing Office, Washington, D.C. 20402.

(m) *Project representative.* The architect's representative at the construction site who assists in the administration of the construction contract. When authorized by the owner and FmHA, a full-time project representative may be employed.

(n) *Warranty.* A legally enforceable assurance, in writing, that the work done and materials supplied conform to those specified in the contract documents and applicable regulations. For the period of the warranty, the warrantor agrees to repair defective workmanship and repair or replace any defective materials at the expense of the warrantor.

§ 1924.5 Planning development work.

(a) *Extent of development.* For an FO loan, the plans for development will include the items necessary to put the farm in a livable and operable conditions consistent with the planned farm and home operations. For other types of loans, the plans will include those items essential to achieve the objectives of the loan or grant as specified in the applicable regulation.

(b) *Funds for development work.* The total cash cost of all planned development will be shown on Form FmHA 424-1, "Development Plan," except Form FmHA 424-1 may be omitted when (1) all development is to be done by the contract method, (2) adequate cost estimates are included in the docket, and (3) the work, including all landscaping, repairs, and site development work, is completely described on the drawings, in the specifications, or in the contract documents. Sufficient funds to pay for the total cash cost of all planned development must be provided at or before loan closing. Funds to be provided may include loan proceeds and any cash to be furnished by the borrower; proceeds from Agricultural Stabilization and Conservation Service (ASCS), Great Plains, or other program payments; or proceeds from the sale of property in accordance with § 1924.5 (g). Income to be earned or funds to be provided after loan closing will not be considered for financing items of development planned on Form FmHA 424-1.

(c) *Scheduling of development work.* (1) All construction work included in the development plan for RH loans will be scheduled for completion as quickly as practicable and no later than 9 months from the date of loan closing.

(2) Development for farmer program loans will be scheduled for completion as quickly as practicable and no later than 15 months from the date of loan closing unless more time is needed to establish land development practices in the area. However, the completion time for land development work should not exceed 24 months, except for those cases which need more time under a Great Plains Contract.

(d) *Construction.* (1) All new buildings to be constructed and all alterations and repairs to buildings will be planned to conform with good construction practices. All improvements to the property will conform to applicable laws, ordinances, codes, regulations related to safety and the sanitation of buildings, and Exhibit D of this Subpart which supersedes the applicable MPS as related to thermal performance standards.

(i) In new housing, all design materials and construction will meet or exceed the requirements of the appropriate mandatory MPS.

(A) MPS for One and Two Family dwellings No. 4900.1.

(B) MPS for Multifamily Housing No. 4910.1.

(C) The MPS Manual of Acceptable Practices (MPS-MAP) No. 4930.1 is a nonmandatory fully illustrated guidance for better understanding of the mandatory standards.

(D) MPS for solar heating and domestic hot water systems No. 4930.2.

(ii) Existing housing to be purchased with loan funds will meet or exceed the requirements of paragraph 100-3 in MPS 4900.1 or 4910.1. Housing built before 1953, when housing standards were not generally used, will be guided by HUD Handbook No. 4940.4, "Minimum Design Standards for Rehabilitation for Residential Properties." A copy of this handbook is available for review in the FmHA State Office. However, any existing housing should meet the requirements of the MPS as near as practicable, especially those dealing with security, health, fire protection, safety, and construction.

(iii) The design and construction for housing repair loans made with RH funds under § 1822.7(b)(3) of Part 1822 of this chapter (FmHA Instruction 444.1) will, as near as practical, meet the requirements of the MPS as determined by the County Supervisor with assistance from the State Office as necessary.

(iv) Farm Labor housing design and construction standards shall meet or exceed the requirements of the Department of Labor, Bureau of Employment Security. However, in order to be easily converted to rental housing, units other than dormitory units should be in substantial conformity with the design and construction requirements of the MPS for Multifamily Housing No. 4910.1.

(2) Adequate drawings, specifications, and estimates will be provided to fully describe the work. Technical data, tests, or engineering evaluations may be required to support the design of the development. The "List of Required Drawings and Specifications," Exhibit C to this subpart, describes the drawings and the specifications that are required to be included in the application for building construction, and Exhibit A of Subpart D of Part 1804 of this chapter (FmHA Instruction 424.5) describes the drawings that should be included for development of building sites. Farm service buildings should be designed and constructed for adaptation to the local area. In designing and locating farm service buildings, consideration will be given to practices recommended by Agricultural Colleges, the Extension Service (ES), Soil Conservation Service (SCS) and other agricultural authorities.

(3) Whenever possible, the borrower will pay with personal funds any charges made for technical services in connection with the borrower's proposed development. If this cannot be done, the cost of such services may be included in the loan.

(e) *Land development.* (1) In planning land development, consideration will be given to the practices recommended by Agricultural Colleges, ES, SCS, or other recognized agricultural authorities. All land and water development will conform to applicable laws, ordinances, zoning and othe applicable regulations including those related to soil and water conservation and pollution abatement. The County Supervisor also will encourage the applicant to use any cost-sharing and planning assistance that may be available through Agricultural Conservation Programs.

(2) Site and subdivision planning and development should also be guided by the requirements of Subpart D of Part 1804 of this chapter (FmHA Instruction 424.5).

(3) Adequate plans and descriptive material will be provided to fully describe the work.

(i) Plans for land leveling, irrigation, or drainage should include a map of the area to be improved showing the existing conditions with respect to soil, topography, elevations, depth of topsoil, kind of subsoil, and natural drainage, together with the proposed land development.

(ii) When land development consists of, or includes, the conservation and use of water for irrigation or domestic purposes, the information submitted to the County Supervisor will include a statement as to the source of the water supply, right to the use of the water, and the adequacy and quality of the supply.

(f) *Responsibilities for planning development.* Planning construction and land development and obtaining technical services in connection with drawings, specifications, and cost estimates are the responsibilities of the applicant, with such assistance from the County Supervisor or District Director, (whichever is the appropriate loan processing and servicing officer for the type of loan involved), as may be necessary to be sure that the development is properly planned in order to protect FmHA's security.

(1) *Responsibility of the applicant.* (i) The applicant will arrange for obtaining any required technical services from qualified technicians, tradespeople, and recognized plan services, and the applicant will furnish the FmHA sufficient information to describe fully the planned development and the manner in which it will be accomplished.

(ii) When items of construction or land development require drawings and specifications, they will be sufficiently complete to avoid any misunderstanding as to extent, kind, and quality of work to be performed. Inadequate drawings and specifications are not acceptable. The applicant will provide the FmHA with one copy of the drawings and specifications. Approval will be indicated by the applicant and acceptance for the purposes of the loan indicated by the County Supervisor or District Director on all sheets of the drawings and at the end of the specifications, and both instruments will be a part of the loan docket. After the loan is closed, the borrower will retain a confirmed copy of the approved drawings and specifications, and provide another confirmed copy to the contractor. After the work is completed and materials and labor claims have been paid, the County or District Office approved copy may be returned to the borrower. Items not requiring drawings and specifications may be described in narrative form.

(2) *Responsibility of the County Supervisor or District Director.* In accordance with program regulations for loans and grants they are required to process, the County Supervisor or District Director will:

(i) Visit each farm or site on which the development is proposed. For an FO loan, the County Supervisor and the applicant will determine the items of development necessary to put the farm in a livable and operable condition at the outset.

(ii) Notify the applicant in writing immediately if, after reviewing the preliminary proposal and inspecting the site, the proposal is not acceptable. If the proposal is acceptable, an understanding will be reached with the

applicant concerning the starting date for each item of development.

(iii) Discuss with the applicant the FmHA requirements with respect to good construction and land development practices.

(iv) Advise the applicant regarding drawings, specifications, cost estimates, and other related material which the applicant must submit to the FmHA for review before the loan can be developed. The applicant should be informed of the information necessary in the drawings, how the cost esimates should be prepared, the number of sets of drawings, specifications, and cost estimates required, and the necessity for furnishing such information promptly. The applicant should also be advised that FmHA will provide appropriate specification forms, Form FmHA 424–2, "Description of Materials," and Form FmHA 424–3, "Service Building Specifications." The applicant may, however, use other properly prepared specifications.

(v) Advise the applicant regarding publications, plans, planning aids, engineering data, and other technical advice and assistance available through local, State, and Federal agencies, and private individuals and organizations.

(vi) Review the information furnished by the applicant to determine the completeness of the plans, adequacy of the cost estimates, suitability and soundness of the proposed development and whether the proposed land development complies with applicable policy.

(vii) When appropriate, offer suggestions as to how drawings and specifications might be altered to improve the facility and better serve the needs of the borrower. The County Supervisory or District Director may assist the borrower in making revisions to the drawings. For revisions that require technical determinations which FmHA is not able to make, the applicant will be requested to obtain additional technical assistance.

(viii) Provide the applicant with a written list of changes required in the contract documents. The applicant will indicate approval of the changes and the County Supervisor or District Director will indicate acceptance on all sheets of the drawings, at the end of the specifications, and on all other contract documents. These documents will be part of the loan docket, after the approved changes have been accepted and construction is begun by the contractor.

(ix) Review the proposed method of doing the work and determine whether the work can be performed satisfactorily under the proposed method.

(x) Prepare Form FmHA 424–1, "Development Plan," when applicable in accordance with the Forms Manual Insert (FMI) after a complete understanding has been reached between the borrower and the County Supervisor regarding the development to be accomplished, including the dates each item of development will be started and completed.

(xi) Instruct the applicant not to incur any debts prior to loan closing for materials or labor or make any expenditures for such purposes with the expectation of being reimbursed from loan funds.

(xii) Under certain conditions prescribed in Exhibit H of this Subpart, provide the applicant with a copy of the leaflet, "Lead-Based Paint Hazards, Symptoms, Treatment, and Techniques for Eliminating Hazards," which is Attachment 1 of the Exhibit, and attach to Form FmHA 440–41, "Disclosure Statement for Loans Secured by Real Estate," the warning sheet, "Caution Note on Lead-Based Paint Hazard," which is Attachment 2 of the Exhibit.

(g) *Surplus structures, and use or sale of timber, sand, and stone.* In planning the development the applicant and the County Supervisor should, when practicable, plan to use salvage from old buildings, timber, sand, gravel, or stone from the property. The borrower may sell surplus buildings, timber, sand, gravel, or stone that is not to be used in performing planned development and use net proceeds to pay costs of performing planned development work. In such a case:

(1) An agreement will be recorded in the narrative of Form FmHA 424–1 which as a minimum will:

(i) Identify the property to be sold, the estimated net proceeds to be received, and the approximate date by which the property will be sold.

(ii) Provide that the borrower will deposit the net proceeds in the supervised bank account and apply any excess net proceeds as an extra payment on the loan.

(2) The agreement will be considered by the Government as modifying the mortgage contract to the extent of authorizing and requiring the Government to release the identified property subject to the conditions stated in the agreement without payment or other consideration at the time of release, regardless of whether or not the mortgage specifically refers to Form FmHA 424–1 or the agreement to release.

(3) If the FmHA loan will be secured by a junior lien, before the loan is approved all prior lienholders must give written consent to the proposed sale and the use of the net proceeds.

(4) Releases requested by the borrower or the buyer will be processed in accordance with applicable release procedure in Subpart A of Part 1872 of this chapter (FmHA Instruction 465.1).

(h) *Review prior to performing development work.* Prior to beginning development work, the County Supervisor or District Director will review planned development with the borrower. Adequacy of the drawings and specifications as well as the estimates will be checked to make sure the work can be completed within the time limits previously agreed upon and with available funds. Items and quantities of any materials the borrower has agreed to furnish will be checked, and dates by which each item of development should be started will be checked in order that the work may be completed on schedule. If any changes in the plans and specifications are proposed, they should be within the general scope of the work as originally planned. Changes must be approved and processed in accordance with § 1924.10 of this Subpart. The appropriate procedure for performing development should be explained to the borrower. Copies of FmHA forms that will be used during the period of construction should be given to the borrower. The borrowers should be advised as to the purpose of each form and at what period during construction each form will be used.

(i) *Time of starting development work.* Development work will be started as soon as feasible after the loan is closed. Except is cases in which advance commitments are made according to FmHA Instruction 444.2 (available in any FmHA office) and Subpart H of Part 1822 of this chapter (FmHA Instruction 444.9), or according to § 1924.13(e)(1)(vi)(A) or § 1924.13(e)(2)(viii)(A), no commitments with respect to performing planned development will be made by the County Supervisor, District Director, or the applicant before the loan is closed. The applicant will be instructed that before the loan is closed, debts should not be incurred for labor or materials, or expenditutes made for such purposes, with the expectation of being reimbursed from loan funds except as provided in Subpart C of Part 1904 of this chapter and Subparts C and D of Part 1822 of this chapter (FmHA Instructions 444.1 and 444.5). However, with the prior approval of the National Office, a State Supplement may be

issued authorizing County Superviors to permit applicants to commence welldrilling operations prior to loan closing, provided (1) it is necessary in the area to prove the water supply prior to loan closing, (2) the applicant agrees in writing to pay with personal funds all costs incurred if a satisfactory water supply is not obtained, and (3) any contractors and suppliers understand and agree that loan funds may not be available to make the payment.

§ 1924.6 Performing development work.

All construction work will be performed by one of or a combination of the following methods: Contract, borrower, mutual self-help, or owner-builder. All development work must be performed by a person, firm, or organization qualified to provide the service.

(a) *Contract method.* This method of development will be used for all major construction except in cases where it is clearly not possible to obtain a contract at a reasonable or competitive cost. Work udner this method is performed in accordance with a written contract.

(1) *Forms used.* Form FmHA 424-6, "Construction Contract," should be used; however, other contract documents acceptable to the loan approval official may be used provided they are customarily used in the area and protect the interest of the borrower and the Government with respect to compliance with items such as the drawings, specifications, payments for work and inspections, completion, nondiscrimination in construction work, and acceptance of the work. The United States (including FmHA) will not become a party to a construction contract or incur any liability under it. Form 424-19, "Builder's Warranty" or other approved warranty as described in §§ 1924.4(i) and 1924.9(b)(3), and normal trade warranties on items of equipment will be issued the borrower by the contractor at the completion of:

(i) New building construction,

(ii) Dwelling rehabilitation by the contract method,

(iii) All cases of newly completed and previously unoccupied dwellings, or

(iv) Construction under conditional commitments issued to builders and sellers.

(2) *Contract provisions.* Contracts will have a listing of attachments and the provisions of the contract will include:

(i) The contract sum.

(ii) The dates for starting and completing the work.

(iii) The amount of liquidated damages to be charged.

(iv) The amount, method, and frequency of payment.

(v) Whether or not surety will be provided.

(vi) That changes or additions must have prior written approval of FmHA.

(3) *Surety requirements.* (i) Unless an exceptin is granted in accordance with paragraph (a)(3)(iii) of this section, surety that guarantees both payment and performance in the amount of the contract will be furnished when one or more of the following conditions exist:

(A) The contract exceeds $100,000.

(B) The loan approval official determines that surety appears advisable to protect the borrower against default of the contractor.

(C) The applicant requests surety.

(D) The contract provides for partial payments in excess of the amount of 60 percent of the value of the work in place.

(E) The contract provides for partial payments for materials suitably stored on the site.

(ii) The construction contract must indicate that the contractor will furnish properly executed surety bonds prior to the start of any work. Exhibits F and G of this subpart will be used as the forms of payment bond and performance bond to be provided. Unless non-corporate surety is provided, the surety bonds may only be obtained from a corporate bonding company listed on the current Department of The Treasury Circular 570 (published annually in the Federal Register), as holding a certificate of authority as an acceptable surety on Federal bonds and as legally doing business in the State where the land is located. Non-corporate sureties are not recommended and the State Director will be responsible for determining the acceptability of the individual or individuals proposed as sureties on the bonds. Non-corporate sureties must provide adequate protection, and the individual or individuals proposed as sureties must collectively have cash or other liquid assets easily convertible to cash in an amount at least equal to 25 percent more than the contract amount. Fees charged for non-corporate sureties may not exceed fees charged by corporate sureties on bonds of equal amount, and in no case may surety be provided by the applicant or any person or organization with an indentity of interest in the applicant's operation. The United States (including FmHA) will incur no liability related in any way to a performance or payment bond provided in connection with a construction contract. FmHA will be named as a co-obligee in the performance and payment bonds unless prohibited by State law. Bonds must comply with local statutory requirements.

(iii) When an experienced and reliable contractor cannot obtain payment and performance bonds meeting the surety requirements of § 1924.6 (a) (3) (ii) above, the State Director may entertain a request from the applicant for an exception to the surety requirements. The applicant's request must specifically state why the proposed contractor is unable to obtain payment and performance bonds meeting the surety requirements, and why it is financially advantageous for the applicant to award the contract to the proposed contractor without the required bonds. If the applicant's request is reasonable and justified, and if the proposed contractor is reliable and experienced in the construction of projects of similar size, design, scope, and complexity, the State Director may grant an exception to the surety requirements for loans or grants within the State Director's approval authority and accept one of the following:

(A) An unconditional and irrevocable letter of credit issued by a lending institution which has been reviewed and approved by OGC. In such cases, the construction contract must indicate that the contractor will furnish a properly executed letter of credit from a lending institution acceptable to FmHA prior to the start of any work. In addition, the letter of credit must stipulate that the lending institution, upon written notification by FmHA of the contractor's failure to perform under the terms of the contract, will advance funds up to the amount of the contract (including all FmHA approved contract change orders) to satisfy all prior debts incurred by the contractor in performing the contract and all funds necessary to complete the work. Payments may be made to the contractor in accordance with § 1924.6 (a) (12) (i) (C) as if full surety bonds were being provided.

(B) If a letter of credit satisfying the conditions of (A) above cannot be obtained, the State Director may accept for deposit into a supervised bank account, cash, bankdrafts, certified checks, and postal money orders, in the amount of the contract. In such cases the construction contract must indicate that the contractor will furnish the required deposit prior to the start of any work. Payments may be made to the contractor in accordance with § 1924.6(a)(12)(i)(C) as if full surety bonds were being provided.

(C) When the provisions of Sections (A) or (B) above can be met except that surety, a letter of credit, or deposits are not obtainable in full amount of the

contract, the State Director may accept an amount less than the full amount of the contract provided all of the following conditions are met:

(1) The contractor provides surety, a letter of credit, or deposits in the greatest amount possible, and provides documentation indicating the reasons why amounts exceeding the proposed amount cannot be provided.

(2) The applicant agrees to the amount of surety, letter of credit, or deposits proposed, and the State Director determines that the applicant has the financial capability to withstand any financial loss due to default of the contractor.

(3) In the opinion of the State Director, the proposed amount and the method of payment will provide adequate protection for the borrower and the Government against default of the contractor.

(4) The contract provides for partial payments not to exceed 90 percent of the value of the work in place for that portion of the total contract which is guaranteed by an acceptable surety, letter of credit, or deposits, and partial payments not to exceed 60 percent of the value of the work in place for that portion of the total contract which is not guaranteed by surety, letter of credit, or deposits.

Example

Contractor has a surety bond which guarantees payment and performance in an amount of $150,000 which represents 75 percent of the total contract amount of $200,000. The contractor's first request for payment appears thus:

Value of work in place is	$10,000
Payment for work guaranteed by surety=75 percent×$10,000×90 percent	6,750
Payment for work not guaranteed by surety=25 percent×$10,000×60 percent	1,500
Authorized payment	8,250

Each partial payment shall reflect values for work guaranteed by surety, letter of credit, or deposits, and work not so guaranteed.

(4) *Equal opportunity.* Section 1901.205 of Subpart E of Part 1901 of this chapter (FmHA Instruction 1901-E) applies to all loans or grants involving construction contracts and subcontracts in excess of $10,000.

(5) *Labor provisions.* The provisions of Subpart D of Part 1901 of this chapter concerning wage and labor requirements will apply when the contract involves either LH grant assistance, or 9 or more units in a project being assisted under the HUD Section 8 housing assistance payment program for new construction.

(6) *Historical and archeological preservation.* The provisions of Subpart F of Part 1901 of this chapter concerning the protection of historical and archeological properties will apply to all loans and grants. These provisions have special applicability to multiple family housing projects of 25 or more dwelling units or building sites, and to development in areas designated by SCS as Resource Conservation and Development (RC&D) areas. (See FmHA Instruction 1942-I, available in FmHA Offices.

(7) *Air and water acts.* Under Executive Order 11738, all loans or grants involving construction contracts for more than $100,000 must meet all the requirements of Section 114 of the Clean Air Act (42 U.S.C. 1857 C-9) and Section 308 of the Water Pollution Control Act (33 U.S.C. 1813). (See § 1942.18 (i)(2) (vi) (G) of FmHA Instruction 1942-A, available at FmHA offices.)

(8) *Architectural barriers.* In accordance with the Architectural Barriers Act of 1968, Pub. L. 90-480 (424.S.C. 4253), all facilities financed with FmHA loans and grants and which are accessible to the public or in which physically handicapped persons may be employed or reside must be developed in compliance with this Act.

(9) *Natural Environmental Policy Act.* The provisions of Subpart G of Part 1901 of this chapter concerning Environmental Impact Assessments and Statements will apply to all loans and grants including those where 5 or more units in a project are being assisted under the HUD Section 8 housing assistance payment program for new construction.

(10) *Obtaining bids and selecting contractor.* (i) Contracts may be awarded through competitive bidding or by direct selection and negotiation.

(ii) Competitive bidding should be encouraged. The borrower should obtain bids from as many qualified contractors, dealers, or tradespeople as feasible depending on the method and type of construction.

(iii) When a price has already been negotiated by an applicant and a contractor, whether additional negotiation or bids will be required is a matter of judgment. Additional negotiation or bids will not be required if:

(A) The construction is of the size and type that can appropriately be financed with an FmHA loan;

(B) The cost of the construction compares favorably with the cost of similar construction that has recently been completed in the area;

(C) The applicant clearly has the ability to repay the loan and to make any downpayment that may be required; and

(D) The proposed contract is with a reliable contractor.

(iv) If the conditions of paragraph (a)(10)(iii) of this section cannot be met, additional negotiations or bids should be required, or the applicant may need to start with an entirely new plan in order to obtain adequate development within the applicant's ability to pay.

(v) If the award of the contract is by competitive bidding, Form FmHA 424-5, "Invitation for Bid (Construction Contract)," or another similar invitation bid form may be used. All contractors from whom bids are requested should be informed of all conditions of the contract including the time and place of opening bids. When applicable, copies of Forms FmHA 424-6, "Construction Contract," and FmHA 400-6, "Compliance Statement," also should be provided for their information.

(11) *Awarding the contract.* The borrower, with the assistance of the County Supervisor or District Director, will consider the amount of the bids or proposals, the length of construction time required, and the contractor's qualifications to perform the work. On the basis of these considerations, the borrower will select and notify the contractor.

(i) Before work commences, there will be a preconstruction conference between the borrower(s), contractor, architect (if applicable), and the County Supervisor, District Director, or other FmHA employee having a knowledge of contracts and construction practices. During this discussion, a mutual understanding will be reached on the items shown in Exhibit E of this Subpart.

(ii) A brief summary of the items covered should be entered in the running case record.

(iii) The contract will then be prepared and executed and copies distributed in accordance with the FMI for Form FmHA 424-6.

(iv) Within 10 days after a borrower/contractor's contract or subcontract in excess of $10,000 is received in the FmHA County or District Office, the responsible FmHA Official will send a report similar in form and content to Exhibit C of Subpart E of Part 1901 of this Chapter, (FmHA Instruction 1901-E) to the Director, Office of the Federal Contract Compliance Programs, U.S. Department of Labor, Washington, D.C. 20210. The information for this report should be obtained from the contractor when the contract is awarded.

(12) *Payments for work done by the contract method.* (i) Payments will be made in accordance with one of the following methods:

(A) The "One Lump-Sum" payment method will be used when the payment will be made in one lump-sum for the whole contract.

(B) The "Partial Payments not to exceed 60 percent of the value of the work in place" payment method will be used when the contractor does not provide surety bond, a letter of credit, or deposits.

(C) The "Partial Payments in the amount of 90 percent of the value of the work in place and of the value of the materials suitably stored at the site" payment method will be used when the contractor provides a surety bond equal to the total contract amount.

(D) The "Partial Payments which reflect the portions of the contract amount which is guaranteed" method will be used when the contractor provides surety bonds, a letter of credit, or deposits less than the total amount of the contract in accordance with the provisions of § 1924.6(a)(3)(iii)(C)(4).

(ii) When Form FmHA 424-6, "Construction Contract" is used, the appropriate payment clause will be checked and the other payment clauses not used will be effectively crossed out.

(iii) When a contract form other than Form FmHA 424-6 is used, the payment clause must conform with § 1924.6(a)(12)(i) and the appropriate clause as set forth in Form FmHA 424-6.

(iv) The borroweer and FmHA must take precautionary measures to see that all payments made to the contractor are properly applied against bills for materials and labor procured under the contract. Prior to making any partial payment on any contract where a surety bond is not used, the contractor will be required to furnish the borrower and the FmHA with a statement showing the total amount owed to date for materials and labor procured under the contract. The contractor also may be required to submit evidence showing that previous partial payments were applied properly. When the borrower and the County Supervisor or District Director have reason to believe that partial payments may not be applied properly checks may be made jointly to the contractor and persons who furnished materials and labor in connection with the contract.

(v) When partial payments are requested by the contractor and approved by the owner, the amount of the partial payment will be determined by either of the following methods:

(A) Based upon the percentage complete as shown on a recently completed and properly executed Form FmHA 424-12, "Inspection Report," or

(B) Based upon an application for payment containing an estimate of the value of work in place which has been prepared by the contractor and accepted by the borrower and FmHA. When the contract provides for partial payments for materials satisfactorily stored at the site, the application for payment may include these items. Prior to receiving the first partial payment, the contractor should be required to submit a schedule of prices or values of the various phases of the work aggregating the total sum of the contract such as excavation, foundations, framing, roofing, siding, mill work, painting, plumbing, heating, electric wiring, and so forth, made out in such form as agreed upon by the borrower, FmHA, and the contractor. In applying for payments, the contractor should submit a statement based upon this schedule. See Exhibit A, "Breakdown of Dwelling Cost for Estimating Partial Payments," for guidance in reviewing the contractor's schedule of prices, and also guidance in computing the value of the work in place.

(vi) Final payment.

(A) Final payment of the amount due on the contract will be made only upon completion of the whole contract and acceptance of the work by the borrower and FmHA and compliance by the contractor with all terms and conditions of the contract. If the contractor is unable to complete portions of the work required under the contract because of circumstances beyond the contractor's control (such as inclement weather or material shortages), the following action may be taken if the delay in completion is expected to exceed 30 days and the structure is substantially complete, habitable, and usable:

(1) Form FmHA 424-7, "Contract Change Order," will be prepared deleting the incomplete items from the contract. The contract price will be reduced by an amount equal to twice the amount estimated by the contractor and approved by the owner and FmHA to complete these items.

(2) A new contract will be executed by the owner and contractor for the completion of these items. The amount of the new contract will be equal to the reduction in the old contract and the time period shall be consistent to the time actually needed to complete construction depending on the circumstances which caused the delay. In no case should the construction period on the new contract exceed 6 months.

(3) Final payment of the reduced amount of the original contract may be made subject to the provisions contained in this subpart.

(B) Prior to making final payment on the contract when a surety bond is not used, FmHA will be provided with a Form FmHA 424-9, "Certificate of Contractor's Release", and Form FmHA 424-10, "Release by Claimants," executed by all persons who furnished materials or labor in connection with the contract, unless pursuant to a State Supplement, Form FmHA 424-10 is not required. The borrower should furnish the contractor with a copy of the "Release by Claimants" form at the beginning of the work in order that the contractor may obtain these releases as the work progresses. The State Director may issue a State Supplement which:

(1) Will not require the use of Form FmHA 424-10, if, under existing State statutes, the furnishing of labor and materials gives no right to a lien against the property, or

(2) Will make the use of Form FmHA 424-10 optional in those cases in which, because of the nature of the work and the reputation of the contractor, the County Supervisor or District Director and the borrower have reason to believe that no claims or liens will be made against the borrower or the property. When Form FmHA 424-10 is not used, the contractor will execute Form FmHA 424-9 with the last paragraph deleted.

(b) *Borrower method.* The borrower method means performance of work by or under the direction of the borrower, using one or more of the ways specified in this paragraph. Development work may be performed by the borrower method only when (1) it is not practicable to do the work by the contract method, (2) the borrower possesses or arranges through an approved self-help plan for the necessary skill and managerial ability to complete the work satisfactorily, (3) such work will not interfere seriously with the borrower's farming operation or work schedule, and (4) the County Office caseload will permit a County Supervisor to properly advise the borrower and inspect the work.

(1) *Ways of performing the work.* The borrower will:

(i) Purchase the material and equipment and do the work.

(ii) Utilize lump-sum agreements for (A) minor items or minor portions of items of development, the total cost of which does not exceed $3,500 per agreement, such as labor, material, or labor and material for small service buildings, repair jobs, or land development, or (B) material and

equipment which involve a single trade and will be installed by the seller, such as the purchase and installation of heating facilities, electric wiring, wells, painting, liming, or sodding. All agreements will be in writing, however, the County Supervisor may make an exception to this requirement when the agreement involves a relatively small amount.

(2) *Acceptance and storage of material on site.* The County Supervisor will advise the borrower that the acceptance of material as delivered to the site and the proper storage of material will be the borrower's responsibility.

(3) *Payment for work done by the borrower method*—(i) *Payments for labor.* Before the County Supervisor countersigns checks for payment of labor, the borrower must submit a completed Form FmHA 424–11, "Statement of Labor Performed," for each hired worker performing labor during the pay period. Ordinarily, checks drawn in payment for labor will be made payable to the workers involved. However, under justifiable circumstances, when the borrower has made payment for labor with personal funds and has obtained signatures of the workers on Form FmHA 424–11 as having received payment, the County Supervisor may countersign a check made payable to the borrower for reimbursement for these expenditures. Under no circumstances will the County Supervisor permit loan funds or funds withdrawn from the supervised bank account to be used to pay the borrower for the borrower's own labor or labor performed by any member of the borrower's household.

(ii) *Payments for equipment, materials or lump-sum agreements.* (A) Before the County Supervisor countersigns checks in payment for equipment or materials, the County Supervisor must normally have possession of an invoice from the seller covering the equipment or materials to be purchased. In case an invoice from the seller is not available at the time the check is issued, an itemized statement of the equipment or materials to be purchased may be substituted for such an invoice until a paid invoice from the seller is furnished the County Supervisor, at which time the itemized statement may be destroyed.

(B) When an invoice from the seller is available at the time the check is drawn, there will be indicated on the check the invoice number and, if necessary, the purpose of the expenditure may also be shown. If the invoice is unnumbered, the invoice date will be inserted on the check.

(C) The check number and date of payment will be indicated on each paid Form FmHA 424–11, "Statement of Labor Performed" invoice, itemized statement for materials, and written lump-sum agreement.

(D) Ordinarily, checks drawn in payment for equipment or materials will be made payable to the seller. Under justifiable circumstances, when the borrower has made payment for equipment or materials with personal funds and furnished a paid invoice from the seller, the County Supervisor may countersign a check made payable to the borrower, for reimbursement for these expenses.

(E) When an invoice includes equipment or materials for more than one item of development, the appropriate part of the cost to be charged against each item of development will be indicated on the invoice by the borrower, with the assistance of the County Supervisor.

(F) Payment made under lump-sum agreements will be made only when all items of equipment and materials have been furnished, labor has been performed as agreed upon, and the work has been accepted by the borrower and FmHA.

(G) Each paid Form FmHA 424–11, invoice, itemized statement for material, and written lump-sum agreement shall be given to the borrower as provided in Exhibit B to FmHA Instruction 2033–A (available in any FmHA Office).

(c) *Mutual self-help method.* The mutual self-help method is performance of work by a group of families by mutual labor under the direction of a construction supervisor, as described in Exhibit A of Subpart A of Part 1822 of this chapter (FmHA Instruction 444.1). The ways of doing the work, buying materials, and contracting method for special services are like those used for the borrower method. Materials can be bought jointly by the group of families, but payments wil be made individually by each family. In the case of RH loans to families being assisted by self-help technical assistance (TA) grantees financed in accordance with Subpart I of Part 1933 of this chapter, the County Supervisor may make payment for material and necessary contract work from the RH individual loan accounts directly to the TA grantee, provided the District Director determines that:

(1) The grantee acts in the same capacity as would a construction manager in the group purchase of material and services.

(2) The grantee has an adequate bookkeeping system approved by the District Director to assure that funds of each RH account are properly distributed and maintained.

(3) The grantee receives no compensation in the way of profit or overhead for this service, and all discounts and rebates received in connection with the purchase of materials or services are passed on to the participating families.

(4) The TA grantee must have records showing that the cost of the materials and services were prorated to each borrower's account in relation to the actual material and service usage of each borrower.

(d) *Owner-builder method.* This method of construction applies only to RRH loans made under Subpart D of Part 1822 of this chapter (FmHA Instruction 444.5). Regulations governing this method are found at § 1924.13(e)(2).

§ 1924.7 [Reserved]

§ 1924.8 Development work for buildings manufactured offsite.

(a) Exhibit B of this subpart will apply to all loans involving dwelling units manufactured offsite.

(b) Complete drawings and specifications will be required as prescribed in Section 100 of the MPS. Each set of drawings will contain the design of the foundation system required for the soil and slope conditions of the particular site on which the manufactured house is to be placed.

(c) The manufacturer will provide a letter of certification stating that the building has been built substantially in accordance with the plans and specifications. Any deviation from the plans and specifications will be described in the letter of certification.

(d) In every case, the County Supervisor or District Director will make field inspections of the foundation, (Stage 1) of the building when it is erected or placed on the foundation, (Stage 2) and of the final completed onsite development (Stage 3). The second stage inspection should be made during the time and in no case later than 2 working days after the crews are on the site and the house is being erected or placed on the foundation. This second stage field inspection will be made to determine compliance with the accepted drawings and specifications.

(e) Periodic plant inspections may be performed by the FmHA employee responsible for such inspections in the area in which the manufacturing plant or material supply yard is located.

(1) Inspections will be made in the plants if the type construction method used would restrict adequate inspections on the building site.

(2) Plant inspections will be made as often as necessary. However, after initial inspection and acceptance of the building submitted, inspection should be made only when it appears advisable to ascertain the performance and continuing stability of accepted materials and construction.

(f) Only one contract will be accepted for the completed house on the site owned or to be bought by the borrower. The manufacturer of the house or the manufacturer's agent may be the prime contractor for delivery and erection of the house on the site or a builder may contract with the borrower for the complete house in place on the site. Such contracts should provide that payments will be made only for work in place on the borrower's site.

(g) Payments for structures manufactured offsite will be made in accordance with the terms of the contract and in compliance with § 1924.6(a)(12).

§ 1924.9 Inspection of development work.

The following policies will govern the inspection of all development work.

(a) *Responsibility for inspection.* The County Supervisor or District Director, accompanied by the borrower when practicable, will make final inspection of all development work and periodic inspections as appropriate to protect the security interest of the government. The borrower will be responsible for making inspections necessary to protect the borrower's interest. The inspections by FmHA are solely to determine the adequacy of FmHA's security and not for the benefit of the borrower. On jobs involving difficult technical problems, the County Supervisor may request the assistance of the State Office. Qualified technicians from SCS or the State University Cooperative Extension Service may be requested to assist on any such jobs.

(b) *Frequency of inspections.* The County Supervisor or District Director will inspect development work as frequently as necessary to assure that construction and land development conforms with the plans and specifications. The final inspection will be made at the earliest possible date after completion of the planned development. When several major items of development are involved, final inspection will be made upon completion of each item.

(1) For new buildings and additions to existing buildings, inspections will be made at the following stages of construction and at such other stages of construction as determined by the County Supervisor or District Director except as modified by § 1924.9(b)(3) below.

(i) *Stage 1.* Customarily, the initial inspection in construction cases is made just prior to or during the placement of concrete footings or monolithic footings and floor slabs. At this point, foundation excavations are complete, forms or trenches and steel are ready for concrete placement and the subsurface installation is roughed in. However, when it is not practicable to make the initial inspection prior to or during the placement of concrete, the County Supervisor or District Director will make the initial inspection as soon as possible after the placement of concrete and before any backfill is in place.

(ii) *Stage 2.* The Stage 2 inspection will be made when the building is enclosed, structural members are still exposed, roughing in for heating, plumbing and electrical work is in place and visible, and wall insulation and vapor barriers are installed. Customarily, this is prior to installation of brick veneer or any interior finish which would include lath, wallboard and finish flooring.

(iii) *Stage 3.* The final inspection will be made when all on-site and off-site development of the structure has been completed and the structure is ready for occupancy or its intended use.

(2) For rehabilitation of existing buildings, inspections will be made in accordance with § 1924.9 (b) (1) (ii) and (iii) above, and at such other stages of construction to assure that construction is being performed in a professional manner and in accordance with the FmHA approved drawings and specifications.

(3) For cases when the County Supervisor determines that the property will be covered by an insured 10 year warranty plan, only the final inspection is required. A copy of the warranty plan must be submitted to the County Supervisor before construction begins for this inspection exception to apply.

(4) Arrangements should be made to have the borrower join the County Supervisor or the District Director in making periodic inspections as often as necessary to provide a mutual understanding with regard to the progress and performance of the work.

(5) The borrower should make enough periodic visits to the site to be familiar with the progress and performance of the work, in order to protect the borrower's interest. If the borrower observes or otherwise becomes aware of any fault or defect in the work or nonconformance with the contract documents, the borrower should give prompt written notice thereof to the contractor with a copy to the County Supervisor or District Director responsible for servicing the type of loan or grant involved.

(6) The borrower should, when practical, join the County Supervisor or District Director in making all final inspections.

(7) When irrigation equipment and materials are to be purchased and installed, a performance test under actual operating conditions by the person or firm making the installation should be required before final acceptance is made. The test should be conducted in the presence of the borrower, a qualified technician, and, when practicable, the County Supervisor. If the County Supervisor is not present at the performance test, the County Supervisor should request the technician to furnish a report as to whether or not the installation meets the requirements of the plans and specifications.

(8) For irrigation and drainage construction or any dwelling construction where part or all of the work will be buried or backfilled, interim inspections should be made at such stages of construction that compliance with plans and specifications can be determined.

(c) *Recording inspections and correction of deficiencies.* All periodic and final inspections made by the County Supervisor or District Director will be recorded on Form FmHA 424–12, "Inspection Report," in accordance with the FMI for the form. The County Supervisor or District Director will be responsible for following up on the correction of deficiencies reported on Form FmHA 424–12. When an architect is providing services on a project, the District Director should notify the architect immediately of any fault or defect observed in the work or of any nonconformance with the contract document. If the borrower or the contractor refuses to correct the deficiencies, the District Director will report the facts to the State Director who will determine the action to be taken. No inspection will be recorded as a final inspection until all deficiencies or nonconforming conditions have been corrected.

(d) *Warranty period.* Form FmHA 424–19, "Builder's Warranty", or an acceptable insured 10 year warranty plan on RH loans for new construction will be provided by the contractor or warrantor. When an acceptable insured 10-year warranty has been provided, the County Supervisor will assist the borrower to the extent necessary under the provisions of the warranty and

Subpart C of Part 1918 of the chapter. When the contractor provides the warranty on Form FmHA 424–19, the County Supervisor or the District Director will take the following action prior to the expiration of the first year of the warranty period:

(1) As soon as the warranty has been executed, the follow-up date for sending Form FmHA 424–21, "Notice of Expiration of Builder's Warranty," will be posted to the "Servicing and Supervision" section of the Management System card.

(2) Form FmHA 424–21 is provided for use in notifying the borrower of the expiration date of the Builder's Warranty. This letter will be mailed to the borrower early in the second month preceding the expiration date of the warranty period.

(3) If the County Supervisor or District Director does not hear from the borrower within 30 days, it can reasonably be assumed that no complaint exists or that any complaint has been satisfied, unless information to the contrary has been received.

If the borrower notifies FmHA that any complaint has not been satisfied, an on-site inspection shall be made as early as possible, but not later than one month preceeding the expiraton date of the warranty period. The results of the inspection visit will be recorded on Form FmHA 424–12, "Inspection Report." If the borrower's complaints are justified, the case should be handled in accordance with Subpart C of Part 1918.

(e) *Acceptance by responsible public authority.* When local (city, county, State, or other public authority) codes and ordinances require inspections, final acceptance by the local inspector having jurisdiction will be required prior to final inspection or acceptance by FmHA.

§ 1924.10 Making changes in the development plan.

Changes in the planned development may be made at the request of the borrower in accordance with this section.

(a) *Authority of the County Supervisor.* The County Supervisor is authorized to approve changes in the planned development involving loans and grants within the County Supervisor's approval authority provided:

(1) The change is for a purpose for which loan funds for the type of loan involved can be used.

(2) Sufficient funds are deposited in the borrower's supervised bank account or with the interim lender, as approriate, to cover the contemplated changes when the change involves additional funds to be furnished by the borrower.

(3) The change will not adversely affect soundness of the operation or FmHA's security. If uncertain as to the probable effect the change would have on the soundness of the operation or FmHA security, the County Supervisor will obtain advice from the District Director on whether to approve the change.

(4) If a surety has been provided on the full amount of the construction contract, the aggregate amount of all contract change orders on Form FmHA 424–7 "Construct Change Order", or other acceptable form will not exceed 20 percent of the original contract amount. Change orders for contracts on which surety has been provided which increase the orignal contract amount by more than 20 percent may only be approved if additional surety is provided in the full revised amount of the contract. For purposes of this paragraph, letters of credit and deposits are not considered surety.

(5) Change orders for contracts on which letters of credit or deposits have been provided on the full amount of the contract which will increase the original contract amount are approved only if additional letters of credit or deposits are provided in the full revised amount of the contract.

(b) *Authority of the District Director.* The District Director is authorized to approve changes in the development planned with RRH, RCH, and RHS loans and LH loans and grants within the District Director's approval authority, provided the conditions in § 1924.10 (a) above have been met. For such loans in excess of the District Director's approval authority, the borrower's request with the District Director's recommendation will be forwarded to the State Director for consideration.

(c) *Recording and initialing changes.* Changes made in Form FmHA 424–1. "Development Plan", in the working drawings, or in the plans and specifications will be initialed by the borrower, the contractor, and the County Supervisor.

(1) Any changes which involve an increase or decrease in the cash cost, transfer of funds between items, or in addition or deletion of items of development will be summarized on the front of Form FmHA by striking through the original figures or items and writing in the changes.

(2) Extensions of time will be shown only on the front of Form FmHA 424–1 by striking out the existing date and writing in the new date.

§ 1924.11 District Director's review of incomplete development.

During monthly District Office work organization meetings and during regular visits to the County Office, the District Director will review the progress that is being made in completing development financed with loans within the District Director's and County Supervisor's responsibility.

(a) Once each year the District Director will make a comprehensive review of all development work not completed within the time scheduled. For incomplete development financed with loan or grant funds within the responsibility of the District Director, the District Director will take the necessary actions to assure that the borrower or grantee completes the planned development. For incomplete development financed with loan or grant funds within the responsibility of the County Supervisor, the District Director will give the necessary direction to the County Supervisor to assure completion of the work. In connection with these responsibilities, the District Director will consider:

(1) The current farm and home operations with respect to the need for the development as originally planned.

(2) Revisions to the development plan.

(3) Funds remaining in the supervised bank account.

(4) Need for additional funds.

(5) Personal funds that could be furnished by the borrower.

(6) Estimated completion dates.

(7) The borrower's attitude with respect to completing the development.

(b) After a complete review of the status of development in both the District and County Offices has been made, the District Director will make a written a report to the State Director which will include observations and recommendations regarding incomplete development. The report may be included in the District Director's regular report, and will include:

(1) The number of cases in which borrowers have not completed their development within 9, 15 or 24 months when authorized, and also the number of cases in which funds have been exhausted and the work is incomplete.

(2) The number of borrowers who have not completed their development within three years from the loan closing, and indicate the action that was taken in each such case.

(c) If the borrower has not completed development work within three years after the date of loan closing and the District Director has determined that the borrower cannot or will not complete the development, the District Director

will so indicate on Form FmHA 424-1, "Development Plan", and request the State Director to withdraw, for application on the loan, any unused development funds remaining in the borrower's supervised bank acount.

§ 1924.12 [Reserved]

§ 1924.13 Supplemental requirements for more complex construction.

This Section includes additional provisions that apply to planning and conduct of construction work on all multiple family housing projects and other projects that are more extensive in scope and more complex in nature than individual housing units or farm buildings. This paragraph will apply in addition to the requirements contained in §§ 1924.5 and 1924.6.

(a) *Architectural services.* Complete architectural services, as defined in 1924.4 (b) are recommended on all projects. They are required for projects involving an LH grant and for all other multiple housing projects consisting more than 4 units unless prior consent to waive complete architectural services is obtained from the National Office. If the applicant or contractor is an architect or organization with architectural capability, the applicant must, nevertheless, hire an independent qualified architect or architecural firm to inspect the construction work and perform other needed services during the construction and warranty phases.

(1) *Exceptions.* Any request for National Office consent to an exception being made for complete architectural services should include the proposed drawings and specifications, method of providing specific services, the comments and recommendations of the FmHA State Architect, and any other pertinent information. The State Director must determine that any services for which an exception is requested can be performed by qualified State or District Office staff members.

(2) *Selecting the architect.* The applicant is responsible for selecting the architect. The District Director with the advice of the State Architect/Engineer should discuss with the applicant the selection of the architect for the job as early as possible to assist in the site selection and participate in early consultations regarding project scope and design.

(3) *Architectural fees.* Fees for architectural services shall not exceed the fee ordinarily charged by the profession for similar work when FmHA financing is not involved. The fee should cover only the architectural services rendered by the architect. Fees for special services rendered by architects, such as the packaging of the loan application or additional non-architectural services, will not authorized to be paid with loan funds.

(4) *Agreement between borrower and architect.* The borrower and the architect will execute a written agreement. The form of agreement must conform with standard professional practices and will provide for the following:

(i) The services listed in § 1924.13 (a) (5) below.

(ii) The amount of the fee and how it will be paid.

(iii) That the agreement not be in full force and effect until approved in writing by the State Director of the State Director's delegate, and it will contain the following provision:

The Farmers Home Administration, as potential lender or insurer of funds to defray the costs of this agreement and without liability for any payments thereunder, hereby approves the form, content and the execution of this agreement.

Date———

FmHA Approval Official

Title———

(5) *Specific services.* Architectural services will include six consecutive phases as follows:

(i) *Schematic design phase.* The architect will:

(A) Consult with the applicant to obtain available information pertinent to the project requirements.

(B) Consult with FmHA State Architect/Engineer about FmHA requirements and procedures.

(C) Assist in preparing the project design after analyzing engineering and survey data on the site selected by the applicant.

(D) Prepare schematic design studies consisting of drawings and other documents illustrating the scale and relationship of project components for the applicant's approval.

(E) Submit estimates of current development costs based on current area, volume, or other unit costs.

(F) When the applicant and FmHA have accepted the schematic design studies and estimated development costs, the project architect may be authorized to proceed with the next phase.

(ii) *Design development phase.* The architect will:

(A) Prepare the design development exhibits from the accepted schematic design studies for approval by the applicant. These exhibits should consist of drawings and other documents to fix and describe the size and character of the entire project as to structural, mechanical, and electrical systems, materials, and other essentials as appropriate.

(B) Submit a further statement of probable construction cost.

(C) Obtain applicant and FmHA approval of drawings, specifications, and authorization to proceed with next phase.

(iii) *Construction documents phase.* The architect will:

(A) Prepare the working drawings and specifications from the approved design development drawings and set forth in detail the requirements for the construction of the entire project in accordance with the applicable regulations and codes; e.g., necessary bidding information, assistance in preparing of bidding forms, conditions of the construction contract, and the form of agreement between applicant/owner and contractor.

(B) Submit a final and more comprehensive statement of probable development cost. It should show a breakdown of the estimated total development cost of the project and the various trades in enough detail for an adequate review.

(C) Obtain the acceptance of FmHA and the applicant for contract documents, including approval of the final drawings and specifications and authorization to proceed.

(D) Discuss with the applicant various items as they develop.

(iv) *Bidding or negotiation phase.* The architect will, as appropriate, for a bidded or negotiated contract:

(A) Assist in review and selection of bidders and submission of contract documents to selected bidders.

(B) Assist in the interpretation of drawings and specifications, and other contract documents.

(C) Receive and tabulate all bids.

(D) Review the bids and the negotiated proposals and assist in the award and preparation of construction contracts.

(v) *Construction phase.* This phase includes the administration of the construction contract. It will commence with the award of the construction contract and end when the borrower makes final payment to the contractor. The architect will:

(A) Advise and consult with the borrower (as the borrower's representative) and issue the borrower's instructions to the contractor, and have the authority to act on behalf of the borrower.

(B) Prepare change orders.

(C) Keep construction accounts and work as the general administrator of the project during construction.

(D) Interpret the contract documents and have the authority to reject all work and materials which do not comply.

(E) Review and approve shop drawings, samples, and other submissions of the contractor for conformance with the design concept and for compliance with the contract documents.

(F) Conduct periodic inspections of all phases of construction to determine compliance with the contract documents and certify as to the amount of work that is in place and materials suitably stored on site for partial payment estimates. These inspections will be augmented, when necessary, by inspections performed by structural, mechanical, and electrical representatives. Periodic inspections should be made as frequently as is necessary to assure that the work conforms with the intent of the contract documents and that a high quality of workmanship is maintained. The State Director may require a full-time project representative in the employ of the project architect or projects with a total development cost of $750,000 or more.

(G) Determine, based on the inspections, the dates of substantial completion and final completion; receive on the borrower's behalf all written guarantees and related documents assembled by the contractor; and issue a final certificate for payment.

(vi) *Warranty phase.* The architect will advise and consult with the borrower, as the borrower's representative, about items to be corrected within the warranty period. The architect will accompany the FmHA representative during the inspection required one month prior to expiration of the warranty period.

(b) *Other professional services.* The State Director, on the recommendation of the State Architect/Engineer, may request that additional professional services be provided. Such services would typically include soils engineering, structural engineering, civil engineering, land planning, or professional cost estimation or certification. Fees for these services may be paid directly by the borrower or by the architect as reimbursable expenses.

(c) *Drawings.* The types and kinds of drawings should be in accordance with Exhibit C of this subpart and Subpart D of Part 1822 of this chapter (FmHA Instruction 444.5).

(1) The drawings must be clear, accurate, and adequately dimensioned and should be of sufficient scale for estimating purposes.

(2) Construction sections and large-scale details sufficient for accurate bidding and for the purpose of correclating all parts of the work should be a part of the general drawings. This is particularly important where the size of a project makes necessary the preparation of the general drawings at a scale of ⅛ inch equals 1 foot or less.

(3) Mechanical and electrical work should be shown on separate plans.

(4) Schedules should be provided for doors, windows, finishes, electrical fixtures, finish hardware, and any other specialty items necessary to clarify drawings.

(d) *Specifications.* Trade-type specifications (specifications divided into sections for various trades) should be used. The specifications should be complete, clear, and concise, with adequate description of the various classes of work shown under the proper sections and headings.

(e) *Methods of administering construction.* Projects involving a total development cost of less than $100,000 which do not include an LH grant may, with the approval of the State Director, follow the contract procedure stated in § 1924.6(a) without modification. Construction of all other projects, however, will be administered by the contract method or owner-builder method as set forth in this paragraph.

(1) *Contract method.* This method of development will be used for all complex construction except in cases where owner-builder method is authorized. Development under this method is done in accordance with § 1924.6(a) except as modified by this paragraph. All construction work will be completed under one written construction contract.

(i) *Competitive bidding methods.* (A) All construction contracts must be awarded on the bais of competitive bidding unless an exception is granted in accordance with § 1924.13(e)(1)(vii) below thereby permitting contract negotiation. The applicant's architect should prepare the bidding documents. Public notice must be given inviting all interested bidders to submit a bid. Prospective bidders may be contacted asking for their bids; however, pubic notice is necessary so that all local contractors have the opportunity to submit a bid.

(B) A bid bond is required of each bidder in an amount equivalent to five percent of the bid price as assurance that the bidder will, upon acceptance of the bid, execute the required contract documents within the time specified.

(C) The construction contract will be awarded based on the contract cost, the length of construction time required, and the builder's qualifications.

(D) If advertising does not provide a satisfactory bid in the opinion of the applicant and FmHA, the applicant shall reject all bids and will then be free to negotiate with bidders or anyone else to obtain a satisfactory contract.

(ii) *Contract documents.* Contract documents will conform with recognized professional practices as prescribed in this paragraph. Such contract documents will contain substantially the following:

Item I—Invitation for Bids (Form FmHA 424-5)
Item II—Information for Bidders
Item III—Bid
Item IV—Bid Bond
Item V—Agreement (Construction Contract)
Item VI—Compliance Statement (Form FmHA 400-6)
Item VII—General Conditions
Item VIII—Supplemental General Conditions
Item IX—Payment Bond (Exhibit F of this Subpart)
Item X—Performance Bond (Exhibit G of this Subpart)
Item XI—Notice of Award
Item XII—Notice to Proceed
Item XIII—Drawings and Specifications
Item XIV—Addenda
Item XV—Contract Change Order (Form FmHA 424-7)
Item XVI—Labor Standards Provisions [Exhibit A to Subpart D of Part 1901 (FmHA Instruction 1901-D) where applicable]
Item XVII—Monthly Employment Utilization Report (Standard Form 257)
Item XVIII—Partial Payment Estimate (Form FmHA 424-18)
Item XIX—Builder's Warranty (Form FmHA 424-19)

(A) Substitution of the term "architect" for "engineer" will be necessary on some of the forms. Other modifications may be necessary in some cases to conform with the nature and extent of the project. All such contract documents and related items will be approved by the State Director, with the assistance of Office of the General Counsel, (OGC) prior to the release of invitations to bid.

(B) Items listed as I through IV and item XI may be omitted when an exception of the competitive bidding requirement is granted in accordance with § 1924.13(e)(1)(vii), thereby permitting a negotiated contract.

(C) All negotiated contracts shall include a provision to the effect that the borrower, FmHA, the Comptroller General of the United States, or any of their duly authorized representatives, shall have access to any books, documents, papers, and records of the contractor which are directly pertinent

to a specific Federal loan program for the purpose of making audit, examination, excerpts, and transcriptions.

(D) Liquidated damages *will* be included in all contracts. The liquidated damage amount must be reasonable and represent the best estimate possible of how much interest or other costs will accrue on the loan, and also represent any loss of rent or other income which would result from a delay in the completion of the project beyond the estimated completion date.

(E) All contracts shall include a provision for compliance with the Copeland "Anti-kick Back" Act (18 U.S.C. 874) as supplemented in Department of Labor regulations (29 CFR, Part 3). This Act prohibits the contractor from inducing any person employed in connection with the construction to give up any part of the compensation to which the person is otherwise entitled.

(F) All contracts will contain a certification by both the applicant and the contractor indicating that there is not now nor will there be an identity of interest between or among the contractor, applicant, architect, engineer, attorney, subcontractors, material suppliers, equipment lessors, or any of their members, directors, officers, stockholders, partners, or benificiaries unless specifically identified to FmHA in writing prior to the award of the contract. All contracts must also indicate that when any identity of interest exists or comes into being, the contractor agrees to provide certification as to the actual cost of the work performed under the construction contract and to have all construction records audited by an independent Certified Public Accountant (CPA) or Licensed Public Accountant (LPA) who will provide an unqualified opinion as to the actual cost of construction.

(G) All contracts on any form other than Form FmHA 424–6, "Construction Contract" must contain the language of clause (D) of Form FmHA 424–6. The language of clause (D) of Form FmHA 424–6 sets forth the Notice of Requirement for Affirmative Action to Ensure Equal Employment Opportunity required by Executive Order 11246, the Equal Opportunity clause published at 41 CFR 60–1.4 (a) and (b), and the Standard Federal Equal Employment Opportunity Construction Contract Specifications required by Executive Order 11246.

(H) State Director's Approval of Contracts. All contracts will contain a provision that they are not in full force and effect until they have been approved by the State Director or the State Director's delegate in writing. Therefore, before loan closing or before the start of construction, whichever occurs first, the State Director or the State Director's delegate will approve the contract form, content, and execution by including the following paragraph at the end of the contract:

The Farmers Home Administration, as potential lender or insurer of funds to defray the costs of this contract, and without liability for any payments thereunder, hereby approves the from, content, and execution of this contract.

Date _____

FmHA Approval Official _____

Title _____

(I) The requirements of § 1924.6(a)(11)(iv) apply to all contracts or subcontracts in excess of $10,000.

(iii) *Surety.* When multiple advances of loan or grant funds are utilized, surety that guarantees both payment and performance in the full amount of the contract will be provided in accordance with § 1924.6(a)(3)(ii). Exceptions to the surety requirements shall be governed by the following:

(A) In accordance with the guidance and recommendations of OMB Circulars A–102 and A–110 exceptions to the surety requirements of § 1924.6(a)(3)(ii) will not be granted for nonprofit organization or public body applicants.

(B) For loans or grants to applicants other than nonprofit organizations or public bodies that are within the State Director's approval authority, the State Director may grant exceptions to the surety requirements in accordance with the provisions of § 1924.6(a)(3)(iii). Before granting such an exception, however, the State Director should obtain the following information from the proposed contractor in order to fully evaluate the experience and capabilities of the contractor:

(*1*) A resume indicating the contractor's history, ability, and experience.

(*2*) A current, dated, and signed financial statement indicating the payment status of the contractor's accounts and any contingent liabilities that may exist.

(*3*) A credit report (obtained at no expense to FmHA) attesting to the contractor's credit standing.

(*4*) A listing of trade references that could be contacted to substantiate the contractor's experience and good standing.

(*5*) Statements from owners for when the contractor has done similar work, indicating the scope of the work and the owner's evaluation of the contractor's performances.

(C) For loans or grants to applicants other than nonprofit organizations or public bodies that are in excess of the State Director's approval authority, the State Director may request National Office authorization to grant one of the exceptions to the surety requirements as indicated in § 1924.6(a)(3)(iii). The following informaiton must be submitted with the request to the National Office:

(*1*) An explanation of why interim financing is not available.

(*2*) An explanation of why the proposed contractor can not obtain surety bonds meeting the requirements of § 1924.6(a)(3)(ii).

(*3*) The information listed in § 1924.13(e)(1)(iii)(B) above.

(*4*) The drawings and specifications for the proposed project, together with the comments of the State architect/engineer.

(*5*) The applicant's written request for an exception as required in § 1924.6(a)(3)(iii).

(*6*) An explanation of why the requirements of § 1924.6(a)(3)(ii)(A) or (B) cannot be met in those cases where the State Director requests authorization to grant an exception as indicated in § 1924.6(a)(3)(iii)(C). When such a request is made, the documentation required of the contractor under that provision must also be forwarded.

(*7*) The State Director's recommendation.

(D) Adequate steps will be taken to protect the interest of the borrower and the government in accordance with the payment provisions of § 1924.6(a)(12)(i) and any alternative as outlined in § 1924.6(a)(3)(iii)(C).

(iv) *Contract cost breakdown.* In any case where the loan approval official feels it appropriate, and prior to the award or approval of any contract in which there is an identity of interest as defined in § 1924.4(h), the contractor and any subcontractor, material supplier, or equipment lessor sharing an identity of interest must provide the applicant and FmHA with a trade-item cost breakdown of the proposed contract amount for evaluation. The cost of any surety or cost certification fee will be included in the proposed contract amount. From FmHA 1924–13, "Estimate and Certificate of Actual Cost" may be used for this purpose.

(v) *Cost certification.* Whenever the State Director determines it appropriate, and in all situations where there is an identity of interest as defined in § 1924.4(h), the contractor and any subcontractor, material supplier, or equipment lessor sharing that identity must provide certification as to the actual cost of the work performed in

connection with the construction contract. All construction records must also be audited by an independent Certified Public Accountant (CPA) or Licensed Public Accountant (LPA) who will provide an unqualified opinion as to the actual cost of construction.

(A) Prior to the start of construction, the contractor and any subcontractor, material supplier, or equipment lessor sharing an identity of interest must submit the ledger-type accounting system that the contractor, subcontractor, material supplier, or equipment lessor and/or the CPA or LPA proposes to set up and use in maintaining a running record of the actual cost. In order to be acceptable, it must allow for a trade-item basis comparison of the actual cost as compared to the estimated cost submitted in accordance with § 1924.13 (e) (1) (iv).

(B) The CPA or LPA will audit the books, accounts, and records of the contractor (and any subcontractor, material supplier, or equipment lessor sharing an identity of interest) concerning the work performed, services rendered, and materials supplied in connection with the construction contract. Upon completion of construction and prior to final payment, the CPA or LPA will provide an unqualified opinion concerning the actual cost. The CPA or LPA must also certify that the audit has been completed in accordance with generally accepted auditing standards, that to the best of the CPA or LPA's knowledge and belief the actual cost of construction performed under the contract is accurate and correct as represented, and that the CPA or LPA has no identity of interest in the applicant, contractor, architect, engineer, attorney, subcontractors, material suppliers, or equipment lessors. The following format is suggested for this certification and it contains the minimum representations acceptable to FmHA:

We have examined the books and records of (Contractor) related to the development of the (project name and case number).

Our examination was made in accordance with generally accepted auditing standards and, accordingly, included such tests of the accounting records and such other auditing procedures as we considered necessary in the circumstances.

In our opinion, the accompanying documentation and Form FmHA 1924–13 present fairly the actual cost, in the amount of $——, of the (project name). It conforms with generally accepted accounting principles and gives effect to the instructions issued by FmHA for the recognition of such costs.

Amounts paid and to be paid are shown as of the close of business ————, 19—.

We certify that we have no financial interest in the Contractor or borrower other than in the practice of our profession.

FmHA reserves the right to determine, upon receipt, whether or not the certified statment of cost is satisfactory to FmHA.

(C) Prior to final payment to anyone required to cost certify, a trade-item breakdown showing the actual cost compared to the estimated cost must be provided to the owner and FmHA. Form FmHA 1924–13, "Estimate and Certificate of Actual Cost," is the form of comparative breakdown that should be used, and contains the certifications required of the applicant and contractor prior to final payment. Fees for overhead (general requirements and overhead) and profit exceeding the amounts shown on the contract cost breakdown(s) provided in accordance with § 1924.13 (e) (1) (iv) may not be paid to any contractor, subcontractor, material supplier, or equipment lessor having or sharing an identity of interest with the applicant. Contract change orders will be processed to adjust the contract amount downward prior to final payment to the contractor if necessary to assure that the fees shown in the certificate of actual cost do not exceed those shown in the contract cost breakdown.

(vi) *Method of payments.* Partial payments may be requested in accordance with the terms of the FmHA approved construction contract on Form FmHA 424–18, "Partial Payment Estimate," or other professionally recognized form that contains the architect's certification, approval of the owner, and conditional acceptance of FmHA as shown on the reverse of Form FmHA 424–18.

(A) If interim financing is available at reasonable rates and terms for the construction period, such financing shall be obtained. Exhibit I to Subpart D of Part 1822 Subchapter B of this chapter (FmHA Instruction 444.5) shall be used to inform the interim lender that FmHA will not close its loan until the project is substantially complete, ready for occupancy, and evidence is furnished indicating that all bills have been paid or will be paid at loan closing for work completed on the project. Upon presentation of proper partial payment estimates approved by the applicant and accepted by FmHA, the interim lender may advance construction funds in accordance with the payment terms of the contract. In no case should partial payments exceed 90 percent of the value of work in place and material suitably stored on site.

(B) When interim financing is not available, payments will be made in accordance with § 1924.6 (a) (12).

(vii) *Exception of competitive bidding.*—(A) *For nonprofit organizations.* All construction contracts for projects to be owned by nonprofit organizations should be awarded on the basis of competitive bidding. However, in exceptional cases and only when justified, the State Director may make an exception to competitive bidding for nonprofit organization applicants, providing all of the following conditions are met:

(*1*) The applicant provides a copy of a duly authorized resolution by its governing body requesting FmHA to permit awarding the construction contract without formal bidding. The reasons for such a request must be fully documented.

(*2*) The State Director determines that the proposed cost of the development compares favorably with the cost of similar projects that have been financed in the area and that the State Director is assured that competitive bidding would not result in a lower price.

(*3*) The proposed contractor must provide surety bonds meeting the requirements of § 1924.6 (a) (3) (ii), and must be experienced in construction of similar size, scope, and complexity, and must be recognized as a reliable builder. The State Director must determine that there is no conflict of interest in the award of the contract to the proposed contractor.

(*4*) The development work meets all requirement of this Subpart.

(*5*) The requirements of § 1924.13 (e) (1) (ii), (iii), (iv), and (v) are met.

(B) *For public bodies.* In order to comply with the requirements of OMB Circular A–102, an exception to the competitive bidding requirements is not authorized when an FmHA grant to a public body is involved. When an FmHA grant to a public body is not involved, the construction contract should be awarded on the basis of competitive bidding; however, in exceptional cases, and only when justified, the State Director may make an exception to the competitive bidding for a public body applicant provided:

(*1*) Public bodies are permitted by State and local law to negotiate a construction contract.

(*2*) An FmHA grant is not involved.

(*3*) The conditions stated in § 1924.13 (e) (1) (vi) (A) are met.

(C) *For applicant other than nonprofit organizations and public bodies.* When State and local laws permit, an applicant other than a nonprofit organization or public body may

negotiate a construction contract provided the State Director or loan approval official determines and documentation shows that:

(1) The contract price is competitive with other projects similar in construction and design being built in the area.

(2) The proposed contractor is experienced in construction of similiar size, scope, and complexity, and is recognized as a reliable builder.

(3) The development work meets all requirements of this Subpart.

(4) The requirements of § 1924.13(e)(1)(ii), (iii), (iv), and (v) are met.

(2) *Owner-builder method.* This method of development is used only when requested by profit or limited profit RRH applicants when the applicant or any of its controlling principals, (such as stockholders, members, partners other than limited partners, directors, or officers), are general contractors by profession, and will serve as the builder of the project without a written construction contract. The State Director may make an exception to the contract method of construction and authorize proceeding by the owner-builder method of construction in accordance with the provisions of this section if the amount of the loan(s) does not exceed the State Director's approval authority. For projects over the State Director's authority, prior written consent of the National Office is required. In such cases, the drawings, specifications, cost estimates, copy of the State Architect/Engineer's review and detailed information on the applicant's qualifications will be submitted to the National Office along with the State Director's recommendations.

(i) The applicant's request to construct a project by the owner-builder method of construction shall be in the form of a letter giving specific and detailed information concerning the owner-builder's proposal, and the qualifications and past experience of the onwer-builder. The following information must be included with the request:

(A) A résumé indicating the owner-builder's history, ability, and experience.

(B) Dated and signed financial statements (including balance sheets and statements of income and expense) from current and prior years indicating the payment status of the owner-builder's accounts and any contingent liabilities that may exist.

(C) A written, dated, and signed statement agreeing to provide any funds necessary in excess of the applicant's contribution and the loan amount to complete the project.

(D) A credit report (obtained at no expense to FmHA) attesting to the owner-builder's credit standing.

(E) A listing of trade references that could be contacted to substantiate the owner-builder's experience and good standing.

(F) Statements from owners for whom the owner-builder has done similar work, indicating the scope of the work and the owner's evaluation of the owner-builder's performance.

(G) A current, dated, and signed trade-item cost breakdown of the estimated total development cost of the project which has been prepared by the owner-builder. Form FmHA 1924-13, "Estimate and Certification of Actual Cost" will be used for this purpose. If cost certification or cost estimation services are required by FmHA, the cost of such services may be included in the total development cost of the project. Any subcontractor, material supplier, or equipment lessor sharing an identity of interest with the applicant/owner-builder as defined in § 1924.4(h) must also provide a trade item cost breakdown of the proposed amount.

(H) An example of the ledger-type accounting system that the owner-builder and/or the owner-builder's Certified Public Account or Licensed Public Account proposes to set up and use in maintaining a running record of the actual cost of the project. In order to be acceptable, it must allow for a trade item basis comparison of the actual cost as compared to the estimated cost submitted in accordance with § 1924.13(e)(2)(1)(G) above.

(I) A written, dated, and signed statement agreeing to permit FmHA, the Comptroller General of the United States, or any of their duly authorized representatives, to have access to any books, documents, papers, and records which are directly pertinent to the specific Federal program for the purpose of making audit, examination, excerpts, and transcriptions.

(ii) In order to waive the contract method of construction and proceed with the owner-builder method of construction, the State Director must determine that the following conditions exist:

(A) The applicant or at least one of its principals is a fully qualified builder by profession, has adequate experience in constructing the type of units proposed as well as projects of similar size, scope, and complexity, and will be able to complete the work in accordance with the FmHA approved drawings and specifications.

(B) Based upon the information presented in the applicant's financial statements, the applicant is presently able and is likely to continue to be able to provide any funds necessary in excess of the applicant's contribution and the loan amount to complete the project.

(C) The total development cost of the project does not exceed that which is typical for similar type projects in the area. When the State Director determines it advisable, the State Director may require independent cost estimation by a professionally recognized cost estimation firm to help substantiate the total development cost of this project. The total development cost recognized by FmHA for each individual case will be determined by the Multiple Family Housing Coordinator with the advice of the State Architect.

(D) The owner-builder has provided sufficient information on all contracts or subcontracts in excess of $10,000 to permit compliance with § 1924.6(a)(11)(iv).

(iii) The development cost of the project may include a typical builder's fee for overhead (general requirements and builder's overhead) and for builder's profit. A typical builder's fee for these purposes may be determined by local investigation and also from HUD data for the area. The applicant/owner-builder and any subcontractors, material suppliers, and equipment lessors having or sharing an identity of interest with the applicant/owner-builder may not be permitted a builder's fee or other fees for overhead and profit which exceed the amounts shown on their cost breakdown.

(iv) Under no circumstances will loan funds be used to pay the applicant or its stockholders, members, directors, or officers, directly or indirectly, any profits from the construction of the project except a typical builder's fee for performing the services that would normally be performed by a general contractor under the contract method of construction. Discounts and rebates given the owner-builder in advance must be deducted before the invoices are paid. If discounts or rebates are given after the invoices are paid, the funds must be returned to the supervised bank account or applied on the interim construction loan, as appropriate.

(v) The plans and specifications must be specific and complete so that there is a clear understanding as to how the

facility will be constructed and the materials that will be used.

(vi) When architectural services are required by § 1924.13(a) of this Subpart, architectural services during the construction and warranty phases must be provided by an architect who has no identity of interest with the applicant/owner-builder. The services to be rendered during the construction and warranty phases include, but are not limited to inspections, changes in the scope of the project or work to be done, administration of construction accounts, rejection of work and materials not conforming to the FmHA approved drawings and specifications, and other appropriate services listed in § 1924.13(a)(5) (v) and (vi).

(vii) The applicant/owner-builder and any subcontractor, material supplier, or equipment lessor sharing an identity of interest as defined in § 1924.4(h) must provide certification as to the actual cost of the work performed in connection with the construction of the project on Form FmHA 1924–13 prior to final payment. For all such projects involving a total development cost of more than $350,000 and any other project where the State Director determines it appropriate, all construction records must also be audited by an independent CPA or LPA who will provide an unqualified opinion as to the actual cost of construction.

(A) When cost certification is required, the CPA or LPA will audit the books, accounts, and records of the owner-builder (and any subcontractor, material supplier, or equipment lessor sharing an identity of interest with the applicant/owner-builder) concerning the work performed, services rendered, and materials supplied in connection with the construction of the project. Upon completion of construction and prior to final payment, the CPA or LPA will provide an unqualified opinion concerning the actual cost. The CPA or LPA must also certify that the audit has been completed in accordance with generally accepted auditing standards, that to the best of the CPA or LPA's knowledge and belief the actual cost for the construction of the project is accurate and correct as represented, and that the CPA or LPA has no identity of interest and the applicant/owner-builder, architect, engineer, attorney, subcontractors, material suppliers, or equipment lessors. The following format is suggested for this certification and it contains the minimum representations acceptable to FmHA:

We have examined the books and records of (owner-builder) related to the development of the (Project Name and Case Number).

Our examination was made in accordance with generally accepted auditing standards and, accordingly, included such tests of the accounting records and such other auditing procedures as we considered necessary in the circumstances.

In our opinion, the accompanying documentation and Form FmHA 1924–13 present fairly the actual cost, in the amount of $———, of the (Project Name). It conforms with generally accepted accounting principles and gives effect to the instructions issued by the FmHA for the recognition of such costs.

Amounts paid and to be paid are shown as of the close of business ————, 19—.

We certify that we have no financial interest in the owner-builder or the project other than in the practice of our profession.

FmHA reserves the right to determine, upon receipt, whether or not the certified statement of cost is satisfactory to FmHA.

(B) Prior to final payment to anyone required to cost certify, FmHA must be provided with a certification and trade-item breakdown showing the actual cost compared to the estimated cost furnished in accordance with § 1924.13(e)(2)(i)(G). Form FmHA 1924–13 is the form of comparative breakdown that must be used, and contains the certification required of the applicant/owner-builder prior to final payment. Fees for overhead (general requirements and overhead) and profit exceeding the amounts shown on the cost breakdown provided in accordance with § 1924.13(e)(2)(i)(G) may not be paid to any owner-builder or to any contractor, subcontractor, material supplier, or equipment lessor having or sharing an identity of interest with the applicant/owner-builder. Final payment to the owner-builder will be adjusted, if necessary, to assure that the fees shown on the certificate of actual cost do not exceed those shown on the cost breakdown.

(viii) Requests for payment for work performed by the owner-builder method, shall be submitted to the FmHA District Director for review and approval prior to each advance of funds in order to insure that funds are used for authorized purposes. Requests for payment shall be made on Form FmHA 424–18, "Partial Payment Estimate," or other professionally recognized form containing the following certifications to FmHA:

I hereby certify to the Farmers Home Administration that I have carefully inspected the work and as a result of my inspection and to the best of my knowledge and belief, the quantities shown in this estimate are correct and have not been shown in previous estimates and the work has been performed in accordance with the contract documents.

———————————

(Name of Architect)

By: ———————————

———————————

(Title)

Approved by Owner's Representative:

By: ———————————

———————————

(Title)

Accepted by FmHA Representative:

By: ———————————

———————————

(Title)

The Review and Acceptance of Partial Payment Estimates by FmHA does not Attest to the Correctness of the Quantities shown or that the work has been Performed in accordance with the Plans and Specifications.

(A) If interim financing is available at reasonable rates and terms for the construction period, such financing shall be obtained. Exhibit I to Subpart D of Part 1822 of this chapter (FmHA Instruction 444.5) shall be used to inform the interim lender that FmHA will not close its loan until the project is substantially complete, ready for occupancy, and evidence is furnished indicating that all bills have been paid for work completed on the project. Upon presentation of proper partial payment estimates containing an estimate of the value of work in place which has been prepared and executed by the owner-builder, certified by the applicant's architect, and accepted by FmHA, the interim lender may advance construction funds in accordance with the provisions of this Section in an amount up to, but not exceeding 90 percent of the value of work in place and material suitably stored on site.

(B) If interim financing is not available, partial payments not to exceed 90 percent of the value of work in place and material suitably stored on site may be made to the owner-builder if the total estimated costs of the improvements and structures are guaranteed by a letter of credit or deposits meeting the requirements of § 1924.6(a)(3)(iii) (A) or (B). Partial payments may not exceed 60 percent of the value of work in place in all other cases. The determination of the value of work in place will be based upon an application for payment containing an estimate of the value of work in place which has been prepared and executed by the owner-builder, certified by the borrower's architect, and accepted by FmHA. Prior to receiving the first partial payment, the owner-builder must submit a schedule of prices or values of the various trades or phases of the work aggregating the total development cost of the project as required in § 1924.13(e)(2)(i) (G) and (H). Each

application for payment must be based upon this schedule, and show the total amount owed and paid to date for materials and labor procured in connection with the project. With each application for payment, the owner-builder must also submit evidence showing how the requested partial payment is to be applied, evidence showing that previous partial payments were properly applied, and a signed statement from the applicant's attorney, title insurance company, or local official in charge of recording documents certifying that the public records have been searched and that there are no liens of record. When the District Director has reason to believe that partial payments may not be applied properly, checks will be made payable to persons who furnish materials and labor for eligible purposes in connection with the project.

(ix) Under no circumstances shall funds be released for final payment or to pay any items of the builder's fee until the project is 100 percent complete, ready for occupancy, and the owner-builder has completed and properly executed Form FmHA 1924-13 "Estimate and Certification of Actual Cost", or complied with the cost certification procedures of § 1924.13(e)(2)(vii).

§§ 1924.14-1924.50 [Reserved]

Exhibit A—Breakdown of Dwelling Cost for Estimating Partial Payments

	With basement (percent)	Without basement (percent)
1. Excavation	2	(*)
2. Footing & foundations, walk, columns.	7	4
3. Floor joist	2	2
4. Subfloor	1	2
5. Wall Framing (thru top plates)	7	7
6. Wall sheathing	4	4
7. Roof framing, ceiling joist, sheathing & felt	8	9
8. Roofing	3	3
9. Felt, siding, exterior trim, porches, etc.	6	6
10. Siding, primed	1	1
11. Windows and exterior doors	8	9
12. Plumbing—roughed in	4	5
13. Sewage Disposal	2	2
14. Heating—roughed in	1	1
15. Electric—roughed in	2	2
16. Insulation, walls & ceiling	1	1
17. Dry wall or plaster	6	7
18. Basement & porch floors—steps	2	1
19. Heating—finished	5	5
20. Flooring, including kitchen & bath	4	4
21. Interior carpentry, trim & doors	5	5
22. Cabinets & counter tops	4	4
23. Interior decoration	4	4
24. Exterior paint	2	2
25. Plumbing-complete fixtures, sink & water heater	4	5
26. Electric—complete fixtures	1	1
27. Finish hardware	1	1
28. Gutters & downspouts	1	1
29. Sanding & finishing floors	1	1
30. Grading, walks & landscaping	1	1
	100	100

*Include with footings and foundations.

Exhibit B—Manufactured Housing Guidelines

This Exhibit sets forth general guidelines for establishing a coordinated and uniform evaluation, acceptance, inspection, and certification system for manufactured housing (also known as industrialized housing) proposed for use in Farmers Home Administration (FmHA) rural housing programs. It pertains to the proposed building product package to be provided either under contract between an FmHA borrower and a single contractor for the completed job ready for occupancy or under the conditional commitment program. In either case, the package shall also include all onsite work. The guidelines are also to provide a more clear understanding of the use of background information available through the Department of Housing and Urban Development (HUD) for analysis of manufactured housing proposals.

I Applicable Standards and Manuals

A. The FmHA basis for portions of the review is the HUD Manual 4950.1, "Technical Suitability of Products Program." For manufactured housing, there are two categories indicated in the Manual, Category I and Category II, which require HUD review and analysis of the proposed structure and inspection of the manufacturing plant.

B. The review and inspection of the plant must be done before HUD can determine if it has authority to issue an addendum to the Minimum Property Standards (MPS) in the form of a Structural Engineering Bulletin (SEB). Engineering Bulletins are prefixed SEB, TCB (Truss Connector Bulletin) or MEB (Mechanical Engineering Bulletin). The HUD field offices may also issue acceptance letters designated as RLA (Regional Letter of Acceptance) and LLA (Local Letter of Acceptance).

C. All FmHA offices should maintain a close working relationship with each HUD office in the jurisdictional area of the FmHA State Director. This should be done to assure coordination of Government requirements for acceptance of manufactured housing.

II FmHA Categories

There are two categories for manufactured housing proposals made to FmHA after acceptance by HUD.

A. Category A is manufactured housing that will only be marketed in one FmHA State Director's jurisdictional area. In this case, the review for compliance with the MPS and local FmHA requirements will be made by the State Office architect/engineer (a/e).

B. Category B includes any manufactured housing that will be marketed in more than one State Director's jurisdictional area. In this case, the review will be made initially by the State Office a/e in whose jurisdictional area the manufacturing plant is located. As soon as the review has been written, a complete set of the submission documents including any additional comments believed necessary will be sent to the National Office Environmental and Technology Staff (ETS) for final review and distribution to all State Directors in the manufacturer's market area.

C. A list of information and drawings required for the manufacturer to submit to FmHA for review is provided in Attachment 1 to this Exhibit.

III State Office Review and Actions Under Category A

A. The State Office a/e will determine compliance with the MPS and local FmHA requirements for housing to be modest in size, design, and cost and any other local FmHA requirements in effect through the use of paragraph 101-4 of the MPS with concurrence of the National Office.

B. The State Office a/e should work closely with the manufacturer to assist with MPS interpretations in order to provide housing that will be in compliance with the MPS and any other local requirements.

C. The State Director shall formulate an appropriate attachment to the State Supplement to FmHA Instruction 1924-A in order to list or register acceptable manufactured models proposed to be marketed only in the State Director's jurisdictional area. Each list and any revisions or additions will be issued to each County and District Office for reference purposes. This list is to include a least the information shown in the following example:

Example

[State Instruction 1924-A Exhibit ——]

Local Acceptable Manufactured Housing for FmHA Loan Consideration

Only in the State(s) of ——————

The list includes only manufacturer's models whose plant is located in this (these) State(s) and whose market is intended only for this area.

Manufacturer's name and address	HUD review	Model designation and structural description	Drwgs and specs dates
RHSH Mfg. Co., Motown, PA 1776590		The Lollipop 24x40 3 BR 1B Sec w/bsmnt	d=8/28/77 s=8/31/77 rvsd 3/15/77
Technological Hsg. Inc., Anywhere, PA 107101		The Holiday 24/42 3 BR 1B Sec c/s	d/s 6/20/76 rvsd 2/26/78
		The Pioneer 23—4x46 3 BR 1 B SEC Country Kitchen.	d/s 1/10/77 rvsd 3/10/78
Minimum Hsg., Inc., Countyseat, PA 107102		The Hacienda 24x36 3 BR 1B	d/s 2/16/76
Townhouses, Inc., Middleland, PA 107103	LLA	The Anthill, MH 12x36 2s/b	d 6/12/76 s 7/15/77 rvsd 3/6/78

Abbr. Used LLA—Local Letter of Acceptance from HUD, rsvd=revised; SEC—Sectional; MOD—Modular; o/p—Open Panel; c/p—Closed Panel; C/S—crawl space; BSMNT—basement; MH—Multihousing; Twnhs—Townhouse; Row—Rowhouse; 2S—2 Story; 2s/b—2 Story with Bsmnt; D—Den.

NOTE.—Each sheet of this list should be dated and each revised sheet shall be marked "rvsd" with new date.

D. Housing loan applications or conditional commitment applications involving manufactured housing will include all the information required in Exhibit C to FmHA Instruction 1924–A, "List of Required Drawings and specifications". The site and plot plans required and any adjustments necessary to the drawings due to individual site conditions including foundation and elevation drawings indicating topography shall be completed and provided by the local builder-dealer representing the manufacturer of the house. The drawings provided by the local builder-dealer shall also include landscaping structures such as: stoops, porches, steps, sidewalks, driveways, and drainage structures.

E. All other actions will be according to FmHA Instruction 1924–A. However, in the case of borrower complaints that may be attributable to manufacturing, the State Director should be notified quickly so that the manufacturer can be brought into the discussion. This is to help the manufacturer reduce chances of housing on the construction line from having the same problems built into them.

F. When the FmHA State Office receives proposals from a manufacturer whose plant location is within the State Director's jurisdictional area but the market area is multistate, the State Office a/e will preform an analysis as if it were for only one State. Upon completion of the written analysis, the complete set of proposal documents will be sent to the National Office ETS for final review for coordination in all States in the market area.

IV National Office Review and Actions Under Category B

A. The FmHA National Office ETS will review all manufactured housing proposals with a potential market area that will be in more than one State Director's jurisdictional area.

1 The National Office ETS review will include coordination of the proposal with other State Director's jurisdictional areas that are in the manufacturer's market area. This coordination will be necessary to assist the manufacturer with possible adjustments in the proposed housing to meet local requirements that have been incorporated into the MPS by a State Director using paragraph 101–4 of the MPS and the issuance of a State Office locally acceptable standard that has National Office concurrence.

2 When the proposed housing is found to be acceptable for loan consideration in all the manufacturer's market area, the FmHA Administrator will issue a "Register of Acceptable Manufactured Housing for FmHA Loan Consideration" only in the States listed under the title. The National Office register will follow the same format as the State Director's illustrated in the example in paragraph III C of this Exhibit. The National Office will inform the State Offices affected and request that the manufacturer provide only approved sets of drawings and specifications to their builder-dealers.

3 When the proposed housing is found not to be acceptable for FmHA loan consideration, the National Office ETS will work with the manufacturer by providing the company with a check list of major areas of non-conformity with the MPS. The manufacturer will be expected to make the necessary adjustments to the proposal before any additional proposals are submitted for final review.

4 If a proposal is received that is not on either the State Acceptance List or on the National Acceptance register maintained FmHA in a local County or District Office, the County Supervisor or District Director will send all of the required information to the State Office a/e. The County Supervisor or District Director may add any comments on the proposal including a discussion of known experiences with the manufacturer or the local builder-dealer representing the manufacturer.

V Inspections and Reports

Note.—Initial plant or factory inspections are to be made by the local HUD office in whose jurisdictional area the plant is located. Before a house manufactured off-site is acceptable to FmHA, it must be acceptable to HUD. The same HUD office is required to make periodic factory inspections as long as the SEB, RLA or LLA is in effect.

A. The FmHA State Office a/e in whose area a manufacturing plant is located which has HUD acceptance and appears to have FmHA acceptance, should make supplemental factory inspections when it is convenient and/or when it is evident that the manufacturer is not complying with the MPS or the company's certification required by HUD acceptance is no longer valid. Form FmHA 424–24 (HUD Form 2051–M), "Manufactured Housing-Factory Inspection Report," will be used to report the visit to the plant and comments on the housing being manufactured. Copies of the report will be provided the manufacturer, the State Office file on the company and when any unresolved noncompliances are uncovered, a copy each should be provided the local HUD office and the National Office FmHA Environmental and Technology Staff (ETS).

B. Section 1924.9 of this subpart outlines the required inspections to be made and reported by FmHA personnel in whose jurisdiction the house is permanently located. The FmHA inspector may make additional inspections when a manufacturer's product is being financed the first time or when it is the first experience with a builder-dealer. The visits are to better familiarize the inspector with the house and builder. When any noncompliance that is attributable to the manufacturer is found and reported on Form FmHA 424–12, "Inspection Report," a copy of that report and any additional comments should be provided the State Director for any action necessary. When the State Director receives a noncompliance report on the manufacturing process, the manufacturer should be contacted and a verbal report made to assist the manufacturing company in making any necessary changes in the housing on the construction line at the time of the report. This should be confirmed in writing and a copy sent to the National Office ETS with any other comments to explain the situation in detail.

VI Unacceptable Housing Performance

A. All manufactured housing must comply with the HUD requirements (SEB, RLA, LLA), FmHA requirements, the accepted drawings and specifications, and the MPS. The manufacturer with HUD, VA, and FmHA acceptance is required to furnish the builder-dealer with a written certification stating that the product has been manufactured in compliance with the MPS except as modified by an SEB, RLA, or LLA. The builder-dealer also shall endorse the manufacturer's certification and add a statement that the product has been erected and the site is in compliance with the MPS and that this statement in no way relieves the builder-dealer of any responsibility under the terms of the Builders Limited Warranty. These certifications shall be furnished to the FmHA County Office upon completion of the job.

If the FmHA inspector finds any of the following circumstances, the inspector may refuse to accept the construction until corrections have been made:

1. Evidence of noncompliance with any portion of the method described in the SEB, RLA, or LLA.

2 Faulty shop fabrication including surface defects.

3 Damage to shop fabricated items or materials due to transportation, improper storage, handling, or assembly operation.

4 Unsatisfactory field or site workmanship.

FmHA will make periodic surveys of houses constructed under this system to collect performance data for continuing evaluation of the product in support of acceptance.

If, in the judgement of FmHA, the product has failed to perform in a satisfactory manner, acceptance may be withdrawn until corrections have been made in housing models being constructed by the manufacturer or erected by the builder-dealer.

Negotiations for corrections will be discussed between the manufacturer and/or the builder-dealer and the State Director in whose jurisdiction the plant is located or in whose area the houses are being erected by the builder-dealer. When satisfactory corrections have been established, reinstatement of acceptance may be provided. If a difficult situation arises, the State Director involved may request the assistance of the National Office.

Attachment 1—List of Submission Exhibits for Manufactured Housing

The manufacturer or sponsor of manufactured housing wishing to participate in the Farmers Home Administration (FmHA) Rural Housing programs shall submit to the FmHA State Director having jurisdiction over the State in which the proposed housing is to be manufactured, two copies each of the information listed in this Exhibit for an acceptance review. Experience has shown that submissions not including all the information required, results in delays with the reviews necessary for determination of acceptance.

A. Statements

1 Name and location of organization including principal officers.

2 A brief description of plant facilities.

3 Extent of intended market distribution.

4 The method of quality control during field erection.

5 A copy of the applicable HUD Structural Engineering Bulletin (SEB), Regional Letter of Acceptance (RLA), or Local Letter of Acceptance (LLA).

6 Any other pertinent information such as name and address of third party inspection agency and an erection manual if available for field use.

7 Location of nearest assembled product for observation and inspection.

8 Specifications or descriptions of materials using either Form FmHA 424-2, "Description of Materials," or HUD-FHA Form 2005 including sizes, species and grade of all building and finishing materials. All blanks should be filed and additional sheets may be attached as well as equipment manufacturer's brochures. Use an asterisk (*) to denote all items of onsite construction that will be provided by the builder-dealer. The builder-dealer must complete a form for the builder-dealer's portion of the work. Use N/A in all blanks where an item is not applicable.

9 Provide names and addresses of other public and private agencies which have rendered or been asked to render a technical suitability or acceptance determination with respect to the products or structural methods employed.

10 Provide index of all documents submitted.

B. *Working Drawings.* For emphasis as to the details required for manufactured housing proposals, the following items are listed in addition to and in more detail than the requirements in Exhibit A of this Subpart.

1 Foundation and/or Basement Plan: This plan shall include anchorage details, exterior and interior dimensions, typical footings, wall thickness, pilaster sizes and locations, columns or pier sizes and locations and girders required to support the structure. Show location of all euipment (furnace, water heater, laundry tubs, sump, etc.) floor drains, electrical outlets, electrical entrance panels, and all doors and windows or crawl space vents with all sizes indicated.

2 Floor Plans of all levels. Show square footage of each habitable room with square footage of each area of natural light and ventilation. In addition, a design sketch scaled properly to illustrate a typical furniture arrangement for all habitable levels is required to indicate intended occupancy functions of the design. A window and door schedule should also be provided indicating glazed size, sash size, and thermal conductance of each type.

3 All exterior elevations including openings and sizes; wall finish materials, flashing, finish grades intended, depth of footings when known, finish floor, ceiling heights, roof slope, location of downspouts, gutters, vents for both structural spaces and for equipment. Indicate construction joint locations and details of connections between sections, modules or components.

4 Building cross sections showing sizes and spaces of all framing members of lowest member (bottom of footing) to highest point of roof (ridge) plus:

a Type of material and method of application of all covering materials, such as, subflooring, combination subflooring and underlayment, sheathing and interior and exterior finishes.

b Complete details including computations of trussed rafter systems with the architect/engineer's stamp of those responsible for the design.

c Details of insulation and vapor barrier installation and attic ventilation. If the thermal insulation to be provided is determined according to the optional method allowed in Exhibit D, of this Subpart, the submission and complete engineering calculations with all details of construction shall be sent to Administrator, FmHA, Washington, DC 20250, for analysis as prescribed in paragraph IV B of Exhibit D of this Subpart.

d Special details as necessary to show any special features of construction including method of fabricating, erection, joining, and finishing of all elements.

e Details and sections of stairways including all critical dimensions, such as, rise, run, and headroom.

5 Interior elevations of kitchen cabinets and bathroom elevations with schedule of all shelf, counter top and drawer footage. A statement as to how kitchen cabinets are to be provided: As custom made for each model or made for any model by a cabinet manufacturing company with compliance with ANSI A 161.1 as required by paragraph 611-1.1 in the MPS.

6 Plumbing schematics including pipe materials, sizes and plumbing code compliance.

7 Heating plan including heat loss of each room and, if applicable, heat gain. For forced air systems, include supply and return duct layout and location of appropriate diffusers.

8 Electrical plan including circuit diagram.

9 Any other pertinent facts that will better explain why and how certain unusual materials or structural methods are employed.

Exhibit C—List of Required Drawings and Specifications

This list applies to all new buildings to be constructed, including all single family housing and related facilities and as applicable to farm housing and farm service buildings.

I. General: The documents recommended in this Exhibit correspond with the list of Exhibits required in Chapter 3 of the Department of Housing and Urban Development (HUD) "Handbook for Building Single-Family Dwellings" No. 4145.2. However, this listing shall be used as a guide for drawings and specifications to be submitted in support of all types of housing loan and/or grant applications or any type of application involving the construction of buildings. This Exhibit may be used as a public handout. A copy of the drawings and specifications shall be provided by the applicant for a loan or conditional commitment which involves construction of major new buildings or extensive rehabilitation or alterations or additions to existing buildings. Drawings and specifications, for minor alterations or repairs, need pertain only to work to be done, and may be in narrative form when accepted by the County Supervisors. Adequate and accurate Drawings and Specifications are necessary:

A. To determine compliance with the applicable standards and codes,

B. To prepare a cost estimate,

C. To determine the acceptability of the phyical improvements, and

D. To provide a basis for inspections and the builder's warranty.

II Drawings for Individual Applications: Drawings for single family individual housing shall be submitted by the applicant and provide at least the following:

A. *Plot Plan* (at scale, 1"=20' or 1/16'=1'0"-minimum):

1 Lot and block number.

2 Dimensions of plot and north point.

3 Dimensions of front, rear, and side yard.

4 Location and dimensions of garage, carport, and other accessory buildings.

5 Location and sizes of walks, driveways, and approaches.

6 Location and sizes of steps, terraces, porches, fences, and retaining walls.

7 Location and dimensions of easements and established setback requirements, if any.

8 Elevations at the following points: (a) First floor of dwelling and floor of garage, carport and other accessory building; (b) finish curb or crown of street at points of extension of lot lines; (c) finish grade elevation at each principal corner of structure; (d) finish grade at bottom of drainage swales at extension of each side of structure as feasible.

9 The following additional elevations, as applicable, and shall be submitted if the topography or the design of the structure is such that special grading, drainage or foundations may be necessary. Examples are irregular or steeply sloping sites, filled areas on sites, or multilevel structure designs; (a) finish and existing grade elevations at each corner plot; (b) existing grade at each principal corner of dwelling; (c) finish grade at both sides of abrupt changes of grade such as retaining walls, slopes, etc.; (d) other elevations that may be necessary to show grading and drainage.

10 Indication of lot grading type and approximate location of drainage swales.

11 Example Plot No. 1 attached.

12 Where an individual water supply and/or sewage system is proposed, submit drawings and specifications prescribed in Section 5 of this Exhibit and written opinion of Health Authority having jurisdiction and opinion, if available, of local USDA-Soil Conservation Service Official.

B. *Floor Plans.*

1 Scale, ¼" = 1'0".

2 Floor plan of each floor and basement, if any. Recommend typical furniture locations shown to suggest intended use of each habitable space.

3 Plan of all attached terraces and porches, and of garages or carport.

4 If dwelling is of crawl space type, provide separate foundation plan. Slab-type foundation may be shown on sections.

5 Direction, size and spacing of all floor and ceiling framing members, girders, columns or piers.

6 Location of all partitions and indication of door sizes, and direction of door swing.

7 Location and size of all permanently installed construction and equipment such as kitchen cabinets, closets, storage shelving, plumbing fixtures, water heaters, etc. Details of kitchen cabinets may be on separate drawing.

8 Location and symbols of all electrical equipment, including switches, outlets, fixtures, etc.

9 Heating system on separate drawing, or when it may be shown clearly it may be part of the floor or basement plan showing: (a) Layout of system; (b) location and size of ducts, piping, registers, radiators, etc.; (c) location of heating unit and room thermostat; (d) total calculated heat loss of dwelling including heat loss through all vertical surfaces, ceiling and floor. When a duct or piped distribution system is used, calculated heat loss of each heated space is required.

10 Cooling system, on separate drawings or, as part of heating plan, floor or basement plan showing: (a) Layout of system; (b) location and size of ducts, registers, compressors, coils, etc.; (c) heat gain calculations, including estimated heat gain for each space conditioned; (d) model number and Btu capacity of equipment or units in accordance with applicable Air Conditioning and Refrigeration Institute (ARI) or American Society of Refrigerating Engineers (ASRE) Standard; (e) Btu capacity and total Kilowatt (KW) input at stated local design conditions; (f) if room or zone conditioners are used, provide location, size and installation details.

C. *Exterior Elevations.*

1 Scale, ¼" = 1'0". Elevations, other than main elevation, which contain no special details may be drawn at ⅛" = 1'0".

2 Front, rear and both side elevations, and elevations of any interior courts.

3 Windows and doors—indicate size unless separately scheduled or shown on floor plan.

4 Wall finish materials where more than one type is used.

5 Depth of wall footings, foundations, or piers, if stepped or at more than one level.

6 Finish floor lines.

7 Finish grade lines at buildings.

D. *Details and Sections.*

1 Section through exterior wall showing all details of construction from footings to highest point of road. Where more than one type of wall material is used, show each type. Scale, ⅜" = 1'0" minimum.

2 Section through any portion of dwelling where rooms are situated at various levels or where finished attic is proposed, Scale, ¼" = 1'0" minimum.

3 Section through stair wells, landings, and stairs, including headroom clearances and surrounding framing. Scale, ¼" = 1'0" minimum.

4 Details of roof trusses if proposed, including connections and stress or test data with seal of architect or engineer responsible. Scale of connections, ⅜"=1'0" minimum.

5 Elevation and section through fireplace. Scale ⅜"=1'0" minimum.

6 Elevations and section through kitchen cabinets, indicating shelving. Scale, ¼"=1'0" minimum.

7 Sections and details of all critical construction points, fastening systems, anchorage methods, special structural items or special millwork. Scale as necessary to provide information, ⅜"=1'0" minimum.

III Drawings for Group Applications

Drawings for group applications (conditional commitments) may be submitted in lieu of drawings for each individual property when a number of applications are simultaneously submitted involving repetition of a basic type dwelling.

A. *Master Plot Plan* shall include the following:

1 Scale which will provide the following information in a clear and legible manner.

2 North point.

3 Location and width of streets and rights-of-way.

4 Location and dimensions of all easements.

5 Dimensions of each lot.

6 Location of each dwelling on lot with basic dimensions.

7 Dimensions of front, rear, and side yard.

8 Location and dimensions of garages, carports, or other accessory buildings.

9 Identification of each lot by number and indication of basic plan and elevation type.

10 Location of walks, driveways, and other permanent improvements.

B. *Typical Plot Plan* for each basic type dwelling may be submitted in lieu of fully detailing each lot on Master Plot Plan, when topography and lot arrangements present no individual planning or construction problems.

1 Information not shown on Typical Plot Plan shall be included on Master Plot Plan.

2 Typical Plot Plans shall not be used for corner lots, lots with irregular boundaries, lots involving pronounced topographic variations or other lots where individual detailing is necessary.

3 Show location of dwelling on typical lot and full dimensions.

4 Provide location and dimensions of all typical improvements, such as garages, carports, accessory buildings, walks, drives, steps, porches, terraces, trees, shrubs, retaining walls, fences, etc.

C. *Grading* may be shown on separate grading plan or on the Master Plot Plan. Scale shall be sufficiently large to provide the following information in clear and legible manner:

1 Contours of existing grade at intervals of not more than 5 feet. Intervals less than 5 feet may be required when indicated by the character of the topography.

2 Location of house and accessory buildings on each lot.

3 Identification of each lot by number.

4 Elevations in accordance with individual plot plan including bench mark and datum or, in lieu of finish grade elevations, contours of proposed finish grading may be submitted. Contour intervals selected shall be appropriate to the topography of the site.

5 Lot grading shall be shown by indicating protective slopes and approximate location of drainage swales.

6 Location of drainage outfall if any drainage is not to a street.

D. *Floor Plans, Elevations, Sections, and Details* shall be submitted for each basic plan. Alternate elevations to basic plan may be shown at scale, ⅛"=1'0".

IV Specifications

Form FmHA 424-2, "Description of Materials," or other acceptable and comparable descriptions of all materials forms shall be submitted with the drawings by the applicant. The forms shall be completed fully in accordance with the instructions on Form FmHA 424-2 to describe the materials to be used in the construction.

A. Submit the drawings along with each application.

B. Form FmHA 424-2 may be reproduced provided size, format and printed text are identical to current official form. When current official form is reproduced, the following deletions must be made:

1 All lines indicating FmHA form numbers or other Government agency initials and numbers, and

2 The United States Government Printing Office (GPO) imprint and reference number.

C. The material identification information shall be in sufficient detail to fully describe the material, size, grade and where applicable, manufacturers model or identification numbers. Where necessary, additional sheets must be attached as well as manufacturers specification sheets for equipment and/or special materials, such as aluminum siding and carpeting.

V Individual Water Supply and Sewage Disposal Systems

When an individual water and/or sewage disposal system is proposed the following additional information must be submitted:

A. *Approval and recommendations of various authorities.*

1 A written opinion by the health authority having jurisdiction that the site is suitable and acceptable for the proposed system(s) and

2 If available, a soils report from the local USDA-Soil Conservation Service Office and any recommendations they may have.

3 Approval of appropriate environmental control authority.

4 A signature of the health authority on the plot plan indicating approval of design of the proposed system.

B. *Plot Plan.*

1 Location and size of septic tank, distribution box, absorption field or bed, seepage pits and other essential parts of the sewage disposal system and distance to all individual wells and open streams or drainageways.

2 Location of well, service line and other essential parts of the water supply system and distance to other wells and/or sewage disposal systems.

3 Exact location of individual systems (water or sewage) on adjacent properties and description of system if available.

4 Example Plot Plan No. 2 attached.

C. Construction details of all component parts of individual water supply and sewage disposal system shall clearly indicate material, equipment and construction. Extra sheets and drawings should be added as necessary to fully explain the proposed installation.

Attachment 1: Example Plot Plan No. 1

Attachment 2: Example Plot Plan No. 2

BILLING CODE 3410-07-M

Exhibit C
Attachment 1

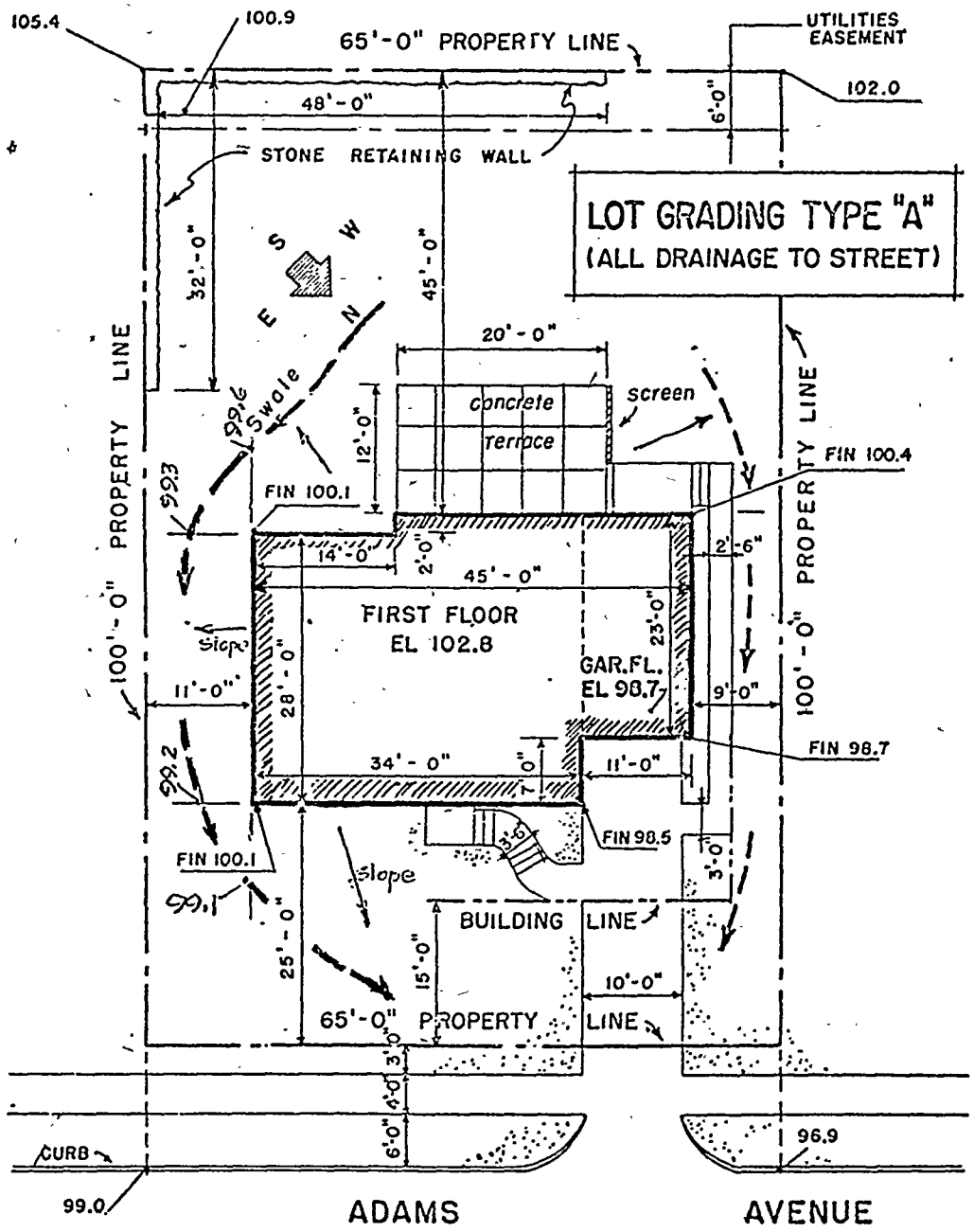

Lot 4 Block 7
CHESTNUT HILL - BRAINARD, COLUMBIA

Scale 1/16" = 1'-0"

EXAMPLE PLOT PLAN No 1

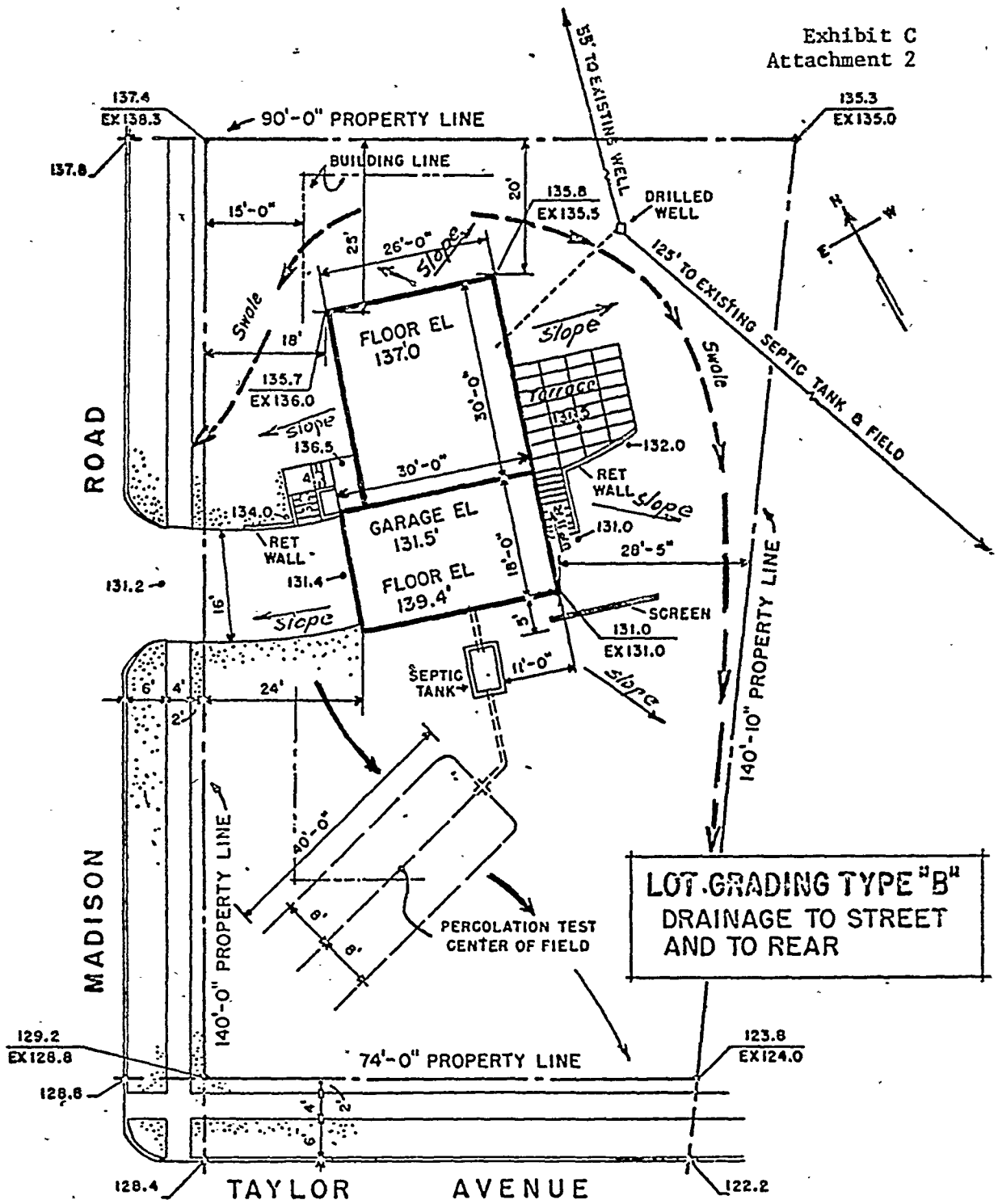

LOT 29. BLK. 2 HEALTH AUTHORITY
HOMESTEAD ADDITION, LINCOLN COUNTY, COLUMBIA

EXAMPLE PLOT PLAN NO. 2 *Scale 1" = 20'*

BILLING CODE 3410-07-C

Exhibit D—Thermal Performance Construction Standards

I Purpose

This Exhibit prescribes construction standards to be used in all housing loan and grant programs. These requirements shall supersede those listed in the Minimum Property Standards (MPS) No. 4900.1, "One and Two Family Dwellings," and 4910.1, "Multifamily Housing", as applicable.

II Policy

All loan or grant applications involving new construction and all applications for conditional commitments shall have drawings and specifications prepared to comply with paragraphs IV A or IV C and D of this Exhibit. All existing dwellings to be bought with FmHA loan funds shall be considered in accordance with paragraphs IV B or C of this Exhibit.

III Definitions

A. *British thermal units (Btu)* means 1 (International Table) (IT) calorie per kilogram per degree Celsius is equal to 1 Btu per pound of water per degree Fahrenheit. It is approximately the heat required to raise the temperature of one pound of water from 59 degrees Fahrenheit to 60 degrees Fahrenheit.

B. *A degree day* is a unit based on temperature difference and time. For any one day, when the mean temperature is less than 18.3 degrees Celsius (65 degrees Fahrenheit), there are as many degree days as degree Celsius (degree Fahrenheit) difference in temperature between the mean temperature for the day and 18.3 degrees Celsius (65 degrees Fahrenheit).

C. *Glazing* is the material set into a sash or door when used as a natural light source and/or for occupant's views of the outdoors.

D. *"R" value,* thermal resistance, is a unit of measure of the ability to resist heat flow. The higher the R value, the higher the insulating ability.

E. *"U" value* is the overall coefficient of heat transmission and is the combined thermal value of all the materials in a building section. U is the reciprocal of R. Thus U = 1/R or R = 1/U or 1C where C is the thermal conductance and is the unit of measure of the rate of heat flow for the actual thickness of a material one square foot in area at a temperature of one degree Fahrenheit. The lower the U value, the higher the insulating ability.

IV. Minimum Requirements

A. All dwellings, single family or multifamily, to be constructed with FmHA loan and/or grant funds shall comply with the following:

New Construction—Maximum U Values for Ceiling, Wall and Floor Section of Various Construction

Winter degree days (Note 1)	Ceilings (Note 2)	Walls	Floors (Note 3)	Glazing (Note 4)	Doors (Note 5)
1,000 or less	0.05	0.08	0.08	1.13	
1,001 to 2,500	.04	.07	.07	.69	
2,501 to 4,500	.03	.05	.05	.69	Storm door if hollow core door or if over 25 percent glass.
4,501 to 6,000	.03	.05	.05	.47	Storm door.
6,001 or more	.026	.05	.05	.47	Storm door.

(U values are not adjusted for framing. Values calculated for components may be rounded. For example, a total R Value of 18.88 converts to a U value of .0529 rounded to .05)

NOTE 1.—Winter degree days may be obtained from the ASHRAE Guide; the "NAHB Insulation Manual for Homes and Apartments"; local utilities; and the National Climatic Center, Federal Building, Asheville, N.C.
Manuals are available from NAHB RF, Rockville, MD 20850, or NMWIA, 382 Springfield Avenue, Summit, NJ 07901.
Other sources of degree day data may be used if available from a recognized authority.

NOTE 2.—In pitched roof construction, compression of insulation at the outside building walls is permitted to allow for a 1 inch ventilation space under the roof sheathing. For any loose fill insulation, a baffle must be provided. Raised trusses are not required.

Note 3.—For floors of heated spaces over unheated basements, unheated garages or unheated crawl spaces the U value of floor section shall not exceed the value shown.

A basement, crawl space, or garage shall be considered unheated unless it is provided with a positive heat supply to maintain a minimum temperature of 50 F. Positive heat supply is defined by ASHRAE as "heat supplied to a space by design or by heat losses occurring from energy-consuming systems or components associated with that space."

Where the walls of an unheated basement or crawl space are insulated in lieu of floor insulation, the total heat loss attributed to the floor from the heated area shall not exceed the heat loss calculated for floors with required insulation.

Insulation may be omitted from floors over heated basement areas or heated crawl spaces if foundation walls are insulated. The U value of foundation wall sections shall not exceed the value shown. This requirement shall include all foundation wall area, including header joist (band joist), to a point 50 percent of the distance from a finish grade to the basement floor level. Equivalent Uo configurations are acceptable.

Maximum U Values of the Foundation Wall Sections of Heated Basement Not Containing Habitable Living Area or Heated Crawl Space

Winter degree days (65 F base)	Maximum U Value	Glazing*
2500 or less	No requirement	1.13
2501 to 4500	0.17	1.13
4501 or more	0.10	0.69

*Glazing in heated basement shall be limited to 5 percent of floor area unless alternative Uo combination is documented.

Note 4.—Sliding glass doors are considered as glazing. The glazing value is for glass only. Glazing shall be limited to 15 percent of the gross area of all exterior walls enclosing heated spaces in accordance with Table 6-7.1 in the MPS 4900.1.

Note 5.—1¾ inch metal faced door systems with rigid insulation core and durable weatherstripping providing a "U" value equivalent to a wood door with storm door and an infiltration rate no greater than .50 cfm per foot of crack length tested according to ASTM E-283 at 1.567 psf of air pressure, may be substituted for a conventional door and storm door. All doors shall be weatherstripped. Any glazed areas must be double-glazed.

Minimum R Values of Perimeter Insulation for Slabs-on-Grade

Winter degree days (65 F base)	Minimum R values*	
	Heated slab	Unheated slab
500 or less	2.8	—
1000	3.5	—
2000	4.0	2.5
3000	4.8	2.8
4000	5.5	3.5
5000	6.3	4.2
6000	7.0	4.8
7000	7.8	5.5
8000	8.5	6.2
9000	9.2	6.9
10000 or greater	10.0	7.5

*For increments between degree days shown, R values may be interpolated.

B All existing dwellings to be purchased with RH loan and grant funds shall be insulated in accordance with the following:

Existing Construction—Maximum U Values for Ceiling, Wall and Floor Section of Various Construction

Winter degree days (Note 1)	Ceilings	Walls (Note 2)	Floors (Note 3)	Glazing	Doors (Note 5)
1,000 or less	0.05		0.08	1.13	
1,001 to 2,500	.04		.07	.69	
2,501 to 4,500	.03		.05	.69	Storm door if hollow core door or if over 25 pct glass.
4,501 to 6,000	.03		.05	.69	Storm door.
6,001 to 7,000	.026		.05	.69	Storm door.
7,001 or more	.026		.05	.69	Storm door.

U values are not adjusted for framing. Values calculated for components may be rounded. For example, a wall section with a total R value of 18.88 converts to a U value of .0529 rounded to .05.

NOTE 1.—Winter degree days may be obtained from the ASHRAE Guide; the "NAHB Insulation Manual for Homes Apartments"; local utilities; and the National Climatic Center, Federal Building, Asheville, NC.

Manuals are available from NAHB RF, Rockville, MD 20850, or NMWIA, 382 Springfield Avenue, Summit, NJ 07901.

Other sources of degree day data may be used if available from a recognized authority.

Note 2.—Walls shall be insulated as near to new construction standards as economically feasible. Any exterior wall framing exposed during repair or rehabilitation work shall have vapor barrier installed and be fully insulated.

Note 3.—For floors of heated spaces over unheated basements, unheated garages or unheated crawl spaces the U value of floor section shall be exceed the value shown.

A basement, crawl space or garage shall be considered unheated unless it is provided with a positive heat supply to maintain a minimum temperature of 50 F. Positive heat supply is defined by ASHRAE as "heat supplied to a space by design or by heat losses occurring from energy-consuming systems or components associated with that space."

Where the walls of an unheated basement or crawl space are insulated in lieu of floor insulation, the total heat loss attributed to the floor from the heated area shall not exceed the heat loss calculated for floors with required insulation.

Insulation may be omitted from floors over heated basement areas or heated crawl spaces if foundation walls are insulated. The U value of foundation wall sections shall not exceed the value shown. This requirement shall include all foundation wall area, including header joist (band joist), to a point 50 percent of the distance from a finish grade to the basement floor level. Equivalent Uo configuration are acceptable.

Maximum U Values of the Foundation Wall Sections of Heated Basement Not Containing Habitable Living Area or Heated Crawl Space

Winter Degree Days (65 F Base)	Maximum U Value	Glazing*
2,500 or less	No requirement.	1.13
2,501 to 4,500	0.17	1.13
4,501 or more	0.10	0.69

*Glazing in heated basement shall be limited to 5 percent of floor area unless alternative Uo combination is documented.

Note 4.—Slab edge insulation should be provided wherever practical in areas of 2,500 or more winter degree days. Rigid insulation placed on the exterior face of the slab shall be protected by a durable and weather resistant material.

Note 5.—Storm doors not required for double doors, sliding doors or others where installation would be economically infeasible. 1¾ inch metal faced door systems with rigid insulation core and durable weatherstripping providing a "U" value equivalent to a wood door with storm door and an infiltration rate no greater than .50 cfm per foot of crack length, tested according to ASTM E-283 at 1.567 psf of air pressure, may be substituted for a conventional door and storm door. All doors shall be weatherstripped.

C. *Optional Standards.* Housing design not in compliance with the requirements of paragraphs IV A or B of this Exhibit may be approved in accordance with the provisions of this paragraph. Requests for acceptance proposed under paragraph C 1 below, which will be marketed solely within the juridictional area of one FmHA State Office may be approved by the State Director. Requests for acceptance proposed under paragraph C 1 which will be marketed within the juridictional areas of two or more FmHA State Offices and all requests for acceptance under paragraph C 2 must be approved by the Administrator. All submissions of proposed options to the State Director or Administrator shall contain complete descriptions of materials, engineering data, test data when U values claimed are lower than the ASHRAE Handbook of Fundamentals, and calculations to document the validity of the proposal. All data and calculations will be based upon the current edition of the ASHRAE Handbook of Fundamentals or other universally accepted data sources.

1 *Overall "U" values for envelope components.* The following requirements shall be used in determining acceptable options to the requirements of paragraphs IV A and IV B of this Exhibit.

a Uo (gross wall)—Total exterior wall area (opaque wall and window and door) shall have a combined thermal transmittance value (Uo value) not to exceed the values shown in Figure 1. Equation 1 shall be used to determine acceptable combinations to meet the requirements of Figure 1.

BILLING CODE 3410-07-M

Exhibit D
Page 8

Figure 1

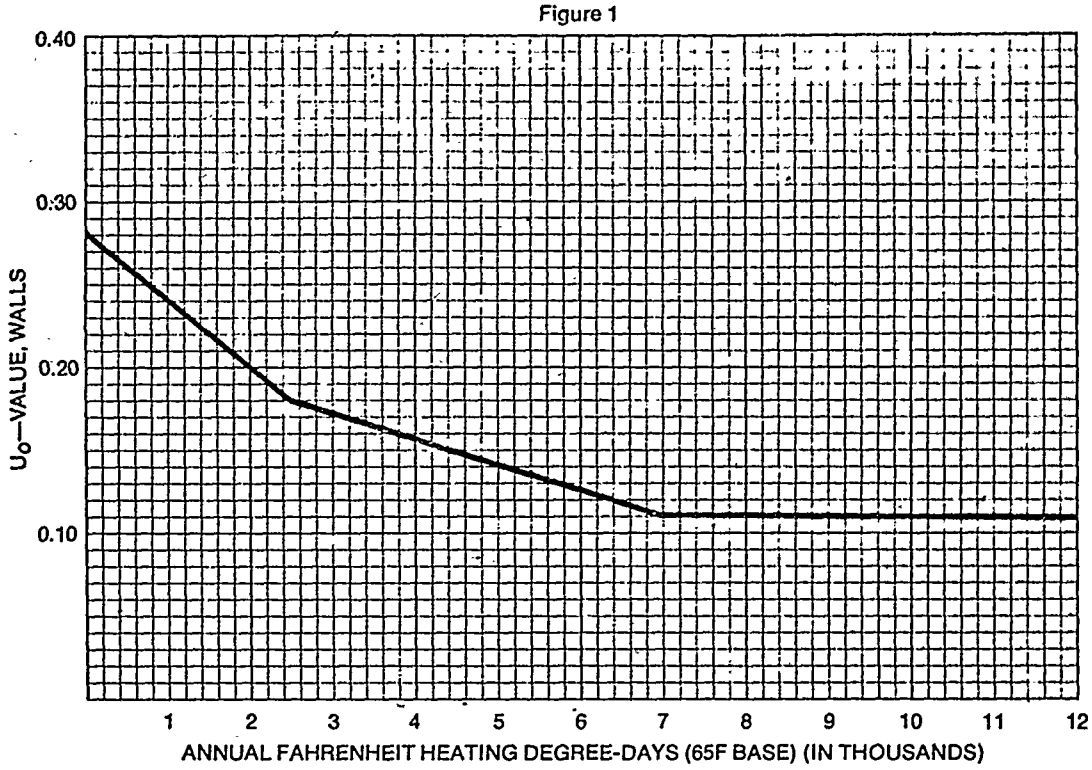

Equation 1, formula for determining combinations (See Figure 1):

$$U_O = \frac{U_{wall}A_{wall} + U_{window}A_{window} + U_{door}A_{door}}{A_O}$$

where:

U_O = the average thermal transmittance of the gross wall area, Btu/h•ft²•F

A_O = the gross area of exterior walls, ft²

U_{wall} = the thermal transmittance of all elements of the opaque wall area, Btu/h•ft²•F

A_{wall} = opaque wall area, ft²

U_{window} = the thermal transmittance of the window area, Btu/h•ft²•F

A_{window} = window area (including sash), ft²

U_{door} = the thermal transmittance of the door area, Btu/h•ft²•F

A_{door} = door area, ft²

Note: Where more than one type of wall, window and/or door is used, the U x A term for that exposure shall be expanded into its sub-elements, as:

$U_{wall_1}A_{wall_1} + U_{wall_2}A_{wall_2}$, etc.

b Uo (gross celing) - Total ceiling area (opaque ceiling and skylights) shall have a combined thermal transmittance value (Uo value) not to exceed the values shown in Figure 2. Equation 2 shall be used to determine acceptable combinations to meet the requirements of Figure 2.

Figure 2

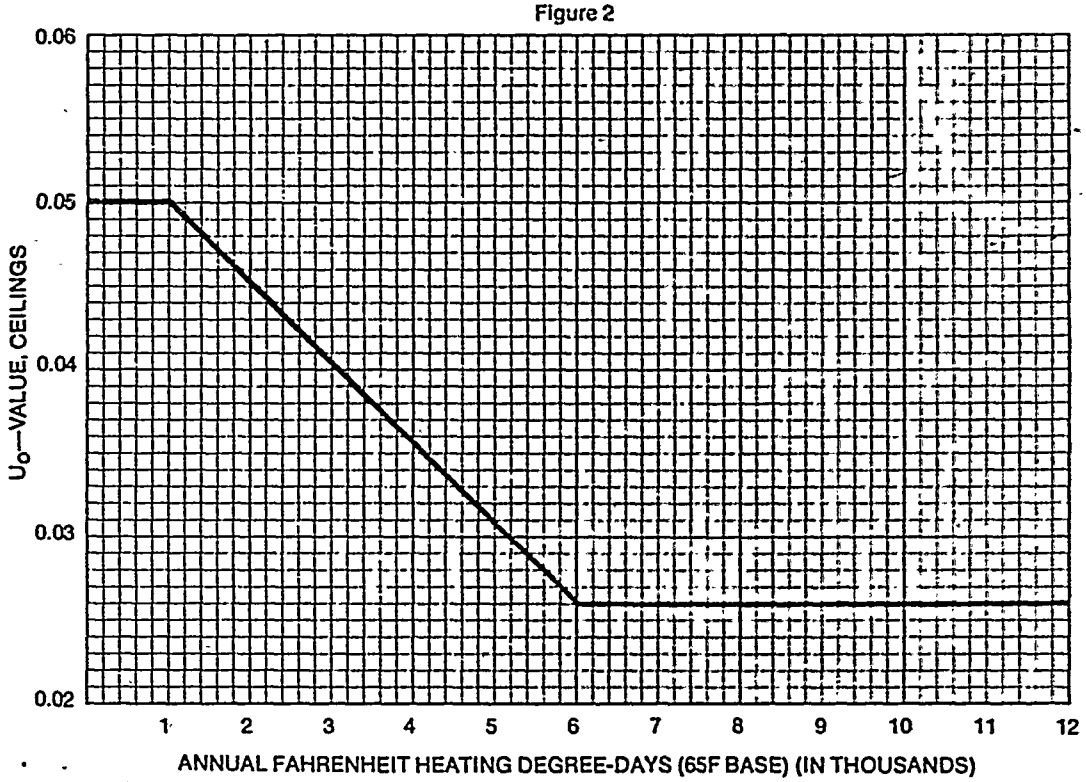

Equation 2, formula for determining roof/ceiling combinations:

$$U_o = \frac{U_{roof}A_{roof} + U_{skylight}A_{skylight}}{A_o}$$

where:

U_o = the average thermal transmittance of the gross roof/ceiling area, Btu/h•ft²•F

A_o = the gross area of a roof/ceiling assembly, ft²

U_{roof} = the thermal transmittance of all elements of the opaque roof/ceiling area, Btu/h•ft²•F

A_{roof} = opaque roof/ceiling area, ft²

$U_{skylight}$ = the thermal transmittance of all skylight elements in the roof/ceiling assembly, Btu/h•ft²•F

$A_{skylight}$ = skylight area (including frame), ft²

Note: Where more than one type of roof/ceiling and/or skylight is used, the U x A term for that exposure shall be expanded into its sub-elements, as:

$U_{roof_1}A_{roof_1} + U_{roof_2}A_{roof_2}$, etc.

c Uo (gross floor) - RESERVED

BILLING CODE 3410-07-C

2 *Overall structure performance.* The following requirements shall be used in determining acceptable options to the requirements of paragraphs IV A and B of this Exhibit.

a The methodology must be cost effective to the energy user, and must not adversely affect the structural capacity, durability or safety aspects of the structure.

b All data and calculations must show valid performance comparisons between the proposed option and a structure comparable in size, configuraton, orientation and occupant usage designed in accordance with paragraphs IV A or B. structures may be considered for FmHA loan consideration which can be shown by accepted engineering practice to have energy consumption equal to or less than those which would be attained in a representative structure utilizing the requirements of paragraphs IV A or B.

3 *Special consideration for seasonally occupied farm labor housing.* The following sets forth the minimum acceptable options to the requirements of paragraphs IV A or B of this Exhibit for seasonally occupied housing serving as security for farm labor housing loans and grants.

a Where period of occupancy does not encounter 500 or more heating degree days (HDD) as determined by an average of the previous 10 years based upon local climatological data published by the National Oceanic and Atmospheric Administration, Environmental Data Service, the standards of paragraphs IV A or B will not apply.

b Where the period of use exceeds 500 heating degree days (HDD), the 10-year average value for the period of occupancy shall be used to determine the degree to which the thermal insulation requirements of paragraphs IV A or B shall apply.

c If mechanical cooling is provided and the period of occupancy encounters more than 700 cooling degree days (CDD) as determined by an average of the previous 8 years based upon local climatological data published by the source cited in paragraph IV C 3 a above, the thermal insluation requirements for 1,000 and less degree days as stated in paragraph IV A or B shall apply.

D. *Energy efficient construction practices.* This section prescribes those items of design and quality control which are necessary to guarantee the energy efficiency of homes built according to the standards of this Exhibit. Also included are recommendations for extra energy efficiency in dwellings.

1 *Infiltration:*

a Requirements: All construction shall be performed in such a manner as to provide a building envelope free of excessive infiltration.

(1) Caulking and sealants. Exterior joints around windows and door frames, between wall cavities and window or door frames, between wall and foundation, between wall and roof, between wall panels, at penetrations of utility services through walls, floors and roofs, and all other openings in the exterior envelope shall be caulked, gasketed, weatherstripped, or otherwise sealed. Caulking shall be silicone rubber base or butyl rubber base, conforming to Federal-Specifications TT-S-1543 and TT-S-1657 respectively, or materials demonstrating equivalent performance in resilience and durability.

(2) Windows shall comply with ANSI 134.1, NWMA 15-2; the air infiltration rate shall not exceed 0.5. ft3/min per ft. of sash crack.

(3) Sliding glass doors shall comply with ANSI 134.2, NWMA 15-3; the air infiltration rate shall not exceed .5 ft3/min per square ft. of door area.

(4) All insulation placed in open cavity walls shall be installed so that all spaces behind electrical switches and receptacles, plumbing, ductwork and other osbtructions in the cavity are insluated as completely as possible. Insulation shall be omitted on the side facing the conditioned area, however, the vapor barrier in walls must not be cut or destroyed.

b Recommendations:

(1) Wrap outside corners of wall sheathing with 15 lb. asphalt impregnated building felt before siding application.

(2) Utilize vestibules for entry doors, expecially those facing into the direction of winter wind.

(3) In design of the home, place plumbing, mechanical and electrical in interior partitions as much as possible. If possible, design should comply with paragraph 615-5.3i of this MPS.

2 *Heating and/or Cooling Equipment.*

a. Requirements: All mechanical equipment for heating and/or cooling habitable space shall be designed to provide economy of operation.

(1) All space heating equipment (including fireplaces) requiring combustion air shall be sealed combustion types, or be located in a nonconditioned area (such as unheated basements) or adequate combustion air must be provided from outside the conditioned space.

(2) All ductwork shall be designed and installed so as to minimize leakage. All metal to metal connections shall be mechanically joined and taped.

b. Recommendations:

(1) Wherever possible, locate ductwork inside of conditioned areas in dropped ceilings, interior partitions or other similar areas.

(2) Locate outside cooling units in areas not subject to direct sunlight or heat buildup.

3 *Vapor Barrier:*

a. Requirements: Adequate vapor barriers must be provided adjacent to the interior finish material of the wall or other closed envelope components which do not have ventilation space on the nonconditioned side of the insulation.

(1) A vapor barrier at the inside of the wall or other closed envelope component must have a perm rating less than that of any other material in that component and in no case have a perm rating greater than one. All vapor barriers must be sealed around all openings in the interior surface. Vapor barriers are not required in ceilings and floors. Continuous vapor barriers on ceilings, walls, and floors requires adequate moisture vapor control in the conditioned space.

BILLING CODE 3410-07-M

(2) All vapor producing or exhausting equipment shall be ducted to the outside and be equiped with dampers. This equipment encludes rangehoods, bathroom exhaust fans, and clothes dryers. If a dwelling design proposes the use of windows to satisfy the kitchen and/or bathroom ventilation requirements of the MPS, the incorporation of dehumidification equipment should be considered in accordance with paragraph IV D 3 b. Exhaust of any equipment shall not terminate in an attic or crawl space.

b Recommendation: Forced air heating/cooling systems should include humidification/dehumidification systems where conditions indicate.

V GENERAL DESIGN RECOMMENDATIONS:

A Orient homes with greatest glass area facing south with adequate overhangs to control solar gain during non-heating periods.

Roof overhangs, or extensions of the roof, over south walls are usually easy to incorporate into house designs. To determine the *width of overhang* needed to shade a south wall or window, follow this method:

(1) Consider the *latitude* of the geographical area in which your house is located. (See map below.) Latitude, together with season of the year, determines the angle at which the sun's rays strike the earth at different times of day.

(2) Measure on your plan or house the number of feet the south windows extend below the eave of the roof or horizontal overhang. This measurement is the *shadow height*.

(3) Then for that specific latitude and shadow height, you will find, from the table given here, the exact width of overhang needed.

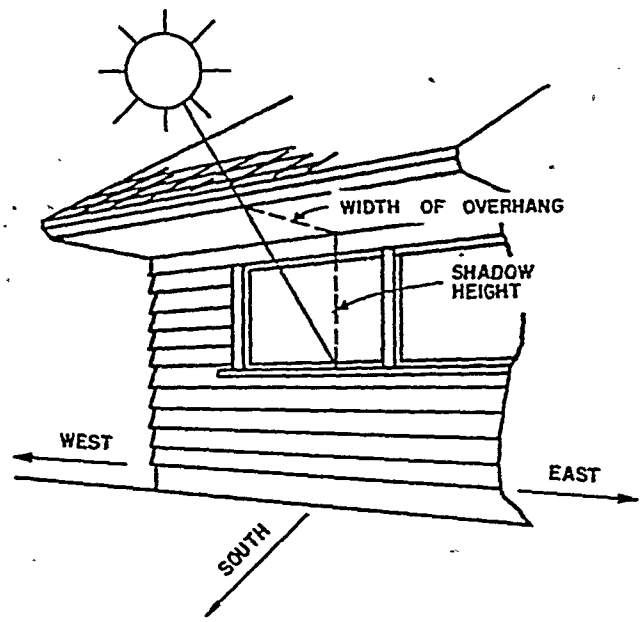

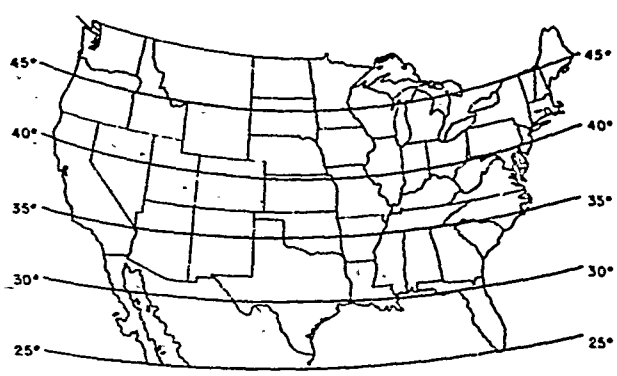

NORTH LATITUDE (DEGREES)	SHADOW HEIGHT (FEET) 3	4	5	6	7	8
	WIDTH OF OVERHANG (FEET)					
25	1.1	1.5	1.9	2.2	2.6	3.0
30	1.4	1.9	2.4	2.9	3.4	3.8
35	1.8	2.4	3.0	3.5	4.1	4.7
40	2.1	2.8	3.6	4.3	5.0	5.7
45	2.6	3.4	4.3	5.1	6.0	6.8
50	3.0	4.1	5.1	6.1	7.1	8.2

For example, in a latitude of 35° and for a shadow height of 5 feet, the width of overhang needed is 3 feet.

B. Arrange plantings with evergreen wind buffers on north side and deciduous trees on south.

C. Wherever possible orient entry door away from winter winds.

D. Design house with simple shape to minimize exterior wall area.

E. Minimize glass areas within constraints of required light and ventilation, applicable safety codes and other appropriate consideration.

F. Minimize the amount of paved surface adjacent to the structure where heat gain is not desirable.

VI State Instructions: State instructions or policies will not be issued or adopted to either supplement or set requirements different than those of this Exhibit without the prior written approval of the National Office.

Exhibit E—Preconstruction Conference

Prior to the signing of a construction contract, there shall be a discussion between the borrower(s), prospective contractor, architect (if applicable), and the County Supervisor or District Director, as applicable. During this discussion a mutual understanding should be reached on the following points:

1. The contract is between the borrower and the contractor and although FmHA is interested in the proper execution of the contract, it will not become a party to the contract nor incur any responsibility or liability thereunder.

2. The provisions contained in the drawings and specifications. Any changes made to the drawings and specifications will be initialed and dated on all copies by the contractor, the borrower, and the County Supervisor.

3. The contractor's obligation under the terms of the contract to do the work in accordance with the plans and specifications.

4. Compliance with the provisions contained in Form FmHA 424–6, "Construction Contract," or other authorized contract form being used.

5. FmHA will be consulted prior to any changes in the contract. Changes will be made only upon approval by FmHA.

6. The use of Form FmHA 424–7, "Contract Change Order." The Contract Change Order must be executed by the owner and contractor, and approved by FmHA. Any additional funds required must be provided by the owner.

7. The time for completion of construction and liquidated damages.

8. The State laws regarding the rights of persons furnishing material, equipment, or labor to place a claim or lien against the property in cases in which their bills are not paid.

9. The use of Form FmHA 424–10, "Release by Claimants," and Form FmHA 424–9, "Certificate of Contractor's Release."

10. The borrower's responsibility for making site visits as the work progresses.

11. Periodic and final inspections will be made by an authorized FmHA employee or representative to protect the security interest of the Government. The borrower is responsible for making any inspections necessary to adequately protect the interest of the borrower.

12. The contractor's responsibility of notifying FmHA that work is ready for inspection 2 working days prior to the date of the inspection.

13. The contractor's responsibility to provide a warranty upon completion of the work.

14. Any other pertinent information.

Exhibit F—Payment Bond

Know all Persons by These Presents: that

_____

(Name of Contractor)

_____

(Address of Contractor)
a (Corporation, Partnership or Individual), hereinafter called Principal and

_____

(Name of Surety)
hereinafter called Surety, are held and firmly bound unto

_____

(Name of Owner)

_____

(Address of Owner)
hereinafter called OWNER and the United States of America acting through the Farmers Home Administration hereinafter referred to as GOVERNMENT, and unto all persons, firms, and corporations who or which may furnish labor, or who furnish materials to perform as described under the contract and to their successors and assigns in the total aggregate penal sum of _____ Dollars ($_____) in lawful money of the United States, for the payment of which sum well and truly to be made, we bind ourselves, our heirs, executors, administrators, successors, and assigns, jointly and severally, firmly by these presents.

The condition of this obligation is such that whereas, the Principal entered into a certain contract with the OWNER, dated the _____ day of _____ 19—, a copy of which is hereto attached and made a part hereof for the construction of:

_____

_____

_____

Now, therefore, if the Principal shall promptly make payment to all persons, firms, and corporations furnishing materials for or performing labor in the prosecution of the WORK provided for in such contract, and any authorized extensions or modification thereof, including all amounts due for materials, lubricants, oil, gasoline, coal and coke, repairs on machinery, equipment and tools, consumed or used in connection with the construction of such work, and for all labor cost incurred in such work including that by a subconstractor, and to any mechanic or materialman lienholder whether it acquires its lien by operation of State or Federal law; then this obligation shall be void, otherwise to remain in full force and effect.

Provided, that beneficiaries or claimants hereunder shall be limited to the Subcontractors, and persons, firms, and corporations having a direct contract with the Principal or its subcontractors.

Provided, Further, that the said Surety for value received hereby stipulates and agrees that no change, extension of time, alteration or addition to the terms of the contract or to the WORK to be performed thereunder or the SPECIFICATIONS accompanying the same shall in any way affect its obligation on this BOND, and it does hereby waive notice of any such change, extension of time, alteration or addition to the terms of this contract or to the WORK or to the Specifications.

Provide, Further, that no suit or action shall be commenced hereunder by any claimant: (a) Unless claimant, other than one having a direct contract with the PRINCIPAL (or with the Government in the event the Government Is performing the obligations of the Owner), shall have given written notice to any two of the following: The Principal, the Owner, or the Surety above named within ninety (90) days after such claimant did or performed the last of the work or labor, or furnished the last of the materials for which said claim is made, stating with substantial accuracy the amount claimed and the name of the party to whom the materials were furnished, or for whom the work or labor was done or performed. Such notice shall be served by mailing the same by registered mail or certified mail, postage prepaid, in an envelope addressed to the PRINCIPAL, OWNER, or SURETY, at any place where an office is regularly maintained for the transaction of business, or served in any manner in which legal process may be served in the state in which the aforesaid project is located, save that such service need not be made by a public officer. (b) After the expiration of *one* (1) year following the date of which PRINCIPAL ceased work on said Contract, is being understood, however, that if any limitation embodied in the Bond is prohibited by any law controlling the construction hereof, such limitation shall be deemed to be amended so as to be equal to the minimum period of limitation permitted by such law.

Provided, Further, that it is expressly agreed that this BOND shall be deemed amended automatically and immediately, without formal and separate amendments hereto, upon amendment to the Contract not increasing the contract price more than 20 percent, as as to bind the PRINCIPAL and the SURETY to the full and faithful performance of the Contract as so amended. The term "Amendment", wherever used in this BOND and whether referring to this BOND, the contract or the loan Documents shall include any alteration, addition, extension or modification of any character whatsoever.

Provided, Further, that no final settlement between the OWNER or GOVERNMENT and the Contractor shall abridge the right of any beneficiary hereunder, whose claim may be unsatisfied.

In Witness Whereof, this instrument is executed in (Number) counterparts, each one of which shall be deemed an original, this the —— day of ————.

Attest:

_____

(Principal) Secretary
(Seal)

_____

Witness as to Principal

(Address)

Attest:

Witness as to Surety

(Address)

Principal
By
(s)

(Address)

Surety
By
Attorney-in-Fact

(Address)

Note.— Date of BOND must not be prior to date of Contract.

If Contractor is partnership, all partners should execute BOND. Important: Surety companies executing Bonds must appear on the Treasury Department's most current list (Circular 570 as amended) and be authorized to transact business in the State where the Project is located.

Exhibit G—Performance Bond

Know all Persons by These Presents: that

(Name of Contractor)

(Address of Contractor)
a (Corporation, Partnership, or Individual) hereinafter called Principal, and

(Name of Surety)

(Address of Surety)
hereinafter called Surety, are held and firmly bound unto ———

(Name of Owner)

(Address of Owner)
Hereinafter called Owner, and the United States of America acting through the Farmers Home Administration hereinafter referred to as the Government in the total aggregate penal sum of ——— Dollars ($———) in lawful money of the United States, for the payment of which sum well and truly to be made, we bind ourselves, our heirs, executors, administrators, successors, and assigns, jointly and severally, firmly by these presents.

The Condition of this Obligation is such that whereas, the Principal entered into a certain contract with the Owner, dated the ——— day of ——— 19—, a copy of which is hereto attached and made a part hereof for the construction of:

Now, Therefore, if the Principal shall well, truly and faithfully perform its duties, all the undertakings, covenants, terms, conditions, and agreements of said contract during the orignal term thereof, and any extensions thereof which may be granted by the Owner, or Government, with or without notice to the Surety and during the one year guaranty period and if the Principal shall satisfy all claims and demands incurred under such contract, and shall fully indemnify and save harmless the Owner and Government from all costs and damages which it may suffer by reason of failure to do so, and shall reimburse and repay the Owner and Government all outlay and expense which the Owner and Government may incur in making good any default, then this obligation shall be void, otherwise to remain in full force and effect.

Provided, further, that the liability of the Principal and Surety hereunder to the Government shall be subject to the same limitations and defenses as may be available to them against a claim hereunder by the Owner, provided, however, that the Government may, at its option, perform any obligations of the Owner required by the contract.

Provided, further, that the said Surety, for value received hereby stipulates and agrees that no change, extension of time, alteration or addition to the terms of the contract or to Work to be performed thereunder or the Specifications accompanying same shall in any way affect its obligation on this Bond, and it does hereby waive notice of any such change, extension of time, alteration or addition to the terms of the contract or to the Work or to the Specifications.

Provided, further, that is is expressly agreed that the Bond shall be deemed amended automatically and immediately, without formal and separate amendments hereto, upon amendment to the Contract not increasing the contract price more than 20 percent, so as to bind the Principal and the Surety to the full and faithful performance of the Contract as so amended. The term "Amendment", wherever used in this Bond, and whether referring to this Bond, the Contract or the Loan Documents shall include any alteration, addition, extension, or modification of any character whatsoever. Provided, further, that no final settlement between the Owner or Government and the Principal shall abridge the right of the other beneficiary hereunder, whose claim may be unsatisfied. The Owner and Government are the only beneficiaries hereunder.

In Witness Whereof, the instrument is excuted in (Number) counterparts, each one of which shall be deemed an original, this the ——— day of ———.

Attest:

(Principal) Secretary
(seal)

Witness as to Principal

(Address)

Attest:

Witness as to Surety

(Address)

Principal
By(s)

(Address)

Surety
By
Atorney-in-Fact

(Address)

Exhibit H—Prohibition of Lead-Based Paints

I. *Purpose:* This Exhibit prescribes the methods to be used to further comply with the requirements of the Lead-Based Paint Poisioning Prevention Act, Pub. L. 91-695, as amended, (42 U.S.C. 4801 et seq.) and the amendment to section 501 (3) of Pub. L. 91-695 (42 U.S.C. 4841 (3)) as amended by the National Consumer Health Information and Health Promotion Act of 1976, Pub. L. 94-317.

II. *Policy:* The Farmers Home Administration (FmHA) shall not permit the use of lead-based paint on applicable surfaces of any housing or buildings purchased, repaired, or rehabilitated with financial assistance provided by this agency. Paragraph 509-7.3 in the Minimum Property standards (MPS) prescribes the maximum lead content for the paint used on applicable surfaces.

III. *Definitions:* A: Housing and buildings mean any house, apartment, or structure intended for human habitation. This includes any institutional structure where persons reside, such as an orphanage, boarding school, dormitory, day care center or extended care facilities, college housing, domestic or migratory labor housing, hospitals, group practice facilities, community facilities, and business or industry.

B. Applicable surfaces means all interior surfaces, whether accessible or not, and those exterior surfaces which are readily accesible to children under 7 years of age such as stairs, decks, porches, railings, windows, and doors.

C. Lead-based paint means any paint containing more than .5 of 1 percentum lead by weight, or with respect to paint manufactured after June 22, 1977, lead-based paint containing more than six one-hundredths of 1 percentum lead by weight.

IV Requirements

A. All new housing and buildings shall comply with paragraph 509-7.3 of the MPS 4900.1 and 4910.1.

B. For all existing housing and buildings built after 1950, FmHA requires that for all loans closed after July 19, 1978, the applicant for a loan or the applicants or the tenants be notified of the potential hazard of lead-based paints, of the symptoms and treatment of lead poisoning, and of the importance and availability of maintenance and removal techniques for eliminating such hazards. This will be accomplished by providing each borrower or tenant with Exhibit E, Attachment 1, "Lead-based Paint Hazards, Symptoms, Treatment, and Techniques for Eliminating Hazards."

C. For all *existing housing* or buildings constructed before 1950 on which a loan is closed after July 19, 1978, FmHA requires that the applicant, borrower, or tenant be notified as in paragraph IV B and a copy of Exhibit E, Attachment 2, "Caution Note on Lead-Based Paint Hazard" shall be attached to Form FmHA 440–41, "Disclosure Statement for Loans Secured by Real Estate," or if 440–41 is not required, that the caution note be delivered to the hands of the borrower. The caution note shall read as follows:

"This housing was constructed before 1950. There is a possibility that it may contain some lead-based paint that was in use before 1950. See 'Lead-based Paint Hazards,' leaflet for more information."

For all property transfers and inventory property sales, the caution note, Exhibit E, Attachment 2, and the information leaflet, exhibit E, Attachment 1; shall be handed to the purchaser by the FmHA representative.

D. All inventory housing or buildings built before 1950 to be repaired, renovated, or rehabilitated shall have tests of lead content and where found to be hazardous, shall have any interior lead-based paint removed entirely. Loose or cracked surfaces shall be cleared down to the base surface before repainting with a paint containing not more than six one-hundredths of 1 percentum lead by weight in the total nonvolatile content of the paint or the equivalent measure of lead in the dried film of paint already applied or both. Contracting officers shall include the following provision prohibiting the use of lead-based paint in all contracts and subcontracts for construction or rehabilitation of housing or buildings:

Lead-Based Paint Prohibition

No lead-based paint containing more than .5 of 1 percentum lead by weight (calculated as lead metal) in the total nonvolatile content of the paint, or the equivalent measure of lead in the dried film of paint already applied, or both, or with respect to paint manufactured after June 22, 1977, no lead-based paint containing more than .06 of 1 percentum lead by weight (calculated as lead metal) in the total nonvolatile content of the paint, or the equivalent measure of lead in the dried film of paint already applied, or both, shall be used in the construction or rehabilitation of residential structures under this contract or any subsequent subcontractors.

Authority: This amendment is made under provisions of 5 U.S.C. 301, 40 U.S.C. 486 (c).

Done at ———, ——————— this ———— day of ———————, 19——.

FmHA Representative ————————————

V Summary

Section 401 of the Lead-based Paint Poisoning Prevention Act as amended by the National Consumer Health Information and Health Promotion Act of 1976, Pub. L. 94–317, provides a requirement that each Federal agency issue regulations and to take such other steps necessary to prohibit the use of lead-based paint on all applicable surfaces in Federal and Federally-assisted construction or rehabilitation of residential structures. The Lead-Based Paint Poisoning Act, Pub. L. 91–695, January 13, 1971, provides for grants to units of general local government in any State for the purpose of detecting and treating incidents of lead-based paint poisoning. Title II of this Act also provides for grants to the same units to identify those areas of risk including testing to detect the presence of lead-based paint on surfaces of residential housing.

BILLING CODE 3410-07-M

Exhibit H
Attachment 1

LEAD-BASED PAINT HAZARDS, SYMPTOMS, TREATMENT, AND TECHNIQUES FOR ELIMINATING HAZARDS

Your Federal Government is acting to provide children better protection from poisoning by lead in paint, but there are precautions parents can and should take for child safety.

HAZARD

The presence of lead in paint poses a hazard because youngsters eat chipped paint. These photographs show two ways in which children can swallow paint chips. At left, a child picks some paint off a door. Below, a child gnaws at a windowsill.

If you live in a house with old, peeling paint containing lead, your children may be quietly poisoning themselves.

By eating only a small number of lead paint chips a day, a young child can consume enough to poison himself or cause permanent brain damage. Lead poisoning, known as plumbism, kills about 200 children a year and causes the life-time institutionalization of 150 more who suffer severe mental retardation.

An estimated 600,000 children in metropolitan areas have elevated blood lead levels; however, about 2.5 million children are exposed to the danger of being poisoned from lead paint.

BILLING CODE 3410-07-C

The problem of lead paint poisoning came about because many years ago, lead-containing pigments were used extensively to give paint its colors. Anywhere from 10 percent to 50 percent of the actual paint, after it had dried on the wall, constituted a form of lead. As layer after layer of paint was applied, the walls became veritable lead mines. They also became sources of poison for your children.

The use of expensive lead became increasingly uneconomical. Shortly before World War II a substitute for lead pigments was developed, and the use of lead in paint gradually decreased thereafter. Since 1955, paint manufacturers have limited the lead in the interior paints to one percent.

Thus, any housing in this country built before the mid 1950's is a potential lead hazard. For the hazard to be real, two other ingredients are needed. One is poor maintenance, which permits paint to peel and flake. The second is the presence of small children who might pick paint from the wall or floor and put it in their mouths. By eating a paint chip the size of a fingernail, a young child can swallow as much as 100 times more than his body can safely handle. Over a period of weeks or months, children can slowly poison themselves.

The most serious hazards are in cities where most of the housing was built before the 1950's and is now poorly maintained. This includes most of the ghetto areas of America. The Department of Housing and Urban Development estimates there are seven million of these old run-down houses.

Although most lead poisoning occurs in dilapidated houses, even a well-maintained house can be a hazard for small children. For example, if a child bangs a crib or toys against the wall and old paint chips off, it could contain lead. Even in the best of homes, a child can chew on a windowsill painted with lead paint.

Lead poisoning poses a particular hazard for children between the ages of 1 and 6 because of an eating abnormality called pica. This is a craving to eat things which are not food. Children with pica will eat anything within reach—cigarette butts, matches, dirt, newspapers, clay, plaster . . . and paint.

Pica is an old phenomenon, observed all over the world. The Romans many centuries ago named the condition "pica" after the magpie which picks up a wide variety of objects in its beak out of hunger or curiosity.

The dominant characteristic of pica is its compulsive hold on children. A mother can be hard put to prevent her child from eating nonfood substances.

Doctors know little about the causes of pica, and are a long way from finding a cure, if there is one. Studies have shown that up to 40 percent of children around one year old have pica. The tendency decreases as the child gets older, and averages around 20 percent for the entire age group of 1 to 6 years.

If a child does become poisoned by eating lead paint, medicines can be administered to remove the lead from the body. Medicines keep the mortality rate down from lead paint poisoning to 5 percent of the human victims. However, one out of four survivors of acute lead poisoning suffers permanent brain damage, and has learning difficulties, mental retardation, or epilepsy.

The only effective way to fight lead poisoning is to remove the child from contact with the source of lead. This can be accomplished in two ways:

1. Take the child away from the lead.
2. Take the lead away from the child.

Where housing is scarce, the first solution will be, in the long run, only a form of musical apartments. Whichever child moves into the residence with lead paint on the walls becomes "it".

Only the second solution deals with the problem in a permanent way. The obstacle here is money. Lead paint cannot just be painted over, because it would still be present in any paint chips which might flake off.

The only really permanent solutions are to remove all the old paint by blow torch, scraping, or other method, or to cover up old paint with wallboard or another covering.

Symptoms and Treatment

Here are some steps which parents can take to prevent their children from being poisoned by lead.

1. Never allow your child to eat paint or plaster.
2. Be alert for several of the lead-poisoning symptoms listed below.

- decreased appetite
- irritability
- clumsiness
- unwillingness to play
- headache
- abdominal pain
- drowsiness
- vomiting

3. If your child has several of these symptoms or you suspect he or she may be eating paint, your child should be tested. Call your local health department to find out if your city has a lead poisoning prevention program. If it does, ask the program officers where to take your child for a blood-lead test.

If your community does not have a lead poisoning prevention program, take your child to a doctor or clinic and explain that you want to find out if he or she has lead poisoning. If the blood test shows your child has too much lead, make sure the doctor reports this to the local health department so it can test the paint in your home to find out whether it should be replaced or covered over. In many cities the landlord can be ordered by the city to remove or cover over dangerous paint.

Eliminating Hazards

To eliminate the lead hazard, you ought to take precautions. Remove all peeling plaster or paint from walls or ceiling. Do as much as possible by brushing or scraping. When sanding is necessary, get lots of ventilation since breathing lead paint dust can also be dangerous. If the peeling is caused by moisture from a leaky pipe, fix it.

After all loose paint has been removed, cover the walls. It is important that the walls be scraped smooth of peeling paint and any grease is washed off because peeling paint or a greasy wall makes it difficult for any covering to stick to the wall. There are several ways to cover the walls: You can repaint them with an interior paint. A latex paint is appropriate. You can also cover them with wallpaper, contact paper, or paneling.

Remember that a child can chew right through a new coat of paint on edges like windowsills, banisters, and door edges. These should either be covered with contact paper or scraped and sanded down to the wood to remove the lead paint. Replaster any holes in the wall so they make a smooth surface, flat with the rest of the wall. This will make it harder for children to grab onto the plaster and pull off pieces to put into their mouths.

Lead poisoning from paint is a serious and difficult problem which a previous generation inadvertently created for our children. Once lead paint is on the walls, it is difficult and costly to remove. This is why a limit on the amount of lead in paint is so important, why you must use reasonable caution today, and why the Congress and FDA have taken action to protect the children of tomorrow.

Reminders

In carrying out these steps to prevent lead poisoning, you should bear these facts in mind to direct increased attention where it is needed:

- Although children get lead poisoning between the ages of 1 and 6, the most vulnerable are those around 1 or 2 years old. They should be watched with special care.
- The vast majority of lead poisonings occur during the summer months. Children should be carefully watched during the summer to prevent them from eating lead paint.
- The most likely place in an apartment to have high lead content is the windowsill, which is often painted with a different kind of paint than the walls. The windowsill is also one place where children can gnaw on the paint even if it is not peeling. Make sure to remove or cover any paint on the windowsill which might contain lead.

This information was adapted from DHEW Publication No. (FDA)73-7016, a reprint from October 1972 FDA "Consumer" magazine.

USDA-FmHA-ETS
January 1978

Attachment 2

CAUTION NOTE ON LEAD-BASED PAINT HAZARD

THIS HOUSE WAS CONSTRUCTED BEFORE 1950

There is a possibility that it may contain some lead-based paint that was in use before 1950.

See Lead-Based Paint Hazards leaflet for more information.

This caution note is to be *attached* to Form FmHA 440-41, "Disclosure Statement for Loans Secured by Real Estate," when loans are made on existing housing or buildings constructed prior to 1950.

CAUTION NOTE ON LEAD-BASED PAINT HAZARD

THIS HOUSE WAS CONSTRUCTED BEFORE 1950

There is a possibility that it may contain some lead-based paint that was in use before 1950.

See Lead-Based Paint Hazards leaflet for more information.

This caution note is to be *attached* to Form FmHA 440-41, "Disclosure Statement for Loans Secured by Real Estate," when loans are made on existing housing or buildings constructed prior to 1950.

Note.—This regulation has not been determined significant under the USDA criteria implementing Executive Order 12044. A copy of the Impact Statement prepared according to these criteria is available from the Office of the Chief, Directives Management Branch, Farmers Home Administration, U.S. Department of Agriculture, Room 6346, Washington, D.C. 20250

Note.—This document has been reviewed in accordance with FmHA Instruction 1901-G, "Environmental Impact Statements." It is the determination of FmHA that the proposed action does not constitute a major Federal action significantly affecting the quality of the human environment, and in accordance with the National Environmental Policy of 1969, Public Law 91-190, an Environmental Impact Statement is not required.

(7 U.S.C. 1989; 42 U.S.C. 1480; delegation of authority by the Secretary of Agriculture, 7 CFR 2.23; delegation of authority by the Assistant Secretary for Rural Development, 7 CFR 2.70)

Dated: June 27, 1979.

Gordon Cavanaugh,

Administrator, Farmers Home Administration.

[FR Doc. 79-20814 Filed 7-5-79; 8:45 am]

BILLING CODE 3410-07-M

DEPARTMENT OF ENERGY

[10 CFR Part 490]

Emergency Building Temperature Restrictions: Revised Allocation of Federal Funds to Meet State Enforcement Costs

AGENCY: Department of Energy.

ACTION: Notice of Intent.

SUMMARY: This notice provides revised information regarding the amount of Federal funds that will be allocated to States or Territories which receive from the Department of Energy delegations of authority to implement the President's Standby Conservation Plan No. 2, Emergency Building Temperature Restrictions.

FOR FURTHER INFORMATION CONTACT:
Henry G. Bartholomew, Office of Buildings and Community Systems, Office of Conservation and Solar Applications, Department of Energy, 20 Massachusetts Avenue, NW., Room 2221C, Washington, D.C. 20585 (202) 376-4476

Mary Doyle, Office of General Counsel, Department of Energy, 20 Massachusetts Avenue, NW., Room 3228, Washngton, D.C. 20585 (202) 376-4100

SUPPLEMENTARY INFORMATION: On June 18, 1979 (44 FR 34965), the Department of Energy (DOE) published a Notice of Intent listing the amount of Federal funds which would be allocated to States or Territories who requested and received from DOE delegations of authority to implement the President's "Standby Conservation Plan No. 2, Emergency Building Temperature Restrictions." In response to public comment, DOE has modified these allocations, particularly the allocation for the Commonwealth of Puerto Rico. Under this modification, the allocation for Puerto Rico is determined according to the same formula used to compute the allocation for each of the fifty States. Public comment identified the need for this modification in light of Puerto Rico's population, which surpasses the population of a number of States. The modification does not significantly affect the allocation for any other State or Territory. In addition, the allocation for the Canal Zone, which was erroneously overstated in the June 18 Notice of Intent, has been corrected. The modified list of allocations follows:

STATE ENFORCEMENT ALLOCATIONS

STATE/ TERRITORY	POPULATION (1978)*	25% EQUAL ALLOCATIONS TO ALL STATES	75% BASED ON POPULATION (STATES & TERRITORIES)	TOTAL STATE/ TERRITORY ALLOCATION
Alabama	3,742,000	$ 32,212	$ 84,842	$ 117,054
Alaska	403,000	32,212	9,135	41,347
Arizona	2,354,000	32,212	53,370	85,582
Arkansas	2,186,000	32,212	49,561	81,773
California	22,294,000	32,212	505,462	537,674
Colorado	2,670,000	32,212	60,536	92,748
Connecticut	3,099,000	32,212	70,264	102,476
Delaware	583,000	32,212	13,216	45,428
District of Columbia	674,000	32,212	15,281	47,493
Florida	8,594,000	32,212	194,848	227,060
Georgia	5,084,000	32,212	115,268	147,480
Hawaii	897,000	32,212	20,336	52,548
Idaho	878,000	32,212	19,909	52,121
Illinois	11,243,000	32,212	254,907	287,119
Indiana	5,374,000	32,212	121,841	154,053
Iowa	2,896,000	32,212	65,661	97,873
Kansas	2,348,000	32,212	53,235	85,447
Kentucky	3,498,000	32,212	79,309	111,521
Louisiana	3,966,000	32,212	89,922	122,134
Maine	1,091,000	32,212	24,738	56,950
Maryland	4,143,000	32,212	93,932	126,144
Massachusetts	5,774,000	32,212	130,911	163,123
Michigan	9,189,000	32,212	208,341	240,553
Minnesota	4,008,000	32,212	90,872	123,084
Mississippi	2,404,000	32,212	54,506	86,718
Missouri	4,836,000	32,212	109,645	141,857
Montana	785,000	32,212	17,798	50,010
Nebraska	1,565,000	32,212	35,481	67,693
Nevada	660,000	32,212	14,964	47,176
New Hampshire	871,000	32,212	19,748	51,960
New Jersey	7,327,000	32,212	166,121	198,333
New Mexico	1,212,000	32,212	27,482	59,694
New York	17,748,000	32,212	402,395	434,607
N. Carolina	5,577,000	32,212	126,443	158,655
N. Dakota	652,000	32,212	14,783	46,995
Ohio	10,749,000	32,212	243,706	275,918
Oklahoma	2,880,000	32,212	65,300	97,512
Oregon	2,444,000	32,212	55,410	87,622
Pennsylvania	11,750,000	32,212	266,404	298,616
Puerto Rico	3,205,000	32,212	72,666	104,878
Rhode Island	935,000	32,212	21,200	53,412
S. Carolina	2,918,000	32,212	66,159	98,371
S. Dakota	690,000	32,212	15,643	47,855
Tennessee	4,357,000	32,212	98,786	130,998
Texas	13,014,000	32,212	295,062	327,274
Utah	1,307,000	32,212	29,632	61,844
Vermont	487,000	32,212	11,040	43,252
Virginia	5,148,000	32,212	116,720	148,932
Washington	3,774,000	32,212	85,565	117,777
W. Virginia	1,860,000	32,212	42,170	74,382
Wisconsin	4,679,000	32,212	106,087	138,299
Wyoming	424,000	32,212	9,613	41,825
American Samoa	30,100		683	683
Canal Zone	40,000		904	904
Guam	95,900		2,176	2,176
Trust Territories of the Pacific Islands	125,500		2,844	2,844
Virgin Islands	94,900		2,151	2,151
TOTAL	221,632,400	$1,675,024	$5,024,984	$6,700,008

* Territories - 1976; Source: Bureau of Census

BILLING CODE 6450-01-C

Issued in Washington, D.C., July 3, 1979.

Maxine Savitz,

Deputy Assistant Secretary Conservation and Solar Applications.

[FR Doc. 79-21112 Filed 7-5-79; 8:45 am]

BILLING CODE 6450-01-M

FEDERAL DEPOSIT INSURANCE CORPORATION

[12 CFR Part 340]

Offering Circular Requirements for Public Issuance of Bank Securities; Withdrawal of Proposed Rule

AGENCY: Federal Deposit Insurance Corporation ("FDIC").

ACTION: Publication of Notice of Withdrawal of Proposed Rule.

SUMMARY: On February 25, 1974 and May 27, 1977 the FDIC published for public comment a proposed Part 340 to its rules and regulations. The proposed Part 340 was designed to ensure compliance by insured State nonmember banks with minimum standards for the disclosure of material facts in connection with the offer and sale of securities by such banks. In view of the length of time the proposal has been before the public without being acted upon, the FDIC has decided to withdraw the proposal from consideration.

EFFECTIVE DATE: July 6, 1979.

ADDRESS: Hoyle L. Robinson, Executive Secretary, Federal Deposit Insurance Corporation, 550-17th Street, N.W., Washington, D.C. 20429.

FOR FURTHER INFORMATION CONTACT:

Aurthur L. Beamon, Senior Attorney, Legal Division, Federal Deposit Insurance Corporation, Washington, D.C. 20429 (202-389-4422), or

Lawrence H. Pierce, Chief, Registration and Disclosure Section, Division of Bank Supervision, Federal Deposit Insurance Corporation, Washington, D.C. 20429 (202-389-4651).

SUPPLEMENTARY INFORMATION: The FDIC has recently adopted a Statement of Policy regarding the development and review of FDIC rules and regulations (See 44 Federal Register 31007). As part of that Statement of Policy it was announced that it is the intention of the FDIC to formally withdraw any proposed regulation on which final action by the Board of Directors of FDIC has not been taken within nine months from the date the regulation was last proposed for comment. It was further indicated that if the FDIC wished to reconsider a proposed regulation that has been withdrawn, FDIC would begin the rulemaking process anew (*i.e.*, republish in the Federal Register, resolicit comments, etc.). Proposed Part 340 was originally published for comment on February 25, 1974 and reissued for comment on May 27, 1977 (See 42 Federal Register 27955).

In connection with the 1977 republication of proposed Part 340 for comment, the FDIC noted that a number of insured State nonmember banks, on their own initiative, has sought to comply with the proposal and had voluntarily submitted offering circulars for review by FDIC staff. The FDIC noted at that time that such submissions were encouraged. Such submissions are still encouraged. FDIC has also generally required and will continue to require the use of offering materials by banks that are subject to orders issued under Section 8 of the Federal Deposit Insurance Act (12 U.S.C. 1818).

It is the responsibility of all insured State nonmember banks to comply with the disclosure requirements of the Federal securities laws in the offer and sale of securities. Because proposed Part 340 has been outstanding for such an extensive period of time, FDIC is concerned that the proposal may not adequately reflect recent developments and standards applicable under the Federal securities laws. Adequate guidance as to the proper format and content of offering circulars is already available through regulations promulgated by other Federal regulatory agencies. See, for example, 12 CFR Part 16 of the Comptroller of the Currency and the Securities and Exchange Commission's Regulation A, 17 CFR § 230.51, *et seq.*

The FDIC believes as indicated above that insured State nonmember banks can prepare adequate offering materials without the necessity for a formal regulation such as the proposed Part 340. Moreover, the withdrawal of the proposal is in keeping with FDIC's policy favoring the shortening and simplification of its regulatory requirements wherever possible.

Interested persons are invited to submit their written data, views or comments with respect to the above action to Hoyle L. Robinson, Executive Secretary, Federal Deposit Insurance Corporation, 550-17th Street, N.W., Washington, D.C. 20429. Any such comments, views or opinions or other data received will be made available for public inspection during regular business hours at the Office of the Executive Secretary, Room 6018, at the above address.

Because this action does not impose any new or additional requirements on insured State nonmember banks, the rulemaking procedures set forth in the Administrative Procedure Act (5 U.S.C. § 553(b)(d)) with respect to notice, public participation, and deferred effective date were not followed. This action will be effective immediately.

By order of the Board of Directors, July 2nd, 1979.

Federal Deposit Insurance Corporation.

Hannah R. Gardiner,

Assistant Secretary.

[FR Doc. 79-20948 Filed 7-5-79; 8:45 am]

BILLING CODE 6714-01-M

DEPARTMENT OF HEALTH, EDUCATION, AND WELFARE

Food and Drug Administration

[21 CFR Part 433]

[Docket No. 79N-0149]

Antibiotics for Human Use; Exemption of Dermatologic and Vaginal Antibiotic Drug Products From Certification

AGENCY: Food and Drug Administration.

ACTION: Proposed rule.

SUMMARY: The Food and Drug Administration (FDA) is proposing to amend the antibiotic drug regulations to provide for exemption from batch certification of all human antibiotic drug products intended for dermatologic and vaginal use. Because of the high level of manufacturer compliance with existing standards, the agency has tentatively determined that batch-by-batch testing by FDA is not necessary for these types of antibiotic drug products. Under the exemption, manufacturers would not be required to obtain, prior to marketing, certification of each batch of antibiotic drug product covered by the exemption.

DATE: Written comments by September 4, 1979.

ADDRESS: Written comments to the Hearing Clerk (HFA-305), Food and Drug Administration, Rm. 4-65, 5600 Fishers Lane, Rockville, MD 20857.

FOR FURTHER INFORMATION CONTACT: Robert J. Rice, Jr., Bureau of Drugs (HFD-30), Food and Drug Administration, Department of Health, Education, and Welfare, 5600 Fishers Lane, Rockville, MD 20857, 301-443-5220.

SUPPLEMENTARY INFORMATION: Section 507 of the Federal Food, Drug, and Cosmetic Act (21 U.S.C. 357) requires the certification of batches of antibiotic drugs if the drugs have characteristics of identity, strength, quality, and purity, as prescribed by regulation, found necessary to adequately insure safety

and efficacy of use. Unless specifically exempted by regulation, every batch of an antibiotic drug product (dosage form) and the antibiotic drug used in preparing the drug product must be certified by FDA prior to marketing. As part of the certification procedures in § 431.1 (21 CFR 431.1), manufacturers are required to submit a sample of each batch and other relevant information to FDA, including the results of their own tests for that batch. If, on the basis of this information and substantiation testing of the batch, FDA determines that the antibiotic drug conforms to the applicable standards of identity, strength, quality, and purity, the agency certifies the batch and issues a certificate pertaining to that batch.

Certification of antibiotic drugs began in 1945 with penicillin. At that time, Congress gave FDA the authority (sec. 507 was added by act of July 6, 1945, Pub. L. 79-139, 59 Stat. 463) to certify individual batches of this medically important new class of drugs. Certification of every batch was considered necessary because of the new and difficult technology involved in producing and testing drugs obtained from microbiological sources. Later, as other antibiotic drugs were discovered, the act was amended (March 10, 1947 (Pub. L. 80-16; 61 Stat. 12); July 13, 1949 (Pub. L. 81-164; 63 Stat. 409); August 5, 1953 (Pub. L. 83-201; 67 Stat. 389); and October 10, 1962 (Pub. L. 87-781; 76 Stat. 780 et seq.)) to extend the batch certification requirements to cover them. The Drug amendments of 1962 (Pub. L. 87-781; 76 Stat. 780 et seq.) authorized batch certification of all antibiotic drugs intended for use in humans and for certain ones for veterinary use.

The original section 507(c), which was added to the act in 1945, provided for an exemption from batch certification, as prescribed by regulation, when certification had been found unnecessary to insure safety and efficacy of use. The Drug Amendments of 1962 amended these provisions by adding to section 507(c) factors to be considered in determining whether an exemption from batch certification should be granted. These amendments also provided, in section 507(e), that the new drug provisions of section 505 of the act would apply, when applicable, to an antibiotic drug exempted from batch certification.

On December 3, 1953 (18 FR 7672), FDA exempted certain penicillin and bacitracin antibiotic drug products from the requirements for batch certification. Certain problems arose, however, as a result of the exemption. Data became available showing that nonsterile, subpotent, and otherwise defective batches of these exempted antibiotic drug products were being marketed. In addition, at that time there was no requirement that new manufacturers obtain premarketing approval through the new drug provisions under section 505 for exempted antibiotic drugs. Thus, the capability to manufacture drugs of appropriate quality could not be determined through either the certification procedures or through the new drug approval process prior to marketing the antibiotic drug. Therefore, in the Federal Register of February 16, 1972 (37 FR 3426), the agency revoked the exemption.

In the Federal Register of April 19, 1966 (31 FR 5959), FDA published regulations (§ 433.1 (21 CFR 433.1)) setting forth conditions for exempting from certification antibiotic drug products for local or topical use. When all the conditions of this section are met, a manufacturer no longer is required to apply for and obtain certification of each batch of that manufacturer's product covered by the exemption.

One condition in § 433.1 is that manufacturers must petition FDA for exemption from batch certification for their individual products. The agency notes that manufacturers have rarely sought to use these exemption provisions. In the last 2 years only five petitions under § 433.1, involving six dermatologic drug products, have been received. Two petitions were granted for three dermatologic antibiotic drugs produced by two manufacturers; the remaining petitions, recently received, are currently under review.

FDA is undertaking an extensive review of antibiotic testing procedures under the certification program with a view toward eliminating or modifying batch certification requirements where they are no longer necessary to insure the safety and efficacy of antibiotic drugs. This policy is consistent with the exemption authority of section 507(c) of the act, which provides that when, in the judgment of the Secretary, batch certification requirements for any antibiotic drug or class of antibiotic drugs are not necessary to insure safety and efficacy of use, regulations shall be published exempting such antibiotic drugs from batch certification. Section 507(c) also provides:

* * * In deciding whether an antibiotic drug, or class of antibiotic drugs, is to be exempted from the requirement of certification the Secretary shall give consideration, among other relevant factors, to—

(1) whether such drug or class of drugs is manufactured by a person who has, or hereafter shall have, produced fifty consecutive batches of such drug or class of drugs in compliance with the regulations for the certification thereof within a period of not more than eighteen calendar months, upon the application by such person to the Secretary; or

(2) whether such drug or class of drugs is manufactured by any person who has otherwise demonstrated such consistency in the production of such drug or class of drugs, in compliance with the regulations for the certification thereof, as in the judgement of the Secretary is adequate to insure the safety and efficacy of use thereof.

* * * * *

As a result of this review of the antibiotic certification program, the agency has tentatively concluded that the state of manufacturing technology and the high level of compliance with existing monograph requirements demonstrated by manufacturers generally, meet the requirements for consistency set forth in section 507(c) of the act and warrant exempting certain classes of antibiotic drug products from batch certification.

Antibiotic Drug Products for Dermatologic and Vaginal Use

As a first step in implementing this program, this notice proposes to exempt from batch certification all (with a few exceptions, discussed later) dermatologic and vaginal antibiotic drug products. These products are being considered in advance of other antibiotic classes because limited provisions for their exemption already exist in § 433.1, although the present conditions for their exemption are more restrictive than those contemplated under this proposal. Also, the agency believes dermatologic and vaginal products are most appropriate for first consideration because their manner of use, i.e., local or topical application with a relatively low level of absorption, poses less risk to the public than do other dosage forms.

FDA notes that dermatologic and vaginal antibiotic drug products have demonstrated a high level of consistency in the quality of their manufacture over the past several years. For example, during approximately the last 2 years, 3,117 batches of dermatologic antibiotic drug products from 23 manufacturers were certified and only 8 batches involving 4 manufacturers were rejected. During the same 2-year period, 185 batches of vaginal antibiotic drug products from 6 manufacturers were certified and only one batch was rejected. This represents a rejection rate of approximately one-half of one percent or less for these two classes of antibiotic drug products during the last 2 years.

This level of competence in manufacture demonstrates a consistency of production sufficient to warrant consideration of exemption from batch certification under section 507(c) of the act.

The agency proposes, therefore, that § 433.1 be revised to provide a general exemption from batch certification of dermatologic and vaginal antibiotic drug products. A few products, unique to this class because of microbiological limits established for them, are excluded from the proposed exemption under § 433.1. These are discussed in more detail in the "Products Excluded" section of this preamble.

Requirements for Exempted Antibiotic Drug Products

Manufacturers of dermatologic and vaginal antibiotic drug products under these proposed regulations would be exempted from obtaining certification from FDA of each manufactured batch. Thus, manufacturers would not be required to submit to FDA samples and test results for individual batches and could distribute these drug products as a result of their own testing and without notification by FDA that a specific batch is certified.

These dermatologic and vaginal antibiotic drug products would continue to be required to meet all standards of identity, strength, quality, and purity under the appropriate antibiotic monographs. In addition, manufacturers would be required to continue to conform to all applicable provisions of the current good manufacturing practice (CGMP) regulations in Part 211 (21 CFR Part 211). FDA would continue to inspect establishments for compliance with good manufacturing practice requirements and would continue surveillance of the products in the marketplace through routine sampling and testing programs. These mechanisms, together with the requirements under the new drug provisions of section 505 of the act (21 U.S.C. 355) (discussed later under "New Drug Status"), should be adequate to insure the continued quality of these drug products. This proposal would insure premarket approval of new manufacturers entering the market, approval of proposed changes in any condition of an approved application, and continued reports of misadventures with these drug products.

The proposed regulation would continue the requirement that batches of bulk antibiotic drugs used in preparing the drug product have been determined by FDA through certification procedures to meet the monograph requirements for the bulk antibiotic drugs (Subpart A of Parts 440 through 455 (21 CFR Parts 440 through 455), as appropriate). The bulk antibiotic drugs used in manufacturing exempt products would still be either certified or released by FDA prior to their use in manufacturing finished dosage forms. Almost all of the bulk antibiotic drugs used in preparing dermatologic and vaginal antibiotic drug products are also used to prepare other drug products such as oral and injectable products. Because of the administrative difficulties of recordkeeping and enforcement problems that could result from certified and uncertified batches of the same bulk antibiotic drug in the channels of commerce, the agency believes it is not currently in the public's interest to propose exemption of the bulk antibiotic drug used to prepare dematologic and vaginal antibiotic drug products. In future steps of this overall revision of certification program, FDA will reconsider whether batches of bulk antibiotic drugs used in preparing the drug products should be exempted from certification.

The failure by an individual manufacturer to comply with the conditions of exemption under § 433.1 could result in a revocation of the exemption for that manufacturer under the provisions of § 433.2 (21 CFR 433.2).

Finally, proposed § 433.1(e) would codify the provisions of section 507(c) of the act that allow manufacturers to obtain certification of a batch of antibiotic drug product exempted from batch certification if the manufacturer applies for and meets the requirements for certification.

New Drug Status

In accord with section 507(e) of the act, the antibiotic drug products that will be exempt from batch certification under this proposed § 433.1 will be considered to be new drugs and subject to section 505 of the act. To implement that policy, the agency will consider exempting any approved antibiotic drug product from the requirements of sections 502(1) and 507 of the act to be equivalent to approving a new drug application (NDA) for the product under section 505. Thus, any antibiotic drug product exempted under proposed § 433.1 of the regulation would, on the effective date of the final regulation issued under this proposal, be subject to the requirements of section 505 of the act and regulations for new drugs, generally in Parts 310 through 314 (21 CFR Parts 310 through 314).

On the effective date of the final regulation, all approved antibiotic Form 5 applications for dermatologic or vaginal antibiotic drug products on file with FDA would be deemed to be approved full NDA's under § 314.1(a). Approved antibiotic Form 6 applications for these preparations would be deemed to be approved abbreviated new drug applications (ANDA's) under § 314.1(f).

After the effective date of the final regulations, the agency would continue to require the submission of an antibiotic Form 5 from any person seeking approval to market a new antibiotic drug product for dermatologic or vaginal use for which no monograph exists, and an antibiotic Form 6 from any person seeking approval to market an antibiotic drug product for dermatologic or vaginal use for which there is an approved monograph. On the approval date of the antibiotic Form 5 or Form 6, the approved form, together with the information that accompanied it, would be considered an approved NDA or ANDA, respectively. This means, in essence, that on the date of approval of an antibiotic Form 5 of Form 6 for a product for dermatologic or vaginal use, the approved product is exempt from the certification and subject to the new drug requirements of section 505 of the act.

Drug Products Affected

The following antibiotic drug products, monographs for which are found in 21 CFR Subchapter D at the section noted, would be exempt from the requirements for batch certification under proposed § 433.1:

Section and Antibiotic Drug Product

§ 444.520a Gentamicin sulfate ointment.
§ 444.520b Gentamicin sulfate cream.
§ 444.540a Neomycin palmitate-trypsin-chymotrypsin ointment.
§ 444.542a Neomycin sulfate ointment; neomycin sulfate-——— ointment (the blank being filled in with the established name(s) of the other active ingredient(s) present in accordance with paragraph (a)(1) of [§ 444.542a]).
§ 444.542b Neomycin sulfate-——— cream (the blank being filled in with the established name(s) of the other active ingredient(s) present in accordance with paragraph (a)(1) of [§ 444.542b]).
§ 444.542c Neomycin sulfate-——— lotion (the blank being filled in with the established name(s) of the other active ingredient(s) present in accordance with paragraph (a)(1) of [§ 444.542c]).
§ 444.542d Neomycin sulfate aerosol.
§ 444.542e Neomycin sulfate-polymyxin B sulfate ointment.
§ 444.542f Neomycin sulfate-gramicidin topical ointment; neomycin sulfate-gramicidin-triamcinolone acetonide ointment; neomycin sulfate-gramicidin-fludrocortisone acetate ointment.

§ 444.542g Neomycin sulfate-gramicidin-triamcinolone acetonide cream.
§ 444.542h Neomycin sulfate-gramicidin-trimacinolone acetonide lotion; neomycin sulfate-gramicidin-fludrocortisone acetate lotion.
§ 444.542i Neomycin sulfate-triamcinolone acetonide topical aerosol; neomycin sulfate-dexamethasone topical aerosol.
§ 444.542j Neomycin sulfate-polymyxin B-sulfate-gramicidin-benzocaine ointment.
§ 444.542k Neomycin sulfate (commercial grade)-aluminum chlorohydroxide cream deodorant.
§ 444.5421 Neomycin sulfate (commercial grade)-aluminum chlorohydroxide deodorant lotion; neomycin sulfate (commercial grade)-aluminum chlorohydroxide-aluminum chloride deodorant lotion.
§ 444.542m Neomycin sulfate-aluminum chlorohydroxide deodorant lotion.
§ 446.510 Chlortetracycline hydrochloride ointment.
§ 446.567a Oxytetracycline hydrochloride-hydrocortisone topical ointment.
§ 446.567b Oxytetracycline hydrochloride-polymyxin B sulfate topical ointment.
§ 446.567c Oxytetracycline hydrochloride-polymyxin B sulfate topical powder.
§ 446.567e Oxytetracycline hydrochloride-polymyxin B sulfate-hydrocortisone aerosol topical.
§ 446.581 Tetracycline hydrochloride ointment.
§ 446.581c Tetracycline hydrochloride for topical solution.
§ 446.667 Oxytetracycline hydrochloride-polymyxin B sulfate vaginal tablets.
§ 448.510a Bacitracin ointment.
§ 448.510d Bacitracin-neomycin sulfate ointment.
§ 448.510e Bacitracin-neomycin sulfate-polymyxin B sulfate ointment.
§ 448.513a Bacitracin zinc-polymyxin B sulfate ointment.
§ 448.513b Bacitracin zinc-neomycin sulfate ointment.
§ 448.513c Bacitracin zinc-neomycin sulfate-polymyxin B sulfate ointment; bacitracin zinc-neomycin sulfate-polymyxin B sulfate hydrocortisone ointment.
§ 448.513f Bacitracin zinc ointment.
§ 449.504a Amphotericin B ointment.
§ 449.504b Amphotericin B cream.
§ 449.504c Amphotericin B lotion.
§ 449.550a Nystatin ointment.
§ 449.550b Nystatin-iodochlorhydroxyquin ointment.
§ 449.550c Nystatin-neomycin sulfate-gramicidin-trimacinolone acetonide ointment; nystatin-neomycin sulfate-gramicidin-fludrocortisone acetate ointment.
§ 449.550d Nystatin cream.
§ 449.550e Nystatin-neomycin sulfate-gramicidin-triamcinolone acetonide cream.
§ 449.550f Nystatin topical powder.
§ 449.550g Nystatin-neomycin sulfate-gramicidin topical powder.
§ 449.550h Nystatin lotion.
§ 449.610a Candicidin vaginal ointment.
§ 449.610b Candicidin vaginal tablets.
§ 449.610c Candicidin vaginal capsules.
§ 449.650a Nystatin vaginal tablets.
§ 449.650b Nystatin vaginal suppositories.
§ 452.510a Erythromycin ointment.
§ 455.503a Calcium amphomycin-neomycin sulfate-hydrocortisone acetate cream.
§ 455.510a Chloramphenicol ointment (chloramphenicol cream).
§ 455.510c Chloramphenicol-polymyxin ointment.

FDA would maintain in the Code of Federal Regulations (CFR) the regulations (monographs) under which these drugs have been certified in the past. These will serve as public standards. Moreover, as new antibiotic drug products are approved under applicable antibiotic Form 5's or Form 6's, the regulations would be amended to include appropriate monographs. Marketing, however, would not be delayed pending publication of a monograph in the Federal Register.

Products Excluded

The proposed regulation would not apply to dermatologic drug products for which microbiological limits are currently a requirement for certification. Dermatologic drug products that require such microbiological limits are intended for use in surgery and other medical conditions where a significant amount of the drug is likely to be introduced into an open wound. Because of the risks involved in this kind of application, the agency has tentatively concluded that these drug products, which are few in number, should not be considered candidates for this proposed exemption. There are currently only two dermatologic drug products, bacitracin zinc-neomycin sulfate-polymyxin B sulfate topical powder, listed in § 448.513d (21 CFR 448.513d), and bacitracin zinc-neomycin sulfate-polymyxin B sulfate topical aerosol, listed in § 448.513e (21 CFR 448.513e) that are subject to microbiological limits.

Any final regulation issued under this proposal is not intended to pre-empt findings under the Drug Efficacy Study Implementation (DESI) review or the Over-the-Counter (OTC) Drug Review, and any drug product subject to requirements from either of those reviews must still conform to them. Insofar as any such requirements might conflict with the requirements of a final rule based on this proposal, the former would prevail. Approval through the proposed procedure of conferring NDA or ANDA approval at the time the final regulation becomes effective, of a drug product whose effectiveness has not been resolved in the DESI program, has the same status as that of any other less-than-effective DESI drug that is the subject of an approved or effective NDA.

Because no similar products are currently certified for animal use under section 512(n) of the Act (21 U.S.C. 360b(n)), no corresponding exemption is being proposed for animal drugs at this time. If, in the future, approval is granted for a product for animal use for which an exemption has been granted when the product is labeled for human use, consideration will be given at that time for its exemption from certification.

FDA has determined that this document does not contain an agency action covered by § 25.1(b) (21 CFR 25.1(b)) and, therefore, consideration by the agency of the need for preparing an environmental impact statement is not required.

Therefore, under the Federal Food, Drug, and Cosmetic Act (secs. 505, 507, 52 Stat. 1050–1053 as amended, 59 Stat. 463 as amended (21 U.S.C. 355, 357)) and under authority delegated to the Commissioner of Food and Drugs (21 CFR 5.1), it is proposed that Part 433 be amended by revising the heading and text of § 433.1 to read as follows:

§ 433.1 Exemption of dermatologic and vaginal antibiotic drug products from certification.

(a) The dermatologic and vaginal antibiotic drug products for human use, listed in paragraph (b) of this section, are exempt from the requirements of Part 431 of this chapter for batch certification under the following conditions:

(1) Each antibiotic drug product for a specific manufacturer has been approved for marketing under an appropriate antibiotic Form 5 or Form 6.

(2) The drug product is packaged and labeled for dispensing and is labeled solely for dermatologic or vaginal use.

(3) The batch of bulk antibiotic drug used in preparing the drug product has been certified or released by the Food and Drug Administration in accordance with this chapter and has been found to meet the standards of identity, strength, quality, ad purity specified in the applicable regulations (monograph) in this chapter.

(4) The drug product meets the standards of identity, strength, quality, and purity specified in the applicable regulations (monograph) in this chapter except that if a monograph was not published, the standards approved in the applicable antibiotic Form 5 or Form 6 shall apply.

(b) The following antibiotic drug products listed by section headings of this chapter are exempt from

certification under the provisions of this section:

Section and Antibiotic Drug Product

§ 444.520a Gentamicin sulfate ointment.
§ 444.520b Gentamicin sulfate cream.
§ 444.540a Neomaycin palmitate-trypsin-chymotrypsin ointment.
§ 444.542a Neomycin sulfate ointment; neomycin sulfate——— ointment (the blank being filled in with the established name(s) of the other active ingredient(s) present in accordance with paragraph (a)(1) of [§ 444.542a]).
§ 444.542b Neomycin sulfate——— cream (the blank being filled in with the established name(s) of the other active ingredient(s) present in accordance with paragraph (a)(1) of [§ 444.542b]).
§ 444.542c Neomycin sulfate——— lotion (the blank being filled in with the established name(s) of the other active ingredient(s) present in accordance with paragraph (a)(1) of [§ 444.542c]).
§ 444.542d Neomycin sulfate aerosol.
§ 444.542e Neomycin sulfate-polymyxin B sulfate ointment.
§ 444.542f Neomycin sulfate-gramicidin topical ointment; neomycin sulfate-gramicidin/triamcinolone acetonide ointment; neomycin sulfate-gramicidin-fludrocortisone acetate ointment.
§ 444.542g Neomycin sulfate-gramicidin-triamcinolone acetonide cream.
§ 444.542h Neomycin sulfate-gramicidin-triamcinolone acetonide lotion; neomycin sulfate- gramicidin-fludrocortisone acetate lotion.
§ 444.542i Neomycin sulfate-triamcinolone acetonide topical aerosol; neomycin sulfate-dexamethasone topical aerosol.
§ 444.542j Neomycin sulfate-polymyxin B sulfate-gramicidin-benzocaine ointment.
§ 444.542k Neomycin sulfate (commercial grade)-aluminum chlorohydroxide cream deodorant.
§ 444.542l Neomycin sulfate (commercial grade)-aluminum chlorohydroxide deodorant lotion; neomycin sulfate (commercial grade)-aluminum cholorhydroxide-aluminum chloride deodorant lotion.
§ 444.542m Neomycin sulfate-aluminum chlorohydroxide deodorant lotion.
§ 446.510 Chlortetracycline hydrochloride ointment.
§ 446.567a Oxytetracycline hydrochloride-hydrocortisone topical ointment.
§ 446.567b Oxytetracycline hydrochloride-polymyxin B sulfate topical ointment.
§ 446.567c Oxytetracycline hydrochloride-polymyxin B sulfate topical powder.
§ 446.567e Oxytetracycline hydrochloride-polymyxin B sulfate-hydrocortisone aerosol topical.
§ 446.581 Tetracycline hydrochloride ointment.
§ 446.581c Tetracycline hydrochloride for topical solution.
§ 446.667 Oxytetracyline hydrochloride-polymyxin B sulfate vaginal tablets.
§ 448.510a Bacitracin ointment.
§ 448.510d Bacitracin-neomycin sulfate ointment.
§ 448.510e Bacitracin-neomycin sulfate-polymyxin B sulfate ointment.
§ 448.513a Bacitracin zinc-polymyxin B sulfate ointment.
§ 448.513b Bacitracin zinc-neomycin sulfate ointment.
§ 448.513c Bacitracin zinc-neomycin sulfate-polymyxin B sulfate ointment; bacitracin zinc-neomycin sulfate-polymyxin B sulfate hydrocortisone ointment.
§ 448.513f Bacitracin zinc ointment.
§ 449.504a Amphotericin B ointment.
§ 449.505b Amphotericin B cream.
§ 449.504c Amphotericin B lotion.
§ 449.550a Nystatin ointment.
§ 449.550b Nystatin-iodochlorhydroxyquin ointment.
§ 449.550c Nystatin-neomycin sulfate-gramicidin-triamcinolone acetonide ointment; nystatin-neomycin sulfate-gramicidin-fludrocortisone acetate ointment.
§ 449.550d Nystatin cream.
§ 449.550e Nystatin-neomycin sulfate-gramicidin-triamcinolone acetonide cream.
§ 449.550f Nystatin topical powder.
§ 449.550g Nystatin-neomycin sulfate-gramicidin topical powder.
§ 449.550h Nystatin lotion.
§ 449.610a Candicidin vaginal ointment.
§ 449.610b Candicidin vaginal tablets.
§ 449.610c Candicidin vaginal capsules.
§ 449.650a Nystatin vaginal tablets.
§ 449.650b Nystatin vaginal suppositories.
§ 452.510a Erythromycin ointment.
§ 455.503a Calcium amphomycin-neomycin sulfate-hydrocortisone acetate cream
§ 455.510a Chloramphenicol ointment (chloramphenicol cream).
§ 455.510c Chloramphenicol-polymyxin ointment.

(c) The following drug products, whose existing certification requirements contain specific microbiological limits, are not exempted from certification under this section: bacitracin zinc-neomycin sulfate-polymycin B sulfate topical powder (§ 448.513d of this chapter) and bacitracin zinc-neomycin sulfate-polymyxin B sulfate topical aerosol (§ 448.513e of this chapter).

(d) In accordance with provisions of section 507(e) of the act, an antibiotic-containing drug product for human use exempt from the requirements for batch certification under this section is subject to section 505 of the act and applicable regulations for new drug products, generally Parts 310 through 314 of this chapter. On the date of an exemption under this section:

(1) An approved antibiotic Form 5 for an exempt drug product is regarded to be an approved new drug application under § 314.1(a) of this chapter.

(2) An approved antibiotic Form 6 for an exempt drug product is regarded to be an approved abbreviated new drug application under § 314.1(f) of this chapter.

(e) Nothing in this section shall prevent a manufacturer from applying for batch certification of a dermatologic or vaginal antibiotic drug product as provided in section 507(c) of the act.

Interested persons may, on or before September 4, 1979, submit to the Hearing Clerk (HFA-305), Food and Drug Administration, Rm. 4-65, 5600 Fishers Lane, Rockville, MD 20857, written comments regarding this proposal. Four copies of all comments shall be submitted, except that individuals may submit single copies of comments. The comments are to be identified with the Hearing Clerk docket number found in brackets in the heading of this document. Received comments may be seen in the above office between 9 a.m. and 4 p.m., Monday through Friday.

In accordance with Executive Order 12044, the economic effects of this proposal have been carefully analyzed, and it has been determined that the proposed rulemaking does not involve major economic consequences as defined by that order. A copy of the regulatory analysis assessment supporting this determination is on file with the Hearing Clerk, Food and Drug Administration.

Dated: June 26, 1979.

Sherwin Gardner,

Acting Commissioner of Food and Drugs.

[FR Doc. 79-20-577 Filed 7-5-79; 8:45 am]
BILLING CODE 4110-03-M

DEPARTMENT OF STATE

Office of the Secretary

[22 CFR Parts 7, 50, and 51]

[Docket No. SD-147]

Board of Appellate Review, Nationality Procedures, Passports; Miscellaneous Amendments

AGENCY: Department of State.

ACTION: Proposed rule.

SUMMARY: The Department of State proposes to revise and amend the regulations relating to the Board of Appellate Review and to procedures for the disposition of appeals from administrative determinations of loss of nationality or expatriation made by the Department of State and from decisions of the Assistant Secretary of State for Consular Affairs denying, revoking, restricting, or invalidating a passport. The proposed revision incorporates the substance of regulations on the subject of appeals in nationality and passport cases that appear in other parts of the regulations, and makes certain

improvements in appeal procedures before the Board of Appellate Review.

The proposed amendments to regulations relating to nationality procedures and passports are necessary to conform to the proposed revision of the regulations of the Board of Appellate Review.

DATES: Written comments by the public are invited within the period ending August 6, 1979.

ADDRESS: Send written comments to Edward G. Misey, Chairman, Board of Appellate Review, Department of State, Washington, D.C. 20520.

FOR FURTHER INFORMATION CONTACT: Edward G. Misey, (703) 235-9610.

SUPPLEMENTARY INFORMATION: The proposed revision of Part 7, Board of Appellate Review, is designed to update and improve the present regulations in light of developments which have occurred since the regulations were promulgated in 1967. The proposed revision essentially incorporates in Part 7 the substance of §§ 50.60 through 50.72, Subpart D, Procedures for Review of Loss of Nationality, Part 50, Nationality Procedures, and §§ 51.89 through 51.105, Part 51, Passports. These regulations appearing in Parts 50 and 51 relate exclusively to appeal procedures before the Board. The proposed revision also clarifies certain procedural matters with respect to the filing of appeals, submission of briefs, limitations on actions, and decisions of the Board.

As to limitations on filing appeals, it is proposed that a person, who contends that a Department's administrative determination of loss of nationality or expatriation is contrary to law or fact, shall be entitled upon written request made within one year after approval by the Department of the certificate of loss of nationality or a certificate of expatriation to appeal such determination to the Board. With respect to a person who has been the subject of an adverse passport decision by the Assistant Secretary of State for Consular Affairs, such person shall be entitled upon written request made within 60 days after receipt of notice of the adverse passport decision to file an appeal with the Board. It is further proposed that a decision of the Board in nationality and passport cases shall be final and not subject to further administrative review. The Board, however, may entertain a motion for reconsideration of a decision, if filed within 30 days from the date of receipt of a copy of the decision.

The proposed amendment of section 50.52, Notice of Right of Appeal, in Part 50, Nationality Procedures, is designed to make clear that, when an approved certificate of loss of nationality or certificate of expatriation is forwarded to the person to whom it relates or his or her representative, such person or representative shall be informed of the right to appeal the Department's determination within one year after approval of the certificate of loss of nationality or the certificate of expatriation. Part 50 is further amended to conform with the proposed revision of Part 7 by deleting §§ 50.60 through 50.72.

The proposed amendment of § 51.89, Decision of Administrator of the Bureau of Security and Consular Affairs, Part 51, Passports, changes the title of that section to read "Decision of Assistant Secretary for Consular Affairs; Notice of Right of Appeal." Under the proposed amendment of § 51.89, a person adversely affected in a passport case shall be informed of his or her right to appeal the decision within 60 days after receipt of notice of the adverse decision; and, if no appeal is made within 60 days, the decision will be considered final and not subject to further administrative review. Part 51 is further amended to conform with the proposed revision of Part 7 by deleting §§ 51.90 through 51.105.

Accordingly, it is proposed to amend Title 22, Code of Federal Regulations, as follows:

1. Part 7 is revised to read as set forth below.

PART 7—BOARD OF APPELLATE REVIEW

Sec.

7.1 Definitions.
7.2 Establishment of Board of Appellate Review; purpose.
7.3 Jurisdiction.
7.4 Membership and organization.
7.5 Procedures.
7.6 Hearings.
7.7 Passport cases.
7.8 Decisions.
7.9 Motion for reconsideration.
7.10. Computation of time.
7.11 Attorneys.

Authority: Sec. 4, 63 Stat. 111, as amended, 22 U.S.C. 2658; Sec. 104, 66 Stat. 174, 8 U.S.C. 1104.

§ 7.1 Definitions

(a) "Board" means the Board of Appellate Review or the panel of three members considering an appeal.

(b) "Department" means the Department of State.

(c) "Party" means the appellant or the Department of State.

§ 7.2 Establishment of Board of Appellate review; purpose.

(a) There is hereby established the Board of Appellate Review of the Department of State to consider and determine appeals within the purview of § 7.3. For administrative purposes, the Board shall be part of the Office of the Legal Adviser.

(b) The Board shall take any action it considers appropriate and necessary to the disposititon of cases appealed to it. The merits of appeals or decisions of the Board shall not be subject to review by the Legal Adviser or Deputy Legal Advisers.

§ 7.3 Jurisdiction.

The jurisdiction of the Board shall include appeals from decisions in the following cases:

(a) Appeals from administrative determinations of loss of nationality or expatriation under Part 50 of this Chapter.

(b) Appeals from decisions of the Assistant Secretary for Consular Affairs denying, revoking, restricting, or invalidating a Passport under Part 51 of this Chapter.

(c) Appeals from final decisions of contracting officers arising under contracts or grants of the Department of State, not otherwise provided for in the Department of State contract appeal regulations (Part 6-60 of Title 41).

(d) Appeals from administrative decisions of the Department of State in such other cases and under such terms of reference as the Secretary of State may authorize.

§ 7.4 Membership and organization.

(a) *Membership.* The Board shall consist of regular and ad hoc members as the Legal Adviser may designate. Regular members shall serve on a full-time basis. Ad hoc members may be designated from among senior officers of the Department of State or from among persons not employed by the Department. Regular and ad hoc members shall be attorneys in good standing admitted to practice in any State of the United States, the District of Columbia, or any Territory or possession of the United States.

(b) *Chairman.* The Legal Adviser shall designate a regular member of the Board as Chairman. A member designated by the Chairman shall act in the absence of the Chairman. The Chairman or designee shall preside at all proceedings before the Board, regulate the conduct of such proceedings, and pass on all issues relating thereto. The Chairman or

designee shall have authority to administer oaths and affirmations.

(c) *Composition.* In considering an appeal, the Board shall act through a panel of three members, not more than two of whom shall be ad hoc members.

(d) *Rules of procedure.* The Board may adopt and promulgate rules of procedure approved by the Secretary of State as may be necessary to govern its proceedings.

§ 7.5 Procedures.

(a) *Filing of appeal.* A person, who has been the subject of an adverse decision in a case falling within the purview of § 7.3, shall be entitled upon written request made within the prescribed time to appeal the decision to the Board. The appeal shall be in writing and shall state with particularity reasons for the appeal. The appeal may be accompanied by a legal brief. An appeal filed after the prescribed time shall be denied unless the Board shall determine for good cause shown that the appeal could not have been filed within the prescribed time.

(b) *Time limit on appeal.* (1) A person who contends that the Department's administrative determination of loss of nationality or expatriation under Part 50 of this Chapter is contrary to law or fact, shall be entitled upon written request made within one year after approval by the Department of the certificate of loss of nationality or a certificate of expatriation to appeal such determination to the Board.

(2) A person, who has been subject of an adverse decision under § 51.89, Part 51 of this Chapter, shall be entitled upon written request made within 60 days after receipt of notice of such decision to appeal the decision to the Board.

(c) *Department case record.* Upon the written request of the Board, the office or bureau in the Department of State responsible for the decision from which the appeal was taken, shall assemble and transmit to the Board within 45 days the record on which the Department's decision in the case was based. The case record may be accompanied by a memorandum setting forth the position of the Department on the case.

(d) *Briefs.* Briefs in support of or in opposition to an appeal shall be submitted in triplicate to the Board. The appellant shall submit his or her brief within 60 days after filing of the appeal. The Department shall then file a brief within 60 days after receipt of a copy of appellant's brief. Reply briefs, if any, shall be filed within 30 days after the date the Department's brief is filed with the Board. Extension of time for submission of a reply brief may be granted by the Board for good cause shown. Posthearing briefs may be submitted upon such terms as may be agreed to by the parties and the presiding member of the Board at the conclusion of a hearing.

(e) *Hearing.* An appellant shall be entitled to a hearing upon written request to the Board. An appellant may elect to waive a hearing and submit his or her appeal for decision on the basis of the record before the Board.

(f) *Pre-hearing conference.* Whether there is a hearing before the Board on an appeal or whether an appeal is submitted for decision on the record without a hearing, the Board may call upon the parties to appear before a member of the Board for a conference to consider the simplification or clarification of issues and other matters as may aid in the disposition of the appeal. The results of the conference shall be reduced to writing by the parties in the presence of the Board member, and this writing shall constitute a part of the record.

(g) *Admissibility of evidence.* Except as otherwise provided in § 7.7, the parties may introduce such evidence as the Board deems proper. Formal rules of evidence shall not apply, but reasonable restrictions shall be imposed as to the relevancy, competency and materiality of evidence presented.

(h) *Depositions.* The Board may, upon the written request of either party or upon agreement by the parties, permit the taking of the testimony of any person by deposition upon oral examination or written interrogatories for use as evidence in the appeal proceedings. The deponent shall be subject to cross-examination either by oral examination or by written interrogatories by the opposing party or by the Board. Leave to take a deposition shall not be granted unless it appears impracticable to require the deponent's testimony at the hearing on the appeal, or unless the taking of a deposition is deemed to be warranted for other valid reasons.

(i) *Record of proceedings.* The record of prceedings before the Board shall consist of the Department's case record, briefs and other written submissions of the parties, the stipulation of facts, if any, the evidence admitted, and the transcrcipt of the hearing, if there is a hearing. The record shall be available for inspection by the parties at the Office of the Board.

(j) *Scope of review.* Except as otherwise provided in § 7.7, the Board shall review the record in the case before it. The Board shall not consider argument challenging the constitutionality of any law or of any regulation of the Department of State or take into consideration any classified or administratively controlled material.

(k) *Appearance before the Board.* Any party to any proceeding before the Board is entitled to appear in person or by or with his or her attorney, who must possess the requisite qualifications, set forth in § 7.11, to practice before the Board.

(l) *Failure to prosecute an appeal.* Whenever the record discloses the failure of an appellant to file documents required by these regulations, respond to notices or correspondence from the Board, or otherwise indicates an intention not to continue the prosection of an appeal, the Board may in its discretion terminate the proceedings without prejudice to the later reinstatement of the appeal for good cause shown.

§ 7.6 Hearings.

(a) *Notice and place of hearing.* The parties shall be given at least 15 days notice in writing of the scheduled date and place of a hearing on an appeal. The Board shall have final authority to fix or change any hearing date giving due consideration to the convenience of the parties. Hearings shall be held at the Department of State, Washington, D.C., unless the Board determines otherwise.

(b) *Conduct of hearing.* The appellant may appear and testify on his own behalf. The parties may present witnesses, offer evidence and make argument. The appellant and witnesses may be examined by any member of the Board, by the Department, and by the appellant's attorney, if any. If any witness whom the appellant or the Department wishes to call is unable to appear personally, the Board, in its discretion, may accept an affidavit by the witness or grant leave to take the deposition of such witness. Any such witness will be subject to cross examination by means of sworn responses to interrogatories posed by the opposing party. The appellant and the Department shall be entitled to be informed of all evidence before the Board and of the source of such evidence, and to confront and cross-examine any adverse witness. The Board may require a stipulation of facts prior to or at the beginning of the hearing and may require supplemental statements on issues presented to it, or confirmation, verification or authentication of any evidence submitted by the parties. The parties shall be entitled to reasonable continuances upon request for good cause shown.

(c) *Privacy of hearing.* The hearing shall be private unless an appellant requests in writing that the hearing be open to the public. Attendance at the hearing shall be limited to the appellant, attorneys of the parties, the members of the Board, Department personnel who are directly involved in the presentation of the case, official stenographers, and the witnesses. Witnesses shall be present at the hearing only while they are giving testimony or when otherwise directed by the Board.

(d) *Transcript of hearing.* A complete verbatim transcript shall be made of the hearing by a qualified report, and the transcript shall constitute a permanent part of the record. Upon request, the appellant shall have the right to inspect the complete transcript and to purchase a copy thereof.

(e) *Nonappearance of a party.* The unexcused absence of a party at the time and place set for a hearing shall not be occasion for delay. In the event of such absence, the case will be regarded as having been submitted by the absent party on the record before the Board.

§ 7.7 Passport cases.

(a) *Scope of review.* With respect to appeals taken from decisions of the Assistant Secretary for Consular Affairs denying, revoking, restricting, or invalidating a passport under Part 51 of this Chapter, the Board's review, except as provided in paragraph (b) of this section, shall be limited to the record on which the Assistant Secretary's decision was based.

(b) *Admissibility of evidence.* The Board shall not receive or consider evidence or testimony not presented at the hearing held under §§ 51.81–51.89, Part 51 of this Chapter, unless it is satisfied that such evidence or testimony was not available or could not have been discovered by the exercise of reasonable diligence prior to such hearing.

§ 7.8 Decisions.

The Board shall decide the appeal on the basis of the record of the proceedings. The decision shall be by majority vote in writing and shall include findings of act and conclusions of law on which it is based. The decision of the Board shall be final. Copies of the Board's decision shall be forwarded promptly to the parties.

§ 7.9 Motion for reconsideration.

The Board may entertain a motion for reconsideration of a Board's decision, if filed by either party. The motion shall state with particularity the grounds for the motion, including any facts or points of law which the filing party claims the Board has overlooked or misapprehended, and shall be filed within 30 days from the date of receipt of a copy of the decision of the Board by the party filing the motion. Oral argument on the motion shall not be permitted. However, the party in opposition to the motion will be given opportunity to file a memorandum in opposition to the motion within 30 days of the date the Board forwards a copy of the motion to the party in opposition. If the motion to reconsider is granted, the Board shall review the record, and, upon such further reconsideration, shall affirm, modify, or reverse the original decision of the Board in the case.

§ 7.10 Computation of time.

In computing the period of time for taking any action under this part, the day of the act, event, or notice from which the specified period of time begins to run shall not be included. The last day of the period shall be included, unless it falls on a Saturday, Sunday, or a legal holiday, in which event the period shall extend to the end of the next day which is not a Saturday, Sunday, or a legal holiday. The Board for good cause shown may in its discretion enlarge the time prescribed by this part for the taking of any action.

§ 7.11 Attorneys.

(a) Attorneys at law who are admitted to practice in any State of the United States, the District of Columbia, or any Territory or possession of the United States, and who are members of the Bar in good standing, may practice before the Board unless disqualified under paragraph (b) of this section or for some other valid reason.

(b) No attorney shall be permitted to appear before the Board as attorney representing an appellant if he or she is subject to the conflict of interest provisions of chapter 11 of Title 18 of the United States Code.

PART 50—NATIONALITY PROCEDURES

2. Part 50, Nationality Procedures, is amended by adding a new § 50.52 to read as set forth below, and to delete Subpart D, Procedures for Review of Loss of Nationality, §§ 50.60 through 50.72.

§ 50.52 Notice of right to appeal.

When an approved certificate of loss of nationality or certificate of expatriation is forwarded to the person to whom it relates or his or her representative, such person or representative shall be informed of the right to appeal the Department's determination to the Board of Appellate Review (Part 7 of this Chapter) within one year after approval of the certificate of loss of nationality or the certificate of expatriation.

§§ 50.60–50.72 [Revoked]

(Sec. 4, 63 Stat. 111, as amended, 22 U.S.C. 2658; Sec. 104, 66 Stat. 174, 8 U.S.C. 1104.)

PART 51—PASSPORTS

3. Part 51, Passports, is amended by changing the title of section 51.89 and by incorporating in § 51.89 part of § 51.90 to read as set forth below, and to delete the remaining §§ 51.90 through 51.105.

§ 51.89 Decision of Assistant Secretary for Consular Affairs; notice of right to appeal.

The person adversely affected shall be promptly notified in writing of the decision of the Assistant Secretary for Consular Affairs and, if the decision is adverse to him or her, the notification shall state the reasons for the decision and inform him or her of the right to appeal the decision to the Board of Appellate Review (Part 7 of this Chapter) within 60 days after receipt of notice of the adverse decision. If no appeal is made within 60 days, the decision will be considered final and not subject to further administrative review.

§§ 51.90–51.105 [Revoked]

(Sec. 4, 63 Stat. 111, as amended, 22 U.S.C. 2658; Sec. 104, 66 Stat. 174, 8 U.S.C. 1104.)

Dated: June 29, 1979.

For the Secretary of State.

Edward G. Misey,

Chairman, Board of Appellate Review.

[FR Doc. 79-20919 Filed 7-5-79; 8:45 am]

BILLING CODE 4700-10-M

DEPARTMENT OF THE TREASURY

Internal Revenue Service

[26 CFR Part 1]

[LR-270-76]

Capital Loss Carryovers for Regulated Investment Companies

AGENCY: Internal Revenue Service, Treasury.

ACTION: Notice of proposed rulemaking.

SUMMARY: This document contains proposed regulations relating to the allowable period to which a regulated investment company must carry forward a net capital loss. Changes to the applicable tax law were made by the Tax Reform Act of 1976. The regulations would provide the public with the

guidance needed to comply with that Act and would affect regulated investment companies.

DATES: Written comments and requests for a public hearing must be delivered or mailed by September 4, 1979. The amendment pertaining to the extension of the capital loss carryover period for regulated investment companies is proposed to be effective for taxable years ending after December 31, 1969. The amendment pertaining to the term "capital gain net income" is effective for taxable years beginning after December 31, 1976.

ADDRESS: Send comments and requests for a public hearing to: Commissioner of Internal Revenue, Attention: CC:LR:T (LR-270-76), Washington, D.C. 20224.

FOR FURTHER INFORMATON CONTACT: Kent J. Schreiner of the Legislation and Regulations Division, Office of the Chief Counsel, Internal Revenue Service, 1111 Constitution Avenue, N.W., Washington, D.C. 20224 (Attention: CC:LR:T, 202-566-3803).

SUPPLEMENTARY INFORMATION:

Background

This document contains proposed amendments to the Income Tax Regulations (26 CFR Part 1) under section 1212 of the Internal Revenue Code of 1954. These amendments are proposed to conform the regulations to sections 1403 and 1901 (b) (33) (O) of the Tax Reform Act of 1976 (90 Stat. 1733, 1802) and are to be issued under the authority contained in section 7805 of the Internal Revenue Code of 1954 (68A Stat. 917; 26 U.S.C. 7805).

Explanation of Provisions

The Tax Reform Act of 1976 amends section 1212(a) of the Internal Revenue Code by increasing the 5-year carryover period allowed for net capital losses sustained by corporations to 8 years for regulated investment companies, as defined in section 851. The proposed regulations make it clear that regulated investment companies have a maximum of 9 years in which to deduct their capital losses. The specified 9 years include the year the loss was sustained as well as any years to which the loss must be carried back. The loss may not be carried back to a year in which the company qualified as a regulated investment company. In addition, the 9 years must be reduced (by a maximum of 3 years) for each year, of the 8 years following the loss year, that the company failed to maintain its status as a regulated investment company. Finally, the capital loss may not be carried over to the sixth, seventh, or eighth year following the year of the loss unless the corporation qualifies as a regulated investment company in such year.

The Tax Reform Act substituted the term "capital gain net income" for the term "net capital gain". The proposed amendments conform the regulations under section 1212 to this change in terminology.

Comments and Requests for a Public Hearing

Before adopting these proposed regulations, consideration will be given to any written comments that are submitted (preferably six copies) to the Commissioner of Internal Revenue. All comments will be available for public inspection and copying. A public hearing will be held upon written request to the Commissioner by any person who has submitted written comments. If a public hearing is held, notice of the time and place will be published in the Federal Register.

Drafting Information

The principal author of these proposed regulations is Kent J. Schreiner of the Legislation and Regulations Division of the Office of Chief Counsel, Internal Revenue Service. However, personnel from other offices of the Internal Revenue Service and Treasury Department participated in developing these regulations, both on matters of substance and style.

Proposed Amendments to the Regulations

The proposed amendments to 26 CFR Part 1 are as follows:

§ 1.1212 [Deleted]

Paragraph 1. Section 1.1212 and the historical note are deleted.

§ 1.1212-1 [Amended]

Par. 2. Paragraph (a) of § 1.1212-1 is amended by striking out "net capital gain(s)" each place it appears in subparagraphs (2)(i) and (3) (ii) and (iii) and inserting in lieu thereof "capital gain net income (net capital gain(s) for taxable years beginning before January 1, 1977)", and by adding subdivision (g) to subparagraph (3)(iii). The added provision reads as follows:

§ 1.1212-1 Capital loss carryovers and carrybacks.

(a) *Corporations; other taxpayers for taxable years beginning before January 1, 1964.* * * *

(3) *Regular net capital loss sustained by a corporation for taxable years beginning after December 31, 1969.* * * *

(iii) *Special rules.* * * *

(g) A regulated investment company (as defined in section 851) sustaining a net capital loss shall carry over that loss to each of the 8 taxable years succeeding the loss year. However, the 8-year period prescribed in the preceding sentence shall be reduced (but not to less than 5 years) by the sum of (1) the number of taxable years to which the net capital loss must be carried back pursuant to subdivision (i)(a) of this subparagraph (as limited by subdivision (iii)(e) of this subparagraph) and (2) the number of taxable years, of the 8 taxable years succeeding the loss year, that the corporation failed to qualify as a regulated investment company as defined in section 851. This subdivision shall not extend the carryover period prescribed in subdivision (i)(b) of this subparagraph to a year in which a corporation is not a regulated investment company as defined in section 851.

* * * * *

Jerome Kurtz,
Commissioner of Internal Revenue.

[FR Doc. 79-20944 Filed 7-5-79; 8:45 am]
BILLING CODE 4830-01-M

[26 CFR Parts 1 and 31]

[LR-201-78]

Earned Income Credit

AGENCY: Internal Revenue Service, Treasury.

ACTION: Notice of proposed rulemaking.

SUMMARY: This document contains proposed Income Tax Regulations and Employment Tax Regulations relating to the earned income credit. Changes to the applicable tax law were made by the Revenue Act of 1978. The regulations would provide necessary guidance to the public for compliance with the law.

DATES: Written comments and requests for a public hearing must be delivered or mailed by September 4, 1979. The amendments are proposed to be effective for taxable years beginning after December 31, 1978.

ADDRESS: Send comments and requests for a public hearing to: Commissioner of Internal Revenue, Attention: CC:LR:T (LR-201-78), Washington, D.C. 20224.

FOR FURTHER INFORMATION CONTACT: Barbara B. Coughlin of the Legislation and Regulations Division, Office of the Chief Counsel, Internal Revenue Service, 1111 Constitution Ave., N.W., Washington, D.C. 20224 (Attention: CC:LR:T) (202-566-6618).

SUPPLEMENTARY INFORMATION:

Background

This document contains proposed amendments to the Income Tax Regulations (26 CFR Part 1) under sections 43 and 6012 of the Internal Revenue Code of 1954 and to the Employment Tax Regulations (26 CFR Part 31) under section 6051 of the Code. These amendments are proposed to conform the regulations to sections 103, 104, and 105 (a), (c), and (d) of the Revenue Act of 1978 (92 Stat. 2771). The amendments are to be issued under the authority contained in section 7805 of the Internal Revenue Code of 1954 (68A Stat. 917; 26 U.S.C. 7805). The proposed regulations add a new § 1.43–2 to reflect the rules for the earned income credit applicable to taxable years beginning after December 31, 1978.

Allowance of Credit

The proposed regulations provide rules reflecting the changes in the earned income credit as allowed by section 43. In the case of an individual eligible for the earned income credit, the credit is 10 percent of the first $5,000 of the individual's earned income for the taxable year. Prior to January 1, 1979, the credit allowed by section 43 was 10 percent of the first $4,000 of the individual's earned income for the taxable year.

Limitation on Amount of Credit

The proposed regulations reflect the new rules for the limitation on the amount of the earned income credit. The amount of credit must not exceed the excess, if any, of $500 over 12.5 percent of that amount of adjusted gross income (or, if greater, earned income) of the taxpayer as exceeds $6,000 for the taxable year. Prior to January 1, 1979, the amount of credit allowed a taxpayer for a taxable year was reduced by an amount equal to 10 percent of so much of adjusted gross income (or, if greater, earned income) of the taxpayer for the taxable as exceeded $4,000.

Eligible Individual

The proposed regulations provide rules reflecting the change in definition of the term "eligible individual." An eligible individual is either (1) an individual who is married, who is entitled to an exemption deduction for a child (within the meaning of section 151(e)(3)), and who has the same principal place of abode in the United States as the child; (2) an individual who is a surviving spouse (as determined under section 2(a)) whose principal place of abode is in the United State; or (3) an individual who is a head of household (as determined under section 2(b) without regard to paragraphs (b)(1)(A)(ii) and (B)) whose principal place of abode is in the United States. To qualify as an eligible individual, the individual must not have been entitled to exclude any gross income under section 911 or 931.

Earned Income

The proposed regulations provide rules reflecting the change in definition of the term "earned income." Earned income means wages, salaries, tips, other employee compensation, and net earnings from self-employment (within the meaning of section 1402(a). The determination of earned income is subject to certain special rules.

Miscellaneous

The proposed regulations provide rules for the coordination of the earned income credit with the advance payment of the earned income credit by employers under section 3507. These proposed regulations also would amend § 1.6012–1(a)(2) to conform these regulations to section 6012, as amended, which requires individuals who receive advance payments of earned income credit to make a return of income. The proposed regulations would also amend § 31.6051–1 to conform the regulations to section 6051, as amended, which requires employers to furnish on a written statement (Form W–2) to employees the total amount of advance payments of earned income credit paid to the employee under section 3507 for the calendar year.

Comments and Requests for a Public Hearing

Before adopting these proposed regulations, consideration will be given to any written comments that are submitted (preferably six copies) to the Commissioner of Internal Revenue. All comments will be available for public inspection and copying. A public hearing will be held upon written request to the Commissioner by any person who has submitted written comments. If a public hearing is held, notice of the time and place will be published in the **Federal Register**.

Drafting Information

The principal author of these proposed regulations is Barbara B. Coughlin of the Legislation and Regulations Division, Office of the Chief Counsel, Internal Revenue Service. However, personnel from other offices of the Internal Revenue Service and Treasury Department participated in developing the regulations, both on matters of substance and style.

Proposed Amendments to the Regulations

The proposed amendments to 26 CFR Parts 1 and 31 are as follows:

Income Tax Regulations

Paragraph 1. Section 1.43–1 is amended by revising the heading and paragraphs (a) and (e). These revised provisions read as follows:

§ 1.43–1 Earned income credit for taxable years beginning before January 1, 1979.

(a) *(Allowance of credit.* For taxable years beginning before January 1, 1979 (and after December 31, 1974), subject to the limitations of paragraph (b) of this section, an eligible individual (as defined in paragraphs (c) (1) and (2) of this section) is allowed as a credit against the tax imposed by chapter 1 for the taxable year, an amount equal to 10 percent of the first $4,000 of earned income (as defined in paragraph (c)(3) of this section) for the taxable year. For later taxable years beginning after December 31, 1978, see § 1.43–2.

* * * * *

(e) *Effective dates.* The rules of this section apply only for taxable years beginning both after December 31, 1974, and before January 1, 1979. For later taxable years beginning after December 31, 1978, see § 1.43–2.

Par. 2. A new § 1.43–2 is added immediately after § 1.43–1. This new section reads as follows:

§ 1.43–2 Earned income credit for taxable years beginning after December 31, 1978.

(a) *Allowance of credit.* For taxable years beginning after December 31, 1978, subject to the limitations of paragraph (b) of this section, an eligible individual (as defined in paragraph (c)(1) of this section) is allowed as a credit against the tax imposed by subtitle A of the Code for the taxable year, an amount equal to 10 percent of the first $5,000 of earned income (as defined in paragraph (c)(2) of this section) for the taxable year. For earlier taxable years beginning before January 1, 1979, see § 1.43–1.

(b) *Limitations*—(1) *Amount of credit.* The amount of the credit allowed by section 43 and paragraph (a) of this section for the taxable year must not exceed the excess, if any, of $500 over 12.5 percent of that amount of the adjusted gross income (or, if greater, the earned income) of the taxpayer for the taxable year which exceeds $6,000. For the meaning of the term "earned income," see paragraph (c)(2) of this section. Adjusted gross income is determined under section 62 and the regulations thereunder. If an individual has adjusted gross income or earned

income of $10,000 or more, the individual is not entitled to the credit.

(2) *Married individuals.* No credit is allowed by section 43 and paragraph (a) of this section in the case of an eligible individual who is married (within the meaning of section 143 and the regulations thereunder) unless the individual and spouse file a single return jointly (a joint return) for the taxable year (see section 6013 and the regulations thereunder relating to joint returns of income tax by husband and wife). The requirements of the preceding sentence do not apply to an eligible individual who is not considered as married under section 143(b) and the regulations thereunder (relating to certain married individuals living apart).

(3) *Length of taxable year.* No credit is allowed by section 43 and paragraph (a) of this section in the case of a taxable year covering a period of less than 12 months. However, the rule of the preceding sentence does not apply to a taxable year closed by reason of the death of the eligible individual.

(c) *Definitions*—(1) *Eligible individual.* For purposes of this section, an eligible individual is an individual who meets the following requirements of this paragraph (c)(1).

(i) For the taxable year the individual must meet any one of the following three requirements set forth, respectively, in (A), (B), and (C) of this subdivision (i).

(A) The individual must be married (within the meaning of section 143 and the regulations thereunder) and be entitled to a deduction under section 151 for a child (within the meaning of section 151(e)(3) and the regulations thereunder). The child must have the same principal place of abode as the individual and that principal place of abode must be in the United States for the entire taxable year.

(B) The individual must qualify as a surviving spouse (as determined under section 2(a) and the regulations thereunder). Thus, the spouse of the individual must have died within the period of the 2 taxable years immediately preceding the individual's taxable year. Also, the individual must have furnished over half the cost of maintaining as the individual's home a household in the United States for the entire taxable year which is the principal place of abode of a child of the individual who qualifies as a dependent for whom the individual is entitled to a deduction under section 151.

(C) The individual must qualify as a head of household (as determined under section 2(b) and the regulations thereunder but without regard to section 2(b)(1) (A)(ii) and (B) and the regulations thereunder). Thus, the individual cannot be married as of the close of the taxable year and also cannot qualify as a surviving spouse under section 2(a). Also, the individual must have furnished over half the cost of maintaining as the individual's home a household in the United States for the entire taxable year which is the principal place of abode of a child or descendant of the individual who is unmarried or who qualifies as a dependent for whom the individual is entitled to a deduction under section 151.

(ii) For the entire taxable year, the individual must not be entitled to exclude any amount from gross income under section 911 (relating to earned income by individuals in certain camps outside the United States) or section 931 and the regulations thereunder (relating to income from sources within the possessions of the United States).

(iii) The rules of this paragraph (c)(1) are illustrated by the following examples:

Example (1). A, who is married and a member of the United States Armed Forces, maintains his household outside the United States for part of the taxable year. A is not an eligible individual. However, if A maintains his household inside the United States for the entire taxable year and is only temporarily absent therefrom by reason of military service and if the household is his principal place of abode and the principal place of abode of his child who receives over half of his support from the taxpayer for the calendar year in which the taxable year of the taxpayer begins and who either has less than $1,000 of gross income for the calendar year in which the individual's taxable year begins or who has not attained the age of 19 at the close of the calendar year in which the individual's taxable year begins or is a student, then the individual is an eligible individual if he meets the requirements of subdivision (ii) of this paragraph.

Example (2). B's wife died in 1975 and B has not remarried. For his entire taxable year beginning January 1, 1979, B maintains his household inside the United States. The household is, for the entire taxable year, B's principal place of abode and the principal place of abode of B's unmarried grandchild whose natural parents are deceased. Thus B qualifies as a head of household (as determined under section 2(b) without regard to subparagraphs (A)(ii) and (B) of section 2(b)(1)). In these circumstances, regardless of whether B provides sufficient support to claim the grandchild as a dependent, B is an eligible individual if he meets the requirements of subdivision (ii) of this paragraph.

Example (3). C is married and maintains his household inside the United States for the entire taxable year. The household is his principal place of abode and, for the entire year, is also the principal place of abode of a 12 year old child whose natural parents are deceased and who is placed with C by a State agency to provide the child with foster care. C receives compensation from the State agency to cover all of the cost of maintaining the child in his home. The child is in C's care and is cared for as C's own child. In these circumstances, the child is C's foster child, but C is not able to claim the child as a dependent since C did not provide half the child's support for the year. C is not eligible for the earned income credit.

Example (4). Assume the same facts as in example *(3)* except that C receives no compensation from the State agency, and C provides over half the child's support and is able to claim the child as a dependent. C is an eligible individual if he meets the requirements of subdivision (ii) of this paragraph.

Example (5). D's husband died in 1974 and D has not remarried. For the entire taxable year beginning January 1, 1979, D maintains her household inside the United States. The household is D's principal place of abode and, for the entire taxable year, is also the principal place of abode of D's unmarried son. D cares for her son in all respects except that her parents provide over half of the son's support. D qualifies as a head of household (as determined under section 2(b) without regard to subparagraph (A)(ii) and (B) of section 2(b)(1)). D is an eligible individual if D meets the requirements of subdivision (ii) of this paragraph.

Example (6). Assume the same facts as in example *(5)* except that D is married. Since D cannot qualify as a head of household, and D's son cannot be claimed as D's dependent, D is not an eligible individual.

(2) *Earned income.* For purposes of this section, earned income means—

(i) Wages, salaries, tips, other employee compensation, and

(ii) Net earnings from self-employment (within the meaning of section 1402(a) and the regulations thereunder).

Earned income is computed without regard to any community property laws which may otherwise be applicable. Earned income is reduced by any net loss in earnings from self-employment. Earned income does not include amounts received as a pension, an annuity, or workmen's compensation, or an amount to which section 871(a) and the regulations thereunder apply (relating to income of nonresident alien individuals not connected with United States business).

(d) *Examples.* The application of this section is illustrated by the following examples. For purposes of these examples, assume that the eligible individual does not receive a pension, an annuity, or an amount to which section 871(a), 911, or 931 applies.

Example (1). A and B (married individuals) maintain a household inside the United States which is their principal place of abode and the principal place of abode of their two children who are 12 and 14 years old. A and B are calendar year taxpayers and, for 1979,

they file a joint return. A and B have a total earned income of $7,600 (computed without regard to any community property laws) and have adjusted gross income of less than $7,600. The earned income credit of $300 is determined as follows:

Basic credit (10 percent of $5,000 under paragraph (a) of this Section)			$500
Initial limitation amount		$500	
Less: Reduction under paragraph (b)(1) of this section:			
Earned income for taxable year	$7,600		
Less	6,000		
Excess over $6,000	1,600		
12½ percent of excess ($1,600)		200	
Maximum credit (if less than basic credit)			300

Example (2). Assume the same facts as in example (1) except that A and B have earned income of $4,000 and adjusted gross income of $7,000. The earned income credit of $375 is determined as follows:

Basic credit (10 percent of $4,000 under paragraph (a) of this section)			$400
Initial limitation amount		$500	
Less: Reduction under paragraph (b)(1) of this section:			
Adjusted gross income for taxable year	$7,000		
Less	6,000		
Excess over $6,000	1,000		
12½ percent of excess ($1,000)		125	
Maximum credit (if less than basic credit)			375

(e) *Coordination of credit with advance payments*—(1) *Recapture of excess advance payments.* If any advance payment of earned income credit under section 3507 is made to an individual by an employer during any calendar year, then the total amount of these advance payments to the individual in that calendar year is treated as an additional amount of tax imposed upon the individual on the tax return for the individual's last taxable year beginning in that calendar year.

(2) *Reconciliation of payments advanced and credit allowed.* Any additional amount of tax under paragraph (e)(1) of this section is not treated as a tax imposed by chapter 1 of the Code for purposes of determining the amount of any credit (other than the earned income credit) allowable under subpart A, part IV, subchapter A, chapter 1 of the Code.

Par. 3. Paragraph (a)(2) of § 1.6012-1 is amended by adding a new subdivision (vii) immediately after subdivision (vi). This new subdivision reads as follows:

§ 1.6012-1 Individuals required to make returns of income.

(a) *Individual citizen or resident.* * * *

(2) * * *

(vii) For taxable years beginning after December 31, 1978, an individual who receives payments during the calendar year in which the taxable year begins under section 3507 (relating to advance payment of earned income credit) must file an income tax return.

* * * * *

Employment Tax Regulations

§ 31.6051-1 [Amended]

Par. 4. Section 31.6051-1 is amended as follows:

1. Paragraph (a)(1)(i) is amended by striking out "and" at the end of inferior subdivision (*f*), by striking out the period at the end of inferior subdivision (*g*) and inserting in its place ", and" and by adding a new inferior subdivision (*h*) immediately after inferior subdivision (*g*). This new inferior subdivision (*h*) reads as set forth below.

2. Paragraph (b)(1) is amended by striking out "and" at the end of subdivision (iv), by striking out the period at the end of subdivision (v) and inserting in its place ", and" and by adding a new subdivision (vi) immediately after subdivision (v). This new subdivision (vi) reads as set forth below.

§ 31.6051-1 Statement for employees.

(a) *Requirement if wages are subject to withholding of income tax*—(1) *General rule.* * * *

(i) * * *

(*h*) The total amount paid to the employee under section 3507 (relating to advance payment of earned income credit).

* * * * *

(b) *Requirement if wages are not subject to withholding of income tax*—(1) *General rule.* * * *

(vi) The total amount paid to the employee under section 3507 (relating to advance payment of earned income credit).

* * * * *

Jerome Kurtz,

Commissioner of Internal Revenue.

[FR Doc. 79-20943 Filed 7-5-79; 8:45 am]

BILLING CODE 4830-01-M

ENVIRONMENTAL PROTECTION AGENCY

[40 CFR Part 52]

[FRL 1264-5]

Approval and Promulgation of Implementation Plans; Arizona State Implementation Plan Revision and Metropolitan Pima County Nonattainment Area Plan

AGENCY: Environmental Protection Agency.

ACTION: Notice of Proposed Rulemaking.

SUMMARY: Revisions to the Metropolitan Pima County portion of the Arizona State Implementation Plan (SIP) have been submitted to the Environmental Protection Agency (EPA) by the Governor's designee. The intended effect of the revisions is to meet the requirements of Part D of the Clean Air Act, as amended in 1977, "Plan Requirements for Nonattainment Areas." This notice provides a description of the proposed SIP revisions, summarizes the Part D requirements, compares the revisions to these requirements, identifies major issues in the proposed revisions, and suggests corrections. On April 4, 1979 (44 FR 20372) EPA published a General Preamble for Proposed Rulemaking on Aprroval of Plan Revisions for Nonattainment Areas. The general preamble supplements this proposal, by identifying the major considerations that will guide EPA's evaluation of the submittal. EPA's evaluation of the transportation portion of the SIP will also be guided by the EPA-Department of Transportation (DOT) Transportation Planning Guidelines and the SIP-Transportation Checklist. The EPA-DOT Guidelines describe the acceptable process elements that satisfy Clean Air Act requirements for the transportation portion of an approvable SIP. The EPA invites public comments on these revisions, the identified issues, the suggested corrections, and whether the revisions should be approved or disapproved, especially with respect to the requirements of Part D of the Clean Air Act.

DATES: Comments may be submitted up to August 6, 1979.

ADDRESSES: Comments may be sent to: Regional Administrator, Attn: Air & Hazardous Materials Division, Air Technical Branch, Regulatory Section (A-4), Environmental Protection Agency, Region IX, 215 Fremont Street, San Francisco, CA 94105.

Copies of the Proposed Revision/Nonattainment Area Plan and EPA's

associated Evaluation Report are contained in document file NAP–AZ–2 and are available for public inspection during normal business hours at the EPA Region IX Library at the above address and at the following locations:

Pima Association of Governments, 405 Transamerica Building, Tucson, AZ 85701.
Arizona Department of Health Services, Bureau of Air Pollution Control, 1740 West Adams Street, Phoenix, AZ 85007.
Public Information Reference Unit, Room 2922 (EPA Library), 401 "M" Street, S.W., Washington, D.C. 20460.

FOR FURTHER INFORMATION CONTACT: Douglas Grano, Chief, Regulatory Section, Air Technical Branch, Air & Hazardous Materials Division, Environmental Protection Agency, Region IX, (415) 556–2938.

SUPPLEMENTARY INFORMATION:

Background

New provisions of the Clean Air Act, enacted in August 1977, Public Law No. 95–95, require states to revise their SIPs for all areas that do not attain the National Ambient Air Quality Standards (NAAQS). The amendments required each state to submit to the Administrator a list of the NAAQS attainment status for all areas within the state. The Administrator promulgated these lists, with certain modifications, on March 3, 1978 (43 FR 8962). State and local governments were required to develop, adopt, and submit to EPA revisions to their SIP, for nonattainment areas, by January 1, 1979 which meet the requirements of Part D of the Clean Air Act and which provide for attainment of the NAAQS as expeditiously as practicable.

EPA had promulgated the designations for Arizona listed in the March 3, 1978 Federal Register notice since the State did not submit its attainment status designations in time to comply with the requirements of Section 107(d) of the Clean Air Act. The March 3, 1978 notice designated Pima County as nonattainment for particulate matter, photochemical oxidants (ozone), carbon monoxide, and sulfur dioxide. The State subsequently submitted designations on August 15, 1978 and, as a result, two Federal Register notices have been published amending the attainment status designations in Arizona.

On March 19, 1979 (44 FR 16388), the carbon monoxide and photochemical oxidants (ozone) nonattainment area in Pima County was redesignated from a countywide basis to the Tucson Air Corridor (defined by given geographical coordinates).

On April 10, 1979 (44 FR 21261), Pima County's previous countywide nonattainment designation for particulate matter was revised to include only the Tucson Air Corridor and one township area surrounding Ajo. Also, on April 10, 1979, Pima County's previous countywide nonattainment designation for sulfur dioxide was changed to five township areas surrounding Ajo.

Further, on May 21, 1979, the State requested that EPA redesignate Metropolitan Pima County from nonattainment for photochemical oxidants to attainment for ozone. The requested redesignation reflects the revision of the photochemical oxidant national ambient air quality standard by EPA on February 8, 1979 (44 FR 8202) and shows that no violations of the revised standard were measured or statistically expected during the last three years (1976–1978). EPA is proposing to approve the redesignation through a separate proposed rulemaking notice.

If EPA approves this redesignation in the subsequent final rulemaking notice, the Clean Air Act, Part D requirements, for ozone would not be applicable to Metropolitan Pima County and those portions of the nonattainment area plan concerning ozone would no longer be required. However, since the Part D requirements remain in effect until a final rulemaking notice is published approving the redesignation, EPA is continuing the review of the oxidant (ozone) plan in this notice. This action is also necessary in order to avoid any possible delay in our final rulemaking action on the plan which might otherwise occur if the redesignation request were disapproved after consideration of public comments. Thus, this notice addresses the oxidant (ozone) portions of the Metropolitan Pima County plan with respect to the requirements of Part D of the Clean Air Act, even though the area might be redesignated attainment in the near future.

Description of Proposed SIP Revisions

On March 20 and 27, 1979, the Director of the Arizona Department of Health Services (ADHS), the Governor's official designee, submitted to EPA, as revisions to the Arizona SIP, portions of the Nonattainment Area Plan for Metropolitan Pima County for photochemical oxidants (ozone), carbon monoxide, and total suspended particulates. Preparation of the proposed SIP revisions was coordinated by the Pima Association of Governments, which was designated by the Governor as the air quality planning organization for the Pima County nonattainment areas. The nonattainment area plan for Pima County consists of the following major components: A basic description of Federal nonattainment area plan requirements and of the Metropolitan Pima County (Tucson Metropolitan Area) nonattainment planning area; a discussion of the planning process including: How the plan was prepared, the agencies involved in the process, public participation, intergovernmental coordination, and regional planning consistency; a discussion defining those pollutants that exceed the NAAQS, specifying by pollutant the measured violations and the temporal and spatial distribution; an examination of air quality trends through the use of growth projections and emission inventories, and a determination of the level of control needed to attain the standards; a discussion of alternative air quality control measures that examines feasibility, costs, technical effectiveness, enforcement aspects, future land use design, and growth management; a discussion of the specific strategies for particulate matter, carbon monoxide, and photochemical oxidants (ozone) that describes the implementation mechanisms, schedules for reasonable further progress, annual reporting provisions, and continuing planning requirements, as well as the environmental, social and economic impacts for the strategies; and a summary of the costs of implementing and enforcing the plan.

The plan proposes to attain the carbon monoxide standard and the 0.08 ppm photochemical oxidants (ozone) standard by 1982. The control measures to be used include:

—new source review programs run by both ADHS and the Pima County Air Quality Control District (AQCD);

—existing regulations controlling volatile organic compound (VOC) emissions from existing stationary sources;

—the implementation of new vapor recovery regulations controlling VOC emissions from tank trucks, bulk gasoline terminals, and service stations;

—the State automobile inspection and maintenance program;

—the implementation of new car emission standards as scheduled by EPA;

—transportation system improvements, including computerized traffic flow control and increased support for public transit and carpooling; and

—the use of ongoing regional and land use planning programs.

The plan proposes to attain the primary particulate standard by 1982 using control measures which include:

—new source review programs run by both ADHS and the Pima County AQCD;

—existing regulations controlling particulate matter emissions from existing traditional sources; and

—programs to develop, adopt and implement controls for nontraditional sources, including construction dust control, street sweeping, and the paving of unpaved roads and road shoulders.

Criteria for Approval

The following list summarizes the basic requirements for Nonattainment Area Plans.

1. An accurate inventory of existing emissions.
2. A provision for expeditious attainment of the standards.
3. A determination of the level of control needed to attain by 1982.
4. Adoption in legally enforceable form of all measures necessary to provide for attainment or, where adoption by 1979 is not possible, a schedule for development, adoption, submittal, and implementation of these measures.
5. Emission reduction estimates for each adopted control measure.
6. Provisions for reasonable further progress as defined in Section 171 of the Clean Air Act.
7. An identification of an emissions growth increment.
8. Provisions for annual reporting with respect to items (4) and (6) above.
9. A permit program for major new or modified sources consistent with Section 173 of the Clean Air Act.
10. An identification of and commitment to the resources necessary to carry out the plan.
11. Evidence of public, local government, and state involvement and consultation.
12. Evidence that the proposed SIP revisions were adopted by the state after reasonable notice and public hearing.

Issues

1. Emission Inventory

The plan includes a reasonably accurate, comprehensive and current emission inventory for hydrocarbons (HC), carbon monoxide (CO), and particulate matter, identifying emission source categories and present and future emissions in both Pima County and the Tucson Metropolitan Area.

Stationary mobile, and area source estimates which comprise the inventory are primarily based on the latest emission factors cited in EPA's "Compilation of Air Pollution Emission Factors" (AP-42), the "Emission Inventory Guidance Document," the *Guide for Compiling a Comprehensive Emission Inventory* (APTD-1135), and the Midwest Research Institute's "Development of Emission Factors for Fugitive Dust Sources" (EPA-450/3-74-037, June 1974) or derived from surveys or transportation studies.

The Tucson Metropolitan Area is a small urban area within the Tucson Air Corridor, which occupies the eastern third of Pima County. On March 19, 1979 (44 FR 16388) and April 10, 1979 (44 FR 21261), the nonattainment areas for Pima County which include the Tucson Metropolitan Area were reduced in size at the State's request from a countywide basis to the Tucson Air Corridor, whose boundary closely follows the mountain ranges around Tucson. The Metropolitan Pima County nonattainment area plan contains a total suspended particulate (TSP) inventory for both countywide emissions and those that occur in the Tucson Metropolitan Area. Even though both TSP inventories are reasonably accurate, comprehensive, and current, neither of these inventories specifically represents the newly designated Tucson Air Corridor nonattainment area. As violations of the TSP standard have occurred in the boundary area outside the Metropolitan area (yet within the Tucson Air Corridor), a modified TSP inventory is needed to serve as a basis for control strategy development for that boundary area.

Since the HC and CO inventories included in the plan are for the same areas as TSP, future emission inventory updates need to reflect specifically the new nonattainment area's emissions. However, the lack of measured or predicted violations for CO or oxidants (ozone) outside the Tucson Metropolitan Area make the partial CO and HC inventories adequate for control strategy purposes.

Future updates in accordance with Section 172(b)(4) should include a specific inventory for the Tucson Air Corridor which utilizes any newly developed TSP, HC and CO emission factors.

2. Attainment Provision

The plan for CO, oxidants (ozone) and TSP addresses only the Tucson Metropolitan Area. This is an acceptable planning area for CO and oxidants (oxone) since all measured and predicted violations of the national standards for these pollutants occur within the Tucson Metropolitan Area.

Ozone

The plan addresses the national standard for photochemical oxidants of 0.08 ppm, which was superseded on February 8, 1979 (44 FR 8202) by the promulgation of a revised standard for ozone of 0.12 ppm. On May 21, 1979, the State requested that EPA redesignate Metropolitan Pima County from nonattainment for photochemical oxidants to attainment for ozone. A public comment period on this proposal will be provided for in a separate Federal Register notice. If EPA approves this redesignation, the Clean Air Act Part D requirements for ozone would not be applicable.

The present plan indicates attainment of the oxidant (ozone) standard within the Tucson Metropolitan Area by 1982 through a control strategy consisting of vehicular inspection/maintenance, computerized traffic signal systems, carpooling/vanpooling, and mass transit improvements.

Carbon Monoxide

The plan provides for the attainment of the carbon monoxide standards within the Tucson Metropolitan Area by 1982 through a control strategy consisting of vehicular inspection/maintenance, computerized traffic signal systems, carpooling/vanpooling and mass transit improvements.

Particulate Matter

This plan provides for attainment of the total suspended particulate primary standard in the Tucson Metropolitan Area portion of the nonattainment area through a commitment to an emissions reduction schedule from 1979 to the attainment year of 1982. For purposes of this demonstration, the more conservative annual standard is used since greater emission reductions are necessary to demonstrate attainment using the annual standards than would be required using the 24-hour standard.

The plan in the Tucson Metropolitan Area commits to control programs for nontraditional sources in the urban area, specifically affecting unpaved roads, roads with unpaved shoulders, and construction sites. In addition, the plan describes potentially more cost-effective innovative measures which would be investigated concurrently with implementation of these control programs. Additional reasonable tactics, adopted following completion of these scheduled investigations, must be submitted to EPA as an SIP revision along with resource and policy board commitments to provide for attainment as expeditiously as practicable.

The Clean Air Act requires that the secondary TSP standard be attained both within a reasonable time and as expeditiously as practicable. The plan in the Tucson Metropolitan Area includes the description of a schedule for attainment of the secondary standard for total suspended particulates including the requisite emission reductions to be achieved by paving shoulders and roads between 1982 and 1990 for attainment and through 2000 to maintain standards. The schedule description does not constitute a complete nonattainment plan in that resource commitments are not made. Therefore, the State should request an extension of up to 18 months for developing and submitting a plan fulfilling Part D requirements to attain the secondary standard.

The plan does not demonstrate attainment in the boundary area (that area inside the Tucson Air Corridor nonattainment area but outside of the Tucson Metropolitan Area) where TSP air quality standard violations have been recorded. Attainment must be demonstrated in a revision to the current submittal for the entire Tucson Air Corridor nonattainment area because of ambient TSP violations both within and outside the Tucson Metropolitan Area.

3. Level of Control/Modeling

Ozone

Linear rollback modeling was used to calculate the amount of reduction needed in non-methane hydrocarbons to meet the 0.08 ppm oxidant standard. The methodology and selection of input data meets minimum Federal requirements for oxidant (ozone) modeling.

Carbon Monoxide

The analysis of future year carbon monoxide concentrations for the Pima Country Nonattainment Area includes the use of an empirical model which predicts carbon monoxide concentrations at a worst case site in metropolitan Tucson. The assumptions used to derive the model and the attainment-year parameters used in the model are reasonable. The analysis appears to provide an adequate assessment of the control needed to attain the carbon monoxide Federal standards. EPA finds the analysis to be consistent with current EPA guidelines.

Particulate

The plan uses a model which combines areawide rollback with a worst-case envelope approach to predict ambient concentrations in the Tucson Metropolitan Area. The Pima County TSP model is more stringent than the minimally acceptable rollback model and is therefore acceptable for this SIP revision. EPA recommends that the annual update reflect appropriate additions to the input data of the Pima County TSP model. Each year additional data points need to be plotted to validate the model and submitted with the annual updates. Any points plotted above the worst-case line will indicate a need to reevaluate the effectiveness of the control strategy for the Tucson Metropolitan Area.

4. Legally Adopted Measures/Schedules

Ozone

The SIP revision which addresses the 0.08 ppm oxidant standard does not indicate that all necessary control measures have been adopted at the State and/or local level, as required by Sections 172(b)(2), 172(b)(8), and 172(b)(10). Specifically, the plan fails to show adoption of legally enforceable regulations that provide for the application of all reasonably available control technology (RACT) on stationary sources.

Even though the plan demonstrates attainment of the oxidant (ozone) standard by 1982 without all of the RACT regulations, EPA policy still requires RACT in this situation. Rollback modeling is less comprehensive and less accurate than photochemical dispersion modeling. Therefore, to insure the adequacy of the control strategy demonstration and to insure attainment as expeditiously as practicable, the plan must include adopted, legally enforceable regulations reflecting reasonably available control technology for at least all major stationary source (100 tons/year potential) categories for which EPA had published a Control Techniques Guideline (CTG) document by January 1978.

However, if EPA approves the State's redesignation request, these requirements would not be applicable.

Carbon Monoxide

The plan indicates that sufficient control measures have been adopted at the State or local level as required by Sections 172(b)(2), 172(b)(8), and 172(b)(10) to demonstrate attainment. With respect to the mass transit and carpooling improvements contained in the control strategy, however, the plan should specify schedules for implementation of specific improvements. The State has an existing inspection/maintenance program which is the primary control tactic for the control of carbon monoxide emissions. The State submitted additional amended regulations for its inspection/maintenance program on March 21, 1979 as an SIP revision. This revision strengthens the program by increasing the stringency factor for the motor vehicle emissions inspection and will be the subject of a separate Notice of Proposed Rulemaking.

Particulate

The Plan indicates that certain State regulations do not provide RACT for certain sources within the nonattainment area. If the State agrees with this contention, then it should ensure that regulations providing RACT are adopted by the State or local agency.

In addition to the State and County having provided commitments for nontraditional source investigations and programs, the plan includes written evidence that other local governments have committed to necessary scheduled studies, pilot projects, and control provisions for nontraditional emission sources of fugitive dust in the Tucson Metropolitan Area. Commitments need also be made to implement control measures found to be reasonable and necessary through the above mentioned studies and projects in the remainder of the nonattainment area.

5. Emission Reduction Estimates

Acceptable techniques were used for deriving the area, stationary and inspection/maintenance emission reduction estimates. It is recognized that reduction estimates may change as measures are more fully analyzed and implemented, particularly the nontraditional tactics. As such estimates change, an annual report, and biannual report on the transportation measures, will be required to insure that the plan remains adequate to provide for attainment and reasonable further progress.

6. Reasonable Further Progress

The showing of planned emission reductions for hydrocarbons (ozone precursor) and carbon monoxide appears to be consistent with the requirements of Section 172(b)(3) and the definition of reasonable further progress in Section 171(1). The same appears to be true for TSP with respect to the Tucson Metropolitan Area. The schedule represents regular incremental reductions in the Tucson Metropolitan Area emissions needed for attainment of the carbon monoxide and the primary total suspended particulate standard by

1982. The emission density incremental reductions for TSP need to be shown to be sufficient for attainment in the remainder of the nonattainment area.

In addition, the schedule represents regular incremental reductions needed for attainment of the 0.08 ppm oxidant standard by 1982.

7. Emissions Growth

The plan does not provide an emission growth increment and/or emissions offsets for the construction of major stationary sources or major modifications of existing sources. The State and Pima County should submit regulations requiring emissions offsets and/or conformity with an identified emission growth increment to satisfy the requirements of Sections 172(b)(6) and 173.

8. Annual Reporting

The plan contains a commitment to submit annual reports of reasonable further progress, including an updated emission inventory. These reports are to be supplemented by interim progress reports every six months to identify the status of the air quality-related transportation programs. This commitment should be further supplemented by additional specific commitments from all participating agencies to develop and describe in the SIP:

(1) procedures for determination of conformity between transportation programs and projects and the SIP;

(2) programs to monitor and report on actual field effectiveness of each transportation control measure for which emission reduction credit is claimed.

9. Permit Program

The plan does not contain regulations for a permit program for major new or modified stationary sources conforming to the provisions of Section 173. Due to the State jurisdictional provisions both the State and Pima County must submit regulations for a permit program satisfying the Part D provisions.

10. Resources

The plan identifies financial and manpower resources for plan implementation and provides commitments on the part of implementing agencies.

11. Public and Government Involvement

The plan provides evidence of public, local government, and State involvement and consultation in the planning process, and includes a summary of public comments. In addition, the plan identifies air quality, health, welfare, economic, energy, and social effects of the plan provisions. The plan also documents the process used in designating responsible entities for preparing and implementing the revised SIP. All requirements of Section 172(b)(9) appear to be satisfied.

12. Public Hearing

The plan appears to conform to Section 172(b)(1) and 40 CFR 51.4 since it includes evidence that the SIP was adopted by the State after reasonable notice and public hearing.

Public Comments

Under Section 110 of the Clean Air Act, as amended, and 40 CFR Part 51, the Administrator is required to approve or disapprove revisions to the SIP submitted by the State. The Regional Administrator hereby issues this notice setting forth the above described revisions as proposed rulemaking and advises the public that interested persons may participate by submitting written comments to the Region IX Office.

Comments received on or before August 6, 1979, will be considered. Comments received will be available for public inspection at the EPA Region IX Library and at the locations listed in the Addresses Section of this notice.

The Administrator's decision to approve or disapprove the proposed revisions will be based on the comments received and on a determination whether the revisions meet the requirements of Section 110(a)(2) and Part D of the Clean Air Act and 40 CFR Part 51, Requirements for Preparation, Adoption, and submittal of State Implementation Plans. EPA believes the available period for comments is adequate because:

(1) The plan has been available for inspection and comment since May 1, 1979.

(2) EPA's notice published in the May 1, 1979 Federal Register (44 FR 25472) indicated that the comment period would be 30 days; and

(3) EPA has a responsibility under the Act to take final action by July 1, 1979, if possible, on that portion of the SIP that addresses the requirements of Part D. A longer for public comments would make that deadline difficult to meet.

Under Executive Order 12044 EPA is required to judge whether a regulation is "significant" and therefore subject to the procedural requirements of the Order or whether it may follow other specialized development procedures. EPA labels these other regulations "specialized". EPA has reviewed the regulations being acted upon in this notice and determined that they are specialized regulations not subject to the procedural requirements of Executive Order 12044.

Authority: Section 110, 129, 171 to 178 and 301(a) of the Clean Air Act as amended (42 U.S.C. §§ 7410, 7429, 7501 to 7508, and 7601(a)).

Dated: June 8, 1979.

Paul DeFalco, Jr.,

Regional Administrator.

[FR Doc. 79-20973 Filed 7-5-79; 8:45 am]

BILLING CODE 6560-01-M

[40 CFR Part 52]

[FRL 1264-7]

Requirements for Preparation, Adoption, and Submittal of Implementation Plans for Wisconsin

AGENCY: Environmental Protection Agency.

ACTION: Proposed Rule.

SUMMARY: This action proposes approving the request of the State of Wisconsin for an extension until March 1980, of the statutory timetable for the submittal of the portion of its State Implementation Plan (SIP) revision implementing the National Secondary Ambient Air Quality Standard for total suspended particulates. The following 11 secondary nonattainment areas are the subject of the extension: Brokaw, Green Bay, Kenosha, La Crosse, Madison, Manitowoc, Marshfield, Neenah, Oshkosh, Racine, and Superior. This request is consistent with the requirements contained in 40 CFR 51.31.

DATES: Comments must be received on or before August 6, 1979.

ADDRESS: SEND COMMENTS TO: John McGuire, Regional Administrator, U.S. Environmental Protection Agency, 230 South Dearborn Street, Chicago, Illinois 60604, Attention: Air Programs Branch.

Copies of the request are available for public inspection during normal business hours at the above address and at:

U.S. Environmental Protection Agency, Public Information Reference Unit, Room 2922, 401 M Street, SW, Washington, D.C. 20460.

Bureau of Air Management, Wisconsin Department of Natural Resources, 4610 University Avenue, P.O. Box 7921, Madison, Wisconsin 53707.

FOR FURTHER INFORMATION CONTACT: Mr. Robert Miller, Wisconsin State Specialist, Air Programs Branch, U.S. Environmental Protection Agency, Region V, 230 South Dearborn Street, Chicago, Illinois 60604, 312-353-2205.

SUPPLEMENTARY INFORMATION: On February 22, 1979, the Secretary of the Wisconsin Department of Natural Resources (DNR) submitted a request to the Region V Regional Administrator for an extension until March 1980 to submit the portion of the Wisconsin SIP which provides for attaining the Secondary National Ambient Air Quality Standard (NAAQS) for total suspended particulates (TSP). On April 16, 1979, the Director of the Bureau of Air Management submitted additional information justifying the need for the extension.

This request is in conformance with 40 CFR 51.31, which allows a State under certain conditions to request an extension for up to 18 months for submitting that portion of its SIP which provides for attainment of a secondary NAAQS.

Wisconsin has demonstrated to the U.S. Environmental Protection Agency (USEPA) that attainment of the secondary standard in these areas cannot be achieved without emission reductions greater than those which can be achieved through the application of reasonably available control technology (RACT).

Wisconsin has properly given notice of the requested extension to the State of Minnesota, which has two joint air quality control regions (AQCR) containing nonattainment areas: the Duluth (Minnesota)-Superior (Wisconsin) AQCR, and the Southeast Minnesota-La Crosse (Wisconsin) Interstate AQCR. Accordingly, the USEPA intends to approve the extension request. If approved the submission of the plan will be due on March 1, 1980.

Interested persons are requested to comment on the approvability of the extension. All comments received will be available for inspection during normal business hours at the Region V office.

It is proposed to amend Part 52 of chapter I, Title 40 of the Code of Federal Regulations as follows:

Subpart YY—Wisconsin

1. § 52.2570(c), is amended to add a new paragraph (12) to read as follows:

§ 52.2570 Identification of plan.

* * * * *

(c)* * *

(12) A request for an extension of the statutory timetable for the submittal of the portion of the Wisconsin SIP which provides for the attainment of the Secondary NAAQS for TSP was submitted by the Secretary, Wisconsin DNR on February 22, 1979, and was supplemented with additional information on April 16, 1979.

2. New section 52.2582, is added to read as follows:

§ 52.2582 Extensions.

(a) The Administrator hereby extends until March 1980 the statutory timetable for submission of Wisconsin's plan for attainment and maintenance of the Secondary NAAQS for TSP in Brokaw, Green Bay, Kenosha, La Crosse, Madison, Manitowoc, Marshfield, Neenah, Oshkosh, Racine and Superior. The plan will be due on March 1, 1980.

(42 U.S.C. § 7410(b).)

Dated: June 6, 1979.

John McGuire,

Regional Administrator.

[FR Doc. 79-20939 Filed 7-05-79; 8:45 am]

BILLING CODE 6560-01-M

[40 CFR Part 52]

[FRL 1265-8]

Availability of Implementation Plan Revision for State of Oregon

AGENCY: Environmental Protection Agency (EPA).

ACTION: Notice of Availability and Advance Notice of Proposed Rulemaking.

SUMMARY: EPA announces today that the State of Oregon Implementation Plan revision due for submittal by January 1, 1979 under the Clean Air Act Amendments of 1977 has been received and is available for public inspection. In addition, EPA is also announcing the availability of other previously submitted revisions to the Oregon SIP.

The public is invited to submit written comments to the record which will be held open for the receipt of public comments for a period of thirty (30) days. A Notice of Proposed Rulemaking describing the Plan and the action that EPA intends to take regarding the proposed revisions will be published in the Federal Register after the initial thirty (30) day public comment period has closed. A second period for the submittal of written comments will extend for thirty (30) days after the publication of the Notice of Proposed Rulemaking.

DATE: Comments are due by August 6, 1979.

ADDRESSESS: The Oregon submittal may be examined during normal business hours at the following locations:

Public Information Reference Unit, Library Systems Branch, Environmental Protection Agency, 401 M Street S.W., Washington, D.C. 20460.

Library, Environmental Protection Agency, Region X, 1200 Sixth Avenue, Seattle, Washington 98101.

State of Oregon, Department of Environmental Quality, 522 S.W. 5th Avenue, Yeon Building, 4th Floor, Portland, OR 97207.

Comments should be addressed to: Clark L. Gaulding, Chief, Air Programs Branch, M/S 629, Environmental Protection Agency, 1200 Sixth Avenue, Seattle, Washington 98101.

FOR FURTHER INFORMATION CONTACT: Michael J. Schultz, Air Programs Branch, Telephone No. (206) 442-1226 (FTS 399-1226).

SUPPLEMENTARY INFORMATION: Section 172 of the Clean Air Act, as amended in August 1977, requires that States submit revisions to their implementation plans by January 1, 1979 to provide for the attainment of the national ambient air quality standards (NAAQS) in areas designated non-attainment. On March 3, 1978 (43 FR 8962) EPA designated certain areas in Oregon as non-attainment. Subsequently, on April 4, 1979 EPA published in the Federal Register the General Preamble for Proposed Rulemaking on approval of plan Revisions for Non-Attainment Areas (44 FR 20372). The General Preamble is hereby incorporated into this Advance Notice of Proposed Rulemaking.

The State has responded by preparing implementation plan revisions as required by the Act for the non-attainment designation referred to above. Plan revisions also include separate State actions revising veneer dryer regulations statewide and total suspended particulate regulations for the Medford-Ashland area.

However, the control strategies for attainment of ozone standards have been deleted at this time from the Oregon Plan revision. The State Environmental Quality Commission has retained 0.08 ppm as the ambient standard for ozone and is presently deciding whether Oregon's recently developed strategy based on the 0.12 ppm federal standard is to be adopted and officially submitted as an interim measure. A decision on this issue is expected by early July. If the 0.12 ppm strategy is adopted by the Commission, the ozone control strategies would likely be submitted to EPA soon thereafter.

The purpose of this notice is to call the public's attention to the fact that this revision has been formally submitted to EPA and is available for public inspection at the locations noted above. The public is encouraged to submit

written comments regarding the proposed revisions and thus participate in this rulemaking activity.

Those interested may wish to first read the General Preamble for proposed rulemaking published by the EPA in the Federal Register on April 4, 1979 (44 FR 20372) which identifies the major considerations that will guide EPA's evaluation of proposed SIP revisions. A more detailed description of the proposed Oregon SIP revisions will be published in the Federal Register at a later date as part of a Notice of Proposed Rulemaking.

(Sections 110 and 172 of the Clean Air Act (42 U.S.C. 7410 and 7502)).

Dated: June 28, 1978.

Robert S. Bund,

Acting Regional Administrator.

[FR Doc. 79-20936 Filed 7-5-79; 8:45 am]

BILLING CODE 6560-01-M

[40 CFR Part 81]

[FRL 1258-2]

Air Quality Control Regions, Criteria, and Control Techniques; Attainment Status Designations—Arizona

AGENCY: Environmental Protection Agency (EPA).

ACTION: Proposed Rulemaking.

SUMMARY: This notice proposes to revise the attainment status designation of the Tucson area in Arizona for photochemical oxidant (Ox). The proposed revision is the result of EPA establishing a new National Ambient Air Quality Standard (NAAQS) for ozone of 0.12 ppm (primary and secondary) to replace the Ox standard of 0.08 ppm (44 ppm (44 FR 8202, February 8, 1979). The Tucson area is proposed to be redesignated from nonattainment for Ox to attainment for ozone.

EPA is soliciting public comments on the proposed redesignation. Relevant comments received within thirty days of the date of publication of this notice will be considered in the final rulemaking action. If the area is redesignated attainment, the requirements of Title I, Part D, of the Clean Air Act (CAA), as amended, would no longer apply.

DATES: Comments will be accepted if received on or before August 6, 1979.

ADDRESSES: Comments should be directed to:

Arnold Den, Chief, Air Technical Branch (A-4), Air and Hazardous Materials Division, Environmental Protection Agency, Region IX, 215 Fremont Street, San Francisco CA 94105.

Information pertinent to the proposed redesignation is available for public inspection during normal business hours at the following locations:

Public Information Reference Unit, Library (Room 2922), Environmental Protection Agency, 401 "M" Street, S.W., Washington D.C. 20460.

Library, Environmental Protection Agency, Region IX, 215 Fremont Street, San Francisco CA 94105.

Arizona Department of Health Services, Bureau of Air Quality Control, 1740 West Adams Street, Phoenix AZ 85007.

Pima County Health Department, Air Quality Control District, 151 W. Congress Street, Tucson AZ 85701.

Pima Association of Governments, 405 Transamerica Building, Tucson AZ 85701.

FOR FURTHER INFORMATION CONTACT: Morris I. Goldberg (A-4-3), Technical Analysis Section, Air Technical Branch, Air and Hazardous Materials Division, Environmental Protection Agency, Region IX, 215 Fremont Street, San Francisco CA 94105, Phone: (415) 556-2463.

SUPPLEMENTARY INFORMATION: On March 3, 1978, in accordance with Section 107 of the Clean Air Act Amendments of 1977, EPA promulgated attainment status designations for all states in relation to the NAAQS. EPA designated the entire area of Pima County in Arizona as nonattainment for Ox. On August 15, 1978, the State requested redesignation of the boundary of the Pima nonattainment area, reducing it in size from Pima County to the Tucson area. EPA approved the boundary redesignation on March 19, 1979 (44 FR 16388).

On February 8, 1979 (44 FR 8202) EPA established a new NAAQS for ozone of 0.12 ppm to replace the Ox standard of 0.08 ppm. In addition, EPA established a statistical method of determining whether the standard has been exceeded. The national standards for ozone are published as a revision to 40 CFR 50.9 and the statistical method as the new Appendix H, 40 CFR 50.

Because of the change in the standards, Governor Babbitt of Arizona submitted the State's redesignation of the Tucson area on May 21, 1979. The Governor recommended that the Ox nonattainment area be redesignated as an ozone attainment area. The redesignation was supported with data which indicates that the ozone air quality standards were not violated during the three year period, 1976 through 1978.

Under Section 107 of the CAA, a state may revise its designations of attainment status and submit to EPA for promulgation the revised designations with such modifications as the Agency deems appropriate. Based upon a review of the air quality data for ozone in the Tucson area and the use of the statistical method for determining whether violations of the NAAQS had occurred, EPA believes that the NAAQS for ozone have been attained.

If the area is redesignated as proposed, the State would not be subject to the requirements of Part D of the CAA for ozone in the Tucson area.

The Ox nonattainment plan for the Tucson area was submitted to EPA by the State on March 20, 1979. EPA approval/disapproval of the plan is addressed in a separate Federal Register notice. The Tucson area remains subject to the requirements of Part D of the CAA for Ox until EPA approves in a final rulemaking action the State's redesignation of the area to attainment for ozone.

Note.—The Environmental Protection Agency has determined that this document is not a significant regulation and does not require preparation of a regulatory analysis under Executive Order 12044.

[Secs. 107(d) and 301(a) of the Clean Air Act, as amended (42 U.S.C. 7407(d) and 7601(a))]

Dated: June 29, 1979.

Barbara Blum,

Acting Administrator.

[FR Doc. 79-20938 Filed 7-5-79; 8:45 am]

BILLING CODE 6560-01-M

[40 CFR Part 120]

[FRL 1206-1]

Water Quality Standards, Surface Waters of the State of Ohio

AGENCY: Environmental Protection Agency.

ACTION: Proposed Rulemaking.

SUMMARY: On August 8, 1978, the Regional Administrator for Region V of the United States Environmental Protection Agency (EPA), approved the water quality standards adopted by the State of Ohio except for several provisions. The Agency herein proposes rules to correct the deficiencies in the non-approved portions.

DATES: All written comments received on or before September 4, 1979, will be considered in the preparation of the final rulemaking. Comments should be submitted to the person listed immediately below.

FOR FURTHER INFORMATION CONTACT: Bill Benjey, Water Division, U.S. EPA, Region V, 230 Dearborn Street, Chicago, Illinois 60604, (312-353-2172).

SUPPLEMENTARY INFORMATION: Section 303(c) (33 U.S.C. 1313(c)) of the Clean Water Act, (86 Stat. 816) (33 U.S.C. 1251 et seq.), (the Act) establishes the requirements for state water quality standards review and revision. This section provides that, at least once every 3 years, each State shall hold public hearings for the purpose of reviewing water quality standards and, as appropriate, modifying and adopting standards. Whenever a State revises its water quality standards or adopts new standards, such standards must be submitted to EPA. If the Administrator determines that a standard is not consistent with the applicable requirements of the Act, he must notify the State and specify changes necessary to meet the requirements of the Act. If such changes are not adopted by the State within 90 days after the date of notification, the Administrator is required to initiate the promulgation of water quality standards consistent with the Act for the State. EPA's action today begins this promulgation process. All public comment and further information submitted by the State will be considered in formulating final regulations.

Background

The Ohio Environmental Protection Agency (OEPA) held public hearings on June 26, June 29, and July 5, 1977, to receive comments on proposed revised Ohio water qualify standards. Revised standards were adopted by the Director of OEPA on February 14, 1978. The standards were submitted to EPA on the same date in a document entitled, *"Water Quality Standards; Chapter 3745-1 of the Administrative Code."* The submission also included copies of the hearing transcripts, written testimony, and OEPA statements in justification of OEPA criteria and downgraded use designations.

On May 17, 1978, the Regional Administrator, Region V, notified the Governor of Ohio that certain of the standards were disapproved because they were not adequate to ensure protection of aquatic life in Ohio waters. The notification indicated that the documentation supplied by the State in support of portions of the standards had not met the requirements of the Act and its implementing regulations. The Regional Administrator indicated in his letter that if the State did not respond with acceptable standards within 90 days, EPA would be required to initiate promulgation of appropriate standards.

On August 9, 1978, EPA approved the Ohio water quality standards with the exception of the sections addressed in today's proposal. Although Ohio administrative personnel have expressed willingness to change several of the disapproved provisions, EPA must proceed with the statutory process of section 303(c) pending formal action by the state.

Statutory Basis and Purpose

In order to place EPA's action today in perspective, a general understanding of what constitutes a water quality standard is necessary. A water quality standard for a particular water body basically consists of two parts: a designated "use" for which the water body is to be protected (such as "agriculture," "recreation," or "fish and wildlife") and a numerical of qualitative pollutant concentration limit (or "criterion") which will support that use. (A more detailed discussion of water quality standards is presented in EPA's recent policy statement, 43 FR 29588, July 10, 1978 and in regulations at 40 CFR 130.17.)

Establishing the use component of a water quality standard for a given water body involves a judgment as to what use is attainable, given the goals of the Act and the water body's use and value for various purposes. The Act and EPA's regulations state that water quality standards shall be established taking into consideration the water's "use and value" for various purposes such as public water supply, propagation of fish and wildlife, recreation, industry, agriculture, and navigation (Section 303(c)(2); 40 CFR 130.17(b)(2)). In determining whether a standard is attainable, States consider environmental, technological, social, economic, and institutional factors (40 CFR 130.17(c)(1)).

The "criterion" component of a water quality standard, in contrast involves a decision about the water constituent concentration that must not be violated in order to support a particular use. Thus, the "criterion" is founded on scientific, technical considerations.

From this brief review it will be seen that if the concentration for a particular pollutant cannot be attained because of economic, environmental, or other factors, the particular water could be designated for a less restrictive use. In contrast, if a concentration generally necessary to support a given use need not be attained to support that use in a particular water body, then a less stringent criterion may be allowed. Such a situation may exist for instance because of natural background or other ecological conditions.

EPA's statement of current policy also summarizes the Agency's approach to the water constitutent (pollutant) concentrations which must not be exceeded to support a specific use. Under section 304(a) of the Act EPA has published criteria for 48 specific pollutants. (*Quality Criteria for Water* (QCW or the Red Book) (U.S. Government Printing Office, 1977, #055-001-01049-4, $3.50)). Since the numerical limits in the QCW are derived on a national scale they cannot take account of site specific characteristics of individual waters. However, it is EPA's judgment that the data base is sufficiently broad for the numerical criteria in the QCW to have presumptive applicability to all waters. "EPA's policy is that a State may adopt a numercial concentration level for a (QCW) pollutant which is less stringent than the (QCW) number, but only if a State provides adequate technical justification for the deviation. * * * Where a State does not provide adequate technical justification for a deviation, EPA will disapprove that portion of the State's water quality standard under section 303(c) and propose the appropriate (QCW) number for public comment. * * * EPA will then take into consideration all public comments including comments directed toward the propriety of the (QCW) number for specific waters of the State, before developing and promulgating a final water quality standard." (43 FR 29590, citations omitted).

Section 303(c) of the Act requires that state water quality standards "* * * protect the public health or welfare, enhance the quality of water and serve the purposes of this Act." The purpose of water quality standards, as with other sections of the Act, is to achieve the 1983 national goal, wherever, attainable, "* * * of water quality which provides for the protection and propagation of fish, shellfish, and wildlife and provides for recreation in and on the water * * *" (Section 101(a)(2)).

As noted in EPA's recent statement, EPA's policy with respect to the designation of individual water segments for one or more uses is based on this congressional goal (43 FR 29589). It is EPA's policy that uses consonant with the 1983 goal are the norm, and that less protective uses may be allowed only in carefully limited circumstances related to the determination of attainability. Thus EPA's regulations require that States maintain water uses currently being attained (40 CFR 130.17(c)(2)). If the existing water quality is insufficient to support the currently designated use, however, that use may be downgraded, but only upon a

demonstration that the designated use is "unattainable" because:

(1) Of natural background;

(2) Of irretrievable man-induced conditions; or

(3) Achievement of the designated use would require application of effluent limitations for existing sources more stringent than those required pursuant to section 301(b)(2) (A) and (B) of the Act (even assuming implementation of "best management practices" for nonpoint sources) and imposition of such extra controls would result in substantial and widespread adverse economic and social impact (40 CFR 130.17(c)(3)).

Guidance on the application of these downgrading tests is available in Chapter 5 of *Guidelines for State and Areawide Water Quality Management Program Development.* (The *Guidelines;* Notice of Availability published in 41 FR 48777, November 5, 1976).

As explained below, EPA's action today follows these policies. Where the State's justifications for downgrading use designations did not satisfy the test of § 130.17(c)(3), EPA is proposing to reinstate the former designated uses. Where the State has not supplied adequate technical justification for deviating from the QCW number, EPA is proposing that number.

EPA will consider site specific and other technical and scientific information relating to the necessity of attaining the QCW values in order to maintain the corresponding use designations and specific information relating to the downgrading factors listed above before formulating a final rule. In response to such information, for instance, the Agency recently promulgated a dissolved oxygen criterion for the State of Mississippi which is less stringent than the QCW value originally proposed.

Technical Basis

The technical bases for the water quality criteria proposed for incorporation into the Ohio water quality standards are those in the QCW. EPA hereby incorporates by reference the technical rationale and data base for each criterion contained in the QCW and herein proposed to supersede certain provisions of the Ohio water quality standards. EPA also incorporates by reference an EPA report entitled, "Methods of Acute Toxicity Tests of Fish, Macroinvertebrates and Amphibians" (EPA Publication 660/3-75-009). This publication is cited in two of the proposed regulations as the appropriate methodology for determining conformity with the Act.

Summary of Disapproved Standards and Contents of the Agency's Proposed Rule

The Regional Administrator disapproved numerical criteria for two pollutants for Ohio's Warmwater Habitat use category and several difinitions, procedures and provisions which tend to weaken the standards and contravene the provisions of the Act and EPA's regulations. EPA also disapproved use designations which constituted downgradings for 93 water segments. In addition to these disapprovals of the State's general standards, EPA disapproved several portions of the Ohio River water quality standards.

EPA is proposing (1) numerical criteria for dissolved oxygen and cyanide for the Warmwater Habitat use designation of the standards to replace the disapproved Ohio criteria; (2) several definitional and procedural changes to replace corresponding provisions in the Ohio submission; (3) modifications to the definition and use of variance to the standards (i.e., Seasonal Warmwater and Limited Warmwater Habitat use designations); (4) determinations of thermal mixing zone sizes on the same basis as non-thermal mixing zones, except where section 316(a) of the Act is utilized; (5) deletion of the provisions for exceptions based on high flow and unavoidable accidents; and (6) designation as Warmwater Habitat use waters of the 93 segments downgraded by the State with inadequate justification.

EPA also disapproved several provisions of the State-adopted standards for the Ohio River. The criteria adopted by Ohio for the Ohio River are inconsistent with the State's general Warmwater Habitat criteria even though the same beneficial use is designated for protection. Ohio maintains that as a matter of policy it must adopt the recommendations of the Ohio River Valley Water Sanitation Commission (ORSANCO) because it is a member of ORSANCO. EPA believes that several of the criteria consonant with ORSANCO's recommendation are inadequate to protect aquatic life indigenous to the Ohio River.

Notwithstanding this disapproval, however, EPA is not at this time proposing criteria for the portions of Ohio's standards which apply to the Ohio River. Several states share responsibility for the water quality of the Ohio River main stem. West Virginia and Kentucky, which have boundaries contiguous with Ohio along the Ohio River, are in the process of reviewing and revising their water quality standards under section 303(c). Three other states have jurisdiction over portions of the main stem and are at various stages of the triennial revision.

EPA is therefore deferring proposal for the Ohio portion of the Ohio River until a consistent set of water quality standards for the entire main stem can be developed. This set of standards will then serve as a basis for state adoption of standards, EPA approval/disapproval of adopted state standards, and if appropriate, EPA promulgation actions. EPA intends to publish a notice in the Federal Register announcing a technical review of existing and recommended standards for this purpose.

Finally, this proposed rulemaking in no way approves or disapproves any subsequent standards adopted by OEPA as section 3745-1-13 of the Ohio Administrative Code pertaining to the Lower Cuyahoga. The Agency will consider state-adopted standards submitted for the Lower Cuyahoga River as a separate action.

EPA therefore proposes rules today to supersede the disapproved sections of the Ohio Administrative Code. If Ohio adopts amendments substantively equivalent to the rules proposed today or as finally adopted by EPA, then EPA can withdraw these provisions.

Specific Proposals

EPA is proposing several specific provisions to supersede state adopted regulations in the Ohio Administrative Code. The EPA is proposing to establish a new § 120.45 in Part 120 of Title 40 of the Code of Federal Regulations to codify these provisions. The discussions of the proposed rules are numbered for clarity in presentation and to assist the public in responding to the Agency's proposals. A comparison of the State's adopted regulations and the Agency's proposed rule is presented to assist commenters (Appendix A).

(1) Subsection 120.45(a) of the proposed rule would not supersede or delete any portion of the Ohio regulation but would supplement those regulations by adding two definitions to clarify the use of these terms in the proposed rule. EPA would define "Act" as being the Clean Water Act and Regional Administrator as being the Environmental Protection Agency Administrator for EPA Region V or his designee.

(2) Subsection 120.45(b) would establish requirement that sample collection and sample preservation comply with requirements of 40 CFR Part 136. EPA proposes this requirement so as to maintain consistency among the various States so that all data submitted

to the Agency is comparable and uniform which facilitates the Agency's use of such data in furtherance of the Agency's responsibilities under the Clean water Act.

(3) Subsection 120.45(c) would change the mixing zone requirements of the Ohio water quality standards. Paragraph (1) clarifies that because variances to mixing zones are amendments to water quality standards such variances are subject to approval by the Regional Administrator. This change is in accordance with the Agency's regulation at 40 CFR 130.17. The proposed rule would also require that the variance specify the amended boundaries of a mixing zone and identify areas where water quality standards are to be achieved.

The proposed rule would also supersede the State's bioassay procedure in mixing zones. EPA proposes to change the bioassay provisions to those in the EPA publication "Methods of Acute Toxicity Tests of Fish, Macroinvertebrates and Amphibians" (EPA Publication 660/3-75-009). Here again the Agency is seeking consistency in methodolgy so as to make data comparable and thereby more useful to the Agency in carrying out its statutory responsibilities.

EPA's proposal would also supersede OAE3745-1-06(A)(6) which excludes waters classified as Seasonal Warmwater Habitat from the State's mixing zone requirements. EPA interprets the State's provision to mean that the protection afforded by the mixing zone requirements, such as mixing zone size and toxicity limitations, are inapplicable to waters designated as Seasonal Warmwater Habitats.

EPA proposes to supersede most of the provisions differentiating Ohio's requirements for thermal mixing zones from the general mixing zone requirements. EPA intends for the State to consider the same factors for thermal mixing zones as for non-thermal mixing zones, but with additional considerations and techniques on the impacts of temperature changes on aquatic life published in the QCW. Although Table 1 in the State's regulation is nullified for general application, the development of similarly formatted tables for case-by-case application using QCW techniques to calculate temperatures that protect selected aquatic species would be acceptable to EPA.

Other State thermal mixing zone provisions are proposed for deletion as unnecessary because non-thermal mixing zone requirements are made applicable or also have been nullified in the non-thermal mixing zone regulations.

(4) Subsection 120.45(d) would establish criteria for cyanide and dissolved oxygen, the two constitutents disapproved by the Regional Administrator in the State's Warmwater Habitat use designation.

Ohio has adopted a total cyanide criterion of 0.025 mg/l for Warmwater Habitat. The QCW recommends that total cyanide not exceed 5 ug/l (0.005 mg/l) for the protection of aquatic life. Since the State has not demonstrated that waters with cyanide concentrations as high as 0.025 mg/l can maintain a viable warmwater ecosystem, EPA is proposing the QCW number of 5 μg/l.

Ohio adopted a dissolved oxygen criterion of a minimum concentration of 5 mg/l for 16 hours of any 24-hour period with a minimum of 4mg/l for 8 hours of any 24-hour period. The QCW recommends that the minumum concentration of dissolved oxygen to maintain good fish populations is 5 mg/l. Ohio bases its dissolved oxygen criterion largely upon the fact that warm-water fish species are present in Ohio streams in which the diurnal ranges of dissolved oxygen concentrations exhibit minimum values less than 5 mg/l. However, it is EPA's judgment that there is insufficient information on the biota in the streams of the State to demonstrate that the species present in such streams represent well-balanced, healthy and reproducing populations. The presence of warmwater fish species does not indicate that dissolved oxygen concentrations less than 5 mg/l adequately protect the species during their sensitive embryo and hatching stages or maintain healthy populations that grow and spawn normally.

The dissolved oxygen criterion in the QCW is based on current scientific information on the environmental requirements necessary to maintain balanced, healthy and reproducing freshwater aquatic life populations. While EPA recognizes that fish can survive at dissolved oxygen concentrations less than 5 mg/l, maintenance of well-rounded fish populations characterized by an abundance of game fish (i.e., largemouth bass, bluegills, etc.) has been observed to occur only where dissolved oxygen concentrations are 5 mg/l or greater. Furthermore, one study reported in the QCW has shown that fish growth and the viability of juveniles are regulated by daily minimum dissolved oxygen concentrations and not by average dissolved oxygen concentrations.

(5) Paragraph (2) of § 120.45(d) proposes a definition for Seasonal Warmwater Habitat to supersede that adopted by the State. Under the State rule waters designated as Seasonal Warmwater Habitat are not required to meet the State's mixing zone standards and the criteria are relaxed to 1.5 mg/l for ammonia, to a minimum of 3 mg/l for dissolved oxygen, and to 0.01 mg/l for total residual chlorine. Ohio's regulation defines such waters to include those with low flows (i.e., the lowest 7 consecutive day average flow with a recurrence period of once in ten years (7Q10)) of less than 1 cubic foot per second (cfs).

It is EPA's judgment that 1 cfs is too large a flow for a low flow cut-off for defining such seasonal waters. Many relatively major perennial streams in Ohio with low flows of less than 1 cfs and more than .1 cfs support balanced stream ecologies. In streams characterized by alternating pools and riffles, such flows may support significant game-fish populations. EPA, therefore, proposes to define the low flow cut-off for Seasonal Warmwater Habitat streams as a minimum flow (7Q10) of 0.1 cfs.

Because Seasonal Warmwater Habitat is a new classification adopted by the State and requires less stringent water quality than the Warmwater classification, each designation of a water segment to this classification constitutes a downgrading. As noted above, 40 CFR 130.17 requires a justification for each use downgrading. EPA cannot approve such change of classifications *en masse* but requires a case-by-case justification for application of this classification.

Moreover, EPA does not agree with relaxing the State's mixing zone criteria or the criteria for ammonia, dissolved oxygen and chlorine *carte blanche*. The size of the mixing zone and the possibility of achieving criteria for these three constituents more protective than the State-adopted values must be evaluated in case-by-case reviews of the justifications submitted for downgrading to this beneficial use classification.

6. Ohio's definition of Limited Warmwater Habitat is unlike other use category established by the State. Rather than define generally applicable criteria, the State has established, in essence, a variance classification for waters which will not achieve one or more of the Warmwater Habitat classification limitations because of the discharge of specific pollutants by specified dischargers. EPA's Office of General Counsel discussed the nature of such variances and their use in OGC

Opinion #58 (Decision of the General Counsel on Matters of Law pursuant to 40 CFR 125.36(m), No. 58, March 29, 1977). The variance approach involves the same substantive and procedural requirements as downgradings, but unlike downgradings variances are both discharger and pollutant specific, are time-limited, and do not forego the currently designated beneficial use. (The relevant portions of OGC Opinion #58 are attached to this proposal as Appendix B).

The State's justifications were of three kinds: (1) The cost to a municipality to upgrade currently inadequate sewage treatment facilities because of delayed federal funding, (2) a combination of the previous situation with low stream flow, and (3) man-induced irretrievable conditions (i.e., physical limitations). For example:

a. Several justifications for downgradings were based on the argument that it would place a severe hardship on a municipality to require it to wholly finance sewage treatment works when a federal construction grant was scheduled to be made in the near future. The documentation submitted by the State contained no cost figures or analysis of economic and social impact. The mere assertion that a community would incur economic hardship because of delays in federal funding does not meet the test of "substantial and widespread adverse economic and social impact" set forth in 40 CFR 130.17(c)(3)(iii). That test requires a demonstration of substantial adverse effect from the incremental cost of treatment over and above that needed to meet the most stringent effluent limitations applicable under section 301 of the Act. In the case of municipal sewage treatment works this floor is best practicable waste treatment technology. While section 301(i) of the Act could have been applied by the State within the statutorily limited time period following passage of the 1977 Clean Water Act Amendments to grant case-by-case extensions, that remedy is no longer available. EPA will consider any further documentation the State may choose to submit in accordance with 40 CFR 130.17(c)(3)(iii) in support of these downgradings. In some cases the State may find it more appropriate to submit documentation in support of a variance as described in OGC Opinion #58.

b. Most of the statements in support of downgradings involved a combination of economic impact (cost of a municipality funding construction when federal funds will be available in the future) and low stream flow conditions (natural background conditions). The documentation consists primarily of descriptions of existing water quality conditions and construction grants status. Again, EPA will consider any pertinent documentation submitted to justify downgradings or variances before promulgating a final rule.

c. Several proposed downgradings were based on wastewater treatment technology limitations or irretrievable man-induced conditions. Some or all of these downgradings may be justifiable, but the documentation presented to EPA is not a sufficient basis for approval. In each case, a thorough technical, economic, and social analysis must be presented pursuant to 40 CFR 130.17 and the *Guidelines*.

d. The Ohio water quality standards also include downgradings for stream segments affected by acid mine drainage as a special case of irretrievable man-induced condition. Ohio requires that these segments meet the criteria for the Warmwater Habitat use designation, except for pH, total dissolved solids, total iron, total manganese, total aluminum, total zinc, and total sulfates. The adopted standards established no limits for these pollutants. Ohio briefly cites irretrievable, man-induced conditions and substantial economic impacts of efforts necessary to correct the conditions. For purposes of approving the requested downgradings, EPA needs case-by-case justifications which show present water quality conditions in such segments for these and other parameters (including biological parameters). Such evaluations will provide a basis for determining the specific water quality criteria variances that are justified in compliance with EPA requirements.

The Agency is responsible for ensuring that the intent of sections 101(a) and 303(c) of the Act, as interpreted in 40 CFR 130.17, is adhered to in State standards. Consequently, until such time as adequate downgrading or variance justifications in accordance with 40 CFR 130.17(c) are supplied by OEPA, EPA proposes to re-designate as Warmwater Habitat all Ohio waters which the State downgraded.

7. While the Regional Administrator approved the Limited Warmwater Habitat use classification, he concurrently disapproved all designations of waters to that classification because the documentation submitted by OEPA was insufficient to justify downgrading under § 130.17(c)(3). Subsection 120.45(e) of the proposed rule therefore supersedes the provisions in the Ohio regulation which downgraded the designated use from Warmwater Habitat to Limited Warmwater Habitat and reinstates the former designated use.

8. Subsection 120.45(f) of the proposed rule would amend Ohio's handling of low flow streams. Paragraph (f)(1) proposes a definition for low flow streams of a 7Q10 of 0.1 cfs which is 1/10 that of the State's regulations. Paragraph (f)(2) requires low flow streams generally to meet the water quality criteria supportive of the Warmwater Habitat use designation until the next water quality review and revision occurs. Paragraph (f)(3) requires that the quality of high quality low flow streams be maintained unless their designated use is changed under the State's water quality standards review and revision procedures of the continuing planning process. Paragraphs (f)(1) and (f)(2) are consistent with EPA's antidegradation and downgrading requirements.

As discussed above, the Agency believes the State's cut-off point to be at too substantial a flow, thereby excluding perennial streams exhibiting satisfactory warmwater habitats.

9. Section 120.45(g) proposes to supersede or nullify several provisions which Ohio has established to provide exceptions to the established standards. Ohio provides exceptions to all water quality standards when the flow in the receiving water is less than the 7Q10 as calculated by a particular technique identified in the regulations. EPA proposes paragraph g(1) to make OAC 3745-1-04 entitled "Standards Applicable to All Waters" applicable under all flow conditions.

Further, in paragraph (g)(2) EPA proposes that no low flow exemptions from water quality standards be allowed for periods during which stream flows less than the 7Q10 are caused by the operation of State constructed, operated, or licensed water projects. Thus water projects must either operate to maintain minimum flows or else NPDES permits must be adjusted to meet water quality standards at the artifically reduced flow rates. EPA believes that these proposals are not inconsistent with section 101(g) of the Act (33 U.S.C. 1251(g)) in light of the legislative history of that section (See 123 Cong. Record S19677-78, Dec. 15, 1977).

Section 120.45(g)(1) further proposes to nullify the State's high flow cut-off. Ohio provides for a complete exception to water quality standards when the flow rate exceeds that flow which is exceeded only 10 percent of the time. EPA has issued limited guidance on such a proposition in paragraph 5.8 of the *Guidelines*. While the Agency will

consider limited exceptions to water quality standards when the cause is related to flow, under carefully prescribed conditions and with an adequate justification, the Agency cannot approve a complete exception to the standards for all parameters. Such an approval would be inconsistent with the requirements of section 303(c) of the Act because it would not protect the public health or welfare; enhance the quality of water or serve the purposes of the Act which are to protect various designated uses. Some designated uses must be protected regardless of flow, as for example, public water supply.

Section 120.45(g)(1) also proposes to nullify the provision calling for an exception in the Ohio water quality standards whenever "uncontrollable accidents to a sewer or wastewater treatment system occur." The Agency has rejected this provision because such occurrences are provided for in the National Pollutant Discharge Elimination System permit program (See 40 CFR Part 125, Subpart C). The Agency believes the proper enforcement mechanism in such cases would be a decision relating to a permit violation rather than a variance to a water quality standard.

Section 120.45(g)(3) proposes an exception to water quality standards in limited areas when the violation of ths standards is caused by dredging, construction or the discharge of dredged or fill material. This exception parallels that provided by the State in requiring that the dredging or construction activity be in compliance with a permit issued under the regulations of the Corps of Engineers (33 CFR Part 209), and that the discharge of dredged or fill material be in compliance with a Corps of Engineer permit issued under section 404 of the Act. However, EPA proposes an additional requirement for such an exception. EPA would include an explicit requirement for compliance with provisions of the National Environmental Policy Act (NEPA). While NEPA requirements are implicit for any major federal action impacting the environment such as a Corps of Engineer approved project, explicit recognition in water quality standards helps to clarify unambiguously all requirements. (See *Guidelines*, paragraph 5-9).

Section 120.45(g)(4) proposes to define the term "reasonable time" during which exceptions to water quality standards may be allowed, as provided by the Ohio regulation. EPA proposes to limit that period for the low flow exception to only the period that the flow rate is less than the 7Q10 flow rate. While this limit would appear implicit in the State's regulation, the Agency's purpose is to clarify the Ohio provision and remove any ambiguity.

Section 120.45(g)(5) in essence adds a definition of the term "Best Management Practices" to the Ohio water quality standards. Best management practices (BMPs) are those practices developed in statewide or areawide water quality management plans to control non-point pollution under section 208 of the Clean Water Act. EPA also emphasizes that no relaxation of point source requirements specified in NPDES permits occurs when an exception to water quality standards is permitted. Thus, both appropriate BMPS and point source controls continue in effect through such periods. (See *Guidelines*, paragraph 5.8).

10. Section 120.45(h) proposes certain requirements for Ohio's water quality standards for Lake Erie. In paragraph (h)(1) EPA proposes to nullify the State's bioassay requirement for Lake Erie (OAE 37451011(b)(1)(b)) and apply the same provision as used for Warmwater Habitat in § 120.45(c). EPA is proposing these changes to maintain consistency between the Lake Erie water quality standards and the Ohio Warmwater provisions. (See discussion under item 3 above).

EPA also proposes in paragraph (h)(1) to reinstate the 23 acre maximum size limitation for mixing zones. This provision was contained in the previous Lake Erie water quality standards and was deleted by the State without any justification. Section 120.45(h)(2) proposes to supersede certain provisions that Ohio established for thermal mixing zones on Lake Erie. EPA proposes that thermal mixing zones meet the same requirements as other mixing zones unless a successful demonstration is made under section 316 of the Act. Also, EPA proposes to nullify Table 7(d) and all reference in the regulation to that table, and to delete any distinction as to the source of heat such as that made by the State between once-through cooling and close-cycle cooling blowdown.

It is EPA's judgment that thermally polluted discharges are not sufficiently distinctive to justify totally different mixing zone requirements. The State's general mixing zones requirements are sufficiently flexible to permit their application to thermal as well as other pollution. However, EPA proposes to include a rebuttable presumption that thermal mixing zones shall not exceed 23 acres in size. Section 316 of the Act provides the sole relief for thermally polluted discharges.

Availability of Record

The entire record of this proceeding which includes the various submissions by the State of Ohio and EPA's responses, and the documents incorporated by reference in this Preamble are available for public inspection and copying on week days in the Environmental Protection Agency, Region V office, at the address noted above during the Regional offices business hours of 8:15 a.m. to 4:45 p.m.

Public Hearings

EPA intends to hold three public hearings on this proposed rulemaking. The tentative locations for these hearings are Akron, Columbus, and Dayton, Ohio. EPA will publish a notice in the Federal Register identifying the location within these cities where the hearings will be held, times of the hearings and the format of the hearings at least 30 days prior to the date established for the first of the hearings.

Regulatory Analysis

Under Executive Order 12044 EPA is required to judge whether a regulation is "significant" and therefore subject to the procedural requirements of the Order or whether it may follow other specialized development procedures. EPA labels these other regulations "specialized." I have reviewed this regulation and determined that it is a specialized regulation not subject to the procedural requirements of Executive Order 12044.

(Sec. 101, 303 and 501 of the Clean Water Act, as amended (33 U.S.C. 1251, 1313, 1361))

Dated: June 22, 1979.

Barbara Blum

Acting Administrator.

A new § 120.45 which would be added to Part 120 of Title 40 of the Code of Federal Regulations is hereby proposed to read as follows:

§ 120.45 Ohio Water Quality Standards.

(a) Ohio Administrative Code, Section 3745-1-02 Definitions—the cited section does not include definitions for the terms "Act" or "Regional Administrator". The following definitions are to be used by the State of Ohio as if the definitions were incorporated in the above cited Code Section—(1) Act is the Clean Water Act, as amended (33 U.S.C. 1251 *et seq.*)

(2) Regional Administrator is the Administrator (or his designee) of Region V of the United States Environmental Protection Agency.

(b) Ohio Administrative Code, Section 3745-1-03 Analytical methods—the cited section does not require compliance with EPA sample collection

and sample preservation methods. The cited Ohio Administrative code section is null and void to the extent that it is inconsistent with the following: All methods of sample collection preservation and analysis shall be in accord with those prescribed in 40 CFR Part 136, *Test Procedures for the Analysis of Pollutants.*

(c) Ohio Administrative Code Section 3745-1-06—Mixing Zones—Indicated paragraphs of the cited Ohio Administrative Code section are null and void to the extent that they are inconsistent with the provisions of this section—(1) The Director, following prior EPA approval in accordance with section 303(c) of the Clean Water Act, may waive the requirements of sections (A)(1)(e), (f) and (g) of OAC 3745-1-06 and redefine the extent of a mixing zone whenever a discharger provides:

(i) information defining the actual boundaries (where the water quality standards are met) of the mixing zone in question, and

(ii) information and data proving no violation of sections (A)(1)(a), (b), and (c) and (d) of OAC 3745-1-06 by the mixing zone in question.

Note.—This paragraph supersedes OAC 3745-1-06(A)(2).

(2) The waters of the mixing zone shall not exceed at any time the 96 hour LC50 for any representative aquatic species, as determined from existing scientific literature or the 96 hour LC50 for any representative aquatic species, as determined by static bioassays for persistent toxicants and flow-through bioassays for non-persistent toxicants in accordance with methods described in "Methods of Acute Toxicity Tests of Fish, Macroinvertebrates, and Amphibians" (EPA Publication 660/3-75-009). In addition, no conditions within the mixing zone shall exist which result in the bioconcentration or bioaccumulation of materials at levels which may be harmful to aquatic organisms or their consumers.

Note.—This paragraph supersedes OAC 3745-1-06(A)(4)).

(3) OAC 3745-1-06(A)(6) concerning mixing zones for seasonal warmwater habitat is null and void.

(4) Thermal Mixing Zones—(i) A thermal mixing zone to permit dilution and cooling of a waste heat discharge shall be considered a region in which an organism's response to temperature is time-dependent. Exposure to temperature in a thermal mixing zone shall not cause an irreversible response which results in deleterious effects to the wildlife and aquatic life representative of the receiving waters.

Note.—This paragraph supersedes OAC 3745-1-06(B)(1).

(ii) Thermal mixing zone size limitations shall be established by the Director pursuant to OAC 3745-1-06(A) and § 120.45 (c)(1), (2), (3) and (4)(i) on a case-by-case basis for all point source discharges subject to a NPDES permit.

Note.—This paragraph supersedes OAC 3745-1-06(B)(2).

(iii) OAC 3745-1-06(B)(3), (B)(6), (B)(7), and Table 1 are null and void.

(d) Ohio Administrative Code, Section 3745-1-07 Water Use Designations—

(1) Warmwater Habitat—(i) The Cyanide water quality criterion in paragraph (A)(7) is null and void. A total cyanide water quality criterion of 0.005 mg/l is established.

(ii) The dissolved oxygen water quality criterion in paragraph (A)(8) is null and void. A dissolved oxygen water quality criterion of an instantaneous minimum of not less than 5.0 mg/l is established.

(2) Seasonal Warmwater Habitat—The definition adopted by Ohio is null and void. EPA establishes the following definition: Seasonal Warmwater Habitat—Waters capable of supporting the propagation and habitation of aquatic organisms on a seasonal basis. These waters have low flows as defined by the minimum 7 consecutive day low flow with a recurrence frequency of once in ten years of 0.1 cubic feet per second or less; have more than 50 percent of their total flow, when such flow rates occur, composed of wastewater effluents; and where it has been demonstrated that the conditions to support a warmwater habitat designation cannot be attained during all seasons. Application of this use designation shall be on a case-by-case basis subject to approval under EPA's water quality standards regulations.

Note.—This paragraph supersedes OAC 3745-1-07(D)

(e) Ohio Administrative Code Section 3745-1-08 Classification of Waters—classification of the named waters in this subsection for limited warmwater habitat in lieu of warmwater habitat in Paragraph (C) of the above cited section is null and void. The beneficial use designation of these waters is warmwater habitat.

Abrams Creek—Middleburg Hts. STP to confluence with Rocky River (Cuyahoga Co.).
Abrams Creek—Middleburg Hts. STP to Grayton Road (Cuyahoga Co.).
Auglaize River—Hamilton St. in Wapakoneta to Glynwood Road (Auglaize Co.).
Big Creek—Ford Motor Co. to confluence with Cuyahoga River (Cuyahoga Co.).
Black River—Elyria STP to confluence with Lake Erie (Lorain Co.).
Blanchard River—Findlay STP to hancock C.R. 128.
Brandywine Creek—Hudson Village STP to Macedonia STP (Summit Co.).
Brandywine Creek—Macedonia #15 to confluence with Cuyahoga River (Summit Co.).
Brandywine Creek—Macedonia #15 to Brandywine Gorge (Summit Co.).
Cemetary Creek—Jefferson STP to confluence with Mill Creek (Ashtabula Co.).
Chippewa Creek—Medina County sewer district #1 to confluence with Little Chippewa (Wayne Co.).
Chippewa Creek—confluence with Little Chippewa to confluence with Tuscarawas River (Summit Co.).
Cuyahoga River—Nonroe Falls Dam Pool (Summit Co.).
Cuyahoga River—Akron STP to Penninsula (Summit Co.).
Duck Creek and tributary—Headwaters to confluence with Little Miami River (Hamilton Co.).
East Branch Nimishillen Creek—Louisville to confluence with Middle Branch (Stark Co.).
East Branch Nimishillen Creek—Confluence with the Middle Branch to confluence with Nimishillen Creek.
East Branch Portage River—Fostoria STP to Cygnet Road (Wood Co.).
East Branch Rocky River Berea STP to confluence with West Branch (Cuyahoga Co.).
Fields Brook—Cook Rd. to confluence with Ashtabula River (Ashtabula Co.).
Great Miami River—from Dayton WWTP to 2nd St. in Franklin (Warren Co.).
Hurford Run—Headwaters to confluence with Nimishillen Creek (Stark Co.).
Huron River—Rt. 6 Bridge in Huron to confluence with Lake Erie (Erie Co.).
Jacob Creek—Willard STP to Holiday Lake (Huron Co.).
Jerome Fork—Confluence with Lang Creek to Old U.S. 30 in Jeromesville (Ashland Co.).
Killbuck Creek—Wooster STP to confluence with Little Killbuck (Wayne Co.).
Killbuck Creek—Wooster STP to Wayne-Holmes County Line (Wayne Co.).
Lang Creek—Ashland STP to confluence with Jerome Fork (Ashland Co.).
Little Chippewa Creek—Orrville STP to confluence with Chippewa Creek (Wayne Co.).
Maumee River—I-75 to confluence with Maumee Bay (Lucas Co.).
Middle Fork Little Beaver Creek—Salem STP to Mahoning-Columbiana County Line near Washingtonville (Mahoning Co.).
Mill Creek—Granger Rd. to confluence Cuyahoga River (Cuyahoga Co.).
Mill Creek—I-275 to Spring Grove Avenue (Hamilton Co.).
Mill Creek, Ross Run, West Fork and tributary—Spring Grove Ave. to confluence with Ohio River (Hamilton Co.).
Mud Brook—Confluence with powers Brook Wyoga lake (Summit Co.).

Muskingum River—Confluence of Walhonding and Tuscarawas Rivers to Rt. 83 Bridge (Coshocton Co.).
Nimishillen Creek—Canton STP to confluence with Sandy Creek (Stark Co.).
North Branch Portage River—confluence with Poe Ditch to confluence with Middle Branch in Pemberville (Wood Co.).
Ottawa River—Standard Oil Lima Refinery outfall to Allen County Line (Allen Co.).
Ottawa River—Standard Oil Lima Refinery outfall to Allantown (Allen Co.).
Ottawa River—Lover's Lane Control Structure near Bellfontaine Avenue in Lima to Neff Road (Allen Co.).
Ottawa River—Cherry Street to Summit Street (Lucas Co.).
Paramour Creek—Crestline STP to confluence with Allen Run (Crawford Co.).
Plum Creek—Oberlin STP to confluence with West Branch Black River (Lorain Co.).
Pond Brook—Aurora Shores STP to confluence with Tinkers Creek (Summit Co.).
Powers Brook—Hudson #6 to confluence with Mud Brook (Summit Co.).
Rattlesnake Creek—Norwalk STP to confluence with Huron River (Huron Co.).
River Styx—Wadsworth STP to confluence with Chippewa Creek (Wayne Co.).
Rocky Fork—Mansfield STP to Applegate Road (Richland Co.).
Rocky River—Lakewood STP to confluence with Lake Erie (Cuyahoga Co.).
Sandusky River—Fremont STP to confluence with Muskellunge Creek (Sandusky Co.).
Sandusky River—Bucyrus STP to Mt. Zion Rd. (Crawford Co.).
Scioto River—Greenlawn Avenue Dam to confluence with Big Darby Creek (Pickaway Co.).
Skellinger Creek—New London STP to confluence with East Branch Vermilion (Huron Co.).
State Line Creek—from BFI & State line to confluence with North Fork (Lucas Co.).
Swan Creek—Detroit Ave. to confluence with Maumee River (Lucas Co.).
Tuscarawas River—Barbero STP to confluence with Chippewa Creek (Summit Co.).
Tuscarawas River—confluence with Chippewa Creek to Massillon STP (Stark Co.).
Tuscarawas River—from PP to confluence with Sandy Creek (Stark Co.).
Tuscarawas River—River mile 5.0 to confluence with Muskingum River (Coshocton Co.).
Wahoo Ditch—Ravenna STP to confluence with Breaknee Creek (Portage Co.).

Note.—This paragraph supercedes OAC 3745-1-08(C)(1)).

Big Run—New Nacco Mine #3 portal to confluence with Ohio River (Belmont Co.).
Boggs Fork and tributaries—Holloway to confluence with Stillwater Creek (Harrison Co.).
Brush Creek and tributaries—Headwaters to confluence with Muskingum River (Muskingum Co.).
Buffalo Creek and tributaries—Headwaters to confluence with Buffalo Fork (Noble Co.).
Buffalo Fork and tributaries—Headwaters to confluence.
Buffalo Reem—Headwaters to confluence with West Fork Duck Creek (Noble County)
Captina Creek—Confluence of North and South Forks to confluence with Ohio River (Belmont County)
Cat Run—New Nacco Mine #1 portal to confluence with Captina Creek (Belmont County)
Conotton Creek and tributaries—Headwaters to Jewett (Harrison County)
Crooked Creek and tributaries—Headwaters to confluence with Wills Creek (Guernsey County)
Cushing Run and tributaries—Headwaters to confluence with Muskingum River (Washington County)
Duck Creek—Confluence of East and West Forks to confluence with Ohio River (Washington County)
East Fork Duck Creek and tributaries, except Pawpaw Creek—Headwaters to confluence with Duck Creek (Washington County)
Elk Fork and Puncheon Fork—Headwaters to S.R. 677 (Vinton County)
Federal Creek and all tributaries—Confluence with Sharps Fork to confluence with Hocking River (Athens County)
Hewett Fork and tributaries—Headwaters to confluence with Raccoon Creek (Vinton County)
Johnny Woods River—Headwaters to confluence with West Fork Duck Creek (Noble County)
Jonathan Creek and tributaries, including Turkey Run—Confluence with Turkey Run to confluence with Moxahala Creek (Muskingum County)
Kyger Creek and tributary—Headwaters to confluence with Ohio River (Gallia County)
Leatherwood Creek and Shannon Run—Headwaters to Cambridge (Guernsey County)
Little McMahon Creek—Confluence with Chambers Run to confluence with McMahon Creek (Belmont County)
Little Raccoon Creek—T.R. 21 to C.R. 26 (Vinton County)
Little Raccoon Creek—Confluence with Sand Run to confluence with Raccoon Creek (Gallia County)
Little Raccoon Creek tributaries from Lake Alma to Jackson-Gallia County line—Headwaters to confluence with Little Raccoon Creek (Jackson County)
Little Short Creek and Coal Run—Headwaters to confluence with Short Creek (Jefferson County)
Little Stillwater Creek—Confluence with Plum Run to Dennison (Tuscarawas County)
McMahon Creek—Headwaters to confluence with Ohio River (Belmont County)
Mill Creek and tributaries—Headwaters to confluence with Walhonding River (Coshocton County)
Mill Fork and tributaries—Headwaters to confluence with Wakatomika Creek (Muskingum County)
Monday Creek, Little Monday Creek and Snow Creek—Headwaters to confluence with Hocking River (Athens County)
Moxahala Creek and tributaries—Headwaters to confluence with Muskingum River (Muskingum County)
North Fork Yellow Creek—Salineville to confluence with Yellow Creek (Jefferson County)
Opossum Creek and tributary—Headwaters to confluence with Ohio River (Monroe County)
Osburn Run—Headwaters to confluence with Ohio River (Lawrence County)
Piedmont reservoir tributaries—Headwaters to confluence with Piedmont Reservoir (Belmont County)
Pipe Creek—Headwaters to confluence with Ohio River (Belmont County)
Raccoon Creek, including West and East Branches—Headwaters to Tycoon Lake (Vinton County)
Raccoon Creek tributaries, except Elk Fork, from Lake Hope to Vinton-Gallia county line—Headwaters to confluence with Raccoon Creek (Vinton County)
Rush Creek—Headwaters to confluence with Little Rush Creek (Fairfield County)
Short Creek, Piney Fork and Middle Fork and tributaries—Headwaters to confluence with Ohio River (Jefferson County)
Stillwater Creek—Headwaters to confluence with Bushy Fork (Harrison County
Sunday Creek and West Branch—Headwaters to confluence with Hocking River (Athens County)
Twomile Run—Benedict preparation plant to confluence with Raccoon Creek (Vinton County)
Wakatomika Creek—Frazeysburg to confluence with Muskingum River (Muskingum County)
Warren Run—Headwaters to confluence with West Duck Creek (Noble County)
West Fork Duck Creek—Headwaters to confluence with Duck Creek (Washington County)
Wheeling Creek—Headwaters to confluence with Ohio River (Belmont County)
White Eyes Creek and tributary—Headwaters to confluence with Wills Creek (Coshocton County)
Wills Creek—Cambridge to downstream Wills Creek Reservoir (Coshocton County)
Yellow Creek—Berghotz to confluence with Ohio River (Jefferson County)

Note.—This paragraph supercedes OAC 3745-1-08(C)(2)).

(f) Ohio Administrative Code 3745-1-09 Low Flow Streams is null and void. EPA establishes the following requirements:

(1) Low flow stream means that portion of a water course where the minimum seven consecutive day average flow that has a recurrence frequency of once in ten years (not attributable to discharge and other hydraulic alterations) is 0.1 cubic feet per second or less.

Note.—This paragraph supersedes OAC 3745-1-09(A)(1).

(2) Except as provided in paragraph (f)(3) of this section, water courses that meet the requirements for low flow

streams as established in paragraph (f)(1) of this section are required to meet the water quality criteria supportive of the warmwater habitat use designation. These water courses may be considered for a different use classification during the next water quality standards review proceeding which includes a public hearing and other public participation procedures in Ohio's continuing planning process.

Note.—This paragraph supersedes OAC 3745-1-09(A)(2).

(3) High quality low-flow streams means that portion of a watercourse where:

(i) Section 120.45(f)(1) of this rule is met,

(ii) Water quality criteria supportive of the use designation warmwater habitat or higher are met presently in the stream, and/or

(iii) A diverse aquatic community exists in the stream as determined by the Director.

Note.—This paragraph supersedes OAC 3745-1-09(B).

(4) Water courses determined to be of high quality under paragraph (f)(3) of this section shall be maintained at their present quality until such waters are reclassified to another use designation through the water quality standards revision procedure of the Ohio continuing planning process. Mixing zone requirements as established in OAC 3745-1-06 shall not apply to such streams. Instead, ambient water quality shall be maintained at all points in the stream until a mixing zone is formally established by the Director through a process which includes a public hearing.

Note.—This paragraph supersedes OAC 3745-1-09(C)

(g) Ohio Administrative Code 3745-1-10 Conditions for Exceptions—(1) Paragraphs (A)(2), (A)(4), (A)(5), (B) and (C) of the Code are null and void;

(2) No exception to meeting water quality standards due to low flows shall be recognized when the cause of the low flow is a State-operated or State-regulated water project which artifically reduces the flow rate to less than the naturally occurring 7Q10 or other established minimum flow.

(3) The following provisions shall be applied by Ohio as if part of OAC 3745-1-10.

(i) Whenever dredging, construction activities or discharge of dredged or fill material occur, or during the period of time when the effects of prior dredging, construction activities or discharge of dredged or fill material degrade water quality outside of a mixing zone; such activities have been permitted by the U.S. Army Corps of Engineers; and the temporary variance to the standards has been evaluated and the environmental impacts determined acceptable in either a negative declaration or an impact statement prepared pursuant to the National Environmental Policy Act (42 U.S.C. 4321 *et seq.*), then the provisions of OAC 3745-1-06 to 09 shall not apply.

Note.—This paragraph supersedes OAC 3745-1-10(A)(5)

(ii) All exceptions will apply only to the specific water quality criteria involved in each case and only for a reasonable period of time as determined by the Director. However, for the purpose of applying the low flow exception to water quality standards, a reasonable period of time is that period when the flow rate is less than the minimum seven consecutive day average flow with a recurrence frequency of once in ten years.

Note.—This paragraph superdedes OAC 3745-1-10(B)

(iii) Best management practices, including those defined in statewide or areawide water quality management plans developed under section 208 of the Clean Water Act, shall be required during such exemption from water quality standards in order to minimize damage to the environment.

Note: This paragraph supersedes OAC 3745-1-10(C).

(h) Ohio Administrative Code 3745-1-11 Lake Erie Standards—

(1) The following paragraphs of the cited Ohio Administrative Code section are null and void: (B)(1)(b), (B)(2)(a), (B)(2)(b), (B)(2)(C), (B)(2)(d), and Table 7d;

(2) The following provisions shall be applied by Ohio as if part of OAC 3745-1-11:

(i) The waters of the mixing zone shall not exceed at any time the 96 hour LC50 for any representative aquatic species, as determined from exising scientific literature, or the 96 hour LC50 for any representative aquatic species, as determined by static bioassays for persistent toxicants and flow-through bioassays for non-persistent toxicants in accordance with methods described in "Method of Acute Toxicity Tests of Fish, Macroinvertebrates and Amphibians" (EPA publication 660/3-75-009). In addition, no conditions within the mixing zone shall exist which result in the bioconcentration or bioaccumulation of materials at levels which may be harmful to aquatic organisms or their consumers. Subject to paragraph (h)(2)(iii) of this section, a mixing zone shall not exceed 23 acres in area.

Note: This paragraph supersedes OAC 3745-1-11(B)(1)(b).

(ii) A thermal mixing zone to permit dilution and cooling of a waste heat disharge, shall be considered a region in which organism response to temperature is time dependent. Exposure to temperature in a thermal mixing zone shall not cause an irreversible response which results in deleterious effects to the wildlife and aquatic life representative of the receiving waters.

Note: This paragraph supersedes OAC 3745-111(B)(2)(a).

(iii) Thermal mixing zone size limitations shall be established by the Director pursuant to OAC 3745-1-11(1) and paragraph (h)(2) (i) and (ii) of this section on a case-by-case basis for all thermal point source discharges subject to a NPDES permit. However, thermal mixing zone shall not exceed 23 acres in area, except that a larger thermal mixing zone which will not adversely affect the uses of the receiving water may be demonstrated in accordance with Section 316 of the Clean Water Act.

Note; This paragraph supersedes OAC 37451-11(B)(2)(b).

BILLING CODE 6560-01-M

3745-1-06 MIXING ZONES

(A) NON-THERMAL

(1) Except as subsequent provisions of Division (A) of this Rule establish different limits, no mixing zone shall:

(a) Interdict the migratory routes or interfere with natural movements, survival, reproduction, growth, or increase the vulnerability to predation of any representative aquatic species;

(b) Include spawning or nursery areas of any representative aquatic species;

(c) Include a public water supply intake;

(d) Include any bathing area where bath houses and/or lifeguards are provided;

(e) Constitute more than one-half of the width of the receiving watercourse nor constitute more than one-third of the area of any cross-section of the receiving watercourse;

(f) Constitute more than one-fifth of the area of any cross-section of the mouth of a receiving watercourse (the mouth constituting that area of the stream from the confluence upstream for a distance five times the width of the stream at the confluence);

(g) Extend downstream at any time a distance more than five times the width of the receiving watercourse at the point of discharge.

~~(2) The Director may waive the requirements of Sections (A)(1)(c), (f) and (g) of this rule whenever a discharger provides:~~

~~(a) information defining the actual boundaries (where the Water Quality Standards are met) of the mixing zone in question; and~~

~~(b) information and data proving no violation of Sections (A)(1)(a), (b), (c) and (d) of this rule by the mixing zone in question.~~

Appendix A to FRL 1206-1

(c) Ohio Administrative Code Section 3745-1-06 - Mixing Zones - Indicated paragraphs of the cited Ohio Administrative Code section are null and void to the extent that they are inconsistent with the provisions of this section -

(1) The Director, following prior EPA approval in accordance with section 303(c) of the Clean Water Act, may waive the requirements of sections (A)(1)(c), (f) and (g) of OAC 3745-1-06 and redefine the extent of a mixing zone whenever a discharger provides:

(A) information defining the actual boundaries (where the water quality standards are met) of the mixing zone in question, and

(B) information and data proving no violation of sections (A)(1) (a), (b), and (c) and (d) of OAC 3745-1-06 by the mixing zone in question.

(Note: This paragraph supersedes OAC 3745-1-06(A)(2)).

3745-1-06 MIXING ZONES

(3) For watercourses classified as Coldwater Habitat and Exceptional Warmwater Habitat in Rule 3745-1-08 of the Ohio Administrative Code the standards set forth in Sections (A)(1)(a) through (d) of this rule shall apply, and in addition no mixing zone shall:

(a) constitute more than one-third of the width of the receiving watercourse nor constitute more than one-fifth of the area of any cross-section of the receiving watercourse or,

(b) extend downstream at any time a distance more than three times the width of the receiving watercourse at the point of discharge

~~(4) At least 90 per cent of the volume of the mixing zone shall not exceed at any time the 24 to 96 hour median tolerance limit (TLm) or LC_{50} for any representative aquatic species, as determined from existing scientific literature or the 96 hour median tolerance limit (TLm) or LC_{50} for any representative aquatic species, as determined by static bioassays for persistent toxicants and dynamic bioassays for non-persistent toxicants in accordance with methods described in "Standard Methods for the Examination of Water and Wastewater," 14th Edition, 1975, published by the American Public Health Association, American Water Works Association and the Water Pollution Control Federation~~

(5) For lakes and reservoirs except Lake Erie classified as State and National Resource Water in Rule 3745-1-05 of the Ohio Administrative Code, no mixing zone shall be permitted

~~(6) For all streams classified as Seasonal Warmwater Habitat in Rule 3745-1-08 of the Ohio Administrative Code, the mixing zone criteria in Division (A) (1) through (5) of this rule will not apply~~

(B) THERMAL

~~(1) A thermal mixing zone to permit dilution and cooling of a waste heat discharge shall be considered a region in which organism response to temperature is time-dependent Exposure to temperatures in a thermal mixing zone shall not cause an irreversible response which results in deleterious effects to the wildlife and aquatic life representative of the receiving waters. The daily average temperature in a thermal mixing zone at the point nearest to the discharge that is accessible to the resident aquatic organisms shall not exceed the temperatures in Table 1 at the corresponding~~

(2) The waters of the mixing zone shall not exceed at any time the 96 hour LC50 for any representative aquatic species, as determined from existing scientific literature or the 96 hour LC50 for any representative aquatic species, as determined by static bioassays for persistent toxicants and flow-through bioassays for non-persistent toxicants in accordance with methods described in "Methods of Acute Toxicity Tests of Fish, Macroinvertebrates, and Amphibians" (EPA Publication 660/3-75-009). In addition, no conditions within the mixing zone shall exist which result in the bioconcentration or bioaccumulation of materials at levels which may be harmful to aquatic organisms or their consumers.

(Note: This paragraph supersedes OAC 3745-1-06(A)(4)).

(3) OAC 3745-1-06(A)(6) concerning mixing zones for seasonal warmwater habitat is null and void.

(4) Thermal Mixing Zones -

(A) A thermal mixing zone to permit dilution and cooling of a waste heat discharge shall be considered a region in which an organism's response to temperature is time-dependent. Exposure to temperature in a thermal mixing zone shall not cause an irreversible response which results in deleterious effects to the wildlife and aquatic life representative of the receiving waters.

(Note: This paragraph supersedes OAC 3745-1-06(B)(1)).

3745-1-06 MIXING ZONES

~~ambient temperature. At ambient temperatures of 59F (15.0C) and above, the daily average temperature in a thermal mixing zone will be determined on a case-by-case basis~~

~~(2) Thermal mixing zone size limitations shall be~~ established ~~by the Director pursuant to Section (B)(1) of this rule on a case-by-case basis for all point source discharges subject to permit.~~

~~(3) Except as Sections (B)(1) and (B)(2) of this rule establish different limitations, no thermal mixing~~ zone ~~shall:~~

~~(a) interdict the migratory routes or interfere with natural movements, survival, reproduction, growth, or increase the vulnerability to predation of any representative aquatic species;~~

(b) ~~interfere with or prevent the recovery of an aquatic community or species population that could reasonably be expected as previously limiting water quality conditions improve;~~

~~(c) include a public water supply intake, or;~~

~~(d) include any bathing area where bath houses and/or life guards are provided.~~

(4) For all watercourses classified as Coldwater Habitat and Exceptional Warmwater Habitat in Rule 3745-1-08 of the Ohio Administrative Code, thermal mixing zones will not be permitted.

(5) For lakes and reservoirs, except Lake Erie, classified as State and National Resource Water in Rule 3745-1-05 of the Ohio Administrative Code, no thermal mixing zone shall be permitted.

~~(6) For all streams classified as Seasonal Warmwater Habitat in Rule 3745-1-08 of the Ohio Administrative Code, the mixing zone criteria in Division (B)(1) through (3) of this rule will not apply.~~

~~(7) Discharges of closed cycle cooling blowdown with a flow of less than five per cent of the seven day once in ten year low flow of the receiving water body will be exempt from Division (B)(1) through (3) of this rule~~

(B) Thermal mixing zone size limitations shall be established by the Director pursuant to OAC 3745-1-06(A) and Section 120.45 (c)(1), (2), (3) and (4)(A) on a case-by-case basis for all point source discharges subject to a NPDES permit.

(Note: This paragraph supersedes OAC 3745-1-06(B)(2)).

(C) OAC 3745-1-06(B)(3), (B)(6), (B)(7), and Table 1 are null and void.

3745-1-05 MIXING ZONES

~~Table 1: Daily average temperatures of thermal mixing zones at corresponding ambient temperatures as required in~~ Section (B)(1) of ~~this rule. Shown as degrees Fahrenheit and (Celsius).~~

Ambient-°F(°C)	Daily Average Temperature-°F(°C)	Ambient-°F(°C)	Daily Average Temperature-°F(°C)
~~32(0)~~	~~50(10.0)~~	~~48(8.9)~~	71(21.7)
~~33(0.6)~~	~~50(10.0)~~	~~49(9.4)~~	~~73(22.8)~~
~~34(1.1)~~	~~50(10.0)~~	~~50(10.0)~~	~~75(23.9)~~
~~35(1.7)~~	~~51(10.6)~~	~~51(10.6)~~	~~76(24.4)~~
~~36(2.2)~~	~~52(11.1)~~	~~52(11.1)~~	~~78(25.6)~~
~~37(2.8)~~	~~54(12.2)~~	~~53(11.7)~~	~~79(26.1)~~
~~38(3.3)~~	~~55(12.8)~~	~~54(12.2)~~	~~81(27.2)~~
~~39(3.9)~~	~~57(13.9)~~	~~55(12.8)~~	~~83(28.3)~~
~~40(4.4)~~	~~58(14.4)~~	~~56(13.3)~~	~~85(29.4)~~
~~41(5.0)~~	~~60(15.6)~~	~~57(13.9)~~	~~86(30.0)~~
~~42(5.6)~~	~~62(16.7)~~	~~58(14.4)~~	~~88(31.1)~~
~~43(6.1)~~	~~63(17.2)~~	~~59(15) and above daily average limit will be determined on a case by case basis pursuant to Rule 3745-1-06(B)(1) and (2).~~	
~~44(6.7)~~	~~65(18.3)~~		
~~45(7.2)~~	~~66(18.9)~~		
~~46(7.8)~~	~~68(20.0)~~		
47(8.3)	~~70(21.1)~~		

3745-1-07 WATER USE DESIGNATIONS

(D) SEASONAL WARMWATER HABITAT -

~~These are waters capable of supporting the propagation and habitation of aquatic organisms on a seasonal basis. These waters have a minimum annual 7-day average flow that has a recurrence period of once in ten years (not attributable to discharges and other hydraulic alterations) of 1 cubic foot per second or less and having more than 50 per cent of the total flow under such conditions composed of wastewater effluents. Mixing zone standards, Rule 3745-1-05 of the Ohio Administrative Code will not apply.~~

Note: Remainder of this section is omitted. The omitted material consists principally of specific criteria limitations.

(2) Seasonal Warmwater Habitat - The definition adopted by Ohio is null and void. EPA establishes the following definition: Seasonal Warmwater Habitat - Waters capable of supporting the propagation and habitation of aquatic organisms on a seasonal basis. These waters have low flows as defined by the minimum 7 consecutive day low flow with a recurrence frequency of once in ten years of 0.1 cubic feet per second or less; have more than 50 percent of thei total flow, when such flow rates occur, composed of wastewater efflu and where it has been demonstrated that the conditions to support a warmwater habitat designation cannot be attained during all seasons.

3745-1-07 WATER USE DESIGNATIONS

(E) LIMITED WARMWATER HABITAT

These are waters incapable of meeting criteria necessary for the support of populations of fish and associated vertebrate and invertebrate organisms and plants either on a seasonal or year around basis This degraded condition may be due to relative low stream flow coupled with heavily populated and/or industrialized areas that have outdated sewer systems and/or waste treatment facilities However, exceptions from Warmwater Habitat criteria will apply only to specific criterion during specified time periods and/or flow conditions This will be determined on a case-by-case basis and comply with all federal and state water quality statutes This designation must be justified by significant economic or technological rationale and is to be used only as a temporary classification with upgrading of use designation at the earliest possible time prior to July 1, 1983, where attainable

Standards for the support of this use designation will be the same as the standards for the support of the use desgination Warmwater Habitat However, individual criterion will be varied on a case-by-case basis and will supersede the standards for other use designations where applicable The ammonia-N limit will correspond to the concentrations in Table 2, where applicable, but the most stringent concentration to be met at any time will be the value set in Section 3745-1-08(C)(1) of the Ohio Administrative Code

Note: EPA has discussed the application of this designation in the text of the Preamble. Reference should be made to that discussion and also to Appendix B which contains an excerpt from OGC Opinion #58 which explains the basis for EPA's application of this use designation.

3745-1-09 LOW FLOW STREAMS

(A) ~~(1) Low flow stream means that portion of a watercourse where:~~

~~(a) the annual minimum seven day average flow that has a recurrence period of once in ten years (not attributable to discharges and other hydraulic alterations) is one cubic foot per second or less, and~~

~~(b) during minimum flow conditions described in paragraph (A)(1)(a) of this rule more than fifty per cent of the total flow of the stream is composed of discharges~~

~~(2) Watercourses that meet the requirements for low-flow streams established in paragraphs (A)(1)(a) and (b) of this rule are required to meet the water quality standards supportive of the use designation Seasonal Warmwater Habitat in lieu of Warmwater Habitat. These watercourses will be classified for the appropriate use designation at the next annual public hearing dealing with use designations.~~

~~(B) High quality low-flow stream means that portion of a watercouse where:~~

~~(1) Division 3745-1-09(A)(1)(a) of this rule is met and Division 3745-1-09(A)(1)(b) of this rule is not met, and~~

~~(2) standards supportive of the use designation Warmwater Habitat or higher are met presently in the stream, and/or~~

~~(3) a diverse aquatic community exists in the stream as determined by the Director~~

~~(C) Watercourses determined to be of high quality under division (B)(1) of this rule shall have their present ambient water quality maintained until such time that these watercourses can be classified with an appropriate use designation at a public hearing. Mixing zone standards as established in rule 3745-1-05 of the Ohio Administrative Code shall not apply to such streams. Instead, ambient water quality will be maintained at all points in the stream until such time as the stream acquires a designated use at which time the minimum water quality standards supportive of that use will be applied at all points in the stream.~~

~~(D) Low-flow streams that do not meet division (A)(1) or (B) of this rule shall meet the standards supportive of Warmwater Habitat until such time that they are classified with an appropriate use designation at a public hearing.~~

(E) Ohio Administrative Code 3745-1-09 Low Flow Streams is null void. EPA establishes the following requirements:

(1) Low flow stream means that portion of a water course where the minimum seven consecutive day average flow that has a recurrence frequency of once in ten years (not attributable to discharge and other hydraulic alterations) is 0.1 cubic feet per second or less.

(Note: This paragraph supersedes OAC 3745-1-09(A)(1)).

(2) Except as provided in paragraph (3) below, water courses that meet the requirements for low flow streams as established in paragraph (1) are required to meet the water quality criteria supportive of the warmwater habitat use designation. These water courses may be considered for a different use classification during the next water quality standards review proceeding which includes a public hearing and other public participation procedures in Ohio's continuing planning process.

(Note: This paragraph supersedes OAC 3745-1-09(A)(2)).

(3) High quality low-flow streams means that portion of a watercourse where:

(A) Section 120.45(E)(1) of this rule is met,

(B) Water quality criteria supportive of the use designation warmwater habitat or higher are met presently in the stream, and/or

(C) A diverse aquatic community exists in the stream as determined by the Director.

(Note: This paragraph supersedes OAC 3745-1-09(B))

(4) Water courses determined to be of high quality under paragraph (3) of this subsection shall be maintained at their present quality until such waters are reclassified to another use designation through the water quality standards revision procedure of the Ohio continuing planning process. Mixing zone requirements as established in OAC 3745-1-06 shall not apply to such streams. Instead, ambient water quality shall be maintained at all points in the stream until a mixing zone is formally established by the Director through a process which includes a public hearing.

(Note: This paragraph supersedes OAC 3745-1-09(C))

3745-1-10 CONDITIONS FOR EXCEPTIONS

(A) The water quality standards set forth in Chapter 3745-1 of the Ohio Administrative Code shall not apply in any of the following circumstances:

(1) Whenever the flow falls below the annual minimum 7 day average flow that has a recurrence period of once in ten years taking into account hydraulically altered flow regimes, calculated by the methods described in H.C Riggs, "Techniques of Water-Resources Investigation of the United States Geological Survey," Chapter B 1, Low-Flow Investigation (Washington, D C , 1972)

~~(2) Whenever the flow rises above the flow which is exceeded 10 per cent of the time.~~

(3) Whenever chemicals are applied for control of aquatic plants or animals Notice must be given to the Director before chemicals are applied The Director, upon receiving such notice, may order that chemicals not be applied if he concludes that the proposed application would pose an unreasonable danger to human or aquatic life This exemption shall apply only to the water quality standard or standards that would or might be violated by application of said chemicals, and shall not apply to any other standards

~~(4) Whenever uncontrollable accidents to a sewer or wastewater treatment system occurs. Notification must be given to the Ohio EPA within one hour of time of discovery.~~

~~(5) Whenever dredging or construction activities occur or during the period of time when the aftereffects of dredging or construction activities degrade water quality and such activities have been authorized by the United States Army Corps of Engineers.~~

~~(B) All exceptions will apply only to the specific water quality criteria involved in each case for a reasonable period of time as determined by the Director.~~

~~(C) Best management practices will be required during any such exemption from water quality standards in order to minimize damage to the environment~~

(g) Ohio Administrative Code 3745-1-10 Conditions for Exceptions-

(1) paragraphs (A)(2), (A)(4), (A)(5), (B) and (C) of the Code are null and void;

(2) no exception to meeting water quality standards due to low flows shall be recognized when the cause of the low flow is a State-operated or State-regulated water project which artificially reduces the flow rate to less than the naturally occurring 7Q10 or other established minimum flow.

(3) The following provisions shall be applied by Ohio as if part of OAC 3745-1-10.

(A) Whenever dredging, construction activities or discharge of dredged or fill material occur, or during the period of time when the effects of prior dredging, construction activities or discharge of dredged or fill material degrade water quality outside of a mixing zone; such activities have been permitted by the U.S. Army Corps of Engineers; and the temporary variance to the standards has been evaluated and the environmental impacts determined acceptable in either a negative declaration or an impact statement prepared pursuant to the National Environmental Policy Act (42 U.S.C. 4321 et seq.), then the provisions of OAC 3745-1-06 to 09 shall not apply.

(Note: This paragraph supersedes OAC 3745-1-10(A)(5))

(B) All exceptions will apply only to the specific water quality criteria involved in each case and only for a reasonable period of time as determined by the Director. However, for the purpose of applying the low flow exception to water quality standards, a reasonable period of time is that period when the flow rate is less than the minimum seven consecutive day average flow with a recurrence frequency of once in ten years.

(Note: This paragraph supersedes OAC 3745-1-10(B))

(C) Best management practices, including those defined in statewide or areawide water quality management plans developed under section 208 of the Clean Water Act, shall be required during such exemption from water quality standards in order to minimize damage to the environment.

(Note: This paragraph supersedes OAC 3745-1-10(C))

3745-1-11 LAKE ERIE STANDARDS

(B) MIXING ZONE

(1) Non-Thermal

For Lake Erie, outside of the excepted areas established in Division (C) of this rule, the following criteria will apply:

(a) Except as subsequent provisions of this section provide different limits, no mixing zone shall:

(1) interdict the mouth of a stream, thereby blocking any portion of it; or

(2) interdict the migratory routes or interfere with natural movements, survival, reproduction, growth, or increase the vulnerability to predation of any representative aquatic species; or

(3) include spawning or nursery areas of any representative aquatic species; or

(4) include a public water supply intake; or

(5) include any bathing area where bath houses and/or lifeguards are provided;

(6) contact the shoreline, whenever such contact can be avoided

~~(b) At least 90 percent of the volume of the mixing zone shall not exceed at any time the 24 to 96 hour LC_{50} for any representative aquatic species, as determined by static bioassays for persistent toxicants and dynamic bioassays for non-persistent toxicants in accordance with methods described in "Standard Methods for the Examination of Water and Wastewater," 15th Edition, 1975 published by the American Public Health Association, American Water Works Association and the Water Pollution Control Federation~~

(2) Thermal

~~(a) A thermal mixing zone to permit dilution and cooling of a waste heat discharge shall be considered a region in which organism response to temperature is time dependant. Exposure to temperatures in a thermal mixing zone shall not cause an irreversible response which results in deleterious effects to the wildlife and aquatic life representative of the receiving waters. The daily~~

(h) Ohio Administrative Code 3745-1-11 Lake Erie Standards -

(1) The following paragraphs of the cited Ohio Administrative Code section are null and void: (B)(1)(b), (B)(2)(a), (B)(2)(b), (B)(2)(C), (B)(2)(d), and Table 7d;

(2) The following provisons shall be applied by Ohio as if part of OAC 3745 -1- 11:

(A) The waters of the mixing zone shall not exceed at any time the 96 hour LC50 for any representative aquatic species, as determined from existing scientific literature, or the 96 hour LC50 for any representative aquatic species, as determined by static bioassays for persistent toxicants and flow-through bioassays for non-persistent toxicants in accordance with methods described in "Methods of Acute Toxicity Tests of Fish, Macroinvertebrates and Amphibians" (EPA publication 660/3-75-009). In addition, no conditions within the mixing zone shall exist which result in the bioconcentration or bioaccumulation of materials at levels which may be harmful to aquatic organisms or their consumers. Subject to paragraph (C) below, a mixing zone shall not exceed 23 acres in area.

(Note: This paragraph supersedes OAC 3745-1-11(B)(1)(b))

(B) A thermal mixing zone to permit dilution and cooling of a waste heat discharge, shall be considered a region in which organism response to temperature is time dependent. Exposure to temperature in a thermal mixing zone shall not cause an irreversible response which results in deleterious effects to the wildlife and aquatic life representative of the receiving waters.

(Note: This paragraph supersedes OAC 3745-111(B)(2)(a)).

3745-1-11 LAKE ERIE STANDARDS

~~average temperature in a thermal mixing zone at the point nearest to the discharge that is accessible to the resident aquatic organisms shall not exceed the temperatures in Table 7d at the corresponding ambient temperature. at ambient temperatures of 59°F (15°C) and above the daily average temperature in a thermal mixing zone will be determined on a case-by-case basis~~

~~(b) Thermal mixing zone size limitations shall be established by the Director pursuant to Section (B)(2)(a) of this rule on a case-by-case basis for all point source discharges subject to permit.~~

~~(c) Except as Divisions (B)(2)(a) and (B)(2)(b) of this rule establish different limitations, no thermal mixing zone shall:~~

~~(1) interdict the migratory routes or interfere with natural movements, survival, reproduction, growth, or increase the vulnerability to predation of any representative aquatic species;~~

~~(2) interfere with or prevent the recovery of an aquatic community or species population that could reasonably be expected as previously limiting water quality conditions improve;~~

~~(3) include a public water supply intake, or;~~

~~(4) include any bathing area where bath houses and/or life guards are provided~~

~~(d) Closed cycle cooling blowdown discharge will be exempt from Divisions (B)(2)(a) and (b) of this rule~~

(C) Thermal mixing zone size limitations shall be established by the Director pursuant to OAC 3745-1-11(1) and subparagraph (A) and (B) of this paragraph on a case-by-case basis for all thermal point source discharges subject to a NPDES permit. However, thermal mixing zone shall not exceed 23 acres in area, except that a larger thermal mixing zone which will not adversely affect the uses of the receiving water may be demonstrated in accordance with Section 316 of the Clean Water Act.

(Note: This paragraph supersedes OAC 37451-11(B)(2)(b)).

2745 1-11 LAKE ERIE STANDARDS

Table ~~7d~~: ~~Daily average temperatures of thermal mixing zones at~~ corresponding ~~ambient temperatures. Shown as degrees Fahrenheit and (celsius)~~

Ambient	Daily Average Temperature	Ambient	Daily Average Temperature
~~32(0)~~	~~41(5.0)~~	~~46(7.8)~~	~~65(18.3)~~
~~33(0.6)~~	~~41(5.0)~~	~~47(8.3)~~	~~66(18.9)~~
~~34(1.1)~~	~~43(6.1)~~	~~48(8.9)~~	~~68(20.0)~~
~~35(1.7)~~	~~45(7.2)~~	~~49(9.4)~~	~~70(21.1)~~
~~36(2.2)~~	~~46(7.8)~~	~~50(10.0)~~	~~71(21.7)~~
~~37(2.8)~~	~~48(8.9)~~	~~51(10.6)~~	~~73(22.8)~~
~~38(3.3)~~	~~50(10.0)~~	~~52(11.1)~~	~~75(23.9)~~
~~39(3.9)~~	~~52(11.1)~~	~~53(11.7)~~	~~77(25.0)~~
~~40(4.4)~~	~~53(11.7)~~	~~54(12.2)~~	~~78(25.6)~~
~~41(5.0)~~	~~55(12.8)~~	~~55(12.8)~~	~~80(26.7)~~
~~42(5.6)~~	~~57(13.9)~~	~~56(13.3)~~	~~82(27.8)~~
~~43(6.1)~~	~~59(15.0)~~	~~57(13.9)~~	~~84(28.9)~~
~~44(6.7)~~	~~61(16.1)~~	~~58(14.4)~~	~~86(30.0)~~
~~45(7.2)~~	~~62(16.7)~~	~~59(15) and above daily average limit will be determined on a case-by-case basis.~~	

BILLING CODE 6560-01-C

Appendix B—Excerpts From United States Environmental Protection Agency Washington, D.C.

Decision of the General Counsel on Matters of Law Pursuant to 40 CFR 125.36(m)

In reaching this conclusion, I do not mean to suggest that all variance procedures contained in State water quality standards are illegal and unacceptable under the FWPCA. In Decision of the General Counsel #44, I specifically considered the question of an Illinois variance procedure. The Illinois procedure allowed for a limited exception to meeting a water quality standard upon a showing that compliance "would impose an arbitrary or unreasonable hardship." In my decision, I held that EPA would not itself provide for the hearing to determine whether a discharger qualified for such a variance, but would incorporate a State-determined variance in an NPDES permit.

It is important to distinguish the type of variance in Illinois from the variance presented by this case. Section 101(a)(2) of the FWPCA sets as an interim goal the achievement of water quality wherever attainable, that provides for the "protection and propogation of fish, shellfish, and wildlife and provides for recreation in and on the water" by July 1, 1983. In order to attain this goal, EPA has required States to set their water quality standards at such levels "wherever attainable." EPA regulations provide that "in determining whether such standards are attainable for any particular segment, the State should take into consideration environmental, technological, social, economic, and institutional factors." 40 CFR 130.17(c)(1). EPA's regulation are more specific in regard to downgrading existing water quality standards. Standards may be lowered only when the State can demonstrate that one of three factural situations exists:

(i) The existing designated use is not attainable because of natural background;

(ii) The existing designated use is not attainable because of irretrievable man-induced conditions; or

(iii) Applications of effluent limitations for existing sources more stringent than those required pursuant to Section 301(b)(2)(A) and (B) of the act in order to attain the existing designated use would result in substantial and widespread adverse economic and social impact.

Thus, under these regulations, a State may downgrade a water quality standard for a particular stream segment if attaining the standard will require treatment in excess of best available technology ("BAT") for industrial point sources of best practicable waste treatment technology ("BPWTT") for publicly-owned treatment works, and such additional treatment would result in "substantial and widespread" impact.

A number of States, however, have adopted a some what different approach. Rather than downgrading the standard for an entire stream, or stream segment, some States have maintained the standard, but provided that individual dischargers may receive variances for a limited time period from meeting the standards. This approach appears to be preferable environmentally. The more stringent standard is maintained and is binding upon all other dischargers on the stream or stream segment. Even the discharger who is given a variance for one particular constituent (e.g., chloring) will be required to meet the applicable criteria for other constituents. The variance is given for a limited time period and the discharger must either meet the standard upon the expiration of this time period or must make a new demonstration of "unattainability."

EPA will accept such variance procedures as part of State water quality standards as long as they are consistent with the substantive requirements of 40 CFR 130.17. Therefore, variances can be granted by States only when achieving the standards is "unattainable." In demonstrating that meeting the standard is unattainable, the State must demonstrate that treatment in excess of that required pursuant to Section 301(b)(2)(A) and (B) of the Act is necessary to meet the standard and must also demonstrate that requiring such treatment will result in substantial and widespread economic and social impact which exceeds the positive economic and social impact of enhanced water quality. EPA Regional Administrators should not accept State variance determinations unless they are accompanied with an adequate record to support the determinations.

The justification submitted by the State should include documentation that treatment more advanced than that required by Sections 301(b)(2)(A) and (B) has been carefully considered and that alternative effluent control strategies have been evaluated.

Since State variance proceedings involve revisions of water quality standards, they must be subjected to public notice, opportunity for comment, and public hearing. (See Section 303(c)(1) and 40 CFR 130.17(a)). The public notice should contain a clear description of the impact of the variance upon achieving water quality standards in the affected stream segment.

Total maximum daily loads included in any plan prepared pursuant to Sections 208 or 303(d) and (e) must be adjusted to reflect the variance. The granting of a variance to any one discharger should not affect the load allocations or effluent limitations required for other dischargers on the stream segment.

[FR Doc. 79-20334 Filed 7-5-79; 8:45 am]
BILLING CODE 6560-01-M

FEDERAL EMERGENCY MANAGEMENT AGENCY

[44 CFR Part 67]

[Docket No. FI-5613]

Proposed Flood Elevation Determinations for the City of Rocky River, Cuyahoga County, Ohio Under the National Flood Insurance Program

AGENCY: Office of Federal Insurance and Hazard Mitigation, FEMA.

ACTION: Correction of proposed rule.

SUMMARY: The notice published on March 17, 1978, at 43 FR 11507 in the Federal Register and in the *Sun Herald* on December 29, 1977, and January 5, 1978, should be corrected to read as follows:

Technical information or comments are solicited on the proposed base (100-year) flood elevations listed below and proposed changes to base flood evaluations for selected locations in the City of Rocky River, Cuyahoga County, Ohio.

These base (100-year) flood elevations are the basis for the flood plain management measures that the community is required to either adopt or show evidence of being already in effect in order to qualify or remain qualified for participation in the National Flood Insurance Program (NFIP).

The period for comment will be ninety (90) days following the second publication of this proposed rule in a newspaper of local circulation in the above-named community.

ADDRESSES: Maps and other information showing the detailed outlines of the flood-prone areas and the proposed base (100-year) flood evaluations are available for review at the Rocky River City Hall. Send comments to: The Honorable Earl Martin, Mayor of Rocky River, 20200 Karmer Drive, Rocky River, Ohio 44116.

FOR FURTHER INFORMTION CONTACT: Mr. Richard Krimm, National Flood Insurance Program, (202) 755–5581 or Toll Free Line (800) 424–8872, Room 5270, 451 Seventh Street, SW., Washington, D.C. 20410.

SUPPLEMENTARY INFORMATION: The Federal Insurance Administrator gives notice of the proposed determinations of base (100-year) flood elevations for the City of Rocky River, Cuyahoga County, Ohio, in accordance with Section 110 and Section 206 of the Flood Disaster Protection Act of 1973 (Pub. L. 93–234), 87 Stat. 980, which added section 1363 to the National Flood Insurance Act of 1968 (Title XIII of the Housing and Urban Development Act of 1968 (Pub. L. 90–448), 42 U.S.C. 4001–4128, and 44 CFR 67.4(a).

These elevations, together with the flood plain management measures required by § 60.3 of the program regulations, are the minimum that are required. They should not be construed to mean the community must change any existing ordinances that are more stringent in their flood plain management requirements. The community may at any time enact stricter requirements on its own, or pursuant to policies established by other Federal, State, or regional entities. These proposed elevations will also be used to calulate the appropriate flood insurance premium rates for new buildings and their contents and for the second layer of insurance on existing buildings and their contents.

The proposed base (100-year) flood elevations for selected locations are:

Source of flooding	Location	Elevation in feet, national geodetic vertical datum
Lake Erie	Western Corporate Limits to mouth of Rocky River.	576
Rocky River	Mouth of Rocky River	576
	Lake Road	576
	Norfolk and Western Railroad (Downstream).	578
	Detroit Road (Upstream)	579
	5,500' downstream of Interstate Route 90.	590
	Interstate Route 90 (Downstream).	597
	Corporate Limits	598
Spencer Creek	Mouth of Spencer Creek	576
	West Lake Road (Downstream).	582
	100' upstream of Norfolk and Western Railroad.	620
	280' upstream of Interstate Route 90.	630
	Harwick Court	634
	Detriot Road (State Route 254).	646
	1,350' downstream of Hillard Boulevard.	661
	Hillard Boulevard	686
	Center Ridge	693

(National Flood Insurance Act of 1968 (Title XIII of Housing and Urban Development Act of 1968), effective January 28, 1969 (33 FR 17804, November 28, 1968), as amended; 42 U.S.C. 4001–4128; Executive Order 12127, 44 FR 19367; and delegation of authority to Federal Insurance Administrator 44 FR 20963).

Issued: June 15, 1979.

Gloria M. Jimenez,

Federal Insurance Administrator.

[FR Doc. 79-20716 Filed 7-5-79; 8:45 am]

BILLING CODE 4210-23-M

NATIONAL FOUNDATION ON THE ARTS AND THE HUMANITIES

[45 CFR Part 1110]

Nondiscrimination in Federally Assisted Programs of the National Endowment for the Arts; Civil Rights Guidelines

AGENCY: National Endowment for the Arts.

ACTION: Proposed Civil Rights Guidelines for Implementing Title VI of the Civil Rights Act of 1964, Section 504 of the Rehabilitation Act of 1973 (nondiscrimination against handicapped person), and Title IX of the Education Amendments of 1972.

SUMMARY: The National Endowment for the Arts is responsible for assuring that programs and activities receiving Endowment financial assistance are conducted in a manner free from unlawful discrimination. The purpose of these guidelines is to set forth procedures to be followed in determining whether recipients of Endowment financial assistance are complying with the standards, policies, and requirements designed to ensure that all persons have equal access to the services and benefits of Endowment programs. Also, section 42.410 of Department of Justice guidelines regarding implementation of Title VI of the Civil Rights Act of 1964 requires this establishment of Title VI compliance program by State agencies administering federally assisted programs. The proposed guidelines should provide assistance to state arts agencies in meeting their responsibilities under Title VI, and other civil rights statutes relevant to federally assisted programs, i.e., Section 504 of the Rehabilitation Act of 1973 (nondiscrimination against handicapped person), and Title IX of the Education Amendments of 1972. Comments and suggestions regarding the guidelines from any other federal agency or interested organization will be welcomed and appreciated.

DATES: Comments must be received on or before August 15, 1979.

ADDRESSES: Comments should be addressed to Susan Liberman, Assistant to the General Counsel, National Endowment for the Arts, 2401 E Street, N.W., Washington, D.C. 20506.

FOR FURTHER INFORMATION CONTACT: Susan Liberman, Assistant to the General Counsel, National Endowment for the Arts, 2401 E Street, N.W., Washington, D.C. 20506, (202) 634–6588.

Dated: June 14, 1979.

Robert Wade,

General Counsel, National Endowment for the Arts.

Civil Rights Guidelines

National Endowment for the Arts

Table of Contents

Part I—GENERAL

1. Purpose
2. Scope
3. Kinds of Discrimination Prohibited
4. Prevention of Discrimination by State Arts Agencies
5. Delegation of Title VI Authority

Part II—CIVIL RIGHTS REQUIREMENTS FOR PROJECT APPROVAL

6. General
7. Overview of Civil Rights Requirements
8. The General Assurance Requirement
9. Information Required about Applicant's Civil Rights Status
10. Nondiscrimination Covenants in the Case of Real Property
11. Requirement for Dissemination of Project Civil Rights Information to the Public

Part III—POST-APPROVAL COMPLIANCE

12. Introduction
13. Retention of Records and Access to Information
14. Compliance Reviews
15. Complaints
16. Formal Enforcement Proceedings

National Endowment for the Arts Civil Rights Guidelines

Part I. GENERAL

1. Purpose

The National Endowment for the Arts is responsible for assuring that programs and activities receiving Endowment financial assistance are conducted in a manner free from unlawful discrimination. The purpose of these guidelines is to set forth procedures to be followed in determining whether recipients of Endowment financial assistance are complying with the standards, policies, and requirements designed to ensure that all persons have equal access to the services and benefits of Endowment programs. These guidelines are based on, and issued

under authority of, the following statutes and regulations:

(1) Title VI of the Civil Rights Act of 1964 (42 U.S.C. 2000d—2000d 4). Section 601 of Title VI provides that no person, on the ground of race, color, or national origin, shall be excluded from participation in, be denied the benefits of, or be subjected to discrimination under any program or activity receiving federal financial assistance.

(2) Title IX of the Education Amendments of 1972 (20 U.S.C. 1618–1686). Section 1681 provides that, with certain exceptions, no person, on the basis of sex, shall be excluded from participation in, be denied the benefits of, or be subjected to discrimination under any education program or activity receiving federal financial assistance.

(3) Section 504 of the Rehabilitation Act of 1973 (29 U.S.C. 794). Section 504 prohibits discrimination against handicapped persons on the basis of physical or mental handicap in federally assisted programs.

(4) Executive Order 11246, as amended. This executive order provides that federal contractors or federally assisted contractors shall not discriminate on the basis of race, color, religion, sex, or national origin.

(5) Age Discrimination Act of 1975 (42 U.S.C. 6101–6107). Section 6101 prohibits unreasonable discrimination in all federally funded programs on the basis of an individual's age.

2. Scope

A. These guidelines apply to all applicants and recipients of Endowment financial assistance. The type of assistance subject to the guidelines includes any benefit to the operation or activity of a recipient including cash, goods, services, equipment and transferral of real and personal property. The guidelines do not apply to any federal financial assistance by way of insurance or guaranty contracts. The guidelines also do not apply to assistance to any individual who is the ultimate beneficiary of a program, e.g., recipients of Endowment fellowship awards who are not responsible for passing on the benefits of Endowment assistance to others.

B. The guidlines' coverage of a recipient's employment practices is somewhat limited. Specifically, the guidelines would apply to an organization's employment practices where a primary objective of the federal financial assistance is a program to provide employment. In that event a recipient may not directly or through contractual or other arrangements subject an individual to discriminatory employment practices in recruitment, advertising, employment, layoff or termination, upgrading, demotion, or transfer, rates of pay or other forms of compensation. also, where a primary objective of the federal financial assistance is not to provide employment, but discrimination in the employment practices of the recipient tends to result in discrimination in the provision of services to intended program beneficiaries these guidelines shall apply.

C. The following is a list of current Endowment programs subject to these guidelines:

(1) Assistance to groups for projects and productions and exhibitions in the arts.

(2) Surveys, research and planning in the arts.

(3) Assistance to State Arts Agencies for projects and productions in the arts.

(4) Assistance to promote the interchange of information and appreciation in the arts.

(5) Assistance to groups in order to encourage new and increased sources of contributed income on a continuing basis to the nation's cultural institutions.

3. Kinds of Discrimination Prohibited in Projects and Activities Receiving Endowment Financial Assistance

A. Recipients either directly or through contractual means, on the basis of race, color, national origin, sex, handicap, or age, shall not, in connection with an Endowment assisted program or activity:

(1) Deny an individual any service or benefit provided under the program.

(2) Provide a service or benefit to an individual which is inferior either in quantity or quality to that provided to others in the program.

(3) Provide an individual with a service or benefit in a manner different from that provided to others under the program.

(4) Subject an individual to segregation in any manner related to the receipt of services or benefits under the program.

(5) Subject an individual to separate treatment in any manner related to receiving services or benefits under the program.

(6) Restrict an individual in any way in the receipt of any advantage or privilege enjoyed by others under the program.

(7) Require different standards or conditions as a prerequisite for accepting an individual into a program.

(8) Deny a person the opportunity to participate as a member of a planning or advisory body which is an integral part of the program, solely because of his or her race, color, national origin, sex, handicap, or age.

(9) Utilize criteria or methods of administration which have the effect of subjecting individuals to discrimination or operate to defeat or substantially impair the accomplishment of the objectives of the program.

(10) In determining the site or location of facilities, make selections with the purpose or effect of excluding individuals from, denying them the benefits of, or subjecting them to discrimination under any program to which the guidelines apply.

(11) Fail to provide service or information in a language other than English when significant numbers of potential or actual beneficiaries are of limited English speaking ability.

(12) Fail to advise the population eligible to be served or benefited by the program of the existence of the program.

B.There are many ways prohibited discrimination can occur in Endowment projects. Illustrative examples with respect to discrimination on the basis of handicap are provided at 45 CFR 1151.18 of Endowment Section 504 regulations.

4. Prevention of Discrimination by State Arts Agencies

A. State Arts Agencies, as recipients of Endowment financial assistance, and as agencies responsible for administering a continuing program which receives Endowment assistance play an important role in assuring compliance with federal civil rights laws and regulations. Under § 42.410 of Justice Department guidelines regarding Coordination of Enforcement of Nondiscrimination in Federally Assisted Programs (28 CFR 42.401–15), state agencies are required to establish Title VI compliance programs for themselves and their grantees. The Endowment encourages State Arts Agencies to utilize these civil rights guidelines as a basis for adopting standards and procedures to assure compliance with applicable civil rights laws and regulations.

B. Recommendations regarding actions to be taken by State Arts Agencies in connection with civil rights enforcement efforts are as follows:

(1) Each state establish civil rights compliance and enforcement procedures, including the designation of state personnel responsible for implementation of those procedures.

(2) Each state make available to the public through meaningful effort information about civil rights compliance and enforcement procedures.

(3) Each state agency disseminate to agency personnel and recipients the requirements and sanctions of the civil rights statutes covered by these guidelines.

(4) Each state revise and review eligibility requirements, grant agreements, assurance of compliance forms, report and evaluation forms to meet civil rights requirements.

(5) Each state establish forms and procedures to inform the National Endowment for the Arts of their civil rights compliance efforts, including regularly scheduled reports and maintenance of records.

(6) Each State Arts Agency collect data and information concerning minority participation in the arts including data regarding the racial composition of the population eligible to be served by state arts programs.

C. Several specific examples of actions to be taken by State Arts Agencies in carrying out enforcement and compliance programs are as follows:

(1) In the event a State Arts Aency provides financial assistance to a symphony orchestra for the purpose of giving free performances in public places, posters and other publicity for such events shall be distributed and displayed to all segments of the population. In addition, in order to broaden dissemination of information about the event, posters and publicity shall be in languages other than English for those in the population who would not otherwise be informed of the event.

(2) In the event a local theatre group applies to a State Arts Agency for financial assistance, the group shall provide with their application data regarding the population eligible to be served and information concerning the present or proposed membership of the group's planning or advisory board.

(3) In the event a dance company receives financial assistance from a State Arts Agency for a tour or programs, the performing group shall provide information indicating that the location of the performances are accessible to any person in the population, so that no person is denied access based on race, color, national origin, handicap or age.

(4) Where a local museum applies to a State Arts Agency for financial assistance for artistic teaching programs, the State Agency is responsible for assuring that the museum does not discriminate on the basis of race, color, national origin, sex, handicap or age, in connection with admission to the program.

5. Delegation of Title VI Authority

The National Endowment for the Arts and the National Endowment for the Humanities has assigned Title VI responsibility to the Department of Health, Education and Welfare with respect to elementary and secondary schools and school systems in connection with soliciting, receiving, and determining the adequacy of assurances of compliance, voluntary desegregation plans, and final court orders under 45 CFR 1110.4; mailing, receiving, and evaluating compliance reports under 45 CFR 1110.6(b); and, all other actions related to securing voluntary compliance, or related investigations, compliance reviews, complaints, and determinations of apparent failure to comply and resolutions of matters by informal means. The Endowments specifically reserved to themselves the responsibilities for the effectuation of compliance under 45 CFR 1110.8–1110.10.

Part II. CIVIL RIGHTS REQUIREMENTS FOR PROJECT APPROVAL

6. General

This part of the guidelines describes the civil rights eligibility requirements for Endowment financial assistance including the procedures, forms, conditions, and assurances that constitute civil rights compliance.

7. Overview of Civil Rights Requirements and Approval Process

A. A project gains and retains civil rights compliance approval on the basis of the Endowment's evaluation of the project's potential for discrimination. Using information supplied by the applicant and from independent inquiries as necessary, the program staff and grant panels, with the assistance of the Office of the Chairman's Representative for Minority Affairs, reviews how the benefits to be derived from the project or activity will be distributed to the community or area of impact. By studying the project's service area in relation to the size and location of the minority and handicapped population, it can be determined if project use and benefits are being made available and accessible in a nondiscriminatory manner.

B. To assist the Endowment in making these evaluations, all applicants must give a general assurance of their intentions to comply with civil rights requirements. Also, applicants should provide information about their past civil rights performance including information regarding any lawsuit or complaint filed against the applicant alleging discrimination and a statement describing any civil rights compliance reviews regarding the applicant conducted during the two-year period prior to submission of the application.

As further described below, applicants must agree to other special requirements such as disseminating information to the public about the project and cooperating with investigations.

C. Endowment approval of a project involves an overall evaluation of all of the above and a final judgment that the project will not have a discriminatory effect.

D. If the evaluation of an application indicates that the project may result in prohibited discrimination, the application will be returned to the applicant with an explanation of the problem. If feasible, when an application is returned, a civil rights specialist will assist the applicant in modifying the application to correct its discriminatory features.

8. The General Assurance Requirement

All applicants for Endowment assistance must submit with their application an assurance that they will comply with the nondiscrimination requirements of Title VI of the Civil Rights Act of 1964, Section 504 of the Rehabilitation Act of 1973, and where applicable, Title IX of the Education Amendments of 1972. This assurance is included in the guidelines for Endowment programs.

9. Information Required About Applicant's Civil Rights Status

A. All applicants will submit information concerning their civil rights status and involvement in any complaints, lawsuits, or other charges of discrimination.

B. The information required is the following:

(1) A narrative description of the status of any lawsuits or complaints alleging discrimination in employment, or in the provision of services, based on race, color, national origin, sex, handicap or age involving the applicant during the previous two years.

(2) A statement indicating any administrative findings of discrimination by a federal or state agency in employment, or the provision of services, based on race, color, national origin, sex, handicap or age during the previous two years.

(3) A statement giving the results of any civil rights compliance reviews of the applicant by a federal or state

agency which have been conducted during the previous two years. This statement will give the name of the agency conducting the review and the results of the review.

10. Nondiscrimination Covenants in the Case of Real Property

A. Whenever Endowment funds are used for the purchase of real property, an interest in real property, or structures or other improvements on real property, the instrument effecting or recording the purchase shall contain a covenant assuring nondiscrimination. The covenant shall run with the land for the period during which the real property is used for a purpose for which Endowment assistance is extended, or for another purpose involving the provision of similar benefits, or for as long as the recipient retains ownership or possession of the property, whichever is longer.

B. Where real property is improved with Endowment assistance, but no transfer of interest in the property is initially involved, the recipient of the assistance shall provide the Endowment with a written assurance that it will include a covenant similar to that of Section 10A above in any subsequent sale, lease, or other transfer of interest in the property.

11. Requirement for Dissemination of Civil Rights Information to the Public

A. All applicants are required to have an acceptable program of disseminating project information to the public. The purpose of this is to ensure that minorities, women, and handicapped persons are provided an equal opportunity to participate in Endowment assisted programs.

B. Information regarding nondiscrimination policies may be disseminated to the public in the following manner:

(1) State and federal civil rights guidelines may be distributed to and made available for use by State Arts Agency employees, applicants for federal financial assistance, recipients, beneficiaries and other interested persons.

(2) State and federal compliance programs, procedures and methods of enforcement may be made available to the public.

(3) State agencies and recipients shall, when feasible, display prominently in reasonable places posters which state that recipients operate programs subject to federal nondiscrimination requirements; summarize those requirements; and note the availability of Title VI, Section 504, and Title IX information from recipients and the state and federal agencies, and explain briefly the procedures for filing complaints.

(4) Information on civil rights requirements and procedures shall be contained in handbooks, pamphlets or other materials which are ordinarily distributed to the public to describe requirements for participation in such federally assisted programs.

(5) To the extent recipients are required by law or regulation to publicize program information in the news media, such publicity shall state that the program or activity prohibits discrimination on the ground of race, color, national origin, sex, handicap or age in accordance with federal law.

(6) Where a significant number or proportion of the population eligible to be served or likely to be directly affected by a federally assisted program needs service or information in a language other than English in order to be informed or participate in the program, the recipient shall take reasonable steps, considering the scope of the program and size and concentration of the population, to provide information in an appropriate language to such persons. This requirement applies to written material of the type which ordinarily is distributed to the public.

Part III. POST-APPROVAL COMPLIANCE

12. Introduction

This part of the Guidelines provides specific guidance to recipients regarding maintenance of records and actions to be taken by the Endowment in order to ensure compliance with civil rights requirements. This section will displace evaluation of reports, compliance reviews, and investigation of discrimination complaints.

13. Retention of Records and Access to Information

A. Recipients must retain appropriate information regarding participation of minorities, the handicapped, and where applicable, women, in Endowment supported programs and activities for the purpose of carrying out recipient's civil rights responsibilities and in order to provide the Endowment with required reporting documents. It should be noted that it is not illegal or improper to collect and maintain records including minority data provided the data is utilized to further nondiscriminatory policies and practices.

B. Each recipient shall permit responsible Endowment officials access to its facilities, and to books, and any other sources of information, as necessary to ascertain compliance.

14. Compliance Reviews.

A. *Reasons for Conducting On-Site Compliance Reviews*

In accordance with Endowment regulations, a responsible agency official shall from time to time review the practices of recipients in order to determine whether they are complying with Endowment regulations. An on-site review may be necessary in case of the following:

(1) An increase in the number of complaints against a particular program or type of organization is received by the Endowment.

(2) An indication of discrimination in State Arts Agency programs becomes apparent.

(3) Other governmental agencies inform the Endowment of possible discrimination by a recipient.

(4) The Endowment becomes aware of any infomation indicating possible noncompliance and the problem cannot be resolved satisfactorily by the recipient through other means.

B. *Notification of Review Visit.*

If it is determined that an on-site compliance review will be conducted, a letter of notification stating when it is scheduled and the names of those who will conduct it will be sent to the recipient.

C. *On-Site Support Required to be Furnished.*

It will be the responsibility of the recipient to provide an adequate work space with a telephone for the civil rights specialist to use for the scheduling and conducting of interviews. The review will normally take from one to three days depending upon its complexity.

D. *On-Site Review Components.*

The on-site review will consist of, but not be limited to, the following:

(1) Interviews with employees and management.

(2) Detailed inspection of files, records, and the physical premises.

(3) Meetings with other government agencies, community civic leaders, local civil rights organizations, minority leaders, women's groups, and organizations representing handicapped persons.

(4) A close-out interview with officials of the organization to discuss significant findings and recommendations.

E. *Compliance Determination that Minor Deficiencies Exist.*

If the investigation reveals minor deficiencies in the delivery of project benefits, and the recipient agrees to

correct them within thirty days, no recommendation of a finding of noncompliance will be made at that time. Minor deficiencies will be handled informally by the Office of the Chairman's Representative for Minority Affairs and a recommenation of a finding of compliance will be made if the deficiencies are corrected. However, in the event the recipient fails to correct the deficiency, a finding of non-compliance will be recommended, and it will be handled as a major noncompliance problem in accordance with the following Section 14F.

F. *Compliance Determination that Major Deficiencies Exist.*

When the deficiency is major and cannot be corrected quickly by the recipient it will be necessary for the Office of the Chairman's Representative for Minority Affairs to make a formal recommendation of noncompliance to the Office of the General Counsel. Formal findings of noncompliance will be handled in accordance with the procedures outlined in the National Foundation on the Arts and the Humanities' Title VI regulations. These procedures provide for final attempts at informal negotiation and, if necessary, formal enforcement proceedings. See Section 16 below.

G. *Corrective Action Agreements.*

Whenever the Endowment and the recipient being reviewed can reach agreement about findings of deficiency and acceptable corrective action, the details and terms should be put in writing and signed by all parties. Such a "corrective action agreement" should be completed at, or as soon as possible after, the close-out interview. The Endowment's request that a recipient sign a corrective action agreement is not a formal determination of violation of a civil rights law covered by these guidelines or an admission of violation.

H. *Report of Compliance Review.*

A written report of all on-site compliance reviews will be prepared within fifteen (15) days after completion of the review. The report will discuss the major area of concern in the investigation, will include findings and recommendations, and will indicate whether or not the recipient reviewed was found to be in compliance with Endowment civil rights requirements.

15. Complaints

A. *Filing Discrimination Complaints.*

(1) Whenever an individual believes that he or she or a group of individuals of which he or she is a member has been discriminated against by a recipient, he or she may file, directly or through a legal representative, a written complaint with the Endowment's General Counsel's Office. The complaint should describe the alleged discrimination in detail and should include the exact circumstances, dates, and names of those involved.

(2) Complaints must be filed within 180 days of the date of the alleged discrimination. If requested, the Endowment may extend this deadline in particular cases.

(3) The identity of complainants will be kept confidential except to the extent necessary to carry out properly any investigation, hearing, judicial proceedings or other proceedings that may arise in connection with the complaint.

B. *Intimidation and Retaliation Prohibited.*

A recipient may not intimidate, threaten, coerce, retaliate against, or discriminate against any person because he or she has made a complaint, testified, assisted, or participated in any manner in an investigation.

C. *Investigation*

(1) The Endowment's Office of the Chairman's Representative for Minority Affairs will investigate all complaints within the agency's statutory jurisdiction which have been filed in a timely manner (see Section 15A(2) above), and are judged to merit an investigation as determined by a preliminary review.

(2) The purpose of the complaint investigation is to determine if the federally assisted complaint respondent is adhering to the laws that prohibit discrimination in the providing of benefits and where applicable, in employment. In order to make such a determination, the investigator will interview personnel, take testimony, review records and data, and make whatever other inquiries may be necessary.

(3) When an investigation reveals possible discrimination, the investigator, prior to a formal finding by the Endowment will attempt to negotiate an informal resolution acceptable to both the complainant and the respondent. If the negotiation is successful, the terms of the resolution will be reduced to writing (the "conciliation agreement"), and all parties will sign it and receive a copy. The conciliation agreement will become a part of the investigative report and must be submitted to the Office of the General Counsel for approval.

(4) In the event the investigation reveals no discrimination, the investigation report will be sent to the Office of the General Counsel for careful review and a final disposition. The Endowment formally will notify all involved parties of the final disposition as soon as possible.

(5) Where there is an indication of discrimination without a negotiated resolution, the complaint and investigative report will be submitted to the Office of the General Counsel for a final finding of compliance or noncompliance. If it is determined that the recipient is in noncompliance, the Office of the Chairman's Representative for Minority Affairs may initiate informal conciliation efforts. If these efforts are unsuccessful, the Endowment will institute formal enforcement proceedings as described in Section 16 below.

16. Formal Enforcement Proceedings

In the event it is determined that noncompliance or threatened noncompliance with Endowment civil rights regulations cannot be corrected by informal means, compliance will be effected in accordance with the procedures outlined in the National Foundation on the Arts and the Humanities' Title VI regulations, 45 CFR 1110.8–11. These procedures may lead to suspension or termination of assistance, or to any other means of enforcement authorized by law.

[FR Doc. 79-20941 Filed 7-5-79; 8:45 am]
BILLING CODE 7537-01-M

FEDERAL COMMUNICATIONS COMMISSION

[47 CFR Part 64]

[Docket No. 20828; FCC 79-307]

Second Computer Inquiry; Tentative Decision and Further Notice of Inquiry and Rule Making

AGENCY: Federal Communications Commission.

ACTION: Tentative Decision and Further Notice of Inquiry and Rulemaking.

SUMMARY: This Tentative Decision amends 47 CFR 64.702 and establishes a resale structure for provision of computer processing services. The Further Notice of Inquiry and Rulemaking solicits comments on the nature and degree of regulation to be exercised over "enhanced non-voice" communications services and customer-premises equipment. The effect of the Decision and Further Notice is to foster a regulatory environment conducive to the stimulation of economic activity in the regulated communications sector with respect to the provision of new and innovative communications-related offerings and to enable the

communications user to optimize his use of common carrier communication facilities and services by taking advantage of the ever increasing market applications of computer processing technology.

DATES: Comments must be received on or before August 30, 1979, and Reply Comments must be received on or before October 1, 1979.

ADDRESSES: Federal Communications Commission, 1919 M Street, N.W., Washington, D.C. 20554.

FOR FURTHER INFORMATION CONTACT: H. Russell Frisby, Jr., Policy and Rules Division, Common Carrier Bureau, (202) 632-9342.

In the matter of Amendment of § 64.702 of the Commission's Rules and Regulations (Second Computer Inquiry) published for comment on Thursday, July 7, 1977 [42 FR 34896]; Docket No. 20820; Tentative Decision and Further Notice of Inquiry and Rulemaking; Adopted: May 17, 1979; Released: July 2, 1979; By the Commission: Commissioners Washburn and Fogarty issuing separate statements.

Table of Contents

	Paragraphs
I. Background:	
A. First Computer Inquiry	2-9
B. Second Computer Inquiry	10-17
II. Comments:	18
A. User Needs and Regulation	19-23
B. Maximum Separation	24-26
C. Definitional Approach	27-44
D. Customer-Premises Equipment	45-52
E. Consent Decree	53-56
F. Legislation	57-58
III. Tentative Decision:	
A. Summary	59-64
B. Service Structure	65-76
C. Definitional Structure for Distinguishing "Enhanced Non-Voice" Network Services	77-88
D. Electronic Message Services	89-90
E. Customer-Premises Equipment	91-123
F. Maximum Separation Policy	123-133
G. Regulatory Flexibility	134
H. 1956 AT&T Consent Decree	135-148
IV. Further Notice of Inquiry and Rulemaking:	
A. Introduction	149-150
B. Regulatory Implications of the Tentative Decision	151-160
C. Alternative Means of Addressing the Regulatory Implications of the Tentative Decision.	161-164
D. Options in Reaching a Final Decision	165-166
E. Items of Inquiry	167-168
V. Conclusion	169-174

1. Under consideration are issues addressed in our *Notice of Inquiry and Proposed Rulemaking (Notice)* and *Supplemental Notice of Inquiry and Enlargement of Proposed Rulemaking (Supplemental Notice)* released on August 9, 1976 and March 8, 1977, respectively.[1] This proceeding, commonly referred to as the "Second Computer Inquiry," focuses on various regulatory issues emanating from the greater utilization of computer processing technology by communications common carriers and the need to distinguish between regulated communication offerings and unregulated data processing services.

I. Background

A. First Computer Inquiry

2. More than a decade ago, an inquiry was commenced which addressed the regulatory and policy problems raised by the interdependence of computer services and technology and communications facilities and services of communications common carriers. In that proceeding, commonly referred to as the *"First Computer Inquiry,"*[2] information was sought regarding actual and potential computer uses of communications facilities and services. We attempted to develop views and and recommendations as to whether there was any need for new or improved common carrier service offerings, or for revised rates, regulations, and practices of carriers to meet the emerging communication requirements for the provision of data processing or other computer services involving the use of communication facilities. We further sought to determine whether such services should be free from, or subject to, government regulation and whether entry into the provision of such computer services by common carriers and others required regulatory control.

3. It was alleged at that time that common carriers were about to offer data processing services and that unregulated entities were offering communication services. This raised a number of issues. A major regulatory concern of the Commission was the appropriateness of a carrier utilizing part of its communications switching plant to offer a data processing service. Further, there was the issue of whether communications common carriers should be permitted to sell data processing services, and if so, what safeguards should be imposed to insure that the carriers would not engage in anti-competitive or discriminatory practices. There was also concern as to the extent to which data processing organizations should be permitted to sell communications as part of a data processing package not subject to regulation. Two basic regulatory and policy questions had to be resolved: (a) The nature and extent of the regulatory jurisdiction which could and should be applied to data processing services, and (b) whether, under what circumstances, and subject to what conditions or safeguards, common carriers should be permitted to engage in data processing.

4. Looking to the basic purpose of our regulatory authority, as well as specific statutory guidelines, we determined not to assert regulatory authority over data processing services, whether or not such services employed communications facilities in order to link the terminals of the subscribers to centralized computers.[3] We recognized, however, that provision of data processing services by common carriers might give rise to certain regulatory problems. Primarily, we were concerned about the possibility that common carriers might favor their own data processing activities through cross-subsidization, improper pricing of common carrier services, and related anti-competitive practices which could result in burdening or impairing the carrier's provision of its other regulated services. We therefore adopted a policy of maximum separation whereby communications common carriers would be required to furnish data processing services only through separate corporate entities. § 64.702 of the Commission's *Rules and Regulations* was adopted to implement this maximum separation policy.[4]

5. Our policy of regulatory forbearance with respect to data processing services and the requirement that carriers provide data processing services through unregulated corporate entities, made it necessary to distinguish the regulated communications services from unregulated data processing services. Accordingly, in the *First Computer Inquiry* a set of definitions was posited to assist in making such determinations.[5] We define data

[1] *Notice of Inquiry and Proposed Rulemaking*, released August 9, 1976, 61 FCC 2d 103; *Supplemental Notice and Enlargement of Proposed Rulemaking*, released March 8, 1977, 64 FCC 2d 771. Reference to both of these documents, is hereinafter denoted as *"Notices"*.

[2] *Regulatory & Policy Problems Presented by the Interdependence of Computer & Communications Services & Facilities*, 28 FCC 2d 291 (1970) *(Tentative Decision)*; 28 FCC 2d 267 (1971) *(Final Decision)*, *aff'd in part sub. nom. GTE Service Corp. v. FCC*, 474 F. 2d 724 (2d Cir. 1973), *decision on remand*, 40 FCC 2d 293 (1973).

[3] *Tentative Decision*, 28 FCC 2d 267.

[4] Section 64.702(c) and (d) requie that a carrier establish a separate data processing entity having separate books of accounts, separate officers, separate operating pesonnel, and separate equipment and facilities devoted exclusively to rendition of data processing services; and the carrier is prohibited from promoting the data processing services offered by the separate subsidiary.

[5] The definitions are embodied in § 64.702 of the Commission's Rules, 47 CFR 64.702:

§ 64.702 *Furnishing of Data Processing Services*

(a) For the purpose of this subpart—

(1) "Data processing" is the use of a computer for the processing of information as distinguished from circuit or message-switching. "Processing" involves the use of the computer for operations which include, *inter alia*, the functions of storing retrieving, sorting, merging and calculating data, according to programmed instructions.

(2) "Message-switching" is the computer-controlled transmission of messages, between two

Footnotes continued on next page

processing and distinguished between data processing and permissible carrier utilization of computers by establishing a dichotomy between data processing, on the one hand, and message and circuit switching on the other.

6. When these definitions were adopted, it was recognized that there might be instances where an entity might find it desirable to offer a service which represents a combination of communications and data processing. Not wishing to foreclose such opportunities, we embodied the regulatory ground rules for such operations in § 64.702 by defining hybrid services and establishing the conditions under which the offering of such services would be subject to regulation.[6] Where message-switching is offered as an incidental feature of an integrated service offering that is primarily data processing, we stated there would be total regulatory forbearance with respect to the entire service. Where the package offering is oriented to satisfy the communications or message-switching requirements of the subscriber, and the data processing feature or function is incidental to the message-switching function, we concluded that the entire integrated service would be teated as a communications service.

7. The criterion offered here is that of "incidental." Thus, if a service has been found to be hybrid, and the communications portion is "incidental to the data processing function or purpose," the service constitutes hybrid data processing. If the data processing portion is incidental, there is a hybrid communications service. We also stated that in making such determinations we would look to: (a) Whether the service, by virtue of its message-switching capability has the attributes of the point-to-point services offered by conventional communication common carriers and is basically a substitute therefor; and (b) the extent to which the message-switching feature of the service facilitates or is related to the data processing component. Thus it was determined that we would look to the facts surrounding a package offering with a view toward determining the primary thrust of the service offered.

8. The *First Computer Inquiry* was a vehicle for identification and better understanding of problems spawned by the confluence of computer and communications technologies taking place at that time. While the scope of the Inquiry was very broad and determinations were made based on the state of the art as it then existed, it was recognized that because of technological advancements which could not be predicted it would not be a final resolution of the problems presented therein. Since the release of our *Final Decision* in the *First Computer Inquiry* technological advances in hardware and software have been made and are tending to cause a blurring of the distinctions between data processing and communications which were then established. In particular, the dramatic advances made in large-scale integrated circuit technology have permitted fabrication of mini-computers, micro-computers, and other special purpose devices, which are capable of duplicating many of the data-manipulative capabilities which were previously available only at centralized locations housing large scale general purpose computers. With this new technology, users are finding it cost-beneficial to remove some of the computing power from the centralized computer location and to distribute it to terminals, or incorporate some of it into the network itself. A new phenomenon has emerged—the distributed computer network, wherein computers and terminals are performing both data processing and communications control applications, both within the network and at the customer's premises. These networks are being constructed by common carriers and also by private entities using carrier furnished dedicated channels.

B. Second Computer Inquiry

10. technological and market developments since our decision in the *First Computer Inquiry* are such that § 64.702 appears to be an inadequate regulatory device for coping with certain current service offerings. This potential inadequacy is evident when viewed in the context of its original adoption. The immediate issue before the Commission at that time concerned the various applications which might be made of central computers, and the proper role and regulation of common carriers with respect to these different uses. The *First Computer Inquiry* did not address the question of data processing elements being removed from the central computer and distributed througout the total information processing and tramsmission system. The regulatory guidelines which were incorporated into § 64.702 were addressed primarily to situations wherein a carrier would be using a host computer, in conjunction with a remote, "unintelligent" communications terminal, to provide a data processing service.[7] Now, however, processing can be placed anywhere—within the network or outside the network interface—giving greater flexibility in the designing of equipment and in the structuring of various service offerings.

11. The versatility of the user terminals which are available today further complicates our efforts to establish regulatory boundaries.[8] Microprocessor technology has clearly made it possible for terminals to automatically perform many processing operations which they previously performed poorly or not at all—by employing techniques previously limited to central computers. Many of the input/output processing functions necessary to establish: (a) Network control and (b) interaction of a computer with specific terminals are now done by distributed terminals. Microprocessor technology also permits terminals to perform many sophisticated arithmetic and word processing functions at the remote location while reducing the processing load at the central location. Thus technology may have rendered meaningless any real distinction between "terminals" and computers. With the trend toward distributed processing, functions are being taken over by "smart" terminals which are: (a)

Footnotes continued from last page

or more points, via communications facilities wherein the content of the message remains unaltered.

(3) "Local Data Processing Service" is an offering of data processing wherein communications facilities are not involved in serving the customer.

(4) "Remote Access Data Processing Service" is an offering of data processing wherein communications facilities, linking a central computer to remote customer terminals, provide a vehicle for the transmission of data between such computer and customer terminals.

(5) "Hybrid Service" is an offering of service which combines Remote Access data processing and message switching to form a single integrated service.

(i) Hybrid Data Processing Service is a hybrid service offering wherein the message switching capability is incidental to the data processing function or purpose.

(ii) Hybrid Communication Service is a hybrid service offering wherein the data processing capability is incidental to the message-switching function or purpose.

[6] For a service to be hybrid, § 64.702(a)(5) invokes the condition that remote access data processing and message-switching be combined "to form a single integrated service." A hybrid service can be classified as either hybrid data processing or hybrid communications.

[7] *See, American Telephone and Telegraph Co. (AT&T) Revisions to Tariffs FCC No. 269 and 267 Relating to Dataspeed 40/40*, 62 FCC 2d 21 (1977), *aff'd sub. nom. International Business Machines Corporation et al. v. FCC*, 570 F. 2d 452 (2d Cir. 1978).

[8] These include, *inter alia:* PRXs and telephone service ancillaries, transaction terminal, word processing computers. Versatility, and regulatory complications, result in part from the use of newer technologies, such as microprocessors, in conjunction with devices which traditionally were considered to be merely communications terminals.

offered to users by the regulated carrier sector and by the unregulated terminal equipment manufacturing sector and, (b) under the control of the user—not the carrier.

12. In the *Notices* released in this proceeding we proposed to amend § 64.702 in light of the technolgical and market developments that have taken place since the *First Computer Inquiry*. In the proposed revisions to § 64.702 we sought to define data processing positively, in terms of what it is, rather than by exception as had previously been done. The following definition was proposed in the *Supplemental Notice:*

"Data processing" is the electronically automated processing of information wherein: (a) the information content, or meaning, of the input information is in any way transformed, or (b) where the output information constitutes a programmed [9] response to input information.[10]

This definition was formulated with two related regulatory objectives in mind: (1) An objective identification of those uses of computers by carriers which require a separate subsidiary, and (2) the stimulation of economic activity in the regulated communications sector by removing ambiguities in the existing definitions. It was stated that by defining data processing positively a carrier would be able to use computers for any purpose which is not data processing. All processing activities, whether performed at a central location, at the customer's premises, or at intermediate locations within or interconnected with a telecommunications network would be encompassed within the proposed definition.

13. Given this definition certain processing activities would be considered data processing and could not be offered by a carrier except under the maximum separation conditions of § 64.702. Processing activities which would constitute data processing under this definition were stated to include, among others:

Arithmetic processing—applications include: general commercial accounting, inventory control, banking and point-of-sale processing, financial and econometric modeling, scientific calculations, etc.

Word processing—applications include: interactive information retrieval systems, management information systems, text editing, translation, typesetting, etc.

Process control—applications include the use of electronic equipment to monitor and control some process which is occurring on a continuous basis—such as nuclear-powered generating stations, an electric power distribution grid, an automatic machine tool, or a fire detection and control system.

14. We also stated that certain processing activities may be involved in the provision of both communications and data processing services without necessarily changing the nature of the communications or data processing service being offered. Among the processing activities stated to be included in this category were, among others:

Network control and routing—applications include: message and circuit switching,[11] speed and code conversion, pulse format conversion, analog to digital and digital to analog conversion, signal processing,[12] and time division multiplexing.

Input/output processing—this category comprises the uses of processing capability resident in a carrier network facility for the purpose of making disparate information sources and receptors compatible with the transmission system and with each other. Such processing activities include those necessary for formatting, editing, and buffering of information to make it compatible with the electrical characteristics of different transmission media.

15. By defining data processing in this manner the "hybrid service" categories contained in the existing § 64.702 were deleted, and the offering of communications and data processing, in effect, were established as mutually exclusive activities for regulatory purposes. As § 64.702 is currently structure, the processing *functions* of storing, retrieving, merging, and calculating establish the criteria for determining whether a particular offering constitutes data processing. Recognizing that these processing functions can be employed in the provision of either data processing or communications services, the new definition was structured in a manner so as to focus on processing *activities.*[13] *Under the new definition the determination as to whether a communications or data processing service is being offered would depend on the nature of the processing activity involved.*

16. It was noted in the Supplemental Notice that the confluence of data processing and communications maybe such that it is no longer practical or possible to make such classifications with respect to carrier equipment offerings. The potential exists for changing the nature of the processing performed in such devices through utilization of interchangeable software programs. Comments were sought as to whether the offering of customer-premises equipment which performs any information processing activity, other than basic media conversion, should be considered a communications common carrier activity and the proper institutional arrangements, terms, conditions, and regulations under which communications common carriers should be permitted to make such offerings. Comments were also sought on the possible relevance of the 1956 consent decree [14] and its applicability to the offering of customer-premises equipment by AT&T.

17. Finally, comments were sought on the need for, or desirability of, more definitive legislation in this area. In particular, comments were sought regarding: (a) Possible inadequacies of the Communications Act in addressing the convergence of data processing and communications, and (b) specific legislative recommendations or proposals directed at resolving any such inadequacies. [15]

[9] We stated that the term "programmed," meant the means of preordaining a response to given input or stimulus regardless of whether that means is achieved through the use of software, hardware, firmware or fundamental equipment design. Moreover it was noted that the second condition (b) was intended to bring services such as process control and proprietary information retrieval within the ambit of the definition of data processing.

[10] In the *Notice* it had been proposed that data processing be defined as: "the use of computer for the purpose of processing information wherein: (a) the semantic content, or meaning, of input data is in any way transformed, or (b) where the output data constitute a programmed response to input data."

[11] It was stated that such categories are meant to include packet switching (and its variations) and time-division circuit switching, and those processing activities utilized in the provision of ancillary network services such as automatic call-forwarding, abbreviated dialing, and special announcements.

[12] Signal processing comprises the use of processing operations in applications which maintain the information content of an electrical signal. These include signal detection and regeneration and the adaptive equalization of transmission channels.

[13] A function is a separable specific operation, such as storing, merging, etc., whereas an activity is the aggregate end result of a combination of operations, regardless of where they may be performed.

[14] *United States* v. *Western Electic Company, Inc. and AT&T*, 13 RR 2143, 1956 Trade Case 71, 134; Consent Judgment filed January 24, 1956 (D.C.N.J.)

[15] The *Supplemental Notice* specifically requested that the following items of inquiry be addressed:

(a) Whether the proposed definition of "data processing" correctly divides "communications" and "data processing" when applied to a carrier's processing activities, regardless of location within a service offering; and whether the proposed § 64.702 will be administratively enforceable and in the public interest;

(b) Whether the proposed amendments of § 64.702 will afford flexibility in the structuring of service offerings, and, at the same time, be conducive to

Footnotes continued on next page

II. Comments

18. Approximately 3,000 pages of comments and studies were filed in response to the Commission's proposed revisions to § 64.702 and the other items of inquiry. Comments were received from members of the communications industry, data processing organizations, equipment manufacturers, commercial users, governmental entities, and other members of the public.[16]

A. User Needs and Regulation

19. AT&T states that if present and anticipated communication needs are to be met, provision of new and enhanced communication services will be required. It illustrates various emerging needs of users which call for a communications solution by citing examples of: Transaction-oriented requirements and information interexchange problems of businesses; energy control, security and fire detection problems of building occupants and homeowners; and communication of information within and between modern business offices.[17] In addition, AT&T notes certain trends which will emerge over the next few years in the communications field: users will increasingly employ communications in the solution of their business and personal problems; there will be further distribution of processing capability from the host computer; the number of dedicated networks for single applications into shared networks will force existing user application categories (such as "transaction, message and batch") to disappear; system components that currently perform one function will perform multiple functions; single mode systems will be enhanced to provide integrated voice, data, text and image communication. Particular attention is paid to the needs of the small user for data communication services and the role of the communications common carrier in meeting these needs through common-user services available on a widespread basis. AT&T contends that carriers are a vital option in the provision of data communication services in the information handling sector, particularly in terms of the substantial user benefits that can be derived from a highly flexible, switched, common-user data network service, capable of being customized to the specific communication needs of the customer.[18]

20. Inasmuch as communication is an integral part of the information handling sector, AT&T states that the Bell System and other carriers should be permitted flexibility in designing and providing communication services. It submits that it is inevitable that there will be cases where a common carrier communications service will be enhanced or supported, either economically or in terms of quality of the service provided, by the furnishing of processing, including data processing, to the customer in a manner that is consistent with both the language and the intent of the Communications Act.[19] Contrary to the position of AT&T, however, other parties such as the American Bankers Association (ABA) believe that one total end-to-end system is not in the public interest and that the "small user" with limited bargaining power has the most to gain from free competition and multiple sources of supply in telecommunications services. Other parties, such as CBEMA, contend that carrier provision of new data services should be done under conditions in which the combination of equipment specifications, protocol, and related operational requirements, and incorporation of data functions with the transmission network do not add up to unfair competition or an improper invasion of the non-regulated data processing field by the carrier.[20]

21. While the *Notices* focused on the distinction between data processing and communications, numerous comments suggested that the Commission should focus on defining monopoly and competitive services and what regulatory scheme, if any, should be applied to the competitive sector. Various parties argue that the problem is not one of data processing versus communications but, rather, a question of natural monopoly versus competition. In imposing regulation, it is argued, regulation should be limited only to those areas where natural monopoly exists.[21] ROCHESTER TELEPHONE states that the Commission should endeavor to limit price and entry regulation to natural monopoly services, forebear from regulating teleprocessing and deregulate current competitive services in the data comminications field, and erect no federal regulatory barriers to entry by common carriers. It contends that consideration should be given to the fundamental policy which mandates price regulation of data communications products or services on the basis that the extension of regulatory power to competitive data communications business creates the anomally of trying to apply its derived monopoly regulation methods to a business whose characteristics are not compatible with such techniques.[22] It submits that teleprocessing is a new business, competitive in nature, which

---

Footnotes continued from last page

innovation in the communications and data processing fields;

(c) Whether the offering of customer-premises equipment which performs any information processing activity, other than basic media conversion, should be considered a communications common carrier activity; and the proper institutional arrangement, terms, conditions, and regulations under which communications common carriers should be permitted to make such offerings;

(d) Specific legislative proposals or recommendations directed at remedying any inadequacies of the Communications Act of 1934, as amended, in dealing with the confluence of data processing and communications.

[16] Appendix A contains a list of the parties filing comments and reply comments in this proceeding along with the abbreviations used throughout this document in referring to the respective parties. COMSAT filed a motion to accept its late filed comments which motion is hereby granted. In addition, the Computer and Business Equipment Manufacturers Association (CBEMA) filed a motion requesting the Commission to release a Recommended Decision by the Chief, Common Carrier Bureau and to formulate additional procedures [including the filing of additional comments and oral argument] to be followed in arriving at a final decision on the issues posed in this proceeding. The Association of Data Processing Service Organizations (ADAPSO), Ad Hoc Telecommunications Users Committee (AHTUC), CONTROL DATA and MCI filed comments in support of CBEMA's motion. AT&T filed a response to CBEMA's motion and, while opposing such additional proceedings, submits that the Commission should issue a Tentative Decision.

[17] These needs, it contends, may involve processing of a nature which would fall within the proposed categories of data processing.

[18] AT&T states that it is planning to provide a common-user switched digital service. It also notes that it is estimated that users have installed approximately 2500 specially designed private line oriented networks which are generally incompatible with each other.

[19] The comments of RCA Global Communications (RCAG) and American Cable & Radio Corporation (AC&R) also support inclusion of data processing.

[20] The Apendix to AT&T's Comments is a study of "User Needs and Potential Common Carrier Roles" conducted by an independent consulting firm for AT&T. CBEMA argues that the study is used by AT&T to project a large role for regulated services in providing distributed processing services and in meeting the needs of the small users. It notes, however, that identification of areas of user needs does not lead automatically to the conclusion that regulated common carriers should be or are the only parties that can fill whatever needs are identified.

[21] See comments of ABA, International Business machines Corporation (IBM), CBEMA, MCI and ROCHESTER TELEPHONE.

[22] The Appendix to IBM's Reply Comments is an analysis of the impact of common carrier regulation on competitive activities. The study concludes that common carrier regulation should be applied only to natural monopolies and, since data processing and combined communications and data processing services are not natural monopolies, common carrier regulation of these services would impede the rate of innovation and impose wholly unnecessary burdens upon the business firms affected and upon the general public. The Southern California Media Reform Workshop (SCMRW) contends, however that all facts point to the inescapable conclusion that the information industries are non-competitive, that innovation in the information industries is slowing except in the most trivial ways, and that the "benefits" which trickle down to the ultimate consumer are few.

should not be regulated, even if legislation is needed to deregulate "hybrid communication" services.

22. IBM suggests that a pro-competitive approach should be adopted under which at most, "pure transmission"—transportation of information from place to place—would be regulated. "Compound data services" which use computer systems to provide everything that a customer needs in a distributed data processing system between input-output devices and processing and storage installations represent more than pure transmission. Rather than drawing a line between data processing and comminications as two mutually exclusive areas, it submits, the Commission should (a) establish a clear definition of communications common carriage such that non-pure transmission services and customer-premises equipment used in non-pure tramsmission services could not be offered as part of a comminications service, and (b) ensure proper accounting allocations to prevent commingling of costs associated with unregulated carrier ventures with the cost of regulated services. CBEMA argues that a policy of deregulation should apply to all communications services except "transparent" exchange and private line services.[23] CBEMA contends that transmission facilities should be flexible enough to accommodate either centralized or decentralized networks. Where protocol translation is fixed by the transmission service, it argues that a loss results which can be disruptive to proper functioning of the data processing system as well as to efficient design.[24] Other comments suggest that regulation should be limited to "basic," "first-tier" or "underlying services."[25] CONTROL DATA claims that the existing computer rules have resulted in failure to realize the full capability and potential of a total information-handling system. Imposition of artificial standardization on the use of basic communications services in future information-handling systems would dampen technological innovation. Since the basic communications service is regulated, it submits, no need exists to add user regulation to existing basic communications service supplier regulation, and use of private line facilities should not be regulated.

23. Parties to the proceeding are in agreement that new regulatins must be flexible enough to cope with rapid change. It is argued, however, that two of the most positive aspects of the data processing industry have been rapid increase in innovation and relative ease with which new firms can enter the market—which can be hampered by heavy-handed market regulation and uncertainty as to what form regulation will take in the future. TELENET contends that the public interest should be clearly identified and attention paid to avoiding unnecessary regulations, minimizing cross-subsidization between communications and data processing services, and ensuring reasonable and standardized access to computer-based services.[26] Seattle-First National Bank (S-FNB) believes that there is a need for less, not more, tariffed services and that competition rather than regulation should be the guide. Regulation should be imposed only if a party arguing for regulation satisfies the burden of proof that regulation is absolutely necessary, and then regulation should be imposed only to the limited extent necessary. It suggests that common carriers should be encouraged to participate, but that teleprocessing services should be detariffed and unregulated to the maximum extent possible. Moreover, the means by which regulatory decisions are to be made as to those processing services which may be offered by common carriers on a regulated basis should be as clear as possible so that protracted case-by-case proceedings are not necessary. To the extent that regulatory proceedings are necessary, procedures should be developed to expedite rather than delay the proceedings. Even where there is a need for limited regulation, it submits, all encompassing common carrier tariff regulation may not be justified.

B. Maximum Separation

24. In the *Notice* it was indicated that the maximum separation policy would be maintained. Many parties took the opportunity to address some of the implications and applications of this policy and the comments ran the gamut—from abandonment to stricter enforcement and expanded application—depending on a given party's regulatory interest. MCI and Southern Pacific Communications Corporation (SPCC) submit that carriers which do not have revenues derived from monoploy services should be exempted from the maximum separation requirements, since the problems of cross-subsidization are largely limited to carriers having a monopoly franchise for the communications service.[27] SPCC notes that in the *First Computer Inquiry* it was stated that the maximum separation policy would be reconsidered in light of "experience." It argues that neither of the *NOTICES* address whether retention of the maximum separation policy is still the only or best method to avoid stated abuses, or whether there is any evidence of abuse within the group of carriers exempted. It submits that with no monopoly base specialized carriers could not support a period of below-cost pricing and therefore questions what the Commission's concerns might be with respect to specialized carriers. COMSAT GENERAL takes the view that where a carrier does not control the only transmission network available, the potential for anti-competitive abuse is greatly reduced. Consequently, it argues, there appears to be no justification for a requirement that non-monopoly carriers establish separate affiliates in order to offer data processing services and customer-premises equipment. AT&T contends that extension of the maximum separation policy to various categories of communications services can result in inefficient and uneconomical arrangements which may disserve the user public. Users would be forced to look to several entities to meet their comunication needs and some carriers might have to create multiple subsidiaries. It submits that the alleged potential for cross-subsidy or other unfair practices is not relevant to the threshold question of what is "communication" under the Act, and that maximum separation is unnecessary becasue of the existence of other regulatory tools. Moreover, it notes that the issue of maximum

[23] The term "transparent" is used by CBEMA to denote an analog or digital channel that is "transparent" to the user's signals in the sense that term is used in *Satellite Business Systems*, 62 FCC 2d 997 (1977), at paragraph 146.

[24] CBEMA contends that transparent facilities serve as building blocks for enhanced services and are necessary for security measures demanded by many customers.

[25] Comments of XEROX, Computer and Comnmunications Industry Association (CCIA), and CONTROL DATA. Professor Doinald A. Dunn suggests policy alternatives which he contends would permit the Commission to allow presently unregulated firms that do not provide transmission facilities to provide "communications" services without regulation and free of the threat of regulation.

[26] TELENET maintains that, while the Commission lacks discretion to totally forebear from regulating a common carrier service, ample authority exists which permits the Commission to vary the degree of regulaton of particular classes of carriers to reflect the competitive environment in which they operate. It submits that carriers operating exclusively in a competitive marketplace and not having dominant market power should be relieved of continuing regulatory surveillance from tedious circuit-by-circuit certification requirements and the requirements of § 61.38 of the Rules relating to cost and revenue data in support of tariff filings.

[27] Western Union Telegraph Company (WUT) favors the abolishment of the maximum separation policy arguing that if there is to be such a policy it should apply only to major telephone carriers.

separation was raised by the Commission only with respect to issue (c) of the *Supplemental Notice*. GTE Service Corporation (GTE) maintains that the maximum separation requirements preclude telephone companies from directly or indirectly offering many services which are not economically feasible under such constraints.

25. IBM maintains that the maximum separation rules should be modified if they hamper inovation and flexibility in carrier offerings. It stops short of suggesting, however, that carriers be required to place their unregulated ventures in separate subsidiaries; as an alternative it suggests that a system of accounting and allocation for costs and revenues be adopted that would prevent commingling. United Systems Service, Inc. (USS) maintains that where data processing and communications are intermingled for reasons of efficiency, or because a service could not be provided if separate entities had to provide the components, the maximum separation policy is inconsistent with the realities of the marketplace, and CONTROL DATA suggests that the maximum separation policy forces a customer of both data processing services and communication services to obtain and use duplicate communications facilities.

26. CBEMA, CCIA, and ADAPSO argue that no change should be made in the basic decision that carriers entering the data processing business must do so by the maximum separation route. Moreover, CBEMA submits that carrier expansion into non-transimission services such as burglar and fire alarm systems, automatic reminder/wake-up, and process control services (as in energy home consumption, etc.) should be accomplished by separate subsidiaries. Others, such as Incoterm Corporation (INCOTERM) and Bunker Ramo Corporation (BUNKER RAMO), believe the maximum separation policy should be strengthened through such means as stringent accounting systems and requiring carriers to file detailed reports on relationships with separate entities and the carriers' own pricing and servicing policies. Boeing Computer Services, Inc. (BOEING) argues that market place experience demonstrates that the maximum separation policy is an insufficient, uncertain safeguard against anti-competitive practices; it can detect only the most obvious abuses.

C. Definitional Approach

27. A definitional scheme is the vehicle utilized in the *Notices* to address the regulatory problems raised by the confluence of data processing and communications. AT&T argues that the confluence of communications and data processing does not make it impractical or impossible to make regulatory distinctions between communication services and data processing services, as long as it is recognized that the distinction is to be made at the *service* level as opposed to the function or activity level. The argument is made by GTE, however, that no single boundary can be drawn for the purpose of creating limitations on involvement by common carriers in data processing and for establishing circumstances under which unregulated firms would become subject to the Act.[28] The Independent Data Communications Manufacturers Association, Inc. (IDCMA) argues that the definitional approach when applied to customer-premises equipment attempts to solve an economic problem with a technological remedy, and that any regulatory device which ignores the economic dynamics of the marketplace and concentrates on ephemeral technical distinctions must fail. Others, such as IBM and ROCHESTER TELEPHONE suggest that the Commission should abandon the definitional scheme on the basis that it is not possible to classify processing activities as either communications or data processing based on the nature of the processing performed.

28. ROCHESTER TELEPHONE maintains that a definitional solution tends to be exclusive, and entry into a particular market is discouraged once a "communications" label has been attached, and therefore relegates the free marketplace to secondary role. It asserts that the definitional solution is inadequate because it encourages *ad hoc* determinations based on definitions that quickly become obsolete. SCMRW, a public interest organization, contends that attempts at separating communications and computer processing are impossible in that "they ignore the symbiosis of information technologies which is the basis of computer communication." Others argue that it is unrealistic to attempt to delineate between data processing and communications—the facts of life in the marketplace will make any definition artificial and unworkable, especially with respect to the terminal equipment sector—and that ways should be explored to regulate the merged and integrated packages, instead of seeking ways to separate them. National Bureau of Standards (NBS) submits that establishing an arbitrary dividing line between data processing and communications does not have a sound technical basis and may work a hardship on potential offerors of innovative services and limit government options in selecting the best products and services that meet its requirements.

Specific Criticisms

29. It is argued that the proposed definition does not clearly define the regulatory boundary and it would limit innovation and flexibility in structuring new service offerings and impose an artifiical limitation on the development of new equipment. Various parties suggest that other terms be defined either in place of or in addition to the definition of data processing.[29] It is argued, for example, that, if a definitional approach is relied upon defining "common carrier communications" or "data processing service" is a preferable approach to delineate between communications and data processing, and that transmission of an unaltered message through a network should be the essential element in any definition of "communications." S-FNB believes that an alternative would be to have regulatory decision making without reliance on categorization of a service as "communications" or "data processing" by dividing the teleprocessing network into its componet parts (e.g. lines, switching facilities, teminals, central computers) and determine the nature of the regulation to be imposed on each sector.

30. A great diversity of views exists as to the actual impact that the proposed revisions to § 64.702 might have on both the regulated and unregulated sectors. Several parties note that the language in the *Notice* makes for uncertainty as to the scope of regulation and that the boundaries between what is, and is not,

[28] GTE suggests that there should be a definition for purposes of § 64.702 which would be applicable to the regulation of communications common carriers, and that there be separate guidelines for the unregulated sector. Under this approach it contends that it is essential to define both "data processing service" and "communications." Thus, it submits, the Commission should either allow for a new "round" of comments in this proceeding, focused particularly on the unregulated boundary question, or proceed to adopt an appropriate § 64.702 in this proceeding and provide for consideration of the unregulated boundary question in a new proceeding.

[29] CCIA, for example, states that an attempt should be made to define "communications common carrier services" directly, and not indirectly with inexpert definitions of data processing. See also comments of ABA, McDonnell Douglas Automation Company (MCAUTO), Scientific Time Sharing Corporation (STST), United States Independent Telephone Association (USITA), and GTE. Numerous comments recommend specific language for various definitional approaches, in addition to suggesting revisions to the definitional structure that has been proposed.

considered communications common carriage subject to regulation may inadvertently be changed.[30] IBM argues the regulation of all carrier services except those classified as data processing is unsound and would expand the scope of regulation. S-FNB maintains that the language in the *Notice* could be construed to expand the regulatory unbrella through regulation of currently unregulated activities; for example, a manufacturer of computer hardware could become a common carrier when offering terminals which are connected to a telecommunications line, or a bank could turn itself into a common carrier in providing "total package" processing sevices to its correspondent banks, or that common carriage may be involved should a bank, in setting up a point-of-sale system (POS), decide to lease a switch from a computer manufacturer rather than utilizing a telephone company-provided switch.

31. On the other hand, it is argued that the proposed definition is too broad in that many communications services would be included within the ambit of the unregulated sector. GTE argues that it would permit a party offering a communications service, on what amounts to a common carrier basis, to escape Title II regulation merely because a single element of "data processing" is included in the integrated offering. GTE is not alone in its interpretation. Since data processing and communications would be considered "mutually exclusive", BOEING argues, only part of a recognized data processing activity would be sufficient to assure that a service would not be regulated—regardless of the amount of communications processing involved. Thus when computer assisted terminals or other network processing devices are utilized by a carrier to provide a service—any part of which involves "data processing"—the service in its entirety would be offered on an unregulated basis, whether offered by a carrier or an unregulated entity even if communications processing is utilized in the offering. It submits that a less precise criterion would not be as useful as the existing "hybrid" concept. Department of Justice (DOJ) maintains that the proposed versions would expand the scope of unregulated data processing, particularly with respect to the equipment sector.

32. CBEMA cautions that if the Commission decides to define the unregulated data processing field, any proposed definition must recognize the broad reach of the unregulated data processing services field, including those data processing services in which the content of the data or information may remain unchanged.[31] It contends that it is error to define a common carrier communications offering as any offering in which the content of the data is not changed or to assume that a data processing service must include a change in the meaning or content of all input information. It argues therefore, that parts (a) and (b) of the proposed definition should comprise two independent and sufficient tests. In a similar vein, CHEMICAL BANK maintains that the definition of data processing services must be broader than a transformation of content or meaning of input information in order to cover the necessary range of services in the banking industry. Use of the information transformation test alone will result in confusion and disruption since it is possible for a data processing service to retrieve some information unchanged in substance and other information "transformed." Since the judgment of whether input information is changed in content or meaning is of little help in determining the use made of data entered, it suggests that this criterion must be enlarged by the addition of criterion (b) and a primary purpose test or value to subscriber test to produce a formulation descriptive of data processing services.[32]

33. Various regulated entities, however, expresss concern over any determination that would result in part (b) of the proposed definition constituting a sufficient test for characterizing data processing. AT&T and GTE argue that the "programmed response" criterion of part (b) generically described all computer architectures since every output can be said to be a "programmed response" to input. It is argued that the proposed revisions ignore the use to which any processing is put and appear to prohibit the use of computer-like structures in any regulated telecommunications activity.[33] AT&T states that it therefore becomes difficult to draw a meaningful distinction between the definition of "data processing" and the definition of "processing." It also notes that the language in the definition of "data processing" in the *Supplement Notice* was changed from that contained in the *Notice*.[34] The language in the The *Supplemental Notice* substitutes "information" for "semantic" in one place and "data" in three places. It submits that if a different meaning was intended it should be explained by the Commission. It notes, moreover, that no distinction is made between the definition of "data processing" in § 64.702(a) and the term "data processing service" in § 64.702(b). It argues that the definition of data processing becomes, in essence, the definition of "data processing service," and, in the absence of a separate definition of data processing service, the proposed revisions can be read as severely limiting a carrier's use of computer technology.

34. AT&T notes that clause (a) of the proposed definition talks in terms of the transformation of the content of any "input information," whereas the existing § 64.702 talks in terms of the alteration of the content of the "message." It argues that this proposed

[30] In paragraph 22 of the *Notice* we stated: "A service offering would be considered data processing if it meets the data processing criterion set forth in our definition. Where such criterion is met, a carrier would be required to offer the service subject to our maximum separation policy as enunciated in § 64.702 of our Rules. To the extent that a service does not meet the criterion for data processing under our new definition it would be considered a communications service offering and subject to regulation under Title II."

[31] The proposed revisions to § 64.702 define data processing as "* * * the electronically automated processing of information wherein: (a) the information content, or meaning, of the input information is in any way transformed, or (b) where the output information constitutes a programmed response to input information. CBEMA notes that in pure information retrieval services the needed information is retrieved from the data base with exactly the content which was entered.

[32] According to CHEMICAL BANK, under the use or value test if the purpose and value of the service is to transport a message and deliver it as intended, then the service can be considered a communications service. If the purpose is to organize information for later processing, update it according to a program, have it available in coded form for recall, or to use the information for derivative data, reports and products, then the service is not communications but data processing. It contends that an appropriate definition of "data processing service" would recognize that the input information is coded, stored and used in some way which is a benefit to the subscriber.

[33] It is argued that part (b) would prevent communications common carriers from offering a host of services, except pursuant to the maximum separation requirements. Such services, it is argued, would include: automatic reminder/wake up; least cost routing with exclusion; outward call queing with automatic call back; automatic call distribution; 911 emergency service; automatic total and peak hour remote meter reading of various utilities over telephone lines by use of an external processor; speed calling and call waiting; computer-based store and forward message service; call pre-emption; traffic control, system management, survey, recording and printing; switched directline service; burglar and fire alarm service; specialized billing service; time and charge service for motel/hotels; security alarm systems; etc. GTE notes that paragraph 10 of the *Supplemental Notice* shows that this interpretation is not the meaning intended. It contends, however, that the proposed definition should be amended to remove this interpretation on the basis that any definition should stand on its own and not be ambiguous on its face.

[34] Compare the definition contained in fn. 10 with the definition contained in paragraph 12, *supra*.

shift appears to alter a hallmark test of communications, namely, that the message of the subscriber is not changed by the carrier. It submits that the Commission should either substitute the words "the message" for "input information" or provide an explanation of any intended difference, with opportunity to comment. USITA argues that the "unaltered message" concept should not be obfuscated by viewing in isolation the steps required to prepare a message for transmission, or the way the transmission facility performs it function. This accords with COMSAT's contention that only processing activities which result in a change in the semantic content or meaning during the transmission process should be included in the category of data processing.

Function vs. Activity

35. The *Notices* attempted to avoid distinguishing between communications and data processing on the basis of certain processing functions such as storing, merging, calculating, etc. Recognizing that these functions may be common to both communications and data processing services reference is made to "processing activities"—where an "activity" is the "aggregate end result of a combination of operations or functions." [35] AT&T contends that the term "activity" will only lead to confusion and difficult enforcement. Since "activity" has no relationship to the terms in the Act, it argues that no statutory basis exists for asserting jurisdiction on the basis of the "activities" performed. Moreover, it notes further uncertainty with the term because the *Notices* do not indicate whether "activity" is viewed as synonymous with service or whether a service could consist of one or more "activities." [36] The controlling determinant, it contends, should be whether the entity is engaging in a *service* which is communications common carriage.

36. COMSAT GENERAL believes that while the proposed revisions properly shift the focus from processing functions to processing activities, it is questionable whether any definitional distinction can be drafted which sets forth clear guidelines. CCIA contends that the abandonment of the functional approach in favor of the activity performed approach segregated into a few categories is an oversimplification, especially with respect to terminal equipment where the classification of the device depends upon user intent and how the user implements it. IBM submits that any definition of data processing should focus on the total system in which equipment offerings operate and "activity" should be regarded as the total system and not any one element of it.

37. Another issue raised by the comments deals with the use of examples as a means of amplifying upon the application of the proposed definition. Some comments noted that the Commission in the *First Computer Inquiry* declined to make reference to specific examples as a guide in applying the definitions ultimately adopted, and it is argued that the rationale for not using examples would appear to be valid now more than ever. In addition, comments differed as to the extent to which any regulatory significance should be attached to the examples listed in the *Notices*. Some entities thought that any rule finally adopted should contain the listed examples of processing activities. Other comments, while favoring inclusion, argue that it should be made clear the activities contemplated by the proposed definition are not definitive or all-inclusive and may require reformation with the advent of new technology. There are also those comments recommending the expansion, clarification or modification of the proposed processing categories, including the creation of new categories.[37]

38. AT&T, on the other hand, is concerned that the use of specific examples may act as a prejudgment as to what cannot be provided in connection with particular future communications services. It is argued that the examples reflect a "mutually exclusive" view which does not comport with current technology and user needs and that the categories do not provide an adequate distinction between legitimate present and future uses of computer processing capabilities from which carriers might be excluded. AT&T contends that the activities listed in paragraph 9 of the *Supplemental Notice*, and denoted as constituting data processing, are overly broad and may exclude carrier provision of communication services. It argues, for example, that information retrieval is part of its Automatic Intercept System which utilizes a data base to provide correct information as to recently changed, disconnected and unassigned telephone numbers. It is also used in the provision of its Speed Calling Service and Enhanced Private Switched Communications Service (calling privileges). Moreover, "arithmetic processing" is utilized in support of its day-to-day business operations and can be utilized without necessarily providing a data processing service, i.e., for purposes of checking network status, traffic loads, demand forecasting, in providing Automatic Call Distributor Service, and in error checking, detection and correction.[38] In addition, AT&T contends that "word processing" is not part of data processing, since it is related to the production of hard copy text,[39] and notes that carriers have traditionally provided services which included text editing, translation and message retrieval. With respect to the "process control" category, it notes that carriers supply network management and carrier maintenance alarm systems, etc.—a form of process control which has been characterized as a data processing activity. "Process control" can cover a multitude of applications, such as Dataphone Select-a-Station, and Alarm Reporting Telephone, and are not

[35] GTE notes that while it is explained that the intent of the proposed definition is to "focus on processing activities rather than on processing functions," this thought is not reflected in the actual wording of the proposed rule. AT&T assumes that no definition of function will appear in the new rule.

[36] AT&T views an "activity" as a component of a service rather than as a system which can comprehend several services.

[37] E.g., CBEMA recommends the inclusion of a new data processing category denoted "user accessible processing" which would include: user preparation, compilation, assembly and interpretation of programs; file and data base management by users; remote job entry and user time sharing systems. COMSAT contends that the "Input/Output Processing" category should include processing activities necessary for: data/speech compression; data encryption; image enhancement; and computer access to the communications system wherein a carrier would supply software to operate within a communications controler and permit a computer to access specific communications networks. Securities Industry Automation Corporation (SIAC) would refer to the data processing categories as "Batch Processing", "On-Line Processing" and "Real Time Processing." MCI contends that the "Network Control and Routing" category should be expanded to include call accounting and traffic statistics as types of processing activities authorized to be provided by carriers. Various other parties, such as SBS, request that determinations be made with respect to the nature of various processing activities that may be included within their respective offerings. IBM states that, contrary to the *Supplemental Notice*, the operations of "formatting, editing, and buffering of information" do not occur to make the information compatible with the electrical characteristics of different transmission media. Analog to digital conversion is done for that purpose. In addition, GTE states that no rationale is given for why the activities listed in paragraph 10 of the *Supplemental Notice* would be excluded from the definition.

[38] With respect to error detection and correction, AT&T also states that "if the messages relate to dollar amounts of orders, claims or other business amounts, a totaling of these amounts provided to the customer would allow a double check that all messages had been delivered.

[39] WUT states that the "word processing" category may embrace functions traditionally performed by a carrier: formatting, use of stored message texts, address lists, editing, correction, stock reports, news bulletins and directory information services.

therefore limited exclusively to the data processing industry.

Hybrid

39. The strongest criticisms levied against the proposed revisions to § 64.702 center around the elimination of the hybrid service categories embodied in the present rules in favor of a "mutually exclusive" definitional approach. When confronted with the possibility of eliminating the hybrid concept, a number of parties favored retention of the existing definitional structure. Numerous parties argued that communications and data processing are not "mutually exclusive" and that the confluence of data processing and communications would seem to suggest retention, not abandonment, of the hybrid concept. It is argued that the hybrid category gives the Commission flexibility to examine borderline cases, while the substitution of an approach which requires an "activity" to be defined conclusively as either communications or data processing could inhibit service enhancement and innovation, in both the regulated and unregulated sectors. Many of the parties favoring retention of the hybrid concept perceive it as a flexible approach to regulation in that various standards such as primary purpose, end result, value of the service to the user, etc., can be used in determining the nature of a particular service. It is argued that there is a need for flexible regulation, and regardless of the definitions utilized, a strict definitional approach may well prove far too rigid.

40. TELENET maintains that the trend is toward greater rather than less hybridization and therefore the elimination of the hybrid services is unrealistic and flies in the face of technology. Moreover, it submits that if there is a problem with the implementation of the existing rules it has not been identified in either of the Notices. TELENET states that the proposed revisions to § 64.702 appear to be a drastic approach to the communications/data processing controversy, and that the current definitions are adequate and should, at most, be fine-tuned.[40] It notes that the existing computer rules have been applied directly in only two cases—WUT's offering of its *SICOM SERVICE*[41] and AT&T's offering of the Dataspeed 40/4 terminal.[42] Moreover, the only substantive changes the proposed revisions appear to make over the existing computer rules is to move from "communications" to data processing those activities where, without any change in message content, output information is transmitted as a programmed response to input information. It states, moreover, that process control and information retrieval appear to be data processing under the existing rules and therefore it questions whether there is a need to supplant the current definitions contained in § 64.702(a). TELENET states that while the concepts of "integral" and "incidental" under the existing rules may need articulation, this does not necessitate the abandonment of the primary purpose standard. It suggests that the Commission should develop more definitive regulatory guidelines for the application of the hybrid service rules, including a more workable definition of "integral," coupled with a reaffirmation of the "primary purpose" test as the means of determining which component of a hybrid service is "incidental" to the other component.[43]

41. COMSAT GENERAL contends that retention of the hybrid concept would provide common carriers with the necessary flexibility to offer services which are primarily communications in nature but which may involve an element of data processing under the proposed definition.[44] GTE argues that a boundary for carrier hybrid offerings should be developed to encompass a broad concept of communications that would not restrict carrier technology or suppress carrier initiative. AT&T argues, however, that the hybrid concept should not be retained as it is presently written. It submits that the substitution of a "primary purpose test" for "integral" and "incidental" merely substitutes one ambiguous term for another. General Services Administration (GSA) argues that the hybrid concept is not the sole solution, but it is preferable to the Commission's proposed revisions to § 64.702, and before it can be eliminated an adequate substitute must be found.

Need for Clarification

42. CBEMA, ADAPSO, MCAUTO, and BOEING, among others, maintain that it should be made explicitly clear in any proposed revision that a "data processing" service may include operations classified as "network control and routing" and "input/output processing" as well as transmission of messages or message switching should these elements be necessary to the provision and use of the data processing activity involved. These parties argue that it should be made clear that inclusion in a data processing facility, system, or service of communications elements will not impair or detract from its status as an unregulated data processing service. Moreover, it should be made clear that all services now provided on an unregulated basis, such as remote access data processing or hybrid data processing services, would continue to be available on an unregulated basis under any new definition of data processing. WUT maintains that exceptions should be written into the revisions for news and informational services. It submits that "grandfather" status should be given to existing processing activities performed in the course of existing services, including news and informational services, directory assistance, stored message texts and addressee lists, text additions and changes, and "will call" (mail-box) services.

43. Dr. Raymond Panko suggests that the current computer rules have impaired the development of computer message services because their applicability is highly uncertain, and contends that the proposed rules would have an equally adverse impact. He notes that electronic mail is beginning to be revolutionized by the application of computer processing tools. Dr. Donald Dunn states that users with an interest in word processing and related office automation will want to purchase a message service along with their other services. It is argued, therefore, that the regulatory issues raised by computer message services should specifically be addressed in this inquiry. In this regard AC&R argues that the proposed definition should be revised to make clear that store and forward computer message services, such as "mail-box" are not included in the scope of the proposed definition.

44. Suggestions have been made for a further, more sharply focused notice, with another round of comments before

[40] The comments of MCAUTO and ADAPSO also support this position.

[41] *The Western Union Telegraph Company*, 59 F.C.C. 2d 140 (1976); *reconsideration denied*, 62 F.C.C. 2d 518 (1976).

[42] Footnote 7, *supra*.

[43] In focusing on the terms "integral" and "incidental," TELENET suggests that the hybrid components would be "integral" only if "they operate upon the same data flowing within the system, or one utilizes as its output the output data from the other and neither component could be removed from the service without destroying the practical value of that component to the users of the service." The determining factor in "incidental" should be the primary purpose of the service from the user's standpoint. Under this approach TELENET states that data processing may contain communications elements if such elements could not be reasonably separated from the service and offered on a stand-alone basis.

[44] For example, COMSAT GENERAL suggests that messages could be stored at earth stations, etc., on a disc controlled by a mini-computer. Geographically separated offices could access the mini-computer and obtain the portion of the stored data of interest to the calling office.

any determinative action is taken. USITA states that the ultimate regulatory purpose for the inquiry is obscure and questions the jurisdictional basis for Commission action contending that Sections 4(i) and (j) and 403–404 of the Communications Act are procedural and confer no substantive authority. While further proceedings may be appropriate, AC&R urges the Commission to consider the formation of a task force, comprised of industry and commission personnel, to attempt to define with specificity and the problems and to seek to identify possible solutions. AC&R also contends that carriers should be permitted to share redundant computer capacity and that § 64.702(d) should be amended to permit carriers to perform data processing services for other carriers on a cost sharing, off-line, basis when such use will not interfere with the provision of common carrier services. Moreover, GTE suggests that § 64.702(d) should be modified so as to retain its original intent, i.e., that the prohibition against carriers making switching computer system capacity available to outside entities should be limited only to central computers.

D. Customer-Premises Equipment (CPE)

45. AT&T maintains that the carrier provision of CPE is part of regulated communications common carriage when offered in connection with a communications service. It argues that the notion that carriers might be excluded from providing CPE with "information processing capabilities" contravenes Section 3 of the Act and the objectives of the Inquiry. It contends that the surest way to encourage the provision of new and innovative service offerings is to provide carriers with maximum flexibility in designing their systems. It argues that the mere incorporation of processing capabilities inot CPE does not alter the status of the device as "communication."[45] Moreover, it contends that it is difficult to dicuss the Commission's proposal due to uncertainty as to what is meant by the terms "information processing" and "basic media conversion."[46] In addition, it states that concerns about cross-subsidization are not determinative of the basic definitional question and the existing stringent controls obviate any need to adopt special institutional arrangements to prevent improper pricing, etc. GTE also argues that the provision of CPE should be part of the total communications common carrier charter. It contends that § 64.702 should first consider the activity being performed while secondarily testing for the presence of micro-processors.[47] It also challenges the various suggestions that the maximum separation requirements of § 64.702(b)(and (c), which were developed with respect to central computers, should be applied to the carrier provision of CPE; the anti-competitive remedy of precluding carrier offerings should not be applied unless all other approaches have been analyzed. USITA argues that is is of no decisional significance whether a terminal is dumb or "smart" and that it is error to suggest that change and improvement transforms the basic nature of and service provided by a terminal or that a carrier should be barred from providing such terminals.[48] It contends, moreover, that any prohibition against common carrier supplied terminal equipment or a separate subsidiary requirement would be anti-competitive. COMSAT GENERAL takes the position, however, that there is no valid reason to require that all common carrier CPE offerings be regarded as communications common carrier activities subject to regulation. AC&R states that there should be waivers, on a liberal bass, from the strict letter of the regulations for carriers providing equipment which might not other wise be permitted under the proposed revisions to § 64.702.

46. MCI notes that terminal devices are taking on more functions and intelligence and that such devices are incorporating the charateristics of data processing system. It states that in the "office of the future," almost every piece of office equipment will be a "smart" terminal/processor which will be enhanced with communications capability and large storage facilities. While the capability of a terminal device to utilize interchangeable software programs could change the nature of the processing performed by that device, MCI argues that this is also true of large data processing or communications systems. It contends that if a carrier provides a terminal as part of its communications service, it should be permitted to make it as usable as possible, so long as the carrier does not provide programmed instructions to accomplish the arithematic functions of a user.[49] It contends that the place where a user accomplishes any processing function should be dictated solely by the specific requirements of his information system. In a similar vein, various user groups, such as AHTUC, contend that communications common carriers should be authorized to provide communication services without regard to the location of the equipment, and that any determination of permissible information processing activities should depend upon the nature of the service being rendered, not upon where it is performed. AHTUC believes that progress in information processing systems would be impeded if carriers were prevented from incorporating incidental programmed responses in equipment furnished for use at a customer's premises and under customer control.

47. Various parties take the position that in addressing the distinction between data processing and communications there should be a distinction between equipment offerings and service offerings.[50] MCI believes that a pure equipment offering should be treated differently from a service offering.[51] The argument is also made that the Commission should not attempt to distinguish CPE offerings on the basis that some are offerings of "communications" CPE and others are offerings of "data processing" CPE. It is argued that CPE is too rapidly changing and too complex to be pigeon-holed as either "communications" equipment or "data processing" equipment. IDCMA suggests that applying a definitional

[45] *Dataspeed 4/4 Decision*, fn 7, *supra*.

[46] Comments of IDCMA question how basic is "basic," and what if a device performing media conversion is connected with other information processing equipment.

[47] GTE maintains that the proposed revisions to Section 64.702 should be altered to exempt any device which is based on more or more microprocessors and associated read-only memories (ROM) from being classified *a priori* as a data processor. It argues that the activity performed by a device constructed in this way cannot be varied at its time of use—the program is fixed and immutable.

[48] USITA suggests that the Registration Program offers a test by which the communications nature of a service could be determined: "Presumably, the Commission does not intend to register data processing equipment; and thus, registration itself should be *prima facie* evidence that the end result of attachement of a registered device to the network would be the furnishing of a communications service." (Reply Comments p. 10)

[49] MCI recommends revising the "input/output processing" category to broaden the functions that can be performed by a carrier to include manipulation of information of information for other purposes thatn to "make it compatible with the electrical characteristics of different transmission media." But is does not permit the arithematic operations traditionally associated with data processing.

[50] ADAPSO contends that the marketing of CPE should be considered a matter apart from the rules dealing with the participation of carriers in the data processing service market.

[51] MCI states that a "pure equipment" offering is one involving only device-related programmed instructions necessary to make the device compatible with the information system with which it interfaces and to perform the basic functions for which it was designed, but not user applications; whereas a "service" offering involves equipment combined with programmed instructions to perform a user application, e.g. fund transfer, credit checking, etc.

approach to classify CPE would involve the Commission in a technical quagmire unrelated to the problem of carrier participation in the terminal equipment market. It states that while it is difficult to apply definitions to services it is almost impossible to apply them to equipment which performs a variety of functions that are incapable of logical separation.

To eliminate the need for numerous *ad hoc* determinations as to the type of functions performed by terminal equipment, IDCMA proposes that the Commission distinguish between equipment on the basis of whether it is offered in a competitive environment, i.e., "competitive" CPE would be treated one way and "monopoly" CPE would be treated in another. It suggests that devices which share common competitive characteristics should be manufactured and provided by a separate, regulated subsidiary of a communications common carrier. Such an approach, it contends, addresses the danger that a carrier will, to the detriment of its monopoly customers, market competitive equipment at rates which are subsidized by the revenues from monopoly services or equipment, or that the carrier will use its monopoly power to engage in anti-competitive practices such as tying arrangements. It submits that the separate entity should be regulated because neither maximum separation nor strict accounting measures can be relied upon to prevent cross-subsidies and that suggestions which would permit carriers to offer competitive CPE directly to the public on an unregulated basis should be rejected.

49. A number of parties contend that carriers should not be allowed to offer CPE under tariff, and that carriers wishing to offer such equipment should be required to do so through a separate subsidiary corporation. CCIA argues that the Commission should not regulate CPE but rather should confine itself to questions of carrier transmission. CCIA maintains that competition between unregulated equipment suppliers and regulated carriers has resulted in unjust cross-subsidization, threatened competition, and entangled the federal bureaucracy in the workings of the free market. It contends that all carrier-provided CPE which inputs or receives data, voice, or image traffic should be manufactured and offered on a non-tariffed basis through a separate arms-length subsidiary. If maximum separation is not possible for all carrier-provided CPE, CCIA states that an alternative is to prohibit common carriers from offering any CPE which sends or receives digital signals.

50. CBEMA and ABA contend that the offering of CPE should be by means of maximally separated unregulated entities. CBEMA contends that a totally unregulated market for terminal equipment does not foreclose carrier participation, and the steps necessary to establish a totally unregulated terminal equipment market should be set out for public comment. It submits that, at a minimum, it will be necessary to assure that carrier equipment companies are separated from the revenues, personnel and operations of the monopoly carrier, including all research and development, manufacturing, marketing, installation, and maintenance performed by or for the monopoly company. IBM contends that CPE used in non-pure transmission services should not be offered as part of a regulated communications service, but stops short of suggesting the need for maximum separation, favoring instead a rigorously enforced accounting program. BUNKER RAMO and INCOTERM take the position that there should be a blanket prohibition on regulated carrier entry into data processing services and equipment, but, at a minimum, all carrier-provided CPE should be detariffed and offered only through independent subsidiaries pursuant to the maximum separation policy.

51. Electronic Industries Association (EIA) states that carrier should be permitted to provide terminal equipment provided that the combination of carrier-provided services and terminal equipment does not result in the rendering of a data processing service, and providing that carrier-provided terminals cannot access capabilities of the network which are not similarly offered to users of non-carrier terminals. TELENET maintains that carrier offerings should be free of anti-competitive features in the form of price discrimination, cross-subsidization, protocols, or artificial technical restraints. It further states that CPE should be defined as including only equipment which performs input/output (media conversion) or data processing functions for the user, and should exclude equipment—whether located on the premises of the carrier or the user—which performs only communications functions, e.g., modems, multiplexers, and concentrators.[52] It contends that any requirement for the unregulated offering of CPE only through separate subsidiaries should be limited to monopoly carriers on the basis that only monopoly carriers have a protected pool of revenues which could be used to cross-subsidize the offering of CPE.

52. DOJ suggests that marketplace perceptions and realities are an appropriate basis for regulations in this area rather than simply physical product and service similarities. It contends that the Commission could adopt regulations under which devices or services perceived by customers as "data processing services" would be so classified, even if they included significant "communications components." Moreover, it contends that a "cluster" approach to market definitions is legitimate, under which the Commission could classify all devices and services associated with data processing as "data processing" for purposes of § 64.702, even if to do so might in particular instances classify what alone would be "communications" devices as "data processing" devices. One possible solution it perceives is the total "deregulation" of terminal and related activities on the part of non-carrier firms, with franchised carriers still subject to full economic regulations.

E. Consent Decree

53. With respect to issue (c) in the *Supplemental Notice*, we recognized the possible relevance of the 1956 consent decree [53] and specifically invited comments on the decree and its applicability to the offering of customer-premises equipment by AT&T. AT&T states that under the terms of the decree Western Electric and its subsidiaries may manufacture for sale or lease to others only that equipment which is of a type sold to AT&T and the Bell System telephone companies for use in furnishing common carrier communications services subject to regulation. While the decree limits the Bell System to the provision of common carrier communications services, AT&T notes that it contains no restrictive provisions which limit AT&T's participation in that arena. It submits that the decree is bottomed on the existing regulatory framework and the fact that "communication" as used in the Communications Act or the decree was never intended to be a static description of the technologies and services in existence at the time of their enactment. It contends that a restrictive view by the Commission as to what is communication terminal equipment could, if applied in interpreting the consent decree, severely limit the Bell System's role in the utilization of such equipment in its services and could

[52] It argues that the "Telenet Processor" which interfaces with the X.25 packet network and can be located on the customer's premises should not be considered CPE.

[53] Footnote 14, *supra*.

remove the innovative competition of Western Electric and Bell Labs in the relevant terminal market. Moreover, it maintains that modification of the decree is neither a necessary nor an appropriate solution to the issues raised in this Inquiry, and that there must be "* * * a clear showing of grievous wrong evoked by new and unforeseen conditions * * *" before a court will modify a consent decree. *Swift & Co.* v. *U.S.* 286 U.S. 106, 119 (1932).[54]

54. The existence of the 1956 consent decree is a matter of objective fact which, according to DOJ, reflects traditional policies regarding the diversification of regulated firms. DOJ states that it looks to FCC regulation in determining whether a given AT&T activity is a "regulated communications offering," and what the FCC denominates as "unregulated data processing" *prima facie* would not be considered a "regulated communications service" for purposes of enforcing the consent decree. In this regard it states that the fact that a particular service may be regulated at the state level does not in itself conclusively establish that a service satisfies the requirements of the decree that it be a "regulated communications" offering, although it is evidence to be carefully considered. DOJ states that while its views reflect enforcement intentions, they are not necessarily definitive. DOJ maintains that it is not sufficient to assert that the restrictions imposed on diversification efforts by AT&T are "unfair and should be relaxed," in light of abundant evidence that AT&T attempts to thwart all competition in its traditional zone of economic influence. Nor, it submits, does "economic efficiency" require AT&T to provide data processing services and equipment.

55. DOJ contends that, while the Commission may believe that controls on telephone company pricing policies and practices and separate subsidiary requirements will minimize the probability of abuses, the realities are such that a more air-tight case is required by the courts to justify fules and practices. It contends that substantial capital and marketing commitments have been made on the assumption that AT&T will not diversify into the data processing field. If the decree remains unmodified, it believes that there is no overwhelming competitive difference between the existing computer rules and the proposed revisions. DOJ perceives the proposed revisions to § 64.702 as expanding the scope of unregulated activity under which more firms would be exempt from regulation. It submits that modification of consent decrees is not an easy process; it must be ascertained whether intervening changes have eliminated the need for the decree, or whether "dangers once substantial have now become attenuated to a shadow." [55] It notes, however, that the decree is an order of an equity court designed to protect competition; it is not a putative order, and if in fact it inhibits competition or is unnecessarily restrictive, serious consideration should be accorded to whether the decree should be modified or withdrawn. While there have been significant changes in the regulatory barriers to competitive entry into certain sectors of the domestic communications business, DOJ states that the structure of the leading firm, AT&T, remains essentially the same—its dominance has not "become attenuated to a shadow." It maintains that the basic structure of the telphone industry remain essentially the same, plus various firms have equities in the status quo. Unless a more air-tight case for modifying the decree can be developed than has been to date, it suggests that the likelihood of the restrictions being lifted by the court is not great. It submits that a record must be developed that shows the relative competitive advantages and disadvantages of permitting AT&T's entry into the unregulated data processing market. On the basis of information DOJ takes no position on whether the decree should be reopened, but states that it will review all comments and arguments in this proceeding for and against modification of the decree.

56. Irrespective of the positions of AT&T and DOJ with respect to the consent decree, numerous parties to this proceeding argue that the implications of the consent decree should not prevent the establishment of a regulatory structure or policy favoring unregulated terminal equipment, nor should its existence be the basis for promulgating an artificial need to regulate CPE to avoid potential conflict over consent decree matters. IBM, for example, supports any modification of the consent decree thought necessary to allow AT&T to compete in the data processing area on an unregulated basis and believes that AT&T should be given a reasonable amount of time to obtain modification of the decree; it notes, however, that any changes to a consent decree should be made by a fully informed court and not indirectly by regulatory action. AHTUC believes that the Bell System should be permitted to provide unregulated data processing services when, because of blurred distinctions, this becomes necessary for the fulfillment of its future communications responsibilities. It submits that legislation should be enacted to make certain that an AT&T subsidiary may lawfully offer non-regulated data processing services.

F. Legislation

57. Issue (d) of the *Supplemental Notice* focused on the need, if any, for legislation to deal with the convergence of data processing and communications from a regulatory standpoint. The general consensus is that any legislative attempt to deal with the confluence of data processing and communications would be premature with the potential for making rigid an environment that requires flexibility in regulatory policies. USS noted that the danger of legislation is that it could retard or otherwise distort the development of future services that do not conform to the environment envisioned in the legislation. It is argued that the Communications Act affords sufficient flexibility in the area of "computer communications" such that no specific legislative proposals are needed at this time. Some parties base their conclusion that the Act affords sufficient flexibility on the belief that the Commission has discretion not to regulate, or to forbear from regulation when a determination is made that non-regulation is in the public interest. IBM, for instance believes the Commission's power to forbear is beyond doubt; however, it urges the Commission to ask Congress to confirm that power if the Commission believes it to be necessary. ADAPSO submits that legislation should be sought permitting the Commission to vary the quantity of regulation of common carriers so as to meet the requirements of the moment; such regulation could even take the form of total regulatory forbearance, with regulation available on a stand-by basis. It contends that this would eliminate the need for a comprehensive, one-time decision.

58. SCRMW, a public interest organization, looks to Congress and the

[54] United Computing Systems, Inc., (UCS) states that the Commission should not attempt to indirectly modify the consent decree; the introductory phrase of § 64.702(c), which prohibits the Bell System from offering data processing services even through a separate subsidiary, should not be deleted.

[55] *Swift & Co.* v. *U.S.*, 286 U.S. 106, 119 (1932). IBM notes, however, that cases cited by DOJ that indicate difficulty in changing consent decrees deal with attempts by a private party to obtain changes that were opposed by the Government. Courts are reluctant to modify such decrees when the Government, as the party representing the public interest, opposes attempts at modification. It notes, however, that courts generally approve changes that are agreed to by both parties.

Commission for a clear statement of what the "public interest" is perceived to be. Its specific recommendations include requiring Congress to include computer services within the definition of "common carriers" as that term has been applied in the past, and Section 201 of the Act. Moreover, either this Commission or some other agency should be authorized to rule on the provision of computer services and hardware on the basis of "public welfare" considerations rather than "economic" considerations. Moreover it suggests that Congress should take steps "to facilitate the decentralization of the information structure of the United States" to the limits of available technology, including the provision of financial support and technical assistance to local cooperatives and other associations capable of operating "public information utilities." [56]

III. Tentative Decision

A. Summary

59. This proceeding was initiated to: a) foster a regulatory environment conducive to the stimulation of economic activity in the regulated communications sector with respect to the provision of new and innovative communications-related offerings; and b) enable the communications user to optimize his use of common carrier communication facilities and services by taking advantage of the ever increasing market applications of computer processing technology. Implicit in these objectives is the need to establish a regulatory scheme which gives primary consideration to user needs and availability of adequate communications services to the public. This requires that carriers be afforded sufficient flexibility to tailor their services to individual user needs. Underlying these objectives are the regulatory responsibilities to minimize the potential for improper cross-subsidization, safeguard against anticompetitive carrier behavior, and the need to protect the quality and efficiency of telephone service.

60. In the *Notices* we attempted to more clearly delineate those computer processing activities and resulting services which carriers may render as part of a common carrier communications service. In so doing we stated that our intent was to maintain the maximum separation policy and not extend the arm of regulation to data processing services. Within this framework the *Notices* focused on three specific areas: a) proposed revisions to the definitional structure of Section 64.702; b) whether any definitional scheme ultimately adopted should be applied to carrier offerings of customer-premises equipment with information processing capabilities and, if not, under what condition carriers may offer such equipment, as part of a regulated communications offering; and c) the need, if any, for more definitive legislation in addressing the confluence of data processing and communications.[57]

61. Upon review of the comments filed in this proceeding, we have concluded that the definitional structure as proposed in the *Notices* is an inadequate means of accomplishing our stated objectives. Moreover, it has become increasingly apparent that any solution to the regulatory concerns raised by the merging of communications and data processing applications, short of a stop-gap measure, must address the structure under which competitive services are provided. A structure has been set forth under which various communications common carrier services must be provided. In this regard we distinguish between three categories of services—"voice", "basic non-voice", and "enhanced non-voice" services. We conclude that "voice" and "basic non-voice" services are divorced from the communcations/data processing controversy. We require that "enhanced non-voice" services be provided on a resale basis. Thus in an interstate "enhanced non-voice" service, all common carrier transmission facilities are acquired pursuant to tariff.

62. Since an "enhanced non-voice" service by definition subsumes both communications and data processing services, a definitional structure is employed for distinguishing those "enhanced non-voice" services which are communications services from those which constitute the offering of a data processing service. This definitional structure basically allows a carrier to perform "data processing" as part of a communications service as long as such processing does not result in a "data processing service" (as we define it) and directly relates to and is for the purpose of providing a communications service. We recognize that this will not completely eliminate the need for case-by-case determinations, but it should substantially minimize this need, while providing the marketplace with a greater degree of certainty.

63. The structural separation of "voice" and "basic non-voice" services from "enhanced non-voice" services permits us to address in a different manner the cross subsidization and anticompetitive concerns of the maximum separation policy. A carrier having an ownership interest in transmission facilities used in the provision of interstate voice or "basic non-voice" services may provide an "enhanced non-voice" service only through a separate corporate resale entity. Moreover, subject to certain exemptions, the computer facilities of a carrier (including carriers falling under Section 2(b)(2) of the Act) which are used in the provision of interstate "voice" or "basic non-voice" services may not be used for those additional processing requirements necessary for "enhanced non-voice" services. These two forms of separation provide an adequate substitute for the existing maximum separation requirements. Accordingly, a resale carrier could provide both communications services and data processing services through its computer facilities.

64. With respect to the provision by carriers of customer-premises equipment, we note that the provision of such equipment, in and of itself, is not a common carrier activity. This does not mean that carriers may not provide various terminal devices in conjunction with a communications service. In view of the dynamic nature of computer processing applications which can be incorporated into such devices and the applications which are under the user's control, we do not apply a definitional structure to the processing capabilities incorporated within customer-premises equipment. Instead, we distinguish between devices which function as transducers or basic media conversion devices, and those which do more. We conclude that carrier-provided transducers and basic media conversion devices may be provided as part of a "voice" or "basic non-voice" service. With respect to that class of equipment which performs more than a basic media conversion function, we conclude that there should be no requirement that such equipment be tariffed as part of a communications service. However, if a carrier desires to provide such equipment as part of a communications offering, it may only be offered in conjunction with an "enhanced non-voice" communications service. Thus,

[56] It favors the "creation of an agency which is decentralized to the greatest extent possible so that all Americans can continuously comment on and direct the evolution of the national systems of information and communication."

[57] We noted that while reference to specific service offerings would be helpful in bringing various concerns to the attention of the Commission, the purpose of this proceeding was not to judge the merits of a particular service since we are concerned here with policies and rules of general applicability. See, *Supplemental Notice*, paras. 11 and 12.

equipment which performs more than a basic media conversion function may be offered on a tariffed basis only by a resale carrier. Otherwise it must be offered on a non-tariffed basis through a separate corporate entity. We note, moreover, the possibility of lessening (under this structure) the nature and scope of regulation as applied to resale carriers providing "enhanced non-voice" services and customer premises equipment, but not without first addressing the implications of the 1956 AT&T consent decree.

B. Service Structure

65. At the time the existing computer rules were adopted the market applications of computer technology were limited to large-scale centralized computer services. However, large-scale integrated circuitry and microprocessor technology have dramatically altered the manner in which services can be offered. The market applications of computer processing technology makes the customization of services possible, either through equipment located on the customer's premises or within a carrier's network. For reasons which we discuss later, we believe that, in addressing the regulatory problems which arise as a result of new market applications of computer processing technology, a distinction should be drawn between the services which a carrier provides on a network basis and the provision of customer's-premises equipment which may be used in conjunction with network services to increase the utilization of the common carrier service. We first look at network services and the need to address the computer processing activities under the carrier's control.

66. A regulatory structure must be established which adequately addresses present and foreseeable market applications of computer processing technology. In this regard certain observations can be made with respect to current hybrid services. The confluence of communications and data processing has developed to such a degree that the possible combinations and permutations of services which can be offered are limited solely by the constraints technology imposes on the processing capabilities of equipment and concomitant software applications. Augmentation of transmission and switching services by data processing applications is enormously beneficial to communications users. Computer technology and computer programming applications render any limitation of the variety of services available to the user merely a factor of how the information processing applications are structured within the computer equipment attached to a carrier's transmission facilities. Thus, the nature of these services are determined not by the transmission facilities but, rather, by the specific processing applications offered through equipment attached to the channel of communication. The implications for the communications sector become readily apparent. A regulatory scheme which limits services that can be provided through computer facilities imposes a limitation on the economic use of the equipment; and, in so doing, imposes an artificial economic barrier to the provision of new and innovative services which may serve to inhibit entry into the communications field. For the consumer there is the potential deprivation of needed or desired services. Such may be the impact of our existing computer rules. It would appear more appropriate in light of current market applications to establish a structure under which a computer facility could be used to provide any hybrid service. This is premised on the need to establish a regulatory scheme which addresses the convergence of communications and data processing in a manner which gives primary consideration to users needs and the availability of adequate services to the public in the data communications market. The comments of carriers and non-carriers alike amply demonstrate the need for flexibility in tailoring services to meet the individual communication needs of the user. From the user's perspective, what is important is not whether a service is classified as communications or data processing, but that regulation not inhibit the user's ability to acquire needed communications services and facilities in an economic and reasonable fashion. The comments also point out that to the extent that services must be classified as "communications" or "data processing" for regulatory purposes, such a regulatory classification should not result in an artificial structure whereby less flexibility is afforded to tailor a service to individualized user needs.

67. After reviewing the comments filed in this proceeding we conclude that a revised definitional structure, standing alone, does not adequately address the issues before us. In this respect the *Notices* were too narrowly focused. While it is possible to concentrate solely on the permissible processing activities that may be engaged in by a carrier as part of a communications service, this by itself is not sufficient. Continued reliance on a pure definitional approach merely accentuates the controversy over whether communications is incidental to data processing or data processing is incidental to communications. Such philosophical discussions serve no useful purpose. It has become more than evident in reviewing the comments that any solution which focuses merely on the definitional boundary between data processing and communications is a short term solution and one which fails to recognize and take advantage of the potential for new and innovative competitive data communications services. The central issue is the movement of information and the ability of communications common carriers to provide the services necessary for the electronic transmission of information in a manner dictated by the needs of the consumer. The regulatory problems arising because of the interplay of data processing and communications must be addressed by way of a comprehensive solution and not in terms of stop-gap measures. This is necesary if there is to be certainty in the marketplace and avoidance of excessive regulatory intervention as to the nature and degree of permissible computer processing engaged in by carriers. Moreover, a comprehensive solution must consider the realities of the marketplace and accommodate computer technology and its market applications within a framework which enables us to carry out the responsibilities entrusted to us by Congress under the Communications Act of 1934, as amended.

68. The framework for a consistent and forward looking regulatory policy in this area must focus on the nature of various categories of services and the structure under which they are provided. This is necessary if our regulatory environment is to accommodate and be in harmony with the ever continuing convergence of communications and data processing market applications. A regulatory scheme can be adopted which relies in part on a definitional structure for distinguising regulated communication services from unregulated data processing services and, at the same time, addresses the structure under which certain common carrier communications services are provided. The vehicle which now makes this possible is the Commission's *Resale Decision.*[55] This decision established the concept of a resale entity as a common carrier under the regulatory scheme of

[55] *Regulatory Policies Concerning Resale and Shared Use of Common Carrier Services and Facilities* (Resale and Shared Use), Docket No. 20097, 60 F.C.C. 2d 261 (1976), recon. 62 F.C.C. 2d 588 (1977), aff'd American Telephone and Telegraph Company v. *FCC*, 572 F. 2d 17 (2d Cir. 1978), cert. denied, —— U.S. ——, 47 U.S.L.W. 3225 (1978).

the Communications Act and allowed for flexible communications services to be offered through resale carriers utilizing communications facilities acquired from an "underlying" carrier. In essence, it makes it now possible for us to establish a regulatory structure under which a distinction can be made between services where the market applications of computer processing technology do not act as a constraint on the class of service offered and services which are inextricably intertwined in the convergence of communications and data processing such as to affect the nature of the service offered.

69. The essence of such a structure requires the division of common carrier communications services into three classes. Common carrier communications services can be classified as "voice", "basic non-voice", and "enhanced non-voice" services. We define these three categories of services as follows: 1) A voice service is the electronic transmission of the human voice such that one human being can orally converse with another human being. 2) A "basic non-voice" service is the transmission of subscriber inputted information or data where the carrier: (a) Electrically converts originating messages to signals which are compatible with a transmission medium, (b) routes these signals through the network to the appropriate destination, (c) maintains signal integrity in the presence of noise and other impairments to transmission, (d) corrects transmission errors, and (e) converts the electrical signals to usable form at the destination.[59] 3) An "enhanced non-voice service" is any non-voice service which is more than the "basic" service, where computer processing applications are used to act on the form, content, code, protocol, etc., of the inputted information.

70. In establishing these three categories of service, computer processing applications employed within a carrier's network in conjunction with "voice" and "basic non-voice" services can be performed without restriction on the use of data processing applications utilized within the framework of these two services.[60] It is primarily when carriers seek to provide "enhanced non-voice" service that uncertainty arises as to the nature of the service and whether maximum separation applies. This is because the category of "enhanced non-voice" service subsumes both regulated communications and unregulated data processing services. Yet it is in this area where the potential is the greatest for the offering of new and innovative competitive communications services. Within this category the rendering of a communications or a data processing service is primarily a factor of how computer processing applications interact with the user's inputted information, and it is here that the Commission's computer rules have delineated permissible computer processing activity by communications common carriers.

71. Our attention, therefore, is focused upon the establishment of a regulatory structure under which carriers can provide "enhanced nonvoice" services free from regulatory constraints as to the communications or data processing nature of the service. In so doing, we distinguish between the three categories of service, and distinguish between services offered by carriers owning their own transmission facilities and services offered by pure resale carriers who do not own their own facilities but, rather, acquire the necessary transmission facilties from an underlying carrier pursuant to tariff. We see the separation of "voice" and "basic non-voice" services from "enhanced non-voice" services as being essential to the establishment of an environment conducive to the provision of "enhanced non-voice" services on a competitive basis. At the heart of this separation is the need to: a) protect the quality and efficiency of telephone service, b) insure the availability of transparent common carrier transmission facilities to all on an equal basis, and c) minimize the potential for improper cross subsidization and/or anti-competitive behavior. In order to provide the necessary regulatory safeguards in these areas and still foster a competitive environment where services can be custom tailored to the individual needs of the user, we conclude: first, communications common carriers owning transmission facilities[61] used in the provision of interstate communications services may directly provide only "voice" and "basic non-voice" services. Second, carriers owning such transmission facilities may provide "enhanced non-voice" services only through a separate corporate entity on a resale basis. Third, the computer facilities of the underlying carrier which are used in the interstate provision of "voice" and "basic non-voice" services may not be used for those computer processing applications associated with "enhanced non-voice" services and which would render the service more than a "basic non-voice" service. In essence, the basic thrust of our regulatory structure is the requirement that interstate "enhanced non-voice" services be provided on a resale basis where all common carrier transmission facilities necessary for the provision of the "enhanced non-voice" service are acquired pursuant to tariff.[62]

72. There are significant public interest benefits inherent in this structure which accrue to carriers, consumers, and this Commission alike. With respect to carriers it provides a regulatory environment conducive to the rendering of new and innovative competitive communications offerings by allowing resale carriers to take full advantage of computer technology and its market applications. The resale structure allows us to do away with the "separate facilities" requirement of our maximum separation policy for resale carriers. Now both communications and data processing services may be provided through the computer facilities of the resale carrier. A resale carrier need only tariff its communication service while offering a data processing service as a non-tariffed option. Because the provision of "enhanced non-voice" services is primarily a factor of the equipment design and programming applications which take place within the equipment attached to the channel of communication, services can be custom tailored to individual user needs.

[59] In essence, the information is delivered in its original data format, code, or protocol to the addressee, and programmed actions are not taken on the basis of the content of the information transmitted in order to produce a response or control the routing of the message.

[60] We are not foreclosing enhanced processing applications from being performed in conjunction with "voice" service. Certain applications may be considered essential or necessary. These applications may even eventually involve human-to-computer voice synthesis or speech recognition. Computer processing applications such as call forwarding, speed calling, directory assistance, itemized billing, traffic management studies, voice encryption, etc., may be used in conjunction with "voice" service. Moreover, advanced technology, such as packet switching, etc., may be used in conjunction with "basic non-voice" service as we have defined it. A carrier is free to take advantage of available technology in providing these two categories of service. Moreover, it should be noted that, since human-to-computer *services* would fall into the "enhanced non-voice" category, the "non-voice" designation does not exclude voice transmission as part of the service.

[61] As used in this context a "transmission facility" is the communications "pipeline" where channels of communication are provided for the transmission of voice and non-voice services.

[62] In establishing this structure we are relying on the principle established by the *Resale Decision*. By this *Tentative Decision* we are requiring that access, facilities, and network capacity of the underlying carrier must be available to all resale carriers on an equal basis pursuant to tariff, and that all "enhanced non-voice" communication services must be provided on a resale basis. It should be noted that we are adopting a domestic policy. We are not requiring that this structure be extended to the international arena.

Moreover, this structure is consistent with previous policy determinations in that it does not extend the arm of regulation to unregulated entities providing data processing services. At a minimum, it allows for the provision of customized communication services in a competitive environment, where new and innovative services can be provided in response to the demands of the marketplace.

73. From the Commission's perspective this resale structure enables us to meet our regulatory responsibilities as identified in the *First Computer Inquiry*, 28 FCC 2d at 302, and minimizes the potential for cross-subsidization and anti-competitive behavior. The marketing of "enhanced non-voice" services along with the computer equipment and programming used in the provision of such services is isolated from the provision of the underlying more basic common carriage offering. In classifying that category of services which is inextricably intertwined with the convergence of communications and data processing, and requiring that only a certain class of carriers provide such services, the Commission is afforded flexibility in varying the nature and degree of regulation to be exercised over resale carriers while continuing to enforce the traditional regulatory controls over the underlying carriers providing basic services to the entire population. Moreover, an environment is created where the licensed transmission facilities of a carrier are available to all providers of "enhanced" services on the same basis, i.e. in terms of access, interconnection, rates, etc. The common carrier transmission facility necessary for the provision of an "enhanced" service becomes a separate part of the service which must be acquired pursuant to applicable tariff by any carrier entity, whether that entity is the resale entity of the underlying carrier, an existing resale carrier, or a new entrant. Since the transmission facilities must be acquired pursuant to tariff, the potential for using the transmission component of the service, to subsidize a new or innovative service is substantially minimized. The isolation of the transmission component enables any carrier to provide an enhanced non-voice communications service on the same basis, without threat of unfair competitive advantage accruing to a given carrier by virtue of its control over the underlying transmission facilities. The tranmission facility would be common to all entities and removed as a competitive element of the service. Whatever cross-subsidization exists is limited primarily to the competitive portion of the service, i.e., the computer equipment and the marketing and packaging of its processing applications, which could possibly be addressed if need be through the use of accounting procedures which are now undergoing reexamination in our *Uniform System of Accounts* proceeding.

74. This regulatory structure has distinct benefits over the existing manner in which hybrid services are provided. It is in the "enhanced non-voice" arena where the existing maximum separation policy may serve to artificially constrain or structure services and the use of carrier computer equipment by requiring that only regulated services be provided via computer equipment used in the provision of such services.[63] By separating out those services which must be provided on a "resale" basis, a structure is provided whereby the concerns which prompted the maximum separation policy are substantially minimized. It permits "enhanced" services to be provided under a framework which does not require communications and data processing services to be provided through separate entities with separate equipment. While this structure does not negate the need to establish a regulatory boundary between communications and data processing services, since both types of services are subsumed within the "enhanced" non-voice category, it substantially reduces the impact any determination as to the communications or data processing nature of an offering would have on the availability of services to the consumer. Whereas under the existing rules a determination that a particular service constitutes a data processing service would foreclose a carrier from offering the particular service or processing application, under this structure the data processing service could still be offered as a non-tariffed option by the resale carrier.[64]

75. In addition, this structure requires the facilities of the underlying carrier to be transparent to the information transmitted and for a carrier to provide a "pure transmission" service which forms the basis upon which all "enhanced" services are provided. This should have the added benefit of minimizing the potential for unnecessary duplication of network systems in order to accommodate a particular service that might otherwise be foreclosed if the transmission facility was conditioned in a manner which would inhibit the provision of the service. The underlying carrier's transmission facilities become the basic building block upon which computer facilities can be added to perform myriad combinations and permutations of processing activities.

76. We are aware, however, that our *Resale Decision* is not applicable to the international arena. Accordingly, the structure would not be applicable to the international record carriers (IRCs). What we have set forth here is a structure under which domestic carriers may provide "enhanced non-voice" services. The services of the IRCs would continue to be subject to the definitional approach (*discussed infra*) and our maximum separation policy. We are also aware that certain underlying carriers may currently be providing service which constitute more than a "basic non-voice" service. A transition period may be required to accommodate current services, but it would be up to a carrier to demonstrate the need for any grandfathering or waiver beyond the transition period.

C. Definitional Structure for Distinguishing "Enhanced Non-Voice" Network Services

77. The foregoing establishes the resale structure under which common carriers may provide "enhanced" non-voice services. Of the three categories of services that we have established—"voice", "basic non-voice", and "enhanced non-voice"—"voice" and "basic non-voice" services may employ any computer processing applications as long as they do not change the nature of the service. The category of "enhanced non-voice" service includes both enhanced non-voice communications services and enhanced non-voice data processing services. It is at this level that we must decide what services must be offered on a tariff basis by resale carriers as distinguished from those services which may be offered on a non-tariff basis. We have recognized that computer technology and its market applications have resulted in the introduction of new communications and data processing services—which could not have been addressed in the *First Computer Inquiry*—but which must now be addressed. There is, therefore, a need for a clear delineation of the permissible uses of computers by

[63] Constraints can take many forms and impose unnecessary regulatory intervention on the part of the Commission. Every processing activity becomes subject to potential scrutiny once the principle is established that computer equipment can only be used for certain processing activities. With changing technology and new market applications attempts are constantly made to alter or more clearly define the regulatory boundary as to the limit of permissible processing activity that may be performed.

[64] The 1956 AT&T consent decree, however, may impose unique constraints on AT&T in this regard.

carriers in providing communication services, and to minimize uncertainties for those making business decisions related to the provision of new and innovative communications services.[65]

78. The purpose of a definitional structure is to establish a regulatory boundary between regulated communication offerings and those unregulated computer processing activities which do not result in the offering of a common carrier communication service. The existing Section 64.702(a) is inadequate in this regard primarily because it was formulated at a time when processing capabilities were limited to large-scale central host computers; its inherent deficiencies rest with the fact that it reflects this environment. For example, in order for a service to be considered "hybrid" remote access data processing and message switching must be combined to form a "single integrated service." In certain situations this determination can be made; but in reality it may simply be a factor of how the offering entity packages the service.[66] In addition, the standard for determining whether a service is hybrid data processing or hybrid communications is stated in terms of whether the message switching being performed is "incidental" to the data processing function or purpose. While this standard was useful in an environment where processing activities were confined to centralized computers, with the advent of distributed processing, it is insufficient to talk solely in terms of the message switching being "incidental" to the data processing since the message switching function is an essential component to any distributed processing system. The regulatory focus should be upon the service being offered and not merely upon performance of a message switching function. Another deficiency is in the definition of "data processing." "Data processing" is currently defined by distinguishing it from circuit or message switching by essentially delineating the use of a computer for the processing of information for purposes other than message switching as data processing.[67] While data processing may be performed as part of a communications service, the current definitions focus more on the presence of various processing functions such as storing, merging, retrieving, etc., than on the *use* to which they are put. No attempt is made to distinguish the legitimate uses of data processing as part of a communications service from the provision of a data processing *service*.

79. With the advent of distributed processing computer processing capabilities can be placed anywhere within the network. A revised definitional structure is needed to address this environment. Rather than attempting to artificially construe the present § 64.702 in a manner suitable to present day offerings, with the prospect of ambiguity and uncertainty, the definitional structure of § 64.702 should be restructured in a manner which provides carriers with a clearer delineation of permissible processing activity. Moreover, it is necessary to approach the communications/data processing controversy from a perspective which does not merely identify the presence of a data processing activity but, rather, from a perspective which identifies the regulated or non-regulated nature of the service provided by a carrier. There are many market applications of data processing which do not result in the provision of a data processing service. For these reasons we are revising the definitional structure of § 64.702(a), and more clearly stating the extent to which carriers may engage in computer processing applications as part of a regulated communications offering.

80. We proposed a new definition of data processing in the *Notices* and inquired whether it correctly divides "communications" and "data processing" and whether it would be conducive to carrier flexibility and innovation. We also inquired whether the proposal would be administratively enforceable and in the public interest. The comments indicated that, contrary to affording flexibility and innovation, the proposed definitional structure could have the opposite effect primarily due to uncertainty over possible interpretations of what was proposed. It appears we may have attempted to do too much by way of a single definition. From the carrier's perspective the "programmed response" criterion contained in part (b) of the proposed definition of "data processing" generically describes all computer processing capabilities. This certainly was not the intent. Our intent was not to prevent a carrier from utilizing data processing necessary for the provision of a communications service.[68] Moreover, it is argued that the combined effect of the proposed definition and examples of data processing "activities"[69] would served to inhibit carrier offerings of new and innovative services. From the perspective of the unregulated sector, uncertainty exists as to whether hybrid data processing services would be regulated or whether a single element of data processing would render the total offering unregulated. This stems in part from our proposal to eliminate the hybrid categories contained in the existing computer rules and to establish communications and data processing as mutually exclusive activities for regulatory purposes. Despite the fact that various comments did not favor this approach, it was generally thought that with sufficient clarification and modification a workable definitional structure could be adopted.

81. Rather than adopting the definition of data processing proposed in the *Notices*, we are revising § 64.702(a) taking into consideration the comments and suggestions filed in this proceeding. Appendix B contains the revised § 64.702. This definitional structure generically describes "computer processing". Moreover, a distinction is made between the use of "data processing" and the provision of a "data processing service", making it clear that data processing may be performed as part of a regulated communications service without necessarily resulting in the offering of a data processing service. The concept of "mutually exclusive" categories as proposed in the *Notice* is not retained. Instead, a primary purpose standard is incorporated which allows for *ad hoc* determinations in considering the regulated or non-regulated nature of a carriers offering. The "hybrid data processing" classification is retained, which continues to recognize the legitimate use of communication facilities by unregulated entities in the provision of data processing services. The foregoing is a more flexible approach which does not result in a rigid definitional structure and, we believe, provides the needed basis for determining those computer processing applications which may be offered as part of a common carrier service.

[65] As a practical matter when the Commission makes findings regarding specific computer services which may not be rendered by a carrier as part of its regulated communications offering, this will guide non-carriers as to the services they may offer without coming under the FCC's regulatory umbrella.

[66] Cf: *The Western Union Telegraph Company*, 59 FCC 2d 140 (1976), *recon. denied* 62 FCC 2d 518 (1976), wherein four collateral services were found to be data processing considered apart from the basic SICOM service. A determining factor in finding the collaterals not to be part of a "single integrated service" was the fact that they were being added to a service already being offered. Could the same determination have been made if SICOM and the collateral services were being offered in combination for the first time?

[67] See fn. 5, *supra*.

[68] This would severely restrict the ability of a carrier to provide innovative communication services and would be contrary to existing practice.

[69] See paragraph 13, *supra*.

82. The standard for determining permissible carrier activity in the present computer rules is contained in the definition of message switching, i.e., "* * * the transmission of messages between two or more points, via communication facilities, wherein the content of the information remains unaltered." This fundamental characteristic of a common carrier communications service is retained as the basis of the definitional structure we are proposing. In essence, basic concepts established in the *First Computer Inquiry* are being applied to computer processing applications which have developed since that time to define what market applications may be incorporated as part of a common carrier communications service. The function or role of communications common carriage is to provide the means for transmitting subscriber initiated messages or information between two or more points and having that information arrive at the destination intended by the subscriber without the content of the message or information being altered by the carrier in the course of transmission.

83. The new § 64.702(a) which we intend to adopt contains the definitions which form the basis for determining those computer processing application which may be offered as part of a carrier's tariffed communication offering. This Section reads as follows:

§ 64.702 Furnishing of computer processing services;

(a) For the purpose of this subpart—

(1) "Computer Processing" is the use of a computer for processing information where the output information constitutes a programmed response to input information. The term "computer" encompasses, *inter alia*: general purpose stored program processors, general and special purpose mini-computers and microprocessors. "Processing" entails the use of a computer for operations upon data which include, *inter alia:* arithmetic and logical operations, storage, retrieval, and transfer.

(2) "Data processing" is the computer processing of imput information for the purpose of providing additional, different, or restructured information.

(3) A "data processing service" is the offering for hire of computer processing capabilities for the purpose of: (a) Transforming or altering for the subscriber of the service the information content or meaning of information provided by the subscriber; or (b) maintaining, managing, or providing a data information bank or information retrieval service whereby information may be selectively retrieved by or for a subscriber to the service; or (c) monitoring or controlling an on-going non-communications process or event.

(4) "Hybrid data processing service" is an offering of a data processing service utilizing common carrier communications facilities for the transmission of data between remote computers and customer terminals.

84. The definition of "computer processing" is taken from part (b) of our proposed definition of data processing.[70] In addition we define "data processing" is that processing which acts on the message or information to provide different information than that provided by the subscriber or, without altering the content of the information, results in the provision of additional or restructured subscriber information. We distinguish between data processing as an computer processing activity and the provision of a "data processing service." For example, data processing which is used for the purpose of transmitting and routing a subscriber message or data information does not result in the provision of a "data processing service". Under subpart (a) of the definition of "data processing service" the offering of a data processing service results when computer processing capabilities are offered for hire for the purpose of transforming or altering the information content or meaning of information provided by the subscriber. Part (b) of the definition of "data processing service" addresses information retrieval services and part (c) addresses various process control operations.

85. We recognize that a carrier may perform information retrieval and process control operations in the routing of messages or information in the provision of a communications service. The mere performance of these operations by a carrier does not necessarily result in the rendering of a data processing service. The emphasis is on the service being offered. Part (b) of our definition of "data processing service" focuses upon the presence of a data base within the carriers network to provide an information retrieval service or to store information which is not necessary for the provision of a communications service or a carrier's own internal management needs. Moreover, a complete prohibition on the use of what may be categorized as "process control" would deny carriers the legitimate use of computer processing applications such as "polling" of communication channels and "automatic call distribution". These types of applications are not covered by the phrase "non-communications" in subsection (c) of the definition of "data processing service". Process control applications which constitute the rendering of a noncommunications process would include such applications as monitoring a nuclear-powered generating station, electric power distribution grids, automatic machine tools, etc. Thus, we distinguish between process control applications which monitor the flow, routing, and transmission of a subscriber's messages into and through the communications network, and those process control applications which are not dependent upon, or result from a subscriber initiated message or information. An example of the former case might be the provision of a security alarm service where a signal is generated at the subscriber's premises and then routed by the carrier to the nearest emergency or security center. An example of the latter situation might be where computer facilities within the carrier's network are monitoring a customer's premises and generating signals which are not dependent upon input from the customer. This latter case of process control constitutes unilateral action by the carrier independent of any message sent by a subscriber, and does not constitute a communications service wherein the carrier is offering to carry subscriber initiated messages or information. The analogy may be applicable to other services where the service being rendered is actually dependent upon a carrier monitoring a process rather than the transmission of a subscriber initiated message or information. Such process control applications fall within the ambit of part (c) of the definition of "data processing service."

Hybrid

86. We recognize the inadequacy of the hybrid service definitions in the existing rule.[71] We have also taken note of the comments by parties to this proceeding which addressed the inadequacy of our treatment of services which would have formerly fallen within the hybrid category. Since it was generally felt that mutually exclusive

[70] We stated in the *Notices* that the intent of part (b) of the proposed definition was to include process control and proprietary information retrieval services within the category of processing activities which may not be offered as part of a communications service. While we stated this to be our intent, the language of part (b) was more comprehensive. Under the new § 64.702 we are addressing information retrieval services and process control services within the definition of "data processing service."

[71] The existing rules set forth two criteria for regulatory classification under "hybrid"—"incidental" and "single integrated service".

categories would result in too rigid a definitional structure, we have retained the "hybrid" concept through reliance on a primary purpose test. Section 64.702(a)(4) defines a "hybrid data processing service" to be the offering of a data processing service which is dependent upon the use of communication facilities. Section 64.702(b) is a statement of the processing which a carrier may utilize in the provision of a communications service. This section states:

> Communications common carriers may utilize computer processing, including data processing, in the provision of a communications service; provided, however, that any data processing performed by a carrier as part of a tariffed service must directly relate to and be for the purpose of providing a communication service, or for meeting the carrier's own internal operational and financial management needs.

87. Under this section a carrier may perform data processing as part of a communications offering as long as the data processing directly relates to and is for the purpose of providing a communications service or meeting its own in-house needs. This recognizes that there are legitimate uses of data processing in the provision of a communications service. Under this structure the need for a "hybrid communications" category is eliminated. By stating that carriers may engage in data processing and communications processing in the provision of a communications service, explicit recognition is given to the previous classification of a "hybrid communications service." However, where the data processing performed does not result in the offering of a "data processing service" (as defined) and, at the same time, is not directly related to or for the purose of providing a communications service, then a carrier may not engage in such data processing as part of a regulated communications offering.

88. While this definitional structure should provide greater certainty in the marketplace, it will not completely eliminate the need for case-by-case determinations. In this regard we will look to the primary purpose of the processing performed in determining whether the computer processing activities of a carrier, which do not constitute a data processing service, are properly part of a communications service. Accordingly, we are not adopting our original proposal to rely on examples [72] of various processing activities as guides in determining permissible data processing activity.

D. Electronic Message Services

89. The question has been raised as to the regulatory status of computer message services. The potential exists for users of certain unregulated services to use a data processing system for store and forward message services (sometimes referred to as computer message services, electronic message services, "mail-box",[73] etc.). This is particularly applicable to time-sharing services where the computer facilities are structured in a manner such that the customer can write his own program and, in effect, use the time-sharing network for his own store and forward message service needs. The fact that unregulated, entities may provide transmission services as a part of the unregulated data processing creates the potential for a subscriber to use the unregulated entities computer facilities for service comparable to those obtainable from communication common carriers.

90. The fundamental characteristic of a common carrier communications service is the transmission of a subscriber's message through the telecommunications network without alteration of the content of the message in the course of transmission. An entity offerng a communication common carrier service may do so only subject to Title II of the Act and Commission's rules implementing Title II. There is a distinction, however, between the offering of store and forward message service and the offering of computer capacity which allows the users to perform a host of different functions depending upon the programmed instructions of the user. The offering of a pure store and forward message service has traditionally been subject to regulation under Title II of the Act. The ability to use the computer capacity inherent in a data processing service for the transmission or retrieval of unaltered messages may or may not subject the offering entity to common carrier regulation depending upon the nature of the service. Determinative factors may include: whether the offering entity provides within its facilities or offers to the user the software or programs necessary to use the system on a pure store and forward basis, whether the offering entity solicits subscribers to the service on the basis of the system's store and forward message capabilities,[74] or whether the offering entity sanctions directly or indirectly the use of its service for such purposes. As in the *First Computer Inquiry*, we rely on competing interests in the marketplace to bring to the Commission's attention abuses by unregulated entities in the circumvention of Commission policies and guidelines, especially with respect to the offering of a pure store and forward message service.

E. Customer-Premises Equipment

Developments

91. A distinction can be made between the processing capabilities incorporated within a carrier's network and the processing capabilities within customer-premises equipment.[75] From its inception, telecommunications has involved end-to-end transfer of information over communications channels (originally wires). Electrical signals transmitted over the communication channels were converted into a form intelligible to humans by devices at each end of the channel called "transducers". In telegraphy, the transducers originally were telegraph keys and sounders; these devices were largely supplanted by teletypewriters.[76] In telephony, the transducers originally were telephone handsets. Telephones remain the most common transducers supplied by telephone carriers.

92. By the mid-1930's, when Congress adopted the Communications Act, telephone and telegraph carriers were furnishing communication channels and transducers to provide the public end-to-end communication services. Moreover, the carriers furnished the service of

[72] E.G., those listed in paragraphs 13 and 14, *supra*.

[73] In a typical mail-box application Party A, who wished to send a message to Party B, would compose a message at his terminal, and, over a communications line, direct the message to a computer memory location having the address, "Party B." Party B can periodically communicate with the computer using his terminal, and withdraw the contents of his memory location for display at the terminal. This is, in effect, a store and forward communications service in which the information content of the originating message is not changed.

[74] If the offeror of the service solicits subscribers on this basis and disseminates a general access code for all customers the offering may be subject to regulation.

[75] "Customer-premises equipment" is terminal equipment located at a subscriber's premises which is connected with the termination of a carrier's communication channel(s) at that subscriber's premises. Certain equipment of limited function, while physically located at the customer's premises, is thought of as part of the channel termination and not "terminal equipment," such as lightning protectors, splicing devices and connectors. Our definition here is not intended to alter this. In general, the line is drawn at the network interface to the terminal equipment, which is defined in services currently subject to those rules, MTS and WATS.

[76] Telegraph key/sounder apparatus has largely been so supplanted, but not totally. AT&T still offers such Morse equipment in its tariffs today for use with private line service. *See* Private Line Service, Tariff F.C.C. No. 260, Section 4.9.

routing or directing a subscriber's communication to a particular recipient. Thus, the telegraph and record carriers would physically deliver messages to recipients, while the telephone carriers would receive from the caller the recipient's "address" (usually, a telephone number) and set up the desired end-to-end communications channel. In the case of a switched connection, the channel was set up for the duration of the call either by an operator's manual action, or by switching equipment within the central office.

93. In the same time frame, premises equipment having additional functions began to appear. Early key telephone systems (also called "wiring plans") began to be offered to perform limited switching among telephone channels at customer premises; these systems allowed single telephones to be switched among various telephone and intercommunication channels. Similarly, PBXs which used an attendant at the customer's premises to perform such switching and intercommunication began to be offered; these systems also moved switching functions which previously were only offered within the carriers' central facilities to the customer's premises. Finally, although generally not available in the United States, telephone answering equipment began to be offered which would record incoming telephone calls and play them back at a later time to the user. Although these emerging forms of premises equipment began to do more than act solely as transducers, they were generally thought of as so closely related to telephone instruments as to be treated in the same manner by regulatory agencies and the carriers. Thus, they were offered in tariffs duplicative of those offering telephones, and their rates were regulated in much the same manner.

94. Even more recently, other uses and functions have emerged in premises equipment. Teletypewriters, for example, originaly were used purely for record communications either by, or in connection with services offered by, telegraph and record carriers. With the development of remotely-accessible computers, they became the predominant form of computer input/output terminal, although their design remained unchanged as their character of use changed. The teletypewriter art today, using technological innovations of the computer industry and in recognition of their common usage with remote computers, has progressed to the point where teletypewriting terminals no longer only reproduce input information which apears at their keyboard or paper tape reader inputs. Today's "smart" teletypewriters, or data terminals, are themselves miniature computers with information-processing capabilities used to generate information and to operate on and alter information received at their inputs.

95. Computers themselves, when connected to communication channels at a customer's premises (and not in the carriers' facilities, the case considered in the *First Computer Inquiry*) are customer-premises equipment with respect to the communication channels. The computers are obviously more than "communications" devices, for they operate on and alter information which traverses them.

96. There is an increasing trend towards integration of various communication and information processing functions in single systems and pieces of apparatus, which previously were treated and configured separately. Thus, while in the past separate systems handled document reproduction, intra-company information distribution, telephone communication, and "data processing", today there is movement towards combining these functions in single systems which use processing capabilities which economically can be shared among such disparate uses. A single unit or system today can handle traditional voice communications (often with extra features such as delayed message handling), reproduction of written copy (facsimile and electronic photocopying functions), document preparation (text-editing) and information storage and retrieval (often with information routinely updated through the communications channel, e.g. inventory, stock market status, credit authorization-listing, etc.). This trend too is moving premises equipment used with the carriers' communication channels away from its traditional status as tranducing equipment.

97. The marketing of "smart" remote-access data terminals which incorporate microprocessor technology (miniature computers) and new forms of local memory have accelerated the loss of identity between what previously was generally thought of as "communications" equipment. User versatility has been enhanced in these terminals by configuring them so that the *user* can determine their functions, capabilities and uses to best fit his needs by altering their programming. These highly sophistication user terminals are being offered both by communications common carriers and by the unregulated equipment manufactured sector. To the extent that the carriers are offering such devices in conjunction with their regulated communications offerings, the processing functions capabilties and uses—which are often not even under the carriers' control—have become enmeshed in the regulatory controversy over the proper boundary between regulated "communications" offerings and unregulated "data processing" offerings. Moreover, with the advent of digital networks and new forms of terminal devices to be used with these networks, combinations of equipment and software packages customized to individual subscriber needs will increasingly be offered.

98. While these trends are most manifest in customer-premises equipment largely used with computers and data processing systems, they are also appearing in expanded-function telephone instruments not generally though of as part of the "data processing" field. For example, "telephones" are now available which combine in a single unit the functions of a basic telephone transducer and a calculator. Other expanded-function "telephones" can store and retrieve often-called telephone numbers, while still others can remember the last number called, and when a busy signal is reached automatically re-dial that number until the desired call is completed. These developments too, are indicative of a general trend towards integration of processing functions with basic communications customer-premises equipment.

Regulatory Concerns

99. The expansion of the inquiry to address equipment related issues was premised in part on regulatory problems raised by AT&T's offering of a "smart" teletypewriter terminal, the Dataspeed 40/4,[77] and the recognition that our existing policies and rules fail to address the processing capabilities incorporated into carrier-provided customer-premises equipment. In addressing the tariffability of AT&T's Dataspeed 40/4 offering, we found that processing functions which historically had been built into large computers increasingly are moving into data terminals used at customer premises and that such premises equipment increasingly is being used both for communications and data processing purposes. We noted that our existing communications/data processing rules were adopted at a time when the

[77] See fn. 7, *Supra*. Our decision in this matter was made subject to any subsequent determination made in this proceeding.

majority of data processings applications were implemented by large-scale general purpose computers at centralized locations and fail to address those processing capabilities which are now being moved into remotely-located input/output terminal devices.

100. In the *Supplemental Notice* comments were sought regarding the role of communications common carriers in the offering of customer premises equipment and the conditions, etc., under which carriers should be permitted to make such offerings. We invited comment on the regulator and policy issues raised by the increasing incorporation and utilization of computer-processing capabilities into customer-premises equipment provided by communication common carriers as part of the regulated communication offerings. We inquired as to the advisability of classifying customer-premises equipment as "data processing" or "communications" under any definitional structure that might be adopted, and the public interest implication of such a classification. We also recognized, however, that such classification might not be practical or possible and requested comments on an alternative regulatory scheme. We requested comments on whether the offering of customer-premises equipment which performs more than basic media conversion is a communications common carrier activity, and solicited comments on appropriate intstitutional arrangements, terms, conditions, and regulations under the communications common carriers might be permitted to offer such equipment.

101. The developments already noted with respect to the processing capabilities which can be incorporated into terminal devices through the use of microprocessor technology raise concern over the use to which such processing capabilities can be put when offered as part of a communications service. If any regulatory scheme for distinguishing common carrier communication services from unregulated data processing services were to focus upon the processing capabilities of premises equipment, this would necessitate the classifying of processing capabilities within such devices. There are public interest considerations, however, which dictate against classifying the data processing or communications nature or processing capabilities of such consumer equipment.

102. The underlying telecommunications network is relatively stable and, because of massive numbers of existing equipment and plant operationally dependent upon the network's characteristics, any changes in the network will occur gradually. An introduction of "data processing" into shared or common telephone network facilities can workably be the subject of classificaton between "communications" and "data processing", the classification scheme which formed the basis of the *First Computer Inquiry*. However, there simply is no design stability in the terminal equipment field. Different customers require different equipment, often uniquely designed for and tailored to their specific information processing and data processing needs. There is constant technological change, product innovation and refinement, and development of new markets and sub-markets in this field, which are not inhibited by large capital outlays such as may be required in introducing new technology into the network.

103. The comments compellingly make the point that any classification or definitional boundary which is premised on distinguishing the processing capabilities of the device is likely to be arbitrary, interfere with economical design of equipment, and be easily circumvented. Terminal devices are taking on more funtions and intelligence and are increasingly incorporated data processsing characteristics. The comments point out that any attempt at classifying terminal equipment as "communications" or "data processing" will result in a regulatory quagmire necessitating numerous *ah hoc* determinations as to the nature of the processing functions performed by the device. It is argued that customer-premises equipment is too rapidly changing to be subject to a classification scheme based on processing capabilities. Yet, as the comments point out, new and inhanced communications services must be provided if the user's information handling needs are to be met. In order for there to be new and innovative services carriers must have flexibility in designing their communication systems. Technoligical sophistication has reched a point where the processing needs of the user can be placed where it makes economic sense to do so, and, in fact, it is argued that it is the processing needs of the user which should determine where the computer processing capabilities should be placed, i.e., whether within the communications network, or within the terminal equipment located on the customer's premises. Yet it is argued that if a definitional structure is applied to the processing capabilities of carrier provided customer-premises equipment, for purposes of determining a regulatory boundary, carriers could be restricted or inhibited in the offering of new and innovative services services to meet user needs. It is argued that if a carrier provides a terminal it should be permitted to make the terminal as useable as possible.

104. In the current environment of "smart" teletypewriter and data terminals, classifications of the function and use of such equipment increasingly is being determined by the user, and not the equipment supplier. The development of microprocessors has made it possible, and in many cases economically desirable, to define the funcitons and uses of the terminal equipment by "software" instructions supplied by the user or the equipment supplier rather than by physical "hardware" which the user is not likely to alter. One such terminal might be programmed by its user to perform communications functions; another, identical to the first when supplied, might be programmed by its user to perform data processing functions.

105. Any classification of customer-premises equipment based on its processing capabilities has the potential for interfering with equipment suppliers' design options by forcing, perhaps uneconomically, the inclusion or deletion of functions or features to place the equipment under one or the other of the classifications. A classification scheme carries the risk of impeding suppliers' ability to tailor their offerings to the specific requirements of users, for fear of reclassifying the supplier's activities. Thus, an arbitrary distinction betwen "communications" and "data processing" capabilities, functions or uses in customer-premises equipment could impede a supplier's ability to refine and adapt its offerings to user requirements for the various combinations and permutations of computer processing applications, often accomplished by simple "software" or "hardware" changes to existing equipment. In the extreme case, such an arbitrary distinction might require separate units to perform functions which otherwise economically could and should be performed by one unit, using the same microprocessors to perform both processing and communications functions.

106. Where a reasonable alternative exists which does not seriously jeopardize the availability or costs of equipment or services to be used by the public, such alternatives merit serious consideration. We believe such a situation exists here. The unique and dynamic nature of terminal equipment

devices capable of use in connection with the telecommunications network compels us to adopt a regulatory approach different from the one we have adopted to deal with the processing capabilities within a carrier's network. We conclude that the processing capabilities of carrier provided customer-premises equipment should not be subject to the definitional structure of Section 64.702(a), nor should a separate classification scheme be adopted which attempts to classify such devices as either "communications" or "data processing". Similarly, we are rejecting, for customer-premises equipment, a classification approach which distinguishes between equipment which is primarily "communications" and that which is primarily "data processing" based on the processing capabilities of the device.

107. It is evident that there are certain carrier offerings of customer-premises equipment which are necessary for subscriber utilization of the communications channel(s) and may properly be provided as part of a communications offering. This is not the case with respect to all customer-premises equipment, especially that consumer equipment which is oriented toward enhancing or satisfying the user's computer processing requirements locally within the terminal device. Specifically, we believe there is a fundamental distinction between those premises equipments which serve only as transducers or basic media conversion devices, and those which provide a variety of on-premises information processing functions. We conclude that the public interest requires that this distinction be reflected in both the institutional and regulatory framework applicable to the supply of such equipment. We have set forth a structure under which various categories of common carrier services may be provided. The manner in which we have divided the various categories of service, for purpose of addressing permissible compute processing activity, is also conducive to structuring the manner in which the various types of equipment are provided. We conclude that carrier-provided transducers and basic media conversion devices may be provided as part of a voice or "basic non-voice" service. With respect to that class of equipment which performs more than a basic media conversion function, we conclude that there should be no requirement that such equipment be tariffed as part of a communications service. However, if a carrier desires to tariff such equipment as part of a communications offering, it may only be offered in conjunction with an "enhanced non-voice" communications service. Thus, equipment which performs more than a basic media conversion function may be offered on a tariffed basis only by a resale carrier. Otherwise it must be offered on a non-tariffed basis through a separate corporate entity.[78]

Transducers and Basic Media Conversion Equipment Defined

108. A transducer is a two-port device (an input and an output port) which converts input energy of one form to output energy of another. For example, the input port might convert human inputs into electrical signals capable of transmission, while the output port would convert electrical transmission signals into a form intelligible to humans.

109. The transducers which properly are contemplated by the regulatory scheme as necessary for the provision of end-to-end interstate communications service include telephones, teletypewriters, facsimile terminals, signature reproduction terminals (a primitive form of a facsimile terminal) and electronic display devices such as cathode-ray tube (CRT) and luminescent displays.

110. Additional functions have been incorporated into customer-premises equipment used primarily as transducers, to make the transducers more useful for communications. These functions include *signaling* capabilities to set up and take down the communications channels, and peripheral equipment functions which *facilitate* the *basic transducing and signaling function.*[79]

111. Basic media conversion devices are two (or more) port devices which do not necessarily change the form of their input and output energy, but which serve as the interface between dissimilar media for information transfer. This category is broader than transducers, and includes transducers within it. Examples of basic media conversion devices include modulator/demodulator (MODEM) or dataset equipment which serve as the interface between analog and digital transmission media, and devices which "read" paper or magnetic tapes and which serve as the interface between a communications channel and paper or magnetic storage media, and basic communication path switching in PBX and key telephone systems.

Regulatory Authority

112. In creating the Federal Communications Commission (FCC) Congress gave this agency the mandate ". . . to make available, so far as possible, to all people of the United States a rapid, efficient, Nationwide and world-wide wire and radio communication service with adequate facilities at reasonable charges . . ."[80] In carrying out this mandate Congress made clear that the Commission's jurisdiction extends ". . . to all interstate and foreign communication by wire or radio. . . ."[81] In defining "communication by wire" section 3(a) of the Act states that it ". . . means the transmission of writing, signs, signals, pictures and sounds of all kinds . . . including all instrumentalities, facilities, apparatus, and services . . . incidental to such transmission."[82]

113. Since customer-premises equipment represents "instrumentalities", "facilities" or "apparatus" incidental to the interstate communication channel offerings which we regulate, it is argued that *any* such equipment offered by a common carrier is required to be offered on a regulated basis. It is argued that the "all instrumentalities" provision of Section 3 of the Act brings such devices within the scope of "common carrier" communications services and that they become part and parcel of the common carrier communications service. The contention is made that all customer-premises equipment offered by a carrier in connection with, in support of, or incidental to transmission in its public communication service offering is part of communications common carriage, regardless of the functional capabilities of the equipment.[83] In addressing these arguments, an analysis must be made of Commission jurisdiction over customer-premises equipment, the nature of the Commission's duties and responsibilities with respect to carrier offerings of customer-premises equipment, and whether the Communications Act requires that all such equipment be offered pursuant to tariffs filed with this

[78] Carriers offering "enhanced non-voice" services through a resale entity need not establish another entity for the provision of such equipment, since sufficient separation already exists from the provision of "voice" and "basic non-voice" services to alleviate potential anticompetitive subsidies running from these services.

[79] This would include refresh memory devices used with scanned CRT displays which increase the persistence of such displays to visibility by the human eye, dialing and switchhook functions within various basic transducers.

[80] 47 U.S.C. 151.

[81] 47 U.S.C. 152(a).

[82] 47 U.S.C. 153(a). Section 3(b) of the Act, 47 U.S.C. 153(b) defines "communications by radio" and closely parallels the "all instrumentalities" language of Section 3(a).

[83] See, in particular, comments filed by AT&T, GTE, and USITA.

Commission when offered by communications common carriers.

114. Various considerations are relevant in this regard with respect to the "all instrumentalities" provision. One consideration weighing on the meaning of the "all instrumentalities . . ." language of Section 3(a) is whether this language implies that all customer-premises equipment used for interstate communications is required to be pervasively regulated under the complete panoply of Title II of the Communications Act, e.g. Sections 201–05, subject only to the limitations of Sections 2(b) and 221(b) of the Act. Another consideration weighing on the meaning of the "all instrumentalities . . ." language of Section 3(a) is its construction in *NCUC* v. *FCC*, 552 F.2d 1036 (4th Cir., 1977), *cert. denied* 434 U.S. 874, and *NCYC* v. *FCC*, 537 F.2d 787 (4th Cir. 1976), *cert. denied* 429 U.S. 1027 (1976), upholding the Commission's assertion of jurisdiction over the provision of customer-premises equipment through our telephone equipment registration program. There we facilitated the ability of consumers to connect their own equipment to the network if that equipment conformed to certain technical standards and was properly registered with the Commission. This program was held consistent with the "all instrumentalities . . ." language of Section 3(a), despite opponents suggestions that such registration made equipment suppliers subject to direct regulation under the Communications Act. Thus, these cases demonstrate that the Commission may select from a broad array of administrative tools in order to regulate "all instrumentalities" under Sections 2(a) and 3(a) of the Act.

115. There is a clear distinction to be made between our jurisdiction over "all instrumentalities" under Sections 2(a) and 3(a), and the discretion we have in deciding how best to implement that jurisdiction in the public interest. The "all instrumentalties" language of Section 3 of the Act and Sections 201–205, which prescribe certain responsibilities, duties, and powers with respect to common carrier communication services subject to the Act, have their origin in the Interstate Commerce Act (ICA) of 1887 [84] specifically the so-called Hepburn Amendments [85] to the ICA. To understand the Congressional intent behind these sections in the Communications Act, it is helpful to examine the appropriate legislative history.

116. Prior to enactment of the Hepburn Amendments, the Elkins Act of 1903,[86] which amended the original ICA, had forbidden rebates by railroads to favored shippers because the "rebate" could be used as a vehicle to circumvent adherence to published tariffs. The railroads had been avoiding this proscription against rebates by leasing facilities such as cars, trackage, and other services from favored shippers at inflated rates. By paying exorbitantly high rates for the use of such facilities or other services performed by the shipper, the railroads were, in effect, giving the shipper a rebate on the total cost of transporting the shipper's goods. The consequence of such discriminatory practices was that certain shippers were able to transport their goods at lower rates than other shippers. In order to put a halt to such discriminatory practices Congress adopted the so-called "Hepburn Amendments" to the ICA.[87] The Hepburn Act expanded the definition of the term "transportation" to include ". . . all instrumentalities and facilities of shipment or carriage, irrespective of ownership or of any contract . . . and all services in connection with the receipt, delivery, elevation, and transfer in transit, ventilation, refrigeration or icing, storage, and handling of property transported . . .",[88] and gave the ICC jurisdiction over such activities as they affect a carrier's rates, changes, and practices associated with "transportation". By giving a broader meaning to the terms "railroad" and "transportation" to include "all instrumentalities" and the necessary means of accommodation in transit, it was thought that the possibility of secret rebates of all kinds would be done away with.[89]

117. The "all instrumentalities" provision and the various provisions giving the ICC authority over rates, charges and carrier practices set forth in the Hepburn Act were subsequently to become the foundation for comparable provisions in the Communications Act. It is clear that in basing provisions of the Communications Act on comparable provisions of the ICA, Congress was attempting to confer on the FCC the same power granted to the ICC over carrier rates, charges and practices with respect to "all instrumentalities." In the Senate Report accompanying what later became the Communications Act of 1934 it is stated:

> In this bill many provisions are copied verbatim from the Interstate Commerce Act because they apply directly to communication companies doing a common carrier business, but in some paragraphs the language is simplified and clarified. These variances or departures from the text of the Interstate Commerce Act are made for the purpose of clarification in their application to communications, rather than as a manifestation of congressional intent to attain a different objective. S. Rep. No. 781, 73d Cong., 2d Sess. 2 (1934).[90]

118. The legislative history demonstrates that this Commission has a mandate which compels, at a minimum, that any carrier charge, practice, classification or regulation in connection with the offering of a communications service be just and reasonable. This is what Congress intended in basing Section 201–205 of the Communications Act on comparable provisions in the Hepburn Amendments, i.e., to give the FCC the ability to regulate any charge or practice associated with a common carrier service in order to insure that the carrier operated for the public benefit. Based on this grant of authority we have exercised and continue to exercise jurisdiction over carrier provided customer-premises equipment.[91]

119. In addition to the relationship between the "all instrumentalities" provision and responsibilities under Section 201–205 of the Act, Section 3 (a) and (b) confer subject matter jurisdiction over "all instrumentalities" necessary to effect the Commission's mandate under Sections 1 and 2(a) of

[84] Senate Report 781, 73d Cong., 2d Sess. 4 (1934). Section 3(a) closely parallels the definition of "transporation" in Section (3) of the ICA. Section 201(a) is adopted from Section 1(5) and (6) of the ICA. Section 202 combines Sections 2 and 3(1) of the IRC; Section 203(a) adopts Section 6(1) of the ICA; Section 204 is adopted from Section 15(7) of the ICA; Section 205 follows Sections 15(1) and 16(8) of the ICA, in part.

[85] Hepburn Act of 1906, 34 Stat. 584.

[86] 32 Stat. 847

[87] *See*, House Committee on Interstate and Foreign Commerce, Powers of the Interstate Commerce Commission, H.R. Rep. No. 591, 59th Cong., 1st Sess. (1906) (hereinafter cited as "Hepburn Hearings").

[88] 49 U.S.C. 1(3) (a).

[89] Hepburn Hearings 1911 (1906). See H.R. Report No. 591, pp. 3–4, Jan. 27, 1906, 40 Cong. Rec. 1657; remarks of Mr. Townsend, 40 Cong. Rec. 1763–1770 (1906); remarks of Mr. Knapp, 40 Cong. Rec. 1893–1897 (1906); remarks of Mr. Hinshaw, 40 Cong. Rec. 1778 (1906); remarks of Mr. Stevens, 40 Cong. Rec. 2081 (1906); remarks of Mr. French, 40 Cong. Rec. 1911 (1906).

[90] *See, American Telephone and Telephone Co.* v. *FCC.*, 487 F. 2d 865, 879 (2d Cir. 1973).

[91] *See, Use of Recording Devices*, 11 FCC 1033 (1947); *Katz* v. *AT&T*, 43 FCC 1328 (1953); *Jordophone Corp.* v. *AT&T*, 18 FCC 644 (1954); *Hush-a-Phone Corp.* v. *United States*, 238 F. 2d 266 (D.C. Cir. 1956), *decision on remand*, 22 FCC 112 (1957); *Carterfone*, 13 FCC 2d 420, *recon. den.*, 14 FCC 2d 571 (1968); *AT&T "Foreign Attachment" Tariff Revisions*, 15 FCC 2d 605 (1968), *recon. den.*, 18 FCC 2d 871 (1969); *Department of Defense* v. *General Telephone Co.*, 38 FCC 2d 803 (1973), *review denied*, FCC 73–854, *Aff'd per curiam sub nom. St. Joseph Telephone & Telegraph Co.* v. *FCC*, 505 F. 2d 476 (D.C. Cir. 1974).

the Act. This nexus was recognized, for example, when we established a registration program for all terminal equipment attached to the interstate telephone line network, where previously attachment of non-carrier supplied terminal equipment had been restricted by telephone company tariffs.[92] The registration program permits customers to attach any registered terminal equipment [93] to the network without being forced to use certain carrier supplied intermediary devices. The courts have upheld this program as a proper and reasonable exercise of our jurisdiction over the interconnection of customer-provided terminal equipment within the national telecommunications network.[94]

120. The central issues here are (1) whether the Communications Act precludes common carriers from providing customer-premises equipment unless it is part of a tariffed offering, and (2) whether the Commission has discretion to establish conditions under which carriers may offer such equipment. While it is well recognized that joint equipment is not beyond federal jurisdiction should the need for federal action arise,[95] the legislative history of the Communications Act manifests no Congressional intent that all carrier-provided customer-premises equipment be offered on a regulated basis subject to the tariff requirements of Section 203 of the Act, or that such equipment *must* be offered as "part and parcel" of a communications service. In this regard the provision of customer-premises equipment, itself, is not an activity which under the common law construction of common carrier can be construed as common carriage. The fact that a communications common carrier may provide such equipment as part of its common carriage function does not mean that the provision of equipment is a common carrier activity. Common carrier status is not conferred on an entity which does nothing more than manufacture and market customer-premises equipment.[96] However, because a particular activity by itself is not a common carrier activity, does not mean that a carrier cannot engage in such activity as part of its common carrier function.[97]

121. The Communications Act provides amply flexibility to enable the Commission to establish public interest parameters under which carriers may offer customer-premises equipment which perform more than a basic media conversion function.[98] The Commission was given "expansive powers" to tailor regulation as appropriate to fit the needs of the highly complex and rapidly changing communications industry.[99] To this end we have established a structure which leaves carriers the choice of providing customer-premises equipment under either a tariff or non-tariff basis.

122. The manner in which we have exercised our discretion in this area of customer-premises equipment is consistent with the regulatory scheme established by Congress. We find nothing in the "all instrumentalities" clause or other provisions of the Communications Act, in prior judicial decisions, or in prior practices of this Commission which would deny us the discretion to regulate a carrier's provision of consumer equipment in this manner. We have seen that when sophisticated terminal equipment is provided on a competitive basis, the public reaps dividends in the form of rapid innovation which will meet consumer's communications need in terms of quality and cost. *AT&T charges for Interstate Telephone Service* (Docket 19129), 64 FCC 2d 1, 26–29 (1977). to this end we distinguish between those devices which are transducers and basic media conversion devices and those which perform more than basic media conversion, and we establish the conditions under which the latter may be offered by carriers. We conclude that the public interest will best be served if customer-premises equipment which performs more than a basic media conversion function is offered by a carrier on a tariffed basis only through its resale subsidiary in conjunction with "enhanced non-voice" services. If a carrier chooses not to offer such equipment as part and parcel of a communications service, it may be marketed through a separate resale or other subsidiary. This structure will ensure that basis communications services are not burdened by improper subsidization to sophisticated terminal offerings while at the same time providing flexibility and incentives for new and efficient terminal offerings.

F. Maximum Separation Policy

123. The *First Computer Inquiry* set forth a structure under which carriers could compete in the provision of data processing services. It was decided that there should be a complete separation of a carriers regulated services from its unregulated data processing ventures. This came to be known as the "maximum separation policy." In *GTE Service Corp.* v. *FCC* the court affirmed our authority to promulgate rules regulating the entrance of communications common carriers into the non-regulated field of data processing services.[100] Section 64.702 implements our maximum separation policy and essentially "prescribes the conditions under which common carriers may engage in the offering of data processing services to others." [101] The rules we adopted in the *First Computer Inquiry* were designed to ensure the continued provision of efficient and economic communications service to the public.[102] In affirming the existing computer rules the court noted that "the expansive power of the Commission of the electronic communications field includes the jurisdictional authority to regulate carrier activities in an area as intimately related to the communications industry as that of computer services, where such activities may substantially affect the efficient provision of reasonably priced

[92] *In the matter of Proposals for New or Revised Classes of Interstate and Foreign Message Toll Telephone Service (MTS and Wide Area Telephone Services) (WATS). First Report and Order*, 56 FCC 2d 593 (1975); *aff'd sub nom. North Carolina Utilities Commission* v. *FCC*, 552 F. 2d 1036 (4th Cir. 1977).

[93] In *NCUC* v. *FCC*, 552 F. 2d 1036 at 1040 the phrase "terminal equipment" was stated to refer to devices utilized for transmission or reception of communications when attached to the national telecommunications network and includes *inter alia* residential telephones, key telephones, answering devices, dialers, computer terminals and private branch exchanges (PBS's).

[94] *In the Matter of Telerent Leasing Corp., et al.*, 45 FCC 2d 204 (1974), *aff'd sub nom. North Carolina Utilities Commission* v. *FCC*, 537 F. 2d 787 (4th Cir. 1976); *cert. denied*, 429 U.S. 1027 (1976).

[95] *North Carolina Utilities Commission* v. *FCC*, 552 F. 2d 1036, 1050.

[96] Cf. *Ellis* v. *Interstate Commerce Commission*, 237 U.S. 434 (1914).

[97] *See, Cleveland & St. Louis RR Co.* v. *Dettlebach*, 239 U.S. 588, at 594 (1915).

[98] There is a distinction between the inability of agency to choose whether to regulate an activity which Congress has mandated the regulation of, and the discretion properly accorded an agency in choosing how to implement a regulatory scheme established by Congress. *See, FPC* v. *Texaco Inc.*, 417 U.S. 380 (1974); *American Telephone and Telegraph Co.* v. *FCC*, 572 F. 2d 17 (2d Cir. 1978), *cert. denied*, —— U.S. ——, 47 U.S.L.W. 3225 (1978). Because of the rapidly evolving nature of terminal equipment (the use of which is under the customer's control) and the need to provide carriers with flexibility in determining the degree to which processing capabilities should be distributed between the carrier's network and its terminal devices, we are not at this time foreclosing a carrier from offering such devices as part of a communications service. We are, however, establishing the conditions under which such equipment may be provided on tariffed basis. We are not altering the regulatory scrutiny traditionally given terminal equipment offered as part of a communications service.

[99] *NBC* v. *United States*, 319 U.S. 190.219; (19) *See also, United States* v. *Southwestern Cable Co.*, 392 U.S. 157, 172–73 (1968); *FCC* v. *Pottsville Broadcasting Co.*, 309 U.S. 134, 138 (1940); *Philadelphia Television Broadcasting Co.* v. *FCC*, 123 U.S. App. D.C. 298, 300, 359 F. 2d 282, 284 (1966); *Naruc* v. *FCC*, 525 F. 2d 630, 638 (1976).

[100] *GTE Service Corp.* v. *FCC*, 474 (2d Cir. 1973).

[101] Id. at 728.

[102] Id. at 730.

communications service." [103] The court affirmed our application of the maximum separation requirements to all carriers, including carriers falling within Section 2(b) of the Act. It noted that connecting carriers are subject to Sections 201–205 of the Communications Act, and therefore the Commission has "jurisdiction over the connecting carrier's services, charges and practices which are part of the uninterrupted and indivisible national system of telephone service." [104]

124. The maximum separation policy was adopted to:

> * * * assure (a) that such services will not adversely affect the provision of efficient and economic common carrier services; (b) that the costs related to the furnishing of such services will not be passed on directly or indirectly, to the users of common carrier services; (c) that revenues derived from common carrier services will not be used to subsidize any data processing services; and (d) that the furnishing of such services will not inhibit free and fair competition between communication common carriers and data processing companies or otherwise involve practices contrary to the policies and prohibitions of the antitrust laws. *Tentative Decision* at para 34.

In adopting this policy, however, we made clear that

> * * * we are not seeking to regulate data processing as such, nor are we attempting to regulate the substance of any carrier's offerings of data processing. Rather we are limiting regulation to requirements respecting the framework in which a carrier may publicly offer particular non-regulated services, the nature and characteristics of which require separation before predictable abuses are given opportunity to arise. *Final Decision* at para 30.

125. The objectives of the maximum separation policy are still valid today. Carriers should not be permitted to burden their regulated communication services with costs properly allocable to their unregulated ventures to the detriment of users of communications common carriage facilities; nor should carriers be able to impose on the users of common carrier services the risks of loss that attend ventures in competitive areas, or sacrifice quality or efficiency in their regulated services. However, the specific rules which implement these objectives were formulated based on the market applications of computer technology prevalent at that time. With the advent of distributed processing the present rules may well inhibit the flexibility and availability of services designed to meet the unique communications needs of particular users or a class of users. This situation can be remedied by addressing in a different manner the concerns which gave rise to the need for a complete separation between a carrier's regulated and unregulated activities.

126. The structure we have set forth for the provision of "voice", "basic" non-voice, and "enhanced non-voice" services allows us to address these concerns and, at the same time, provides a framework which enables communications common carriers to tailor their services to the individualized needs of the user. Rather than requiring the separation between various forms of "enhanced" non-voice services as under the existing rules we have structured the provision of carrier services so as to remove any regulatory constraints as to the market applications of computer technology while minimizing the potential for adverse impact on underlying communications services. The resale structure allows us to address the concerns of the *First Computer Inquiry* with respect to both the potential impact that dual usage of a carrier's network facilities for both regulated and unregulated offerings might have on the quality or efficiency of regulated communications services (primarily telephone at that time), and the cross-subsidization and anticompetitive concerns. It also allows us to address these concerns in a manner comparable to that under the maximum separation rules, but on a different level. Whereas the maximum separation rules require the complete separation of computer facilities used in the provision of regulated and unregulated services, we are now limiting the processing application that may be offered in conjunction with "voice" and "basic non-voice" services, while allowing resale carriers to use their facilities for any service or processing application without restriction. Moreover, because the provider of an "enhanced non-voice" service is dependent upon the "basic non-voice" services of an underlying carrier, the transmission component is isolated such that the additional processing applications inherent in the provision of "enhanced non-voice" services will not impair the quality or efficiency of voice service, or adversely affect the "basic" transmission service of the underlying carrier.

127. The existing maximum separation rules require a degree of corporate separaton in the provision by carriers of unregulated services. This separation is maintained insofar as we are requiring that a carrier having an ownership interest in transmision facilities used in the provision of interstate "voice" or "basic non-voice" services, can provide "enhanced" non-voice services only through a separate corporate resale entity. [105] Because the transmission component of any "enhanced non-voice" service must be acquired pursuant to tariff, the terms and conditions of which are subject to the requirements of Section 201–205 of the Act, we can control the potential for underlying carriers to support their "enhanced" services with revenues derived from their "basic" service offerings or to engage in other anticompetitive practices. The exercise of our regulatory responsibilities with respect to the marketing of "enhanced non-voice" services can be addressed, if need be, through accounting procedures rather than through maintenance of the "separate facilities" requirement of the maximum separation policy. This structure provides an adequate safeguard against significant anticompetitive behavior and allows resale carriers to provide services without restriction as to the nature of the processing application offered.

128. The fact that processing capabilities can be placed either within the carrier's network or within equipment located on the customer's premises has forced us to address the provision of terminal equipment as part of a common carrier communications service. This proceeding focuses on those devices with information processing capabilities and whether such devices should be subject to a definitional structure similar to that applied for distinguishing communications and data processing services. We have concluded, for reasons already discussed, that such equipment should not be subject to a definitional scheme which would classify either the device or its functions as communications or data processing. We found that devices which perform more than a basic media conversion function are not a necessary part of a common carrier communications service and need not be provided as part of the service. However, we stopped short of precluding the offering of such devices as part of a common carrier service. There are two reasons for this. In the first place we have established a structure under which a carrier may provide both communications and data processing services through the same entity. To this extent the carrier can provide the device and, in effect, let the

[103] Id. at 731.

[104] Id. at 736.

[105] As in the existing rules we exempt various carriers whose total revenues fall below one million dollars since such carriers are not likely to engage in the provision of "enhanced" non-voice services to any extent which is likely to conflict with our regulatory concerns.

consumer how the device is used—whether for communication or data processing applications. Secondly, an exclusionary policy could have a potential detremental effect on the availability of both existing and future terminal devices because of the inability of AT&T and/or Western Electric to market or manufacture such devices due to restrictions imposed by the 1956 consent decree.[106]

129. While we have not foreclosed carriers from providing customer-premises equipment which performs more than basic media conversion function, we have established a structure for the provision of this type of equipment when offered as part of a common carrier communications service. Just as we have separated the various categories of services based on those which can be provided without concern as to the nature of the processing employed, so we separate the kinds of terminal equipment which can be offered by underlying carriers. We distinguish basic media conversion devices from those devices which incorporate information processing capabilities. Only basic media conversion devices may be provided in conjuction with a "voice" or "basic non-voice" service. If a carrier desires to tariff as part of a communications offering equipment which performs more than a basic media conversion function, such equipment must be provded under the structure set forth for the provision of "enhanced non-voice" services. If a carrier chooses not to offer this type of equipment as part of a resale communications service, such equipment may be marketed on a non-tariffed basis through a separate corporate entity.[107] We believe this is a reasonable method whereby all carriers can provide equipment on a competitive basis unencumbered by the prospect of *ad hoc* regulatory intervention. Moreover, because the statutory scheme for regulation of interstate common carrier communications in part is dependent upon intrastate offerings by connecting carriers as well as more directly regulated interstate offerings,[108] this requirement is applicable to connecting carriers as well as carriers which are subject to direct regulation by the FCC.[109]

130. By this action we are *not* preventing communications common carriers from providing customer-premises terminal equipment. We are only establishing structural safeguards which limit how the carriers provide certain equipment not offered as part of a communications service. Moreover, we are not limiting the carriers' flexibility by this decision. Under the classification scheme which we are adopting for premises terminal equipment, we are avoiding arbitrary and uneconomic distinctions between "communications" and "data processing" capabilities, and *increasing* the carriers' flexibility in meeting user needs. A carrier would be free to supply *any* premises terminal equipment, regardless of the computer processing capabilities it incorporates.

131. Of course, the fact that there must be a separate corporate entity for provision of "enhanced non-voice" services and sophisticated customer-premises equipment requires that there be a separation from the underlying carrier's provision of "voice" and "basic non-voice" services. However, it would be premature for us at this time to establish the exact nature and degree of separation required. The record developed to date in this proceeding does not adequately address the separation which should exist between the underlying carrier and its resale subsidiary. Accordingly, based on the record before us, we cannot make any findings as to the appropriate degree of "separateness" we should prescribe.

132. The nature and degree of separation required should be considered and weighed on a relative basis. There are various cost/benefit factors associated with various levels of separation and the same degree of separation may not be necessary for all affiliated entities operating under the resale structure. On the one hand, certain economies may exist in a vertically integrated structure. The sharing of personnel, officers,[110] advertising and publicity, physical space, research and develoment, procurement, and other corporate activities may allow the combined entities to realize significant savings to be passed on to the ratepayers. On the other hand, we recognize the need to ensure that the competitive subsidiary competes fairly in the market place and is not the recipient of unfair cross-subsidization from monopoly services offered by the underlying carrier. In this regard, certain requirements may be necessary for carriers having a *de facto* monopoly in a given market in order to properly effectuate a proper degree of separation between an underlying monopoly-based carrier and its resale subsidiary. For example, when the resale subsidiary purchases equipment from another subsidiary which is under direct or common control of a monopoly-based carrier it may be necessary to require the resale subsidiary to purchase its equipment on an "arms-length" basis. Moreover, where any subsidiary under direct or common control of a monopoly-based carrier engages in research and development efforts funded wholly or in part with communications-derived revenues, it may be desirable to have the results of such research made available to the commonly controlled resale subsidiary only on a licensing basis and made available to all resale entities under the same terms and conditions. Moreover, if a monopoly-based carrier purchases services or equipment from an affiliated resale entity it may be necessary to require competitive bidding in order to prevent the underlying carrier from paying inflated prices and passing the costs on to the monopoly service customers.

133. In reaching a final decision in this matter we have the option of establishing certain minimum "separation" requirements, or leaving such matters to *ad hoc* determination. In the event minimum separation requirements are established, we believe that consideration should be given to the various costs and benefits associated with a given degree of separation, especially those mentioned above. Various pleadings filed in this proceeding have suggested use of stringent accounting methods as a means of identifying improper cross-subsidization of competitive services with monopoly-based revenues. When used in conjunction with the separate subsidiary concept, accounting may serve as a useful regulatory tool to check certain abuses. We note, however, that our present proceeding to revise the Uniform System of Accounts for telephone companies, CC Docket No. 78-196, see 70 FCC 2d 719 (1978), is far from complete at this time. In view of public interest benefits to be derived from establishment of a competitive environment, we seek comments, prior to our adoption of a final decision in the instant proceeding, as to the cost-benefit tradeoffs of various degrees of "separateness" of separate entities established in connection with the provision of "enhanced non-voice" services and sophisticated terminal equipment.

[106] See footnote 14, *supra*.

[107] See footnote 78, above

[108] See, e.g., *Smith* v. *Illinois Bell Telephone Co.*, 282 U.S. 133 (1930).

[109] *GTE Service Corp.* v. *FCC*, 474 F. 2d 724, 736-37.

[110] In this regard, we seek comment as to whether we should impose any restriction on interlocking directorates among affiliated entities established pursuant to this proceeding.

G. Regulatory Flexibility

134. We intend to look into the possibilities of reducing or minimizing the nature and degree of regulation which should be exercised over various carriers subject to the Act. This re-examination is primarily a result of the competitive changes taking place in the communications industry. The Act affords the Commission flexibility in this regard, and it may well be that regulation over selective carriers can be substantially minimized, particularly in view of the structure we have set forth. If the degree of regulation over various carriers is modified, it would of course be applicable to carriers operating under the structure established in the Tentative Decision. To the extent that regulation is minimized, there is correspondingly a lesser chance that regulation would inhibit the provision of new or innovative services or the entry of new service providers.

H. 1956 AT&T Consent Decree

135. A basic question which must be addressed is the extent to which AT&T will be able to participate on an unregulated basis in the provision of customer-premises equipment and/or "enhanced non-voice" services under the 1956 AT&T consent decree. The possible effect the decree may have on AT&T's ability to offer certain types of equipment and services is a factor to consider in reaching a final decision. Our basic premise is that the consent decree should not constrain this Commission in its adoption of regulatory policies which are in the public interest and necessary for carrying out our mandate under the Communications Act. Our fundamental concern is the availability of services and equipment to the communications consumer and, to that end, creation of an environment wherein regulation does not artificially restrict the diversity of services or equipment available to the public. There is considerable uncertainty as to the limits of permissible Bell System activities under the decree. Because of the practical role this Commission plays in determining permissible activity under the decree through a classification scheme which distinguishes between regulated "communications" and unregulated data processing services, the decree has been an underlying source of contention in various proceedings, including this one. It is important for us to set forth our position as to the extent of permissible activity under the decree in order to make clear the effect of our decision. Accordingly, in the following paragraphs we will set forth a) the regulatory dilemma created by the 1956 consent decree as presently construed by DOJ; b) permissible activity under the decree, as evidenced in the actual practices of the Bell System and with DOJ's acquiescence, and c) the role of this Commission in determining permissible activity under the decree as it affects AT&T's provision of "enhanced non-voice" services and customer-premises equipment, given the industry structure we are proposing for the provision of such services and equipment.

136. Sections IV and V of the decree have particular relevance to this proceeding. Section V describes the permissible business activities of AT&T and all of its subsidiaries, except Western Electric and Western Electric's subsidiaries. Subject to seven exceptions Section V prohibits these companies from engaging in any business activity "other than the furnishing of common carrier communications services." The decree contains its own definition of "common carrier communications services." Section II (i) of the decree defines "common carrier communications services" as:

> * * * communications services and facilities, other than message telegram service, the charges for which are subject to public regulation under the Communications Act of 1934, or any amendment thereof, or would be subject to such regulation thereunder if such service or facility were furnished in interstate commerce; and shall also include any communications service or facility, other than message telegram service, the charges for which are or become subject to regulation under existing or future laws of any state, territory, or the District of Columbia, but only in the jurisdiction or jurisdictions in which the charges for such service or facility are subject to regulation.

One of the seven exemptions is stated in V (g), which exempts "business or services incidental to the furnishing by AT&T or such subsidiaries of common carrier communications services." Section IV of the decree describes the permissible business activities of Western Electric. Section IV (b) permits Western Electric to engage in any business "of a character or type engaged in by Western or its subsidiaries for companies of the Bell System * * *" The decree contains a separate provision with respect to manufacturing activities. Section IV (A) of the decree enjoins Western Electric and AT&T from manufacturing any kind of equipment for sale or lease "which is not of a type sold or leased or intended to be sold or leased to Companies of the Bell System for use in furnishing common carrier communications services, * * *" [111]

137. To place these restrictions into historical perspective, we note that the decree was issued in 1956 in order to settle a civil antitrust case which the Department of Justice had instituted in 1949. Thus its adoption was ten years before we initiated our *First Computer Inquiry*. It is implicit, therefore, that at that time there was no perceived distinction between unregulated "data processing" as opposed to regulated "communications" services provided over common carrier facilities. Yet the decree imposes restrictions which limit AT&T to the provision of common carrier communications services i.e. "* * * communications services and facilities, other than message telegram service, the charges for which are subject to public regulation under the Communications Act of 1934 * * *" In a static technological, economic and regulatory environment this definition would have allowed AT&T great flexibility. So long as all services rendered via common carrier facilities were communications services (as defined) and regulated there would be no conflict. However, fifteen years later, in 1971, the determination was made that there were non-communication offerings, such as "data processing" services, which could be offered over common carrier communication facilities free from the strictures of the Communications Act of 1934, as amended. When this dichotomy was established in the *First Computer Inquiry*, it was assumed that AT&T would be restricted to the offering of "communications" or "hybrid Communications" services because of the constraints imposed by the decree. As a result, our maximum separation rules specifically did not apply to companies of the Bell System on the assumption that if an offering of the Bell System constituted a data processing service the Bell System would be foreclosed from its provision by the terms of the decree, because the service would not be "subject to regulation."

138. The inherent deficiency of the *First Computer Inquiry* was implication that a clear and stable dichotomy could be established between regulated and unregulated services with the necessary computer processing applications provided through separate computer facilities. This belief was based on existing market applications of computer processing technology, which

[111] This prohibition is subject to several exceptions, including an exception for any equipment manufactured for the federal government.

were then limited to central host computers. Moreover, the definitional structure and maximum separation policy were adopted according to our perceptions at that time. However, microprocessor technology and large-scale integrating circuitry have since transformed the market applications of computer processing services and applications. The strict separation rules adopted in the *First Computer Inquiry* must yield to the forces of technology. Demand for and the appearance of new services have exposed the difficulties inherent in a regulatory scheme which forces such a complete separation.

139. While we intend to adopt a flexible regulatory scheme for this dynamic environment, we believe that the practical implications of current constructions of the 1956 consent decree may impede our efforts. Such is the case because of the attention focused on the ability or inability of AT&T to offer "enhanced non-voice" services and customer-premises equipment, rather than on the structure under which they are provided. From an analysis of the history of the decree, we are led to conclude that it is based on the assumption that AT&T possessed significant market power which should be confined to communications common carrier services and, once so confined, be regulated. One element in such an assumption may have been that AT&T would use its monopoly power to secure an unearned but advantageous position in any competitive market into which it might enter. A second assumption underlying the decree seems to be that the benefits to the public from containing the firm outweigh the costs in terms of foregone products and services available to the public. Consideration should be given to the continued validity of these assumptions, particularly to the implicit cost/benefit judgment, in light of the industry structure we are proposing.

140. As a practical matter we are currently faced with a dilemma. The Department of Justice has taken the position that "[i]n order to constitute a permissible activity under the judgment, the offering must be both a communications service or facility *and* be subject to public regulation."[112] This would mean that AT&T may provide only common carrier communications services "the charges for which are subject to regulation". That position requires that if the Commission believes the public interest is served by having AT&T provide a particular service or piece of equipment such an activity must be classified as "communications" and regulated irrespective of other market structure considerations. When faced with the dilemma of classifying a given activity as communications and regulating it or depriving the consumer of beneficial services, the incentive is to classify such activity as regulated communications so as not to deprive the consumer of the benefits of the service. However, this scenario has less than optimal implications from a regulatory perspective, primarily because the boundary between communications and data processing is perceived as jurisdictional. To the extent that an acitivity is classified as communications, the limits of permissible activity outside the scope of regulation is correspondingly narrowed. The net result is that regulation may be unnecessarily expanded to accommodate beneficial services of AT&T if a prerequisite to their provision is "regulation".

141. The potential distortion of the marketplace through the imposition of regulatory constraints where market realities do not require them must be eliminated if we are to evaluate accurately the relative merits of the various options (discussed *infra*) put forth for final decision. With the exception of the Bell System, these options would minimize the impact of any determination as to the communications or data processing nature of an offering by specifically providing for the integration of various processing operations.[113] Unless AT&T is allowed to offer on a non-regulated basis terminal equipment and enhanced non-voice processing applications which we find to be in the public interest, the current pressures to distort the regulatory boundary are not alleviated. Morever, if AT&T is foreclosed from offering unregulated services or equipment, we may not be in a position to exercise a given "deregulatory" option even if we conclude that the public would be better served by AT&T's participation. While we believe that a regulatory scheme should not be devised merely to accommodate the unique circumstances of AT&T, we must foster an environment conducive to the availability of diverse, high quality services and equipment to the public. In this context the research and development capacity of the Bell System and its ability to come forth with new and innovative services cannot be simply discarded. The question arises, therefore whether AT&T can market enhanced non-voice services and customer premises equipment on a non-regulated basis, where the Commission believes such offerings would be in the public interest.

142. Rather than being guided by the interpretations of the decree advanced by DOJ or AT&T (which may reflect their own limited interests),[114] we believe that current activities of the Bell System may provide a more accurate guideline. In the area of customer-premises equipment for example, the Bell System is currently able to manufacture and market a wide range of terminal equipment through Western Electric. Section IV(B) of the decree seems to permit Western Electric to sell or lease any type of equipment to the general public which it sells or leases to Bell System companies either for service to others or for their own use. The Bell System companies are likely to utilize a wide variety of devices for their internal communications and processing requirements. Thus, the consent decree may not create any barrier to the marketing through Western Electric of customer-premises equipment which combines communications and information processing functions. A literal reading of Section IV(A) would permit Western Electric to manufacture any kind of equipment used by Bell System companies in conducting business operations which the decree classifies as "common carrier communications services." The decree provides no guidance as to what types of "use" might be considered relevant to the furnishing of common carrier communications services.[115] Moreover it is clear that equipment manufactured by Western Electric need not be offered on a tariffed basis. In point of fact, Teletype Corporation, a wholly-owned subsidiary of Western Electric, directly markets and sells equipment manufactured by Western Electric on a non-regulated basis the charges for which are in no way subject to public regulation. Thus, its present conduct indicates that AT&T

[112] Letter dated September 2, 1976 from Jonathan C. Rose, Deputy Assistant Attorney General, Antitrust Division, addressed to Joseph A. Marino, Deputy Chief, Common Carrier Bureau, concerning the offering by AT&T of its Dataspeed 40/4 terminal.

[113] Even if a definitional scheme is adopted, and "enhanced non-voice" data processing service could be offered by a carrier without subjecting the service to Title II regulation. Therefore, this Commission would not be foreclosing or artificially structuring services. Instead any determination as to the "communications" or "data processing" nature of a service would merely affect the degree of regulation, if any, over the offering.

[114] DOJ currently has pending an antitrust suit against AT&T. United States v. American Telephone and Telegraph, C.A. No. 74-1698, (D.C., 1974).

[115] For example, the Bell System surely must "use" a wide range of terminal equipment including basic telephone instruments, data terminals, and even computers in furnishing common carrier services, even if it provided none of these types of equipment for customer use.

can market terminal equipment on an unregulated basis through Teletype Corporation without being in violation of the consent decree. Accordingly, we believe that any determination to exclude customer-premises equipment from tariff-type regulation would not foreclose AT&T's continued participation in this market through Teletype Corporation.[116]

143. Western Electric has also begun marketing numerous computer software programs developed by the Bell System for its own internal use.[117] AT&T has taken the position that it is entirely appropriate for the Bell System to make such programs available to commercial entities at reasonable fees and that this in no way contravenes any provision of the 1956 consent decree. There does not appear to be any limitation on the types of "in house" programs that the Bell System may develop under this scenario, and correspondingly there does not appear to be any limitation on the marketing of such programs by Western Electric.[118] In this regard it must be kept in mind that the information processing requirements inherent in controlling the operations and needs of the Bell System are more or less comparable to the information processing requirements of other large corporations or institutions. Any computer software programs developed by the Bell System for its "own use" will undoubtedly have applications for a broad sector of users. Accordingly, we could conclude that the Bell System now is in the computer software business. Yet, the marketing of these computer software programs is in no way presently subject to regulation. Course of conduct indicates, therefore, that AT&T is able to market computer software programs outside the scope of a tariffed communications service and free from any degree of public regulation without violating the consent decree.

144. With respect to network services actual AT&T practices in the marketplace are less obvious insofar as its ability to offer services on a non-regulated basis. There are instances, however, where AT&T provides specialized services on a contractual basis outside the scope of tariff type regulation. For example, if a large corporate user desires specialized billing procedures to track communications costs by individual telephones, departments, divisions, or whatever, AT&T will provide this service on a contractual basis. These charges are not now subject to regulation. In certain respects these specialized billing services are analogous to other computer based services tailored to individual user needs. There may be instances of other services provided on a contractual basis, but the point to be made is that we do not believe we should be bound by DOJ's construction of the decree in ruling on future AT&T service offerings. DOJ's construction of the decree does not comport with actual practices of the Bell System which negate "regulation" as a prerequisite for permissible activity under the decree.[119]

145. We belive that the terms of the decree contain sufficient flexibility to allow both significant deregulation of terminal equipment and enhanced non-voice services yet continued participation—with appropriate structural safeguards—by AT&T in these markets. Moreover, we believe the time has come to focus on the exception in Section V(g) of the decree which exempts from its constraints "businesses or services incidental to the furnishing by AT&T or such subsidiaries of common carrier communications services".[120]

146. Throughout this proceeding we have recognized the confluence of technologies and the convergence of various computer processing applications—whether they be denoted as "communications" or "data processing". It is precisely this convergence which compells that a strict dichotomy must fall of its own weight. The rationale for separating out "enhanced non-voice" services is predicated on the belief that regulation should not compel any artificial structuring of services where the public interest requires otherwise. This is merely a recognition of the practical realities associated with advancements in computer processing applications. Moreover, it can hardly be argued that a contrary result was intended under the decree, since the major advancements in microprocessor and LSI technology which make these processing applications possible on a broad basis have come about only within the last ten years.[121] Likewise, in the terminal equipment area we have specifically rejected the notion of classifying devices as either communications or data processing. Yet, it would by no means be accurate to say that such equipment could not be used in conjunction with or to enhance the utility of a communications service. We specifically recognize that many terminal devices with computer processing applications can be used in both regulated and unregulated services depending on the use to which they are put by the customer.

147. In those cases where controversy exists, we believe that this Commission should decide whether the offering of customer-premises equipment or an "enhanced non-voice" service is "incidental" to the provision of a communications service under Section V(g) for the purpose of establishing permissible activity under the decree. See 47 U.S.C. 153(a) & (b). Accordingly, where market forces promise to be adequate and where full regulation is

[116] The Dataspeed 40/4, for example, is currently offered on a tariffed basis in conjuction with AT&T interstate private line service (FCC Tariff No. 260). At the same time it is offered on a non-regulated basis through Teletype Corp. There is no connection whatsoever between the tariffed offering and Teletype's offering with respect to either the price or conditions attached to the respective offerings. Tariffing can not be perceived as in any way controlling the manner in which such equipment is offered by Teletype, nor can it can be viewed as an indicium of reasonable conduct by Teletype Corp. Moreover, from what we can discern, it is AT&T's position that Teletype Corp. can market equipment which is "of a type" (under Section IV(A) of the decree) Western Electruc manufacturers for the Bell System and that such equipment need not be "identical" to equipment offered under tariff.

[117] Some of these programs have broad information processing applications as is evident, for example, in the UNIX and MAGIC programs.

[118] We note that CCIA has petitioned the Department of Justice to investigate Western Electric's offering of such computer programs as a violation of the consent decree. It has been almost a year since CCIA's petition, and DOJ has not taken any steps against the practice.

[119] We also note that AT&T entered into substantial contracts with the Government of Iran to assist in building a communications network. This endeavor too was not subject to regulatory scrutiny, at least by this Commission.

[120] In the Dataspeed 40/4 letter, footnote 118, *supra*. DOJ takes the position that:

Section V(g) of the judgment does permit AT&T to engage in businesses or services "incidental to the furnishing . . . of common carrier communications services," as your letter points out. It is the opinion of the Department of Justice, however, that this provision cannot legitimately be read as enabling the Bell System to offer data processing services and equipment to the public merely because the relevant device can be attached to telephone company facilities. The several provisions contained in Section V of the decree are clearly in the nature of saving provisions intended to permit the defendants in that case to continue to engage in a variety of miscellaneous services and activities, necessary and appropriate to the internal management and operation of their primary business. To read a savings provision as essentially vitiating substantive provisions of the decree, in our opinion, would be plainly inconsistent with the purposes of those substantive provisions, which was to limit the defendants to offering communications services subject to public regulations.

Compare this with the Department's letter of December 4, 1970 to the Chief of the Common Carrier Bureau, where the Department stated that AT&T's leasing of pole attachment space to cable operators was permissible under the "incidental" to communications clause of the decree.

[121] Similarly it can hardly be argued that it was intended that the nature and degree of regulation prevalent in 1956 should continue *ad infinition*. This Commission has always had the discretion to vary the nature and degree of regulation imposed over a carrier.

therefore not required, but the offering by AT&T of a particular processing activity associated with the provision of an "enhanced non-voice" service would be in the public interest, it is our intent to resolve our public interest determinations based on the assumption that such activity would fall within Section V(g) of the decree and would therefore constitute permissible activity. Such an approach would likewise be applicable to the provision of customer-premises equipment offered by AT&T. In this way we will be able to resolve the dilemma caused by the decree insofar as it may foster unnecessary regulation at the risk of foreclosing equipment and service options to the consumer. Just as DOJ has deferred to the expertise of this Commission in determining what constitutes "communications" as opposed to "data processing" for purposes of determining permissible activity under the decree, we believe that the changes in the market place since 1956 dictate that similar deference be accorded our determinations affecting whether these activities are "incidental" to communications insofar as the public interest requires the provision of such services or equipment. While we seek comment in this regard, absent substantial arguments to the contrary it is our intent to pursue this course of action.

148. We recognize that the court with jurisdiction over the decree is the proper body to render any definitive construction of the decree. Absent a definitive construction, the approach detailed here seems reasonable and consistent with current Bell System practices. If DOJ defers to this agency's determination relative to Section V(g) of the decree for the limited purpose of addressing the issues raised in this proceeding, modification of the decree would not be necessary. In any event we seek comments on the need for modification of the decree.

IV. Further Notice of Inquiry and Rulemaking

A. Introduction

149. The foregoing establishes a structure under which "enhanced non-voice" services may be provided while minimizing the regulatory impact on carriers with respect to any distinction between communications and a data processing service. At the same time the structure isolates the providers of voice and underlying transmission services from entities which acquire the basic transmission service pursuant to tariff and add computer processing applications to render a myriad of different services. We believe that this structure is conducive to the provision of "enhanced non-voice" services on a competitive basis. Yet, competition for the sake of competition is not the motivating force in establishing this structure. The structure flows from a recognition that computer processing technology has substantial benefits for communications users and the desire to minimize regulatory obstacles to the full development of its market applications, and not soley from a concerted effort to force competition *per se* into the telecommunications market. It so happens that the potential for a competitive environment to evolve is very real, and such a possibility should be viewed as a positive contribution and its implications explored further.

150. It is because the resale structure set forth in the Tentative Decision offers this potential that we seek to inquire into other options that might be available to this Commission in reaching a final decision. We are compelled to inquire further as to whether the public interest requires a regulatory scheme other than the one set forth in the Tentative Decision. We have reached the conclusions in the Tentative Decision and the resale structure which forms its underpinning based on the record to date in this proceeding. While we believe it is a viable solution, we do not propose it as an ideal solution to all the problems raised in this proceeding. In the real world few regulatory decisions are viewed as "ideal" to all concerned. We believe that both the conclusion and rationale for mandating the provision of "enhanced non-voice" services on a resale basis is sound and should constitute the fundamental premise upon which any final determination in this area is built. However, this decision does bring into focus other pertinent questions. Accordingly, in this section we intend to: a) Identify the regulatory implicaitons or burdens which this Commission must be willing to accept if the Tentative Decision is adopted as a final decision in this proceeding. b) state how these regualtory considerations could be alleviated, c) set forth various options to be considered in reaching a final decision and, d) seek identification and comment on the public interest considerations relevant to the various options put forth.

B. Regulatory Implications of the Tentative Decision

Network Services

151. Under the Tentative Decision the need to distinguish between a regulated communications service and an unregulated data processing service is not eliminated. While any distinction between a communications service and a data processing service is confined to the resale level, the Commission must still distinguish those processing services which are to be offered on a tariffed basis and those services which need not be tariffed. To the extent that such a determination must be made there remains some degree of uncertainty as to the exact boundary line beyond which regulation ceases. The determination as to whether a resale entity is to be regulated as a carrier under Title II of the Act is in part dependent upon whether or not the entity is providing a communications service. If the resale entity is providing a data processing service, the Resale Decision is not applicable and the provider of such a service is not regulated as communication common carrier under Title II of the Act. Thus a critical regulatory distinction is whether a resale entity is providing a communications or a data processing service.[122] The Tentative Decision requires the Commission to decide whether a resale entity in offering an "enhanced non-voice" service is providing a communications or a data processing service on an *ad hoc* basis. To the extent there is regulatory uncertainly as to the dviding line between communications and data processing services, there is correspondingly uncertainty as to the regulated or non-regulated status of such a resale entity as a communication common carrier.

152. In addition to not providing certainty as to the precise limits of permissible carrier processing, the Tentative Decision may also contain indirect market and regulatory implications for unregulated entities providing "hybrid data processing services" under our current rules. We emphasize that our sphere of concern is not the evolution of markets for data processing services. Accordingly, the focus of this proceeding has been directed to the computer processing applications of communications common carriers. However, we do have a legitimate concern when unregulated

[122] On reconsideration of the *Report and Order* in the *Resale Decision* we stated:

Thus, if what is ultimately offered to the public is data processing or anything other than "communications", this proceeding is not applicable to such activity. The question as to what is "data processing" or "communications" is at issue in Docket No. 20823. This proceeding is not concerned with the definitions of those terms and we assume herein that our jurisdiction attaches only to the activities which are found to be "communications." 62 FCC 2d at 600.

data processing entities encroach into the telecommunications arena and provide the functional equivalent of what has traditionally been considered a common carrier communications service. Our concern in this regard becomes increasingly relevant as the technologies and services rendered with communications and data processing applications continue to converge. We recognize that any action on our part with respect to the scope of permissible common carrier processing activity may be perceived as either narrowing or expanding the parameters of unregulated activity. In this regard we note that the Tentative Decision establishes the basic resale structure for "enhanced non-voice" services and is overlayed by a definitional structure to distinguish those enhanced non-voice communications services which must be offered on a tariffed basis. This, combined with the fact that the resale entity could offer both communications and data processing services, has certain marketplace implications in and of itself for the unregulated sector. The resale carrier would be able to offer any "enhanced non-voice" service; however, the unregulated data processing entity would be limited to providing solely an enhanced non-voice data processing service. Obviously, the communications common carrier would have tremendous flexibility to provide new and innovative services and to custom tailor these services to individualized user needs, much more so than a currently unregulated entity. One result may be an indirect forcing of currently unregulated entities to acquire common carrier status in order to obtain the same degree of flexibility afforded a resale common carrier. Whether or not there is sufficient incentive for an unregulated entity to seek common carrier status may well depend on the nature and degree of regulation to which resale carriers would be subject. However, irrespective of the degree of regulation, the Tentative Decision may have the result of forcing unregulated data processing entities to obtain common carrier status as the confluence of technologies continues to evolve.

153. The Tentative Decision also raises questions as to the need for any regulation over the "enhanced non-voice" services of resale entities. While the Tentative Decision does not propose to establish the nature or degree of regulation to be exercised over these services of resale carriers, it is implicit that some form of regulation is involved. Yet, under the resale structure the reasonableness of access, charges and carrier practices with respect to the basic transmission facilities would be scrutinized in reviewing the tariffs of the underlying carrier. In a competitive enhanced non-voice market the costs of the underlying carrier's transmission facilities may not be a factor in determining the reasonableness of the resale entities charges, since the underlying carrier would be required to make facilities available to all on a non-discriminatory basis. Thus, rate regulation would focus on the allocation of various non-transmission costs between the regulated enhanced non-voiced communications and enhanced non-voice data processing services of the resale entity. As the Tentative Decision points out, under the resale structure the difference between a regulated and unregulated service in this market is to a large extent a factor of equipment design and software applications. The question arises, therefore, as to whether there are significant public interest considerations which dictate the regulation of these and other non-transmission costs. If the potential for cross-subsidization is minimal or non-existent and sufficient safeguards are established to protect against other anti-competitive behavior normally addressed under tariff type regulation, it may be more appropriate to rely on marketplace forces as an indirect means of controlling the activities of the resale entity in this area.

154. Moreover, we have already indicated that one benefit flowing from the resale structure is the greater potential for these service markets to develop on a competitive basis. Should a competitive market evolve as is envisioned for enhanced non-voice services the argument is made that the FCC will be called upon to referee the competitive rivalry among regulated firms. It is argued that the FCC will be required to determine: (1) whether particular services are within the scope of authority of a regulated carrier,[123] and (2) whether the rate charged for a particular service by a carrier constitutes a predatory practice when considered in relation to the prices of its regulated competitors. The contention is made that this is attributable to the pressure exerted on a regulatory agency to allocate business among various participants in the regulated competitive sector, facilitating the survival of as many firms as possible, but at a high price in terms of efficiency and progress.[124] In addition, the argument has been made that regulatory requirements to file tariffs and to obtain prior approval of facilities can restrict competitive activity. Thus it is argued that the potential exists for regulatory responses to these two types of concerns to foster inefficiencies and misallocations of resources in the telecommunications market.

155. In addition, arguments are generally advanced that regulation should be limited to monopoly markets and that the need for regulation does not exist where competition is workable. While we foresee the enhanced non-voice services market as competitive, under the structure set forth, the evolution and eventual structure of this market is unclear at this time. The potential exists for a multiplicity of entrants to serve the needs of both small and large users. We are concerned that potential barriers to entry may result either from a scheme of regulation or a scheme of non-regulation in the "enhanced non-voice" services market. Some degree of balancing may be involved. On the one hand a scheme of minimal regulation could be developed for carriers participating in this market. We must, however, compare the public interest benefits or detriments to be incurred in a scheme of total non-regulation as contrasted with a scheme of minimal regulation. The Tentative Decision affords us the flexibility to examine the public interest considerations relevant to ascertaining the nature and degree of regulation which should be exercised over the enhanced non-voice services of resale carriers. The Tentative Decision proposes some degree of regulation. Whether such a result is in the public interest when all factors are considered should be weighed in reaching a final decision.

156. In terms of the resale structure and our maximum separation policy, the Tentative Decision also modifies what is currently a strict separation between the regulated activities of a carrier and its unregulated ventures in the data processing market. Under the resale structure the concerns raised by the Commission in the *First Computer Inquiry* are addressed; yet, the maximum separation policy is modified to allow a resale carrier to engage in both regulated and unregulated activities related to the transmission and processing of information. Moreover, the Tentative Decision maintains the current exclusion from the

[123] With the possible exception of AT&T this argument would not be relevant under the resale structure since we do not intend to impose any limitations on the type of enhanced non-voice services that may be offered by a resale entity. The practical consequences may be different with respect to AT&T because of the constraints imposed on it by the terms of the 1956 consent decree.

[124] See, Appendix to reply comments of IBM.

maximum separation requirements for those carriers with gross annual revenues under $1 million. Beyond these two levels the Tentative Decision does not address the extent to which the maximum separation rules should be modified for carriers other than resale carriers. This is not to say, however, that the implications of limiting the applicability of the resale structure should not be examined as part of the comments sought on the Tentative Decision. The telecommunication market may be such that the need does not exist to apply the resale structure to every underlying carrier providing a transmission medium. The maximum separation policy was adopted to provide some degree of protection against a carrier utilizing its market power to engage in cross-subsidization and anti-competitive behavior to the detriment of the communications ratepayer. With the recent introduction of competition into selected segments of the telecommunications market, the need may not exist to subject new carriers to the rigidities of the resale structure if such entities lack the inherent potential to cross-subsidize or to engage in anti-competitive conduct to the detriment of the communications ratepayer.

157. It also appears relevant to consider the appropriate structure to be applied to the International Record Carriers (IRCs). While the Tentative Decision sets forth a policy applicable only to domestic arena, there may be public benefits in extending this policy determination to the IRCs. In limiting the Tentative Decision it does not mean that the international carriers may not voluntarily provide for reselling. Nor does it mean that there may be no demand internationally for "enhanced non-voice" services. On the contrary, we believe that there may develop a substantial demand for such services. Nonetheless, in view of the current status of resale on an international basis, our Tentative Decision does not require the extension of the resale structure to the international arena. We are concerned, however, that such a bifurcated approach may, over the long term, create problems with respect to the possible expansion of "enhanced non-voice" services internationally, particularly on a competitive basis. Whether or not extension of the resale structure to the IRCs is required should be considered in reaching a final and comprehensive solution to the issues raised in this proceeding. Accordingly, in addition to seeking comment on the above matters we solicit comment on whether we should expand our Tentative Decision to include international services, and whether a bifurcated policy will inhibit the offering of new enhanced non-voice services by existing carriers or new competitive carriers.

Terminal Equipment

158. In its treatment of terminal equipment, the Tentative Decision requires making a distinction between customer-premises equipment which performs a basic media conversion function and that which performs additional functions. While this approach addresses the issues raised by the incorporation of distributed processing applications into devices located on the customer's premises, it also imposes the need for regulatory determinations which would not otherwise be the case if all terminal equipment were handled in the same fashion. The regulatory burdens associated with making the determination as to whether a given piece of customer-premises equipment functions as more than a basic media conversion device may be minimal. It may well be that after the first such determination the need for additional determinations would be minimal. However, we believe that technology permits, and users will demand in the future substantial increases in the supply of equipment capable of more than just basic media conversion.

159. Following decisions by this Commission, the terminal equipment market is characterized by an increasing amount of new and potential competition. New and innovative types of customer-premises equipment are persistently being introduced into the marketplace by regulated and non-regulated entities. There are multiple providers of such equipment and it is very unlikely that a single supplier could meet the varied terminal needs of all users. A need may no longer exist for customer-premises equipment to be subject to traditional monopoly tariff regulation. The terminal equipment market has changed dramatically since the 1934 Act was adopted, in terms of consumer requirements, suppliers of such equipment, and the nature of the equipment itself. As a result of our registration program, consumers are now able to connect their own equipment to the network if that equipment conforms to certain technical standards and is properly registered with the Commission. The question becomes whether it would be more advantageous to the consumer for all customer-premises equipment to be provided solely on a non-tariffed basis, rather than the present situation where some equipment is offered both on a tariffed basis as part and parcel of a common carrier communications offering and on a non-tariffed basis by unregulated entities.

160. In certain instances a carrier's charges for terminal equipment are incorporated into the overall price of the communications service. Because the Tentative Decision attempts to isolate the facilities and costs of the carrier's underlying transmission service, better identification of costs attributable to the underlying transmission service would be further facilitated if all customer-premises equipment are unbundled from the communications service and provided on a separate basis.[125] Moreover, because over time the Tentative Decision would result in more and more equipment being offered on an unbundled basis and provided through an entity separate from that of the underlying carrier, it may be appropriate to determine whether any regulatory distinction should be made between basic media conversion devices and devices which perform additional functions. However, past *Notices* in this proceeding do not address a carrier's provision of simple transducing devices, such as the basic telephone. This is reflected in our treatment of customer-premises equipment in the Tentative Decision. In weighing the relative merit of the Tentative Decision consideration should be given to whether uniform treatment should be accorded all customer-premises equipment regardless of functional capabilities, and whether deregulated equipment should be provided under the structure as proposed.

C. Alternative Means of Addressing the Regulatory Implications of the Tentative Decision

161. We recognize that the application of various proposals set forth in the Tentative Decision may require more regulation than necessary. However, some of the regulatory implications or burdens could be alleviated under different variations of the Tentative Decision which have as their premise the resale structure as proposed. For example, while the Tentative Decision requires distinction between a communications service and an unregulated data processing service, this distinction could be completely eliminated if there were no regulation over the "enhanced non-voice" services

[125] Acquisition and availability of such equipment should be only a minor concern. Even the basic telephone is readily available at a local department store, catalogue center, or various other stores handling general electronic equipment.

of resale entities. There would be no need to distinguish the regulated or non-regulated status of such services since they would not be subject to regulation. Thus the result of excluding these services from Title II jurisdiction is the elimination of any need to draw a boundary between the tariffable nature of various types of "enhanced non-voice" services, i.e., whether a given service constitutes a communications or a data processing service. This assumes, of course, a consistent application to all carriers where such a distinction is required, including the IRCs, if the communications/data processing distinction is to be completely eliminated. One obvious benefit in this approach is that it would remove uncertainty as to the regulatory boundary between regulated and unregulated activity. Clarity would prevail in what has traditionally been viewed as a regulatory grey area. At the same time the need for justification for regulation in this competitive environment would be determined. The restraints of traditional common carrier regulation would be eliminated. Likewise uniformity and regulatory certainty would result in the terminal equipment area if all customer-premises equipment were to be unbundled from the underlying carrier's transmission services and provided through a separte entity.

162. These variations could be accommodated under the resale structure set forth in the Tentative Decision. Having reached a Tentative Decision based on the record before us, we believe that before reaching a final decision consideration should be given to different alternatives that might be avaiable to the Commission which use as a foundation this resale structure. It is clear that greater regulatory certainty would result under the above alternatives with respect to both network services and customer-premises equipment. While various comments filed in this proceeding suggest these variations in one form or another as possible alternatives to consider in this proceeding, there is no record before us which adequately addresses the public interest considerations relative to weighing the advantages or disadvantages of a given alternative based on the resale structure.

163. There is another alternative which may be viewed as a further variation of the Tentative Decision and what has been proposed above. Various authorities, including expert engineers and expert marketing authorities maintain that "hybrid" communications and data processing activities cannot be effectively differentiated. As underlying technologies continue to advance, their technical distinctions become increasingly blurred. From a marketing viewpoint customers may generally perceive communications and data processing to be functionally components of the same product or service. We recognize these technological and marketing factors in the structure we have proposed by eliminating any restrictions on the type of "enhanced non-voice services" that a resale carrier may provide. As we have indicated, however, this structure only addresses the services of a carrier and does not specifically address the dilemma of a currently unregualted entity being confined to the offering of unregulated data processing services. From the perspective of the unregulated sector our efforts still may be viewed as attempts to create "black and white" mutually exclusive service areas. Accordingly, another approach might be to create an "overlapping area" in which we do not, as a governmental body, try to define whether the services are "communications" and regulated under the Act, or whether they are "data processing" and therefore unregulated. Recognition could be given to a "gray area" in which both forms would co-exist. For example, a carrier could offer a particular "enhanced non-voice service" and file tariffs with us in accordance with our normal procedures, while other firms could offer an identical service outside the umbrella of Title II regulation. In essence, the choice of which way to particpate in the "gray area" would be left up to the provider of the service.

164. Assuming the Commission has the legal authority to adopt and implement a given policy solution to these issues, we belive that a record should be established which adequately considers all the public interest ramifications of a given alternative as it relates to the future development of the telelcommunication industry. In this manner we will be in a position to reach a final decision weighing all the relevant public interest considerations, and come to a decision based on the relative merits of the various alternatives.

D. Options in Reaching a Final Decision

165. In setting forth alternatives to the Tentative Decision our intent is to identify various other avenues which sould be considered and addressed by this Commission before reaching a final decision in this matter. This will provide a frame of reference by which commenting parties may address the relevant public interest considerations. The options set forth below, in essence, constitute variations of the resale structure established in the Tentative Decision. The differences between the various options revolve around the nature and extent of regulation, if any, to be applied to "enhanced non-voice" services, the application of the resale structure to selected underlying carriers, and the "deregulation" of customer-premises equipment. We wish to make it clear, however, that our intent is to maintain the the resale structure of the Tentative Decision as the common link between the vaious options and as the foundation for our final decision. Accordingly, we conclude that the following options should be considered before reaching a final decision:

(1) Adoption of the Tentaive Decision as currently proposed;

(2) Adoption of the resale structure of the Tentative Decision; however, a) extend the resale structure to the IRCs, and/or b) limit the application of the resale structure to those underlying carriers having the potential to engage in cross-subsidization or other anti-competitive behavior;

(3) Adoption of the resale structure of the Tentative Decision; however, exclude from Title II jurisdiction "enhanced non-voice" services;

(4) Adoption of the resale structure of the Tantive Decision with enhanced non-voice services excluded from Title II regulation (same as #3); however, a) extend the resale structure to the IRCs, and/or b) limit the application of the resale structure to those underlying carriers having the potential to engage in cross-subsidization or other anti-competitive behavior; [126]

(5) Adoption of a regulatory scheme giving specific recognition to a regulatory "gray area" under which the provider of an "enhanced non-voice" service would decide the communications or data processing nature of the service.

(6) Adoption of any of the above options joined with deregulation of either a) devices which perform more than a basic media conversion function, or b) all customer-premises equipment, and restrict any carriers to which the resale structure applies to the provision of deregulated equipment under the

[126] Under option #1 we would have the discretion to waive the resale structure for a given carrier upon a proper showing that the public interest would be better served by grant of such a waiver of the Commission's Rules. Option #2 and #4 suggests the possibility of excluding at the outset certain carriers from the resale structure, as opposed to subsequent *ad hoc* determination.

separate subsidiary structure set forth in the Tentative Decision.[127]

166. In setting forth these options we are attempting to build a record to support a final decision which will best fulfill the purposes of this Commission as set forth in Section 1 of the Communications Act, "i.e., . . . to make available . . . to all the people of the United States a rapid, efficient, Nation-wide, and world-wide wire and radio communication service with adequate facilities at reasonable charges . . ." 47 U.S.C. § 151. In reviewing the comments filed in response to the options above, we shall consider the costs and benefits of each option from the perspective of the overall purpose of this Commission in the context of the rapid technological and market developments affecting communications and related industries. Thus, we shall consider the confluence of technologies, the ever increasing dependence upon common carrier transmission facilities in the movement of information, and the need to tailor services to individual user requirements.

E. Items of Inquiry

167. In addressing the issues raised in this proceeding specific comments are sought on:

(a) The public interest considerations (legal, market, economic, etc.) relevant to the assertion or forbearance of Title II jurisdiction over "enhanced non-voice" services and whether the resale structure should be applied to all carriers owning or controlling (as in the case of the IRC's) underlying transmission facilities;

(b) The extent to which the public interest considerations in (a) above directly relate to advancements in technology and the continuing evolution of computer processing market applications;

(c) The safeguards, if any, which should be established in the event there is no regulation over the activities of resale entities with respect to the provision of either "enhanced non-voice" services or customer-premises equipment;

(d) Whether it would be in the public interest to allow AT&T or any other monopoly based carrier to provide enhanced non-voice services or customer-premises equipment on a non-regulated basis under the resale structure set forth in the Tentative Decision; and

(e) Whether technological and market changes combined with the resale structure necessitate a modification of the 1956 AT&T consent decree in the event AT&T is barred from providing any "enhanced non-voice" service or customer-premises equipment which this Commission finds to be "incidental" to the provision of a common carrier communications service under Section V(g) of the decree.[128]

168. A primary goal in this proceeding is to set forth a structure under which new and innovative competitive services and equipment can be provided free from constraints that regulation may impose on the use of technology. More important, because of the significant role combined communication/data processing services will play in the economic and social development of our Nation, is the need to establish a sound and consistent policy on which the industry can rely. Because of the potential significance of this proceeding with respect to the future development of the telecommunicaitons industry we ask commenting parties to give each of the options careful and deliberate consideration. We would hope that participants would weigh the relative merits of the above options from a perspective which goes beyond their own parochial interests. Moreover, it should be made clear that, while by our action today we are adopting a Tentative Decision, our minds remain open as to the final disposition of this matter.

V. Conclusion

169. In the *Notices* comments were sought on the need for, or desirability of, more definitive legislation in dealing with the regulatory issues raised by the confluence of data processing and communicaitons. Most of the comments addressing this issue conclude that there is no need for legislative intervention in dealing with the convergence of data processing and communications. At the same time, however, certain parties believe that the Commission should have discretion to forbear from imposing regualtion in those instances where the public interest does not require it. Suggestions are made that legislation should be sought which would afford the Commission discretion as to the exercise of its jurisdiction, either to forebear from asserting jurisdiction or to vary the quantity of regulation, should the Commission believe that it does not have such authority.

170. In reaching a final decision in this matter, we must consider both our authority to adopt a given proposal and the relevant public interest considerations. We believe that adoption of the Tentative Decision is within our statutory authority. However, we are not at this time taking a position as to our authority to adopt any of the variations of the Tentative Decision which we have set forth as options to be considered in reaching a final decision. Because of the significance of the issues raised in this proceeding, we do not believe that a determination as to the relative merits of the various options should be clouded by legal constraints that the Act and/or the Consent Decree may impose. We are aware of the legal complexities involved in adopting any given option, but they should not prevent us from considering alternatives which are consonant with our statutory purpose as set forth in Section 1 of the Communications Act. If this Commission concludes that a particular course of action is clearly required in the public interest, but the authority to adopt such a course of action is lacking, our position will be made known to Congress and appropriate legislative recourse will be sought. We do not wish to see the public interest considerations dwarfed by legal entanglements; our primary interest is to ascertain first what course of action is required in the public interest.[129] We also intend to initiate a competitive carrier proceeding which would look at the nature and degree of regulation to be exercised over common carriers subject to effective competition. To the extent that any portion of the record developed in that proceeding is of benefit in reaching a final decision here, we intend to incorporate that record as part of this proceeding. Any part of the record of that proceeding which is relied upon in reaching a determination here will be so noted in our final decision.

171. A final item to be addressed is the motion filed by CBEMA to treat this decision as a recommended decision by the Chief, Common Carrier Bureau and to allow for additional comments and

[127] Petitioners in RM-3308 have requested the Commission to establish the terms and conditions, if any, under which communications common carriers, including connecting carriers subject to FCC jurisdiction, may engage directly in the unregulated sale of terminal equipment and systems connected to the nationwide telecommunications network. Because a final decision in this matter has the potential for rendering moot this petition, we are holding action on RM-3308 in abeyance pending a final decision in this proceeding.

[128] We call to the commenting parties' attention a statement entered into the record in this proceeding which summarizes an October 20, 1978 meeting between DOJ and the Commission. We seek comments on the economic concerns raised therein by DOJ, specifically that portion of the statement which reads:I28*ERR14*DOJ noted that any analysis of the decree must be done as part of a "larger" picture. It indicated that the FCC should clearly set forth its policy as to what it wants to accomplish and how it would be done. In so doing, it stated that the FCC should specifically address why it believes it is not in the public interest for the 1956 consent decree to remain as is. Moreover, DOJ indicated its interest in knowing what practices, if any, exist which suggest that the economic theory underlying the consent decree is no longer applicable. DOJ emphasized that the FCC should focus on the economic realities of removing or modifying the consent decree.

[129] If in reaching a final decision in this matter we should reach a result which is not consistent with the rules set forth in Appendix B, we shall adopt new rules within the parameters set forth by this document.

possibly oral argument before the Commission. CBEMA submits that the procedure of a Recommended Decision followed by written briefs or comments and oral argument on issues tentatively reched prior to the rendering of a final decision is particularly desirable when complex and comprehensive issues of enormous marketplace significance are involved. Because our determination is being issued in the form of a Tentative Decision, with opportunity for further comment, the essence of CBEMA's motion is granted. However, we believe that oral argument of the issues raised in this proceeding would be premature at this time. After review of our decision, and the comments filed in response, CBEMA may renew its request for oral argument should it so desire.

172. Accordingly, it is ordered, pursuant to Sections 4(i), 4(j), 201–205, 403, and 404 of the Communications Act of 1934, that the policies and rules set forth in Section III of this document are adopted as a Tentative Decision in Docket No. 20828. In accordance with Section IV of this document a further Notice of Inquiry and Rulemaking is hereby commenced. Interested persons may file comments on both aspects on or before August 30, 1979 and reply comments on or before October 1, 1979. All relevant and timely comments filed in accordance with §§ 1.415 and 1.419 of our Rules and Regulations will be considered by the Commission before final action is taken in this proceeding. In reaching its decision, the Commission may take into consideration information and ideas not contained in the comments, provided that such information or a writing indicating the nature and source of such information is placed in the public file, and provided that the fact of the Commission's reliance on such information is noted in its final decision.

173. It is further ordered that this proceeding shall be subject to further order by the Commission.

174. It is further ordered that the Secretary shall cause a copy of this decision to be published in the Federal Register.

Federal Communications Commission.*

William J. Tricarico,

Secretary.

Appendix A—Comments*

Communications Industry

American Cable and Radio Corporation (AC&R).
American Satellite Corporation (ASC).
American Telephone and Telegraph Company (AT&T).
Communications Satellite Corporation (COMSAT).
COMSAT General Corporation (COMSAT General).
GTE Service Corporation and its Affiliated Domestic Operating Companies (GTE).
MCI Telecommunications Corporation, Microwave Communications, Inc. and N-Triple-C Inc. (Collectively referred to as MCI).
National Cable Television Association, Inc. (NCTA).
RCA Global Communications (RCAG).
Rochester Telephone Corporation (Rochester Telephone).
Satellite Business System (SBS).
Southern Pacific Communications Company (SPC).
Telenet Communications Corporation (TELENET).
United States Independent Telephone Association (USITA).
United Systems Service, Inc. (USS).
Western Union Telegraph Company (WUT).

Data Processing Industry and Equipment Manufactures

Ad Hoc Committee on Docket 20828, Communications Division, Electronic Industries Association (EIA).
Boeing Computer Services, Inc. (BOEING).
Bunker Ramo Corporation (BUNKER RAMO).
Computer and Business Equipment Manufacturers Association (CBEMA).
Computer and Communications Industry Association (CCIA).
Control Data Corporation (CONTROL DATA).
Incoterm Corporation (INCOTERM).
Independent Data Communications Manufacturers Association, Inc. (IDCMA).
International Business Machines Corporation (IBM).
McDonnell Douglas Automation Company (MCAUTO).
National Burglar and Fire Alarm Association (NBFAA).
Remote Processing Services Section of the Association of Data Processing Service Organizations (ADAPSO).
Scientific Time Sharing Corporation (STSC).
United Computing Systems, Inc. (UCS).
Xerox Corporation (XEROX).

Commercial Users

Ad Hoc Telecommunications Users Committee (AHTUC).
Aeronautical Radio, Inc. (ARINC).
American Bankers Association (ABA).
American Newspaper Publishers Association, the Associated Press, and Commodity News Services, Inc. (ANPA).
Central Committee on Telecommunications of the American Petroleum Institute (API).
Citicorp.
Seattle-First National Bank (S-FNB).
Securities Industry Automation Corporation (SIAC).
Utilities Telecommunications Council (UTC).

Government and Others

Avakain Systems Corporation (AVAKIAN).
Computer Law and Tax Report (CLTR).
Department of Justice (DOJ).
Donald A. Dunn, Professor, Department of Engineering-Economic Systems, Stanford University.
General Services Administration (GSA).
Institute for Computer Sciences and Technology, National Bureau of Standards (NBS).
Office of Telecommunications Policy (OTP).
Raymond R. Panko.
Southern California Media Reform Workshop (SCMRW).

*Reply Comments***

American Bankers Association.
American Cable and Radio Corporation.
American Telephone and Telegraph Company.
Association of Data Processing Service Organizations.
Boeing Computer Services, Inc.
Bunker Ramo Corporation.
Chemical Bank.
COMSAT General Corporation.
Computer and Business Equipment Manufacturers Association.
Computer and Communications Industry Association.
Control Data Corporation.
General Electric Company (GE).
General Services Administration.
GTE Service Corporation and Its Affiliated Domestic Operating Companies.
Incoterm Corporation.
Independent Data Communications Manufacturers Association, Inc.
International Business Machines Corporation.
National Burglar and Fire Alarm Association.
RCA Global Communications.
Satelllite Business Systems.
Seattle-First National Bank.
Southern California Media Reform Workshop.
Telenet Communications Corporation.
United States Independent Telephone Association.
Western Union International.
Western Union Telegraph Company.

Appendix B

1. Section 64.702, Subpart G, is revised to read as follows:

Subpart G—Participation in Computer Processing by Communications Common Carriers

§ 64.702 Furnishings of computer processing services.

(a) For the purpose of this subpart:

(1) "Computer Processing" is the use of a computer for processing information where the output information constitutes a programmed response to input information. The term "computer" comprehends, *inter alia:* general purpose stored program processors, general and special purpose mini-computers and micro-processors. "Processing" entails the use of a computer for operations upon data which include, *inter alia:*

* See Statements of Commissioner Washburn and Commissioner Fogarty.

*Statements filed by General Electric, Citicorp, Western Union International (WUI) and TRT Telecommunications Corporation (TRT).

**Statement filed by American Satellite Corporation.

arithmetic and logical operations, storage, retrieval, and transfer.

(2) "Data processing" is the processing of input information for the purpose of providing additional, different or restructured information.

(3) A "data processing service" is the offering for hire of computer processing capabilities for the purpose of: (i) transforming or altering for the subscriber of the service the information content or meaning of information provided by the subscriber; or (ii) maintaining and managing, or providing a data information bank or information retrieval service whereby information may be selectively retrieved by or for a subscriber to the service; or (iii) monitoring or controlling an on-going non-communications process or event.

(4) "Hybrid Data Processing Service" is an offering of a data processing service utilizing common carrier communications facilities for the transmission of data between the remote computers and customer terminals.

(b) Communications common carriers may utilize computer processing, including data processing, in the provision of a communications service; provided, however, that any data processing performed by a carrier as part of a tariffed service must directly relate to and be for the purpose of providing a communication service, or for meeting the carrier's own internal operational and financial management needs.

(c) For the purpose of this subpart carrier services are divided into three categories—"voice"," basic non-voice", and "enhanced non-voice" services.

(1) A "voice" service is the electronic transmission of the human voice such that one human being can orally converse with another human being.

(2) A "basic non-voice" service is the transmission of subscriber inputted information or data where the carrier: (i) electronically converts originating messages to signals which are compatible with a transmission medium, (ii) routes these signals through the network to the appropriate destination, (iii) maintains signal integrity in the presence of noise and other impairments to transmission, (iv) corrects transmission errors, and (v) converts the electrical signals to usable form at the destination.

(3) An "enhanced non-voice" service is any non-voice service which is more than a "basic non-voice" service where computer processing applications are used to act on the form, content, code, protocol, etc., of the inputted information.

(d) With respect to the categories of service listed in paragraph (c), communications common carriers owning transmission facilities which are used in the provision of interstate communications services may directly provide only "voice" and "basic non-voice" services. Such carriers may provide "enhanced non-voice" services only through a separate corporate entity on a resale basis. The computer facilities of the underlying carrier which are used in the interstate provision of "voice" and "basic non-voice" services may not be used for those computer processing applications associated with "enhanced non-voice" services and which would render the service more than a "basic non-voice" service. All "enhanced non-voice" services must be provided by carriers on a resale basis. Except as to International Record Carriers, these conditions all apply to all communications common carriers, including section 2(b)(2) carriers, where any carrier itself has operating revenues exceeding $1 million or any such carrier is directly or indirectly controlled by, or under common control with, another carrier or carriers, and the combined annual revenues of all such carriers exceed $1 million.

(e) An International Record Carrier (IRC) shall not engage directly or indirectly in furnishing data processing services to others except as expressly provided in paragraph (f) of this section.

(f) An IRC may, subject to other provisions of law, have a controlling or lesser interest in, or be under common control with, a separate corporate entity that furnishes data processing services to others provided the following conditions are met:

(1) Each such separate corporation maintains its own books of account, have separate officers, utilize separate operating personnel, and utilize computing equipment and facilities separate from those of the carrier.

(2) The IRC files with the Commission a complete statement of the arms and conditions of every written or oral contract, agreement or other arrangement entered into between such carrier and any separate corporation within 30 days after the contract, agreement, or other arrangement is made.

(3) The IRC does not engage in the sale or promotion of data processing services on behalf of any such separate corporation, or sell, lease, or otherwise make available to any other entity any capacity or computer system component on its computer system or systems which are used in any way for the provision of its common carrier communications services.

(g) An underlying carrier providing "voice" or "basic non-voice" services may only offer customer premises equipment which performs more than a basic media conversion function through a separate resale or other subsidiary.

Separate Statement of Commissioner Abbott Washburn

Re: Second Computer Inquiry

The Tentative Decision and Further Notice of Inquiry and Rulemaking represents a major step in this commission's continuing search for a manageable approach to hybrid ("enhanced" or "augmented") communications and data processing activities. The policy to be followed in the case of customer-premises equipment seems to be particularly well founded. It does not depend upon a definitional structure which, at best, is hard to sustain in the face of constantly evolving technology. In fact the conclusion of many experts in these interrelated fields of communications and data-processing is that the Commission cannot adopt any meaningful distinctions. This becomes clear when we look at this most recent attempt to define "data processing services" which would delineate the difficult interface between regulated and unregulated activities. For me, the interrelated definitions [1] proposed in the Tentative Decision raise more questions than they answer. They would cast a shadow of uncertainty as to the regulatory status of possible entrants in this promising field. As the Tentative Decision states:

"[this] may have the result of forcing unregulated data processing entities to obtain common carrier status as the confluence of technologies continues to evolve."

Even more seriously, it also may deter highly qualified firms from entering this market out of a fear of becoming enmeshed in

[1] Tentative Decision and Further Notice of Inquiry and Rulemaking, paragraph 83:

"Computer Processing" is the use of a computer for processing information where the output information constitutes a programmed response to input information. The term "computer" encompasses, *inter alia*: general purpose stored program processors, general and special purpose mini-computers and microprocessors. "Processing" entails the use of a computer for operations upon data which include, *inter alia*: arithmetic and logical operations, storage, retrieval, and transfer.

"Data processing" is the computer processing of input information for the purpose of providing additional, different, or restructured information.

A "data processing service" is the offering for hire of computer processing capabilites for the purpose of: (a) Transforming or altering for the subscriber of the service the information content or meaning of information provided by the subscriber; or (b) maintaining, managing, or providing a data information bank or information retrieval service wherby information may be selectively retrieved by or for a subscriber to the service; or (c) monitoring or controlling an on-going non-communications process or event.

"Hybrid data processing service" is an offering of a data processing service utilizing common carrier communications facilities for the transmission of data between remote computers and customer terminals.

regulation. The opportunity for *ad hoc* manipulation of the boundary between tariffed and non-tariffed services could be viewed as facilitating market allocation activities by future Commissions.

It is because of these concerns with the manner in which the Tenative Decision treats service offerings that I prefer the alternative proposed in paragraph 163:

163. There is another alternative which may be viewed as a further variation of the Tenbtative Decision and what has been proposed above. Various authorities, including expert engineers and expert marketing authorities maintain that "hybrid"communications and data processing activities cannot be effectively differentiated. As underlying technologies continue to advance, their technical distinctions become increasingly blurred. From a marketing veiwpoint customers may generally perceive communications and data processing to be functionally components of the same product or service. We recognize these technological and marketing factors in the structure we have proposed by elininating any retrictions on the type of "enhanced non-voice services" that a resale carrier may provide. As we have indicated, however, this structure only addresses the services of a carrier and does not specifically address the dilemma of a currently unregulated entity being confined to the offering of unregulated data processing services. From the perspective of the unregulated sector our efforts still may be viewed as attempts to create "black and white" mutually exclusive service areas. Accordingly, another approach might be to create an "overlapping area" in which we do not, as a governmental body, try to define whether the services are "communications" and regulated under the Act, or whether they are "data processing" and therefore unregulated. Recognition could be given to a "gray area" in which both forms would co-exist. For example, a carrier could offer a particular "enhanced non-voice service"and file tariffs with us in accordance with our normal procedures, while other firms could offer an identical service outside the umbrella of Title II regulation. In essence, the choice of which way to participate in the "gray area" would be left up to the provider of the service.

This alternative does not depend on difficult definitions.[2] It is simple and it removes regulatory uncertainty by assuring entering firms that the Commission would not "draw the blanket of regulation up over their heads" if they chose to define their offering as a data-processing service. By leaving the definitional problem up to the provider of the service we also extricate the Commission from difficult and sometimes delicate interpretations of various consent decrees that may bind entrants.

This "non-symmetrical" approach is one which we have used in terminals for a considerable time. Nonregulated firms sell customer terminal equipment in a totally unregulated way, whereas the Bell operating companies offer similar terminal equipment under full regulation.

[2] Only pure, pipeline communications services need be identified.

The same non-symmetrical approach is reflected in legislation currently pending in both the House of Representatives and the Senate.

I hope that parties commenting on this important Notice of Inquiry will give serious consideration to the proposal quoted above as an alternative to the structure set forth in the Tentative Decision for treatment of hybrid services.

Separate Statement of Commissioner Joseph R. Fogarty

In Re: Tentative Decision and Further Notice of Inquiry and Rulemaking in Docket No. 20820, Second Computer Inquiry

This proceeding, and the Tentative Decision which I join, represent crucial steps in our efforts to structure rational regulation of the provision of innovative data services. Here, for the first time the Commission addresses the relative merits of alternative means of preventing cross-subsidization and anti-competitive practices. Comments we receive on this issue will be invaluable in the Commission's attempt to examine the feasibility of requiring separate subsidiaries to meet these goals and what part accounting can play in this effort.

Of course, the Commission has used the vehicle of requiring establishment of separate subsidiaries in a number of cases over the years.[3] By contrast, we have also required a carrier to establish a separate accounting system for a service that is the "functional equivalent" of a separate subsidiary.[4] Furthermore, the Commission has determined a methodology for allocating costs among services,[5] and we are now involved in a proceeding to revise the Uniform System of Accounts for telephone companies to require separate accounting by service.[6]

These proceedings have attempted to separate the costs and revenues of various services of the affected carriers. Each of these actions was taken, however, without subjecting the separate subsidiary concept to any form of critical analysis and without any careful consideration of alternative means of accomplishing our policy objectives. Therefore, I believe it is essential for the Commission to inquire into these matters as part of the Second Computer Inquiry.

The concept of separate subsidiaries in the telecommunications field is nothing new. For example, the Bell System structure from its inception has been based on separate corporations for the provision of intrastate services, closely tied with the Long Lines interstate network and Western Electric. However, despite the subsidiary structure, the Bell System operationally is a vertically-integrated whole. On the other hand, there are corporations, such as International Telephone and Telegraph Co., which have an internal corporate structure where the subsidiaries deal with each other more at arm's length.

Therefore, I believe we should examine into the efficacy of requiring separate subsidiaries, and if we decide to do so, the extent to which we should restrict those subsidiaries from contributing to and participating in the corporate vertical integration structure. Posed another way, the primary issue before us is the degree of vertical integration versus arm's length dealings which will best serve the public interest, regardless of the formal structural relationship within the firm. We have never assessed the critical cost/benefit trade-offs inherent in these various degrees of separation, nor have we examined the question of whether the economies which may flow to the ratepayer from vertical integration outweigh potential abuses. We should question through careful analysis whether the productive efficiencies derived from vertical integration compensate for any detriment to competitor or customer from the possibility of cross-subsidization. Certainly, we owe it to the ratepayer to conduct this analysis before we reach a final decision in this inquiry.

Therefore, I hope this proceeding will elicit data, quantified if possible, as to the benefits from vertical integration in terms of specific cost savings with respect to the sharing of facilities and personnel, technological development, speed of reacting to customer needs, and other possible economies. Comments should address the means by which the Commission can ensure that there will be "full and fair competition"[7] in communications markets and, at the same time, ensure that dominant carriers will be precluded from using their monopoly positions in an unfair or illegal manner. In my judgment, the public interest will be served best by a structure that will meet both of these concerns to the fullest extent possible. But, until a cost/benefit analysis provides the necessary record for decision, neither policy objective should be given a presumptive preference.

[3] See, e.g., First Computer Inquiry, 28 FCC 2d 267 (Final Decision, 1971), aff'd in part sub nom. GTE Service Corp., v. FCC, 474 F.2d. 727 (2d. Cir., 1973); Resale and Shared Use, 60 FCC 2d 261 (1976), aff'd sub nom. American Telephone & Telegraph Co. v. FCC, 572, F.2d 17 (2d. Cir., 1978), cert. denied, — U.S. —, 47 U.S.L.W. 3225 (1978); Domestic Communications Satellite Facilities, 35 FCC 2d. 844, 853 (1972); United States Transmission Systems, 48 FCC 2d 859 (1974); RCA Global Communications, Inc., 42 FCC 2d 774 (1973); General Telephone & Electronics Corp., — FCC 2d —, FCC 79-262, released May 11, 1979.

[4] American Telephone & Telegraph Co. (DDS), 66 FCC 2d 375 (1977).

[5] American Telephone & Telegraph Co. (Docket No. 18128), 61 FCC 2d 589 (1976), appeal pending sub nom. Aeronautical Radio, Inc. v. FCC, No. 77-1333, D.C. Cir.

[6] CC Docket No. 78-196, 70 FCC 2d 719 (1978).

[7] Specialized Common Carrier Services, 29 FCC 2d 870, 816 (1971).

[FR Doc. 79-20786 Filed 7-5-79; 8:45 am]
BILLING CODE 6712-01-M

[47 CFR Part 73]

[BC Docket No. 79-164; RM-3312; FCC 79-395]

Inquiry Concerning 9 kHz Channel Spacings for AM Broadcasting

AGENCY: Federal Communications Commission.

ACTION: Notice of Inquiry.

SUMMARY: This Inquiry is instituted in order to solicit comments to assist the FCC in determining whether the channel spacing for AM broadcasting should be changed from 10 kHz to 9 kHz.

DATES: Comments must be filed on or before October 1, 1979, and reply comments must be filed on or before November 1, 1979.

ADDRESSES: Federal Communications Commission, Washington, D.C. 20554.

FOR FURTHER INFORMATION CONTACT: Gary L. Stanford, Broadcast Bureau, (202) 632-9660.

In the matter of 9 kHz Channel Spacing for AM Broadcasting. Notice of inquiry; adopted: June 21, 1979; released: July 2, 1979; By the Commission: Commissioner Lee absent; Commissioner Quello concurring and issuing a statement.

1. The Commission has before it a petition for rule making filed on January 10, 1979, by the National Telecommunications and Information Administration ("NTIA") that requests a reduction in the AM channel spacing from 10 kHz to 9 kHz. Responsive pleadings have been filed by the Association for Broadcast Engineering Standards, Inc. ("ABES"), Robert L. Foxworth (an individual), the Daytime Broadcasters Association ("DBA"), The General Electric Company ("GE"), and the American Broadcasting Companies, Inc. ("ABC").[1]

2. The National Radio Broadcasters Association ("NRBA"), by letter dated February 15, 1979, proposed that a committee should be formed for the purpose of studying the question of 9 kHz channel spacing; and the National Association of Broadcasters ("NAB"), by letter dated February 23, 1979, requested the forming of a joint government-industry advisory committee to study the serveral changes presently proposed in AM and FM broadcasting. Those proposals include the Clear Channel proceeding, Docket No. 20642; the U.S. proposal for the World Administrative Radio Conference ("WARC") to expand the AM broadcast band; quadraphonic FM, Docket No. 21310; AM Stereo, Docket No. 21313; petitions to increase Class IV maximum power; and the subject proposal to change channel spacing.

Introduction

3. The FCC rules specify that AM broadcast stations operate in the band of frequencies extending from 535 to 1605 kiloherts (kHz). Those AM broadcast stations must operate on the 107 AM broadcast channels which are spaced in successive steps on 10 kHz starting with 540 kHz and continuing through 1600 kHz. Each broadcast station's signal consists of a carrier centered in the assigned channel and two sidebands. Because under existing Commission Rules there are not enough channels to meet current requests for additional facilities, an interest in increasing the number of AM channels has been growing.[2] One method of doing this would be to reduce the AM channel spacing from 10 kHz to 9 kHz.[3] Such reduced spacing is already in use in other regions of the world (ITU Regions 1 and 3), but not in the Americas (Region 2).

Objective

4. The objective of this *Inquiry* is to determine whether the United States should change to 9 kHz channel spacing.[4] There are many questions to be answered before the Commission can determine whether such a change should be undertaken. Also, a major objective of this *Inquiry* is to provide information which can be used in arriving at a position on channel spacing at the upcoming Region 2 Administrative Radio Conference on AM broadcasting.[5] It has been alleged that other countries of Region 2, particularly neighboring countries must utilize the same channel spacing and the same frequency plan. Otherwise, unacceptable heterodyne interference can be expected.[6]

Discussion of Pleadings

5. NTIA contends that the proposed channel spacing plan would make available additional channels which would permit the assigning of several hundred additional fulltime stations, while avoiding a possible heterodyne interference problem with Regions 1 and 3 stations.[7] NTIA alleges that the additional fulltime stations that could be allocated would promote diversity in program services and local ownership, including minorities. NTIA states that it could also help "alleviate daytime only stations' problems." NTIA believes that 9 kHz channel spacing would not be detrimental to the authorizing of AM stereo transmissions. NTIA is of the opinion that a world-wide acceptance of 9 kHz channel spacing would enhance international trade because receivers could be manufacturered to meet international standards. NTIA suggests that the rule making could investigate the economic problems that the 9 kHz plan would create for broadcasters and receiver manufacturers. NTIA contends that most existing receivers could be immediately used with 9 kHz spacing.

6. ABES filed a statement on March 1, 1979, which takes the position that NTIA's petition for rule making is premature. ABES suggests that NTIA's proposal be considered in the context of an inquiry into an overall look at AM broadcasting, including the economic impact of "various changes" in AM broadcasting.

7. ABES specifically points to the "growing tide of proposals for radical changes in the structure of the AM Broadcast Service * * *" ABES mentions the following proposals, as part of the move for change:

(a) Congressional efforts to revise the Communications Act of 1934, as amended;

(b) The U.S. proposal for the WARC to expand the AM band;

(c) The Clear Channel proceeding (Docket No. 20642);

---

[1] The date for filing responses to the NTIA petition was extended from February 28, 1979, to April 18, 1979. On April 19, 1979, a request for further extension of time was denied, but it was stated that late-filed material would be accepted "so long as the delay beyond the due date is only a brief one." In view of the circumstances, the late-filed pleadings of DBA, GE and ABC are accepted for filing. Also, we will accept as relevant to this proceeding, two letters, dated April 24 and May 30, 1979, from Henry Geller (NTIA) to FCC Chairman Ferris.

[2] The AM Broadcast Service Working Group for the 1979 WARC has made studies which indicate extensive needs, including projected needs to the year 2000. In response to that group's request, additional spectrum for AM broadcast has been proposed by the United States at WARC-79.

[3] Another method is being investigated in Docket No. 20642, para. 2, *supra*.

[4] Several comments were filed in connection with Docket No. 20271 (the WARC proceeding) proposing such a change. The Commission stated at that time that further studies would be required before a decision could be made. The subject proceeding is intended to be a suitable means for reporting the results of such studies.

[5] A Public Notice, dated April 5, 1979, was issued by the FCC advising of tentative planning for a Region 2 Administrative Radio Conference on AM broadcasting. NTIA's April 24 letter to the Chairman, *supra*, urges the Commission to give priority to the subject petition as as to be fully prepared for that Conference. The first session of that Conference has since been set for March 10, 1980.

[6] Heterodyne interference can occur and cannot be effectively eliminated when two stations are operating with a small difference in frequency. Frequency differences presently exist between the Regions 1 and 3, 9 kHz spacing plan and the United States 10 kHz spacing plan. For example, Region 2 has stations assigned on 550 kHz, whereas Regions 1 and 3 assign stations on 549 kHz. The 1 kHz difference has the potential of resulting in heterodyne interference. However, due to the geographical separation between the U.S. and Regions 1 and 3, substantial levels of interference between the Regions have not been reported thus far. NTIA reports that some heterodyne interference has been received in California and Colorado. NTIA also states its intention of making further measurement tests to determine the extent of heterodyne interference.

[7] NTIA proposed in its May 30 letter, *supra*, to conduct an investigation of the extent interference could be expected if Region 2 did not change to 9 kHz.

(d) Efforts of the Daytime Broadcasters Association to increase the number of channels in order to permit daytime-only stations to operate fulltime;

(e) Class IV efforts to increase nighttime power;

(f) Policy of waivers to enhance minority ownership or operation of stations; and

(g) NTIA's subject proposal.

ABES contends that, because of the interrelationship of all these possible changes, substantial questions remain as to the economic factors and the resulting quality of service to the public. ABES supports the NAB proposal to form a Joint Government-Industry Advisory Committee to study these proposals. ABES would have that Committee investigate "all of the proposals for change in the AM Broadcast market structure." According to ABES, all interested parties should be permitted to participate in "a broad statutory inquiry."

8. ABES feels that NTIA did not give adequate attention to the fact that 9 kHz spacing must be negotiated with other countries before it could be effectuated. ABES claims that all efforts to change the FCC rules to provide for 9 kHz would be in vain should neighboring countries reject the plan. ABES also contends that before the Commission adopts a 9 kHz plan, it must be determined whether "all existing stations and their audiences [can] be accommodated without what the NAB calls 'significantly diminishing service'."

9. DBA submitted a statement in support of 9 kHz channel spacing. DBA included with its statement a 9 kHz plan which would begin on 530 kHz and continue in 9 kHz steps through 1610 kHz. DBA contends that its plan would create 14 new channels which would be used as Class IV channels providing space for all daytimers to operate fulltime.[8] According to DBA, existing stations would be required to move no more than 4 kHz from presently assigned frequencies. DBA argues that there is an "urgency" for this change because "some 46,000,000 people" are presently deprived of a local AM nighttime service. Because of the "urgency", DBA opposes any joint government-industry study group on this subject.

10. GE supports an inquiry into the matter of 9 kHz on receiver manufacturing technology. Because of possible heterodyne interference with other countries, GE is studying the cost of reducing or eliminating such interference. GE believes, however, that international relations require negotiations with the other countries of Region 2. GE alleges that there are economic effects on broadcasters and receiver manufacturers which need to be studied, including the impact from the possibility of worldwide standards, and the costs of making changes in existing receivers, particularly those which are electronically tuned.

11. Robert L. Foxworth submitted his personal comments in response to DBA and NTIA's proposals. Along with a discussion of several matters, he raised questions as to whether other Region 2 countries, particularly Canada, could be expected to go along with a 9 kHz plan, how many stations could be assigned to the new channels, who would finance the changes required in existing stations, would there be adjacent channel interference, and would 9 kHz spacing affect AM stereo.

12. Foxworth suggests that there is now a great opportunity to do research to determine whether there is a problem with Region 2 continuing to operate on 10 kHz channel spacing and the rest of the world using a 9 kHz plan. Should 9 kHz be adopted, he recommends starting at 535 kHz and going in 9 kHz steps to 1606 kHz in order to use existing receivers which, according to Foxworth, in many cases can tune that frequency band.

13. ABC filed a response to the NTIA petition. ABC argues that the issue of channel spacing should not be studied without consideration of the several other AM broadcast proposals that are pending. Briefly stated, ABC supports "an inquiry to examine the various proposals for increased radio assignments in the context of an overall reassessment of basic allocation goals and policies."

14. ABC sets forth several broad issues which would investigate, among other things, unsatisfied radio needs including those of daytime-only stations, minorities, public broadcasting, and the means by which these needs could be met without adversely affecting existing services. To study these issues, ABC supports NAB's proposal to form a Joint Government-Industry Advisory Committee.

15. ABC alleges that NTIA's proposal is not ready for rule making in the absence of answers to numerous questions, which ABC believes should be raised in an inquiry. In addition to determining the many costs involved, the interference that might be expected, the frequency plan that would be used, and other matters, ABC also contends that an investigation is warranted into the Commission's allocation policies. ABC believes that this is necessary in order to assure spectrum space for minorities, educational groups, daytime licensees, and communities without stations. ABC suggests that NTIA develop a computer program to be used in establishing a table of assignments.

16. ABC alleges that the inquiry should look into the economic limitations of the number of stations a community can support. ABC states that "any meaningful review of the various proposals to expand significantly the number of fulltime AM stations must necessarily examine economic realities of the broadcast business."

17. The Commission, as indicated above, has been requested by NRBA to form a 9 kHz committee and by NAB to form a Joint Industry-Government Advisory Committee to consider the several requested changes in AM broadcasting. ABES and ABC support the NAB proposal. It is believed by these groups that it is premature at this time to initiate rule making on the subject of 9 kHz channel spacing.

18. The Commission will reserve action on the request to initiate a Joint Industry-Government Advisory Committee to study all AM broadcasting changes. At the present time, it is more appropriate to have an inquiry on 9 kHz channel spacing to permit participation by all interested parties. We also consider this approach more appropriate than the rule making requested by NTIA.

19. In a Notice of Inquiry, adopted June 22, 1979, in the matter of preparations for a Region 2 Administrative Radio Conference for AM Broadcasting, the Commission invited comments to assist in the preparations for the U.S. position at the Region 2 Conference. We agree with NTIA that it is imperative that, prior to that Conference, the Commission develop a record to establish its position on the question of channel spacing. It was pointed out in that Notice that a separate proceeding was being instituted to investigate the 9 kHz channel spacing question since national issues must be resolved before a fully developed international position can be taken. We therefore invite all interested parties to participate by filing comments pertaining to all aspects of the proposed change from 10 kHz to 9 kHz channel spacing.

The Inquiry

20. The Commission believes that the public, broadcasters, manufacturers of broadcast transmitting and receiving equipment, and all other interested

[8] Approximately 2,300 stations are licensed as daytime-only operations.

parties should now have the opportunity to comment on the proposal to change AM broadcast channel spacing. Comments are invited specifically in response to the following questions and, in general, on all subjects considered appropriate to resolution of the subject inquiry.

I. *What channel spacing plan should be used in the United States?*

21. Comments are invited as to what channel spacing a plan should be adopted. We believe, however, that any change from the present 10 kHz plan should take into consideration the merits of a plan using the same frequencies assigned in Regions 1 and 3. Using the same frequencies would eliminate the question of potential heterodyne interference, and it would permit an internationally standardized receiver design for worldwide use. Of course, this would depend entirely upon the other countries of Region 2 also changing to the same plan. Any other plan should be discussed in light of potential heterodyne interference with stations in other countries. Also, NTIA has raised a substantial question as to "the possibility of inter-region interference if [Region 2] stays with 10 kHz spacing." Therefore, comments are requested as to interference that could be expected should the U.S. retain 10 kHz spacing.[9]

II. *What classifications should be assigned to new channels resulting from a new channel spacing plan?*

22. In selecting classifications, consideration should be given to resulting adjacent channel relationships with existing stations. This raises the question of what method should be used in shifting existing stations.[10] Should the stations be shifted to the nearest frequency which would be 1, 2, 3 or 4 kHz removed? (No changes would be required on some of the frequencies.) Should a daytime station that desires a fulltime operation be removed to one of the new channels? Would there be potential problems with a multiplicity of Class IV stations assigned on a new channel immediately adjacent to a clear channel frequency? Or, should there be a regrouping of certain classes such as the clear channels? It can be anticipated that some new channels will be requested for clear channel operations in other countries. Therefore, proposed classifications of new channels such as Class III, IV, etc., will be subject to negotiations with other Region 2 countries.

III. *What threshold requirements should be established to determine acceptability of applications?*

23. DBA contends that with a change to 9 kHz channel spacing, all daytime-only stations will be able to obtain fulltime authorizations. Under present FCC rules, however, it is unlikely that all daytime station licensees, minorities, educators, special interest groups, etc., would be able to obtain fulltime authorizations. First, under present standards only applicants that can meet the threshold requirements of the rules are eligible. See Section 73.37. Furthermore, even after the threshold requirements are met an applicant must survive a comparative hearing where there are conflicting applications. ABC recommends a table of assignments or some other means to assure space for fulltime operation by daytime-only stations, minorities, educational facilities, or others. Therefore, comments are invited as to what the acceptability criteria should be.

IV. *How much does adjacent channel interference increase with a change from 10 kHz to 9 kHz channel spacing?*

24. For purposes of this question, the extent adjacent channel interference would increase with the change in spacing should be based on the use of existing receivers and present transmission standards. Showings of areas and populations that might lose service would be useful. Questions pertaining to methods of reducing this interferrence are discussed, infra.

V. *What changes can be made in transmission standards to reduce adjacent channel interference?*

25. Some specific changes that should be considered here are reduction in audio bandwidth, changes in audio processing, and improved transmission standards to reduce spurious emissions. Of course, these matters should be considered, taking into account the resulting quality of transmission.

VI. *What are the effects on the performance of existing receivers, and what changes in receiver design can be implemented to compensate for the reduction in channel spacing?*

26. Because of whistle filters, 455 kHz intermediate frequency, digital tuning and overall performance characteristics, reduced channel spacing may require changes in existing receivers. Specific performance characteristics of existing receivers of various grades (mass consumption, automobile, hi-fi, etc.) will assist in determining the impact of 9 kHz channel spacing, especially on the level of adjacent channel interference.[11] Since new receivers would be designed, comments should also be directed to what can be expected in the area of future receiver design to reduce or eliminate adjacent channel interference. Question IX, *infra*, pertains to cost, present and future, for receiver changes.

VII. *In view of changes that can be made both in the transmitted signal and in the design of receivers, what is the best compromise to obtain the best quality (fidelity) reception while reducing the possibility of adjacent channel interference?*

27. For purposes of minimizing adjacent channel interference, receiver design and/or transmission standards may result in restricted audio quality for the listener. Therefore, response to this question should set forth the "best" compromise in transmitter/receiver characteristics to produce a minimum of adjacent channel interference, yet retain reasonable high quality reception for the listener.

VIII. *Taking into account the answers to all the above questions, what protection standards should be adopted for first, second and third adjacent channels?*

28. The FCC rules (§ 73.182(w)) presently specify a desired-to-undesired first adjacent channel signal ratio of 1 to 1 as providing for an adequate separation of stations with the desired signal considered to be no less than 0.5 mV/m.[12] In the case of international agreements, that ratio is 2 to 1. CCIR Recommendation 560 (formerly Rec. 449-2) contains data from which it can be determined that the first adjacent channel protection ratio needed would increase approximately 5 dB with a change from 10 kHz to 9 kHz channel

[9] NTIA's May 30 letter, supra, states its intention to participate in studying and analyzing data pertaining to this matter.

[10] It is necessary here to have established the "Plan" to be used as discussed in response to Question I, supra. DBA and Foxworth each suggest different schemes from that proposed by NTIA for assigning station frequencies, and their plans *do not* conform with the Region 1 and 3 plan. Therefore, some heterodyne interference could be expected with either of their plans. So, the response to this question should support the response to Question I.

[11] NTIA's May 30 letter, *supra*, states its intention of studying and analyzing the impact by actual measurements using about 50 contemporary receivers.

[12] In other words, an existing station is protected from any first adjacent channel proposed operation that would involve over-lap of the two 0.5 mV/m contours. See § 73.182 (v) and (w).

spacing. Comments, however, are invited as to what the needed protection ratio might be in view of the matters discussed in response to questions raised, *supra*. Also, comments should be directed to the standards that would be needed for second and third adjacent channels.[13] Commenters may wish to make clear any assumptions underlying their comments about changes as a result of other Commission proceedings, such as the Clear Channel proceeding.

XI. *What would be the economic impact expected in converting to 9 kHz channel spacing?*

29. The major economic factor is expected to be the costs to the licensees required to change frequency, particularly those using directional antennas. To assist in determining those particular costs, the FCC is preparing a contract which will investigate all the costs to all the licensees converting to a 9 kHz plan. However, comments are invited herein on this subject so as to have the benefit of information from all interested parties. These costs should include all engineering and legal fees, equipment change costs, and all costs related to changing directional antennas including proof-of-performance data. Directional antenna systems vary in complexity from simple two-tower arrays to multitower arrays with different parameters for day and night operations.[14] Therefore, comments are invited as to the extent of the changes that could be expected, and whether these changes in the directional antenna systems would alter the interference situation. Also, comments are ivited as to long-term costs to the licensees—loss of service area, if any; publicity costs; etc., and how these costs might be met.

30. The economic impact to consumers would depend on the findings to question VI above. So, comments are invited on anticipated costs, for consumers, of adapting existing receivers. Also, we seek comments on the potential effects on signal quality for those consumers who might choose not to adapt existing receivers, and to what extent consumers will have an incentive to adopt existing receivers or to purchase new ones.

[13] Presently, second adjacent channel stations are separated so that there is no overlap of the 2 and 25 mV/m contours. Third adjacent channel stations are not permitted to involve overlap of their 25 mV/m contours. See § 73.37.

[14] here, again, NTIA has indicated a willingness to study the problem. They suggest a theoretical and an actual study be made.

X. *What would be the impact of several hundred additional fulltime operations on the radio marketplace?*

31. It has been alleged that the marketplace could not economically support several hundred new fulltime stations. It is further alleged that the quality of service would deteriorate with an increase in number of stations. No supporting data has been submitted to form a basis for either of these allegations. As ABC argues, however, there may be economic limitations as to how many stations a community can support.

32. We are concerned, however, that the Commission cannot collect adequate data to determine correctly how many stations a market can support. Therefore, comments are invited on whether it is appropriate for the Commission to attempt to determine, in advance of a market test, whether several hundred additional stations could be supported.

XI. *Is AM Stereo compatible with 9 kHz channel spacing?*

33. Essentially, this question has already been raised in the AM Stereo proceeding, Docket No. 21313, and it need not be discussed in any detail here.[15] The Commission's analyses of the comments and responsible pleadings in that proceeding will be appropriately considered in this proceeding. Comments on this subject may be filed, however, if desired, in this proceeding.

XII. *How could the change from 10 kHz to 9 kHz channel spacing be effectuated in a timely manner with the known limited number of professional radio engineers available to do the job?*

34. Since thousands of stations would require the professional services of a limited number of engineers, a procedure will need to be developed for changing the stations to their new frequencies with minimum disruption to radio services. Many stations would require only slight modifications where others will require extensive modifications. In considering this question, problems that the FCC will have handling all the applications, proof-of-performances, etc., also should be taken into account.

35. In addition to the matters that have been specifically addressed in this Notice, any other comments related to 9 kHz channel spacing which have not been addressed by questions herein are welcome.

[15] See paragraphs 20 and 21 of the Notice of Proposed Rule Making in Docket No. 21313, adopted September 14, 1978, FCC 78-638.

36. Pursuant to applicable procedures set forth in Section 1.415 of the FCC's Rules, interested persons may file comments on or before October 1, 1979, and reply comments on or before November 1, 1979. All relevant and timely comments and reply comments will be considered by the FCC before further action is taken in this proceeding. It is essential that all issues relevant to changing AM broadcast channel spacing from 10 kHz to 9 kHz be addressed during this comment period. In view of the limited time for preparing a U.S. position for the March 10, 1980, Region 2 Administrative Radio Conference, no extension of the indicated times should be anticipated.

37. In accordance with the provisions of Section 1.419 of the FCC's Rules and Regulations, an original and 5 copies of all comments, replies, or other documents filed in this proceeding shall be furnished to the FCC. Participants filing the required copies who also desire that each Commissioner receive a personal copy of the comments should file an additional 6 copies. Members of the general public who wish to express their interest by participating informally on this proceeding may do so by submitting one copy of their comments, without regard to form, provided that the Docket Number of this Inquiry is specified in the heading. Such informal participants who desire that responsible members of the staff receive a personal copy and to have an extra copy available for the Commissioners may file an additional 5 copies. Responses will be available for public inspection during regular business hours in the Commission's Public Reference Room (Room 239) at its headquarters in Washington, D.C. (1919 M Street, N.W.). Further information concerning this proceeding may be obtained from Gary L. Stanford, Broadcast Bureau, (202) 632-9660.

Federal Communications Commission.

William J. Tricarico,

Secretary.

Concurring Statement of FCC Commissioner James H. Quello

Re: Notice of Inquiry on 9 kHz Channel Spacing for AM Broadcast

I believe that it is necessary to move quickly to build a record to support U.S. policy with regard to channel spacing for the AM broadcasting service. A Notice of Inquiry is probably the single most expeditious means of constructing that record. I would have preferred, however, to have acted with equal speed in establishing the advisory committees advocated by the petitioners.

While there are those who oppose such advisory committees as being unwieldy and

cumbersome, I believe that the information they could provide in this instance is worth the trouble. There are a great many technical, as well as policy, issues involved in this important area. Face to face discussions and interchange of ideas among technical experts from both inside and outside government could add considerably to the Commission's body of knowledge and improve our chances of arriving at a practical decision. Since the Notice of Inquiry and formation of advisory committees are not mutually exclusive, I see no reason why we should not move forward on both at this time.

[FR Doc. 79-20783 Filed 7-5-79; 8:45 am]

BILLING CODE 6712-01-M

[47 CFR Part 90]

[PR Docket No. 79-106]

Changing the Co-Channel Mileage Separation and Frequency Loading Standards for Conventional Land Mobile Radio Systems in the Bands 806-821 and 851-866 MHz; Order Extending Time for Filing Comments and Reply Comments

AGENCY: Federal Communications Commission.

ACTION: Order.

SUMMARY: Extension of time until July 12, 1979, for filing comments and until July 27, 1979, for filing replies in the matter of amendment of §§ 90.365 and 90.377 of the Commission's Rules to change the co-channel mileage separation and frequency loading standards for conventional land mobile radio systems in the bands 806-821 and 851-866 MHz.

DATES: Comments must be filed on or before July 12, 1979 and Reply Comments must be filed on or before July 27, 1979.

ADDRESSES: Federal Communications Commission, Washington, D.C. 20554

FOR FURTHER INFORMATION CONTACT: Lewis H. Goldman, Rules Division, Private Radio Bureau, (202) 632-6497.

In the matter of amendment of §§ 90.365 and 90.377 of the Commission's rules to change the co-channel mileage separation and frequency loading standards for conventional land mobile radio systems in the bands 806-821 and 851-866 MHz, [44 FR 33441].

Adopted: June 27, 1979.

Released: June 28, 1979.

By the Acting Bureau Chief, Private Radio Bureau.

1. The Acting Bureau Chief, Private Radio Bureau, has before him for consideration a June 26, 1979, request of the Electronic Industries Association (EIA) for an extension of time in which to file comments and reply comments in the above-captioned proceeding.

2. In its Notice of Proposed Rule Making in this matter (FCC 79-282, adopted May 3, 1979; released May 23, 1979), the Commission stated:

"The need for prompt relief compels the Commission to promulgate rule revisions as quickly as possible after analysis and consideration of all comments and replies received in response to this Notice. Therefore, we are reducing the customary time periods for comments and replies from 60 and 30 days respectively to 30 and 15 days. Request for extensions of time in which to file comments or replies will not be viewed with favor absent a compelling showing of good cause." (Para. 10)

EIA nevertheless seeks an extension of ten calendar days in which to file comments and nine calendar days for the filing of replies. EIA asserts that due to what it describes as "the delayed release of the . . . Notice, there has been insufficient time allowed to conduct the studies and gather the data necessary to provide meaningful comment in this matter." But the period which elapsed between the adoption and release of the Notice of Proposed Rule Making has not shortened the period allotted for filing comments and replies. As was stated in the Notice, thirty days were provided for filing comments and fifteen days for replies, beginning with the release of the Notice.

3. We agree, however, that this proceeding involves, as EIA asserts, complex issues. Therefore, in view of the relative brevity of the requested extensions, the request will be granted so that EIA will be afforded the opportunity it seeks to complete the studies.

4. Accordingly, the filing dates for comments and replies in the above-captioned proceeding are hereby extended to July 12 and July 27, 1979, respectively.

Federal Communications Commission.

H. Walker Feaster III,

Acting Chief, Private Radio Bureau.[40[FR Doc. 79-20853 Filed 7-5-79; 8:45 am]

BILLING CODE 6712-01-M

INTERSTATE COMMERCE COMMISSION

[49 CFR Ch. X]

[Ex Parte No. MC-125 [1]]

Fare Flexibility For Bus Industry [1]

AGENCY: Interstate Commerce Commission.

ACTION: Notice of proposed rulemaking.

SUMMARY: The Commission, upon consideration of responses filed to proposals submitted by Trailways, Inc., is proposing to allow bus companies to raise and lower, within a fixed zone, the fares that they charge. This freedom would not extend to price increases proposed by carriers collectively through a rate bureau. The Commission is also proposing to allow carriers to negotiate charges with organizers of charter parties for individual charter bus trips. The adoption of these proposals is expected to improve the bus companies' ability to compete with other modes and to enable them to recover more quickly increased costs of providing service.

DATES: Persons who wish to participate should advise the Commission in writing by July 26, 1979. A service list will then be issued and the filing dates for comments will be set.

ADDRESSES: Letters of intent to participate should be marked "Ex Parte No. MC-125" and should be sent to: Office of Proceedings, Room 5356, Interstate Commerce Commission, Washington, DC 20423.

FOR FURTHER INFORMATION CONTACT: Janice Rosenak or Harvey Gobetz, telephone (202) 275-7693.

SUPPLEMENTARY INFORMATION: Trailways, Inc., has filed separate petitions with the Commission requesting the opening of rulemaking proceedings to accord the bus industry (1) downward fare flexibility in the intercity passenger market, (2) complete flexibility (upward and downward) in charter prices, and (3) upward fare flexibility in the intercity passenger market. The Commission published a notice asking for public comment on the first two requests on September 13, 1978 (43 FR 40972), and a notice asking for comment on the third request on January 17, 1979 (44 FR 3608). The comments have now been reviewed, and the Commission has decided to open a rulemaking proceeding and to propose specific changes in its regulations which would allow the bus industry much greater fare flexibility. The proposals have their genesis in the Trailways' petitions, but in some cases the original Trailways' proposals have been modified.

Upward and Downward Fare Flexibility

Trailways proposed that the Commission's regulations be changed to provide that the Commission will not suspend or investigate any fare increases by intercity bus companies

[1] For administrative convenience, we have renumbered and renamed this proceeding. The three former numbers and case names are: No. 36990, Downward Fare Flexibility in the Intercity Passenger Market; No. 36991, Flexibility in Charter Prices; and No. 37074, Upward Fare Flexibility in the Intercity Passenger Market.

which do not exceed 5.75 percent of the rates prevailing for the prior twelve months or 90 percent of the Consumer Price Index, whichever is less. The proposed increases could be taken only at the end of a twelve-month period in which no other interstate fare increase had been received. The fares would be published on 30-days' notice and the Commission would retain the power to suspend any increase which exceeded the limit.

Trailways also proposed that the Commission's regulations be changed to provided that the Commission will not suspend or investigate fare reductions by intercity bus companies which are not below costs or destructively competitive (predatory). Any bus company lowering one of its fares under the new procedure would implicity agree to the exercise of the Commission's power to suspend or investigate the lower fare within 30 days of the effective date upon a finding that the fare is predatory.

The Commission has determined that both of these proposals have merit. We have rejected the viewpoint expressed in some of the comments that one of the proposals and not the other should be adopted. We believe that bus companies should have some freedom to impose fare increases to compensate for inflation and increases in labor and other basic costs. We also believe that bus companies should have some freedom to lower fares so that they may better compete with airlines, Amtrak, and other bus companies.

Having determined that both proposals have merit, we must determine the best method for their implementation. We propose to establish a "zone of reasonableness" within which bus companies may raise and lower their fares without prior Commission approval. We seek comments on this approach and on what the upward and downward limits of the zone should be.

On the upward side, we are not convinced that the Trailways' approach (limiting the increase to the lesser of 5.75 percent of the rates prevailing for the preceding twelve months or 90 percent of the CPI) is the best possible approach. We agree with the Council on Wage and Price Stability (COWPS) that the CPI-related figure should be phrased as 90 percent of the increase in the CPI. COWPS also questioned the relevance of the CPI to bus companies' costs and pointed out that the CPI might be difficult to use. We would like the public to comment on these points and to suggest alternative standards which might be better.

We also seek comments on whether the upper limits of the Commission's zone of reasonableness should be higher or lower than that which would result from application of the Trailways' standard. We have tentatively concluded that the limit which would result under Trailways' proposal cannot be considered excessive, considering the rate of inflation generally and the amount and the number of general increases taken annually by motor carriers. We believe that allowing bus companies freedom to increase fares within this range would have minimal, if any, effect on the public, especially when coupled with freedom to lower fares. Furthermore, under the Commission's existing liberalized entry policies, the threat of competition is a real one which should act to prevent companies from abusing their freedom to raise fares.

Trailways' proposal would allow a once a year increase of the total amount authorized. We would go further and here suggest that these increases may be taken throughout the year, so long as the total for the year on any route does not exceed the maximum standard. We propose that on regulated increases that are also taken during the year, the companies be required to prove that the combined increases still produce a just and reasonable rate. In other words, we will not allow regulated increases which would recoup costs already compensated for through changes in the unregulated fare zone.

The 30 days' notice proposed by Trailways does not present a problem, as it is consistent with present procedures. We do, however, seek comments on whether the notice period for increases should be reduced and, if so, how much.

On the downward side, Trailways has not proposed any definite floor below which rates could not be lowered. Rather, it would have us allow any "non-predatory" decrease, and it suggests that we could invoke some form of suspension power, after the lowered fares became effective, to deal with situations where a predatory pricing practice was found to exist. We do not believe that we have the authority to exercise suspension power in this way, and we are seeking some other means for dealing with the predatory pricing problem. This is a matter of concern to us because we wish to make certain that the larger bus companies do not exercise their market power to drive out competition being provided by smaller firms or deter new entrants who might, at compensatory fare levels, effectively compete with existing carriers. At the same time, we wish to provide the downward pricing flexibility necessary for all bus companies to compete effectively with carriers of other modes. Downward flexibility would also enable bus firms to test and benefit from fare elasticity of demand for services in various markets.

If we allow downward price adjustments without suspension, whether or not we set some definite floor for total annual fare reductions, we run the risk of allowing some predatory fares to go into effect. The likelihood that there would be adverse effects from such fares would be lessened if we were to establish a floor for fare reductions. We would like to develop such a floor, either in terms of costs or, as in the case of the ceiling, as a percentage change from the prior year's fare level. We are considering the possibility of a floor for fare reductions of anywhere from 10 to 30 percent of the prior year's fare, and we seek comments on what the proper limit should be.

In order to be able to deal promptly with situations in which a predatory fare may have gone into effect, we are considering adoption of a procedure which would permit the filing of informal complaints against reduced fares. In the face of such a complaint alleging a predatory pricing practice, the proponent of the fare would have to bear the burden of presenting evidence justifying it. We would render our decision on an expedited basis. If the fare were found to be below the variable cost level—which we propose as the standard for determining whether a fare which is the subject of a complaint constitutes predatory pricing—we would order a fare at the variable cost level or allow the carrier to establish a new fare at that or at some higher level.

Alternatively, it may be possible to reduce the effect of possibly predatory fares by imposing a requirement that reductions contain expiration dates of, for example, 30 days. Under this approach, if a complaint alleging a predatory practice were filed, or the Commission upon its own initiative found that the fare constituted a predatory practice, the fare would expire by its own terms. If not, it could be extended indefinitely. Or, we could apply a different type of "self-destruct" provision by way of a notice in the tariff, as follows:

This filing is based on the Commission's order in Ex Parte No. MC-125. If, within 90 days from the effective date of this fare, the Commission notifies us that the fare is in violation of that order, it is conceded that, to the extent of the violation, the fare has been unlawfully established and is not lawfully

applicable. Prior applicable fares will remain in force and apply.

The Commission would review the fare upon informal complaint or its own initiative. Admittedly, this latter approach could present problems for the carrier. If the Commission found a fare violated its standards (e.g., outside the zone or predatory), overcharge claims could be filed and refunds could be due those who paid the higher fare. We seek comment on these or other possible methods of resolving these disputes.

Certain parties allege that this proposal would mean the end of the small broker. Arguably, large brokers would be able to tie up all carrier equipment. The record at this stage is inadequate for us to reach any conclusions here and we seek further comment on this issue. We also seek comment on the effect more rapid price changes could have on the travelling public, and the desirability of maintaining a fare for a minimum period.

Given the above discussion and assuming we can reach a reasonable solution to the predation and collusion issues, we favor allowing immediate downward adjustments without notice.

In its petitions, Trailways does not address the question of how the upward and downward adjustments would be made. We believe that they must be outside the collective ratemaking activities of the rate bureau, i.e., by independent action. We agree with COWPS that continued collective ratemaking in this area might not be consistent with potential benefits of greater competition under the proposed zone. Thus, discussion of the potential effects of Ex Parte No. 297 (Sub-No. 3), Modified Terms and Conditions for Approval of Collective Ratemaking Agreements under section 5a of the Interstate Commerce Act, and Ex Parte No. 297 (Sub-No. 4), Reopening of Section 5a Application Proceeding to take Additional Evidence, is unnecessary.

One other major issue deserves discussion. Trailways proposes that this free pricing zone be applicable only on fares for intercity, scheduled service. Certain other carriers urge it be applied to all interstate passenger service. We favor the latter approach, and propose that the free pricing zone also apply to commuter service. Whether it would apply to charter service would depend upon whether we decide to implement the charter fare proposal discussed below. We are not at this point sure whether special operations should be included here or treated in connection with the charter proposal. We seek comment on these issues.

Flexibility in Charter Prices

Trailways proposes that bus companies offering charter service be accorded complete upward and downward fare flexibility. Fares would be negotiated between the company and the organizer of a charter party, and tariff filing requirements would be eliminated.

Some of the commentators argued that the proposal is inflationary; we do not agree. Instead we believe its adoption would have a downward effect on prices. the proposal to allow these fares to be contracted is consistent with our policy towards greater competition and pricing flexibility and our recent action in Ex Parte No. 358F, *Change of Policy, Railroad Contract Rates*, 361 I.C.C. 205 (1979).

Comments of smaller companies tended to oppose the Trailways proposal on the grounds that, if it were implemented, large carriers such as Trailways would "skim the cream" of the traffic with low bids and leave the less desirable trips to the local independent carriers. On the other hand, one broker argued that her costs were higher as a Trailways' agent, due to Trailways' superior service and equipment, and, as a result, Trailways' bids were consistently higher than small carriers and were not accepted.

We do not, at this point, accept the "cream-skimming" argument. It does not make economic sense. Good business practice would not allow a large carrier such as Trailways consistently to price its service below cost. Furthermore, it is not at all clear that there are sufficient economies of scale to create large cost differentials between large and small companies in the provision of charter service. Finally, it cannot be assumed that other service revenues of large bus firms will enable them to price charter service at predatory levels.

However, the possibility that adoption of the proposal could lead to predatory and discriminatory pricing presents issues which must be resolved. They involve consideration of the same factors and the same possible solutions discussed with regard to downward fare flexibility. The problem is compounded by the fact that charter revenues may be more critical to a bus company's profitability than its regular-route revenues. The Commission will not ignore that fact in its deliberations, and we seek more detailed cost data on it. At this point, however, we are not willing to halt continued study and comment on the proposal. The opportunity to undertake a test of greater pricing flexibility in an area that is now reasonably competitive should not be dismissed without substantial proof that serious adverse effects would result from its implementation. If the Commission decides to implement some type of charter pricing freedom, it will be monitored and any abuses will be corrected. If abuses persist or the financial position of the industry appears in serious danger, actions will be taken to correct the situation. We now seek comment on the applicability to the charter area of the informal complaint and "self-destruct" procedures previously suggested. We realize that our § 11701 jurisdiction to conduct an investigation requires a hearing, and we would expedite the process to the extent we are able. Are there other possible solutions?

Another concern which we have is that, under the proposal, bus companies could choose or reject traffic at will and provide service only at convenient times of the year. One would think that this occurs in all markets to some extent, and we assume that it is happening today in the charter area. We have no evidence that existing charter services are inadequate to guarantee charter service at a reasonable price for all those who desire it, and our liberalized entry policies should allow new entrants in any area where existing service may not be competitive. Thus, while we see no problem in this regard at this time, we invite evidence on this issue.

We also seek comments on the impact of the proposal on tour brokers who state they will not be able to predict transport cost 8–12 months in advance, a typical leadtime for offering tour packages. We do not see this as an insurmountable problem. Could not the broker contract for such future rates?

While we favor no-notice implementation of fare changes to enable the bus industry better to compete with other modes, we have a technical problem with the Trailways proposal. Trailways proposes the elimination of tariff filing requirements for charter bus companies. However, section 10761 (formerly section 217) of the Interstate Commerce Act requires the filing of tariffs containing rates. We may not ignore this provision, nor do we have the power to exempt traffic from it. We may, however, alter the form in which filings must be made as well as the notice period. We seek comments on possible solutions to this problem. For discussion purposes we suggest the following possibilities:

(1) Allow charter fare changes based on contractual arrangements to be

effective without notice, but require that they be filed in some form, e.g., Trailways' "charter contract orders;" or

(2) Allow filing of a maximum charter fare tariff, thus permitting fares lower than the published level without requiring that all the actual rates be filed.

If these or any other possible solutions are not satisfactory, we propose to apply the zone of reasonableness pricing flexibility concept to charter prices, setting upward and downward limits to the increases and decreases companies could implement without prior Commission approval. This would provide at least some increased pricing flexibility in this area.

Conclusion

These consolidated proceedings represent a major effort towards regulating reform of the motor bus industry.[2] To the extent our authority permits, we desire that bus operators be free to operate as efficiently and as profitably as possible. However, at the same time, this freedom must be balanced against the public need for adequate, non-discriminatory service at the lowest possible cost and against competing carriers' fears of predation. We must also be concerned with the potential for carrier exploitation of monopoly status in certain markets, and the effects, if any, on a carrier's ability to obtain financing with a more volatile rate structure.

In filing comments, interested persons are asked to identify, where applicable, the organization they represent, indicate the type of organization (e.g., carrier, broker, or agent), and explain the manner in which they believe the organization would be affected by adoption of the proposals. Participants should also indicate clearly whether their comments are addressed to charter or line-haul service, or both.

This decision does not significantly affect the quality of the human environment nor is it a major regulatory action under the Energy Policy and Conservation Act of 1975. Participants need not duplicate comments already filed in connection with the previously published Trailways' proposals. We will incorporate all those comments into the public record of this proceeding and will consider them together with comments submitted in response to this notice.

To supplement Federal Register publication, we have directed the Secretary of the Commission to serve a copy of this notice on all motor common carriers of passengers. In this proceeding, we are using the "notice of intent to participate" procedure. Once a service list is prepared, we will direct cross-service of comments in order that the most comprehensive record possible can be developed.

This notice is issued pursuant to the authority of 49 U.S.C. 10321, 10701, 10702, 10704, 10705, 10761, 10762, and 11101 (the Interstate Commerce Act) and 5 U.S.C. 553 and 559 (the Administrative Procedure Act).

Decided: June 25, 1979.

By the Commission, Chairman O'Neal, Vice Chairman Brown, Commissioners Stafford, Gresham, Clapp, and Christian. Commissioner Stafford concurring with a separate expression.

H. G. Homme, Jr.,

Secretary.

Commissioner Stafford, Concurring

I reluctantly concur in the institution of this rulemaking. Personally, I have grave doubts as to the legality of the several proposals and, even if they are found to be lawful, whether they should be rejected for policy considerations. Another matter of concern to me is the extent to which the Commission has actually inhibited petitioner (or others) from the kinds of pricing initiatives proposed here. I am particularly interested in receiving public comment addressed to each of these issues. Specific examples should be cited.

After written representations are submitted and issues are narrowed, I hope that we will hold oral argument to clarify and resolve points in conflict in this highly significant proceeding.

[FR Doc. 79-20800 Filed 7-5-79; 8:45 am]

BILLING CODE 7035-01-M

[2] We note the filing of the Independent Bus Operators Committee on Regulation and the United Bus Owners of America (as expressed in their petitions docketed as Ex Parte No. MC-124 and No. 37188 respectively). We have concluded not to postpone this stage of this proceeding. The two groups are invited to participate here and state their positions on this record.

[49 CFR Parts 1011 and 1100]

[Ex Parte No.367]

Tariff Integrity Board

AGENCY: Interstate Commerce Commission.

ACTION: Notice of Proposed Rulemaking.

SUMMARY: Beginning October 1, 1979, the Commission will no longer examine every tariff filing to determine compliance with regulatory requirements. Instead, only a sample of tariffs will be reviewed. By these proposed rules, the Commission would adopt a simplified and expedited procedure for striking from the files tariffs which have been established in violation of the Commission's tariff regulations, statutory notice provisions of the Interstate Commerce Act, and orders of the Commission or the courts.

DATES: Comments on the proposed rules should be filed on or before August 20, 1979. Fifteen copies, if possible, should be submitted.

ADDRESS: Comments should be sent to: Secretary, Room 5356, Interstate Commerce Commission, Washington, D.C. 20423.

FOR FURTHER INFORMATION CONTACT: Martin E. Foley, Director, Bureau of Traffic, (202) 275-7348.

SUPPLEMENTARY INFORMATION: We have established a random sampling tariff examination program for checking compliance with the tariff regulations (49 CFR 1300 *et seq.*), the provisions of the Interstate Commerce Act (49 U.S.C. 10101 *et seq.*), and orders of the Commission or courts. Previously, we examined all tariffs for compliance with regulatory and statutory provisions prior to the effective date of the publication. We remedied any non-compliance that we dected by rejection or criticism of the offending publication. Under random sampling tariff examination, we expect that some tariffs that go into effect will contain provisions which are unlawful because they violate our regulations or the Interstate Commerce Act.

Accordingly, we propose to adopt a simplified and expedited procedure by which a tariff user may file a verified complaint to establish that a tariff has been unlawfully established because it violates some provision of the Act or our tariff regulations. We will delegate authority to an employee Tariff Integrity Board in the Bureau of Traffic to review the complaint and the challenged publication.

The Board will be chaired by the Director of the Bureau of Traffic. The other two members will be the Chief of the Section of Tariffs and the Chief of the Section of Rates and Informal Cases. As is the case with four other employee boards in the Bureau of Traffic, the Tariff Integrity Board will not be a full-time assignment for the members. Staff will handle the work, and the members will vote on the cases.

The Board will make findings and conclusions. It will be empowered to enter orders striking from the files those tariffs which are found to have been established in violation of those provisions of the regulations or the Act for which the publications would have been refected had the violations been detected before the tariffs became effective.

Actions of the Board may be appealed to a Division of the Commission for

reconsideration pursuant to our Rules of Practice.

BACKGROUND: We are empowered to reject tariffs prior to their effective date if they violate a provision of the Act, our tariff regulations, or a court or Commission order. The authority to reject tariffs has been delegated to the Director and Assistant Director of the Bureau of Traffic and the Chief of the Section of Tariffs. Our policy has been to reject a tariff prior to its effective date (or in the case of tariffs which have been filed on less than 30 days' notice, within 30 days of the date the tariff was submitted to the Commission).

With respect to tariffs which have become effective, but which violate the statute, the regulations, or an order, our practice has been to attempt to persuade the tariff publisher to remove the unlawful provision. Where this approach has failed, we have commenced a formal proceeding pursuant to 49 CFR 1100.24 *et seq.*

With the implementation of the random sampling tariff examination program, we believe there may be a need for an expedited and simplified procedure to deal effectively with unlawfully established tariffs. This proposal is intended to satisfy that need. We believe that the new procedures will provide a prompt response to tariff users without adding to the Commission's already large formal case docket.

The proposed regulations establish a method for acting on verified complaints that allege that tariffs have been unlawfully established in violation of the Act, tariff regulations, or orders of the Commission and courts. The proposed regulations will only apply to tariffs that would have been rejected had the violation been detected before the tariff became effective. The regulations are designed to apply to tariffs that contain an obvious or *prima facie* flaw: (1) failure to give statutory notice; (2) failure to use a symbol or improper symbol use; (3) typographical mistake which makes a tariff impossible to apply; (4) erroneous cancellation; (5) violation of a special permission order, other orders of the Commission, or orders of the courts; (6) an attempt to change a rate which has not been in effect for 30 days; and (7) duplicating rates. This procedure is not intended to apply to substantive issues such as reasonableness, preference, prejudice or discrimination.

The issuing carrier or publishing agent may file a written answer to the allegations contained in the complaint. The complainant may file a reply.

The Tariff Integrity Board will consider all pleadings as well as the challenged publication. If the Board finds that a tariff has been unlawfully established, it may enter an order striking the tariff from the files. A complaint must be filed within 60 days of the tariff's effective date in order to be considered under this expedited procedure. Complaints filed more than 60 days after a tariff's effective date will be handled under the Commission's normal formal complaint procedure. In addition, if there is a disputed issue of material fact, the matter will be referred to the Commission for handling under the formal complaint procedure.

The proposed regulations leave undisturbed our procedure for rejecting tariffs before their effective date.

(1) We propose to amend Part 1100 of Title 49 of the Code of Federal Regulations by adding Section 1100.22a, Special Procedures for Dealing With Unlawfully Established Tariffs or Rates, as follows:

(a) *Scope of Special Rules:*

(1) These special rules govern the filing and processing of complaints that allege that a tariff has been unlawfully established in violation of a provision of the Interstate Commerce Act, the Commission's tariff regulations (49 CFR 1300 *et seq.*), or orders of the Commission or a court.

(2) These rules apply only to an unlawfully established tariff that would have been subject to rejection had the violation been detected before the tariff became effective.

(3) These rules do not apply to complaints alleging substantive violations, such as unreasonableness, undue preference, prejudice or discrimination.

(b) *Definition of Unlawfully Established Tariff:* For the purposes of these rules a tariff is unlawfully established if it does any of the following: (1) fails to give proper statutory notice; (2) omits or uses symbols improperly; (3) contains typographical errors that prevent proper tariff application; (4) contain erroneous cancellation(s); (5) violates the Commission's tariff regulations, statutory provisions of the Interstate Commerce Act, or orders of the Commission or a court; (6) purports to change rate schedules that have been in effect less than 30 days; and (7) contains duplicating rate schedules.

(c) *Form and Content of Complaint:*

(1) While no special form of complaint is required, the complaint must contain information that specifically indentifies the tariff in issue by name, number, publishing official, effective date and item number.

(2) The complaint must set out all the facts that the complainant believes demonstrate that the tariff has been unlawfully established.

(d) *Answer and Reply:*

(1) The issuing carrier or publishing agent may answer the complaint in writing not later than 10 days after the filing of the complaint with the Commission.

(2) The complainant may file a written reply not later than seven days after the filing of the answer with the Commission.

(e) *Processing of Complaints:*

(1) Complaints will be serially numbered as filed.

(2) After reviewing the challenged tariff and the pleadings, the Tariff Integrity Board will make necessary findings and determine whether the tariff has been unlawfully established in violation of the Interstate Commerce Act, the Commission's tariff regulations, or a Commission or court order.

(3) If the Tariff Integrity Board finds that a tariff has been unlawfully established, it may enter an order striking the tariff from the files.

(4) An administrative appeal of the Tariff Integrity Board's decision may be taken, as appropriate, pursuant to Rules 96–98 of the Rules of Practice (49 CFR 1100.96–97).

(5) If there is a disputed issue of material fact, the Tariff Integrity Board will refer the matter to the Commission for handling under the formal complaint procedure (49 CFR 1100.24 *et seq.*).

(f) *Time Limits:*

(1) A complaint must be filed within 60 days of the tariff's effective date in order to be considered under these special rules.

(2) Complaints filed more than 60 days after a tariff's effective date will be handled under, and must comply with, the Commission's formal complaint procedures (49 CFR 1100.24, *et seq.*).

(3) Requests for extensions of time to file answers or replies will not be granted except in extraordinary circumstances.

(g) *Miscellaneous Provisions:*

(1) All pleadings (complaint, answer, reply, must comply with the attestation and verification procedures of Rule 15 of the Rules of Practice (49 CFR 1100.15).

(2) All pleadings should be addressed to the Secretary, Interstate Commerce Commission, Attention: Tariff Integrity Board, Washington, D.C. 20423.

(3) The complainant shall serve a copy of its complaint and reply, if any, on the issuing carrier or publishing agent.

(4) The issuing carrier or agent shall serve a copy of its answer on the complainant.

(5) All pleadings shall include a statement certifying that a copy of the pleading has been served on other parties.

(2) We propose to amend Part 1011 of Title 49 of the Code of Federal Regulations by adding a new paragraph (k) to § 1011.6 as follows:

§ 1011.6 Employee boards.

* * * * *

(k) *Tariff Integrity Board:* Determination of complaints alleging that a tariff has been unlawfully established in violation of the Interstate Commerce Act, the Commission's Tariff Regulations, or orders of the Commission or the courts, for which the tariff would have been subject to rejection had the violation been detected before the tariff became effective.

This notice of proposed rulemaking is promulgated under the authority contained in 49 U.S.C. 10321, 10762, 10304, and 10305 and 5 U.S.C. 553 and 559.

By the Commisson, Chairman O'Neal, Vice Chairman Brown, Commissioners Stafford, Gresham, Clapp, and Christian. Commissioner Stafford concurring with separate expression.

Dated: June 21, 1979.

H. G. Homme, Jr.,

Secretary.

Commissioner Stafford, concurring: I am opposed to the new policy of examining tariff filings on a random basis. This change in policy received little or no attention when it was announced as part of our 1980 Budget. One of the unheralded consumer-oriented services that this Commission performs has been the examining of all tariffs before they go into effect. This examination protects the public from all manner of rate filing abuses (some intentional, some not) by the carriers. It is an important, worthwhile activity, and should not be diminished in importance by using random sampling techniques.

Nevertheless, while I oppose the change in procedure, the creation of this Board and the rules under which it will operate seem reasonable.

[FR Doc. 79-20799 Filed 7-5-79; 8:45 am]

BILLING CODE 7035-01-M

[49 CFR Part 1127]

[Ex Parte No. 293 (Sub No. 8)]

Standards for Determining Commuter Rail Service Continuation Subsidies

AGENCY: Rail Services Planning Office, Interstate Commerce Commission.

ACTION: Proposed amendments to the compensation principles that would reflect a change in the ownership of rail lines.

SUMMARY: On August 15, 1978, the Rail Services Planning Office (RSPO) issued Interpretation No. 9 relating to the "900-day option" under which a commuter authority could purchase certain lines from Consolidated Rail Corporation (Conrail) for commuter service. Interpretation No. 9 states that a rulemaking would be required to develop specific amendments to the Standards For Determining Commuter Rail Service Continuation Subsidies (Standards) to bring the language of the Standards into conformance with the conceptual issue resolved by the interpretation. In Interpretation No. 9, RSPO ruled that a change in the ownership of the rail property would affect the cost responsibilities of the parties. The proposed amendments to the regulations reflect the comments received from the parties in response to a notice of proposed rulemaking issued October 19, 1978 (43 FR 49825).

DATE: Comments may be filed on or before August 10, 1979.

ADDRESS: An original and six copies of any comments should be mailed to: Interstate Commerce Commission, Section of Rail Services Planning, Room 7383, Washington, D.C. 20423, ATTN: RSPO Commuter Standards.

FOR FURTHER INFORMATION CONTACT: Stephen M. Grimm, Cost and Subsidies, Branch, Section of Rail Services Planning, Interstate Commerce Commission, Washington, D.C. 20423, (202) 275-0838.

SUPPLEMENTARY INFORMATION: In Interpretation No. 9, RSPO decided that a change in the ownership of a rail property would alter the cost responsibilities of the parties governed by the Standards. The interpretation was issued at the request of the Southeastern Pennsylvania Transportation Authority (SEPTA). SEPTA raised the issue of whether cost responsibilities would be affected by a change in ownership of rail properties. SEPTA raised this issue at the time when it and other commuter authorities were contemplating whether to exercise their "900-day option" to purchase certain rail lines from Conrail for commuter service. RSPO ruled in the interpretation that if a commuter authority purchased a line the commuter service would become the dominant user and would bear the base costs associated with the line. Because the interpretation resolved only the conceptual issue, a rulemaking proceeding is required to adequately develop the specific changes to the Standards required as a result of the interpretation. On October 19, 1978 RSPO issued a notice of proposed rulemaking requesting interested parties to comment on any area of the Standards which they believed should be amended to reflect the ownership concept, *i.e.* that the owner of the property is presumed to be the dominant user and therefore should bear the base costs associated with the line. RSPO requested that the parties pay particular attention to the Speed Factored Gross Tons Formula, return on investment and related accounts, and any other areas of the Standards which they believed would be affected by the interpretation.

Dominant User Concept

Interpretation No. 9 resolved the conceptual issue of the relationship between "ownership", "dominant user", and "base cost" in a manner RSPO believes is consistent with the compensation principles of the Final System Plan and the underlying concepts of cost allocation embodied in the Standards. However, RSPO is concerned that certain of the parties submitting comments in response to the notice of proposed rulemaking have misconstrued their application. Both the Commonwealth of Pennsylvania Department of Transportation (PennDOT) and the New Jersey Department of Transportation (NJDOT) expressed concern that Interpretation No. 9 will result in the commuter authorities incurring the base costs for lines over which no commuter service is currently operated. PennDOT notes that "[t]here are many examples in existence where the owner of a rail line is not the dominant user, or even a user at all". NJDOT states that it has "acquired some line segments for potential future commuter use over which no commuter service operates" and that "where the minority user (freight service) is the sole user all costs are solely related to freight."

SEPTA and NJDOT also assert that "ownership" must be associated with "management control" before the "base costs" can be shifted from Conrail to the commuter authorities. SEPTA notes that the "execution of the deeds . . . will not

immediately change the operation of the rail facilities" and "contends that until ownership ripens into control of the use of rail properties, SEPTA should not pay base costs. . . ." NJDOT states that

. . . the owner has to have management control of the facilities so that he can 'configure the facilities' and ensure the maintenance levels he requires for his 'service needs.' Ownership without control does not fulfill RSPO's 'basic premise.'

The concepts of "sole user" and "management control," aside from being difficult to define, are issues which were resolved in Interpretation No. 9. As such, they are beyond the scope of this rulemaking. In that interpretation RSPO found that a rigid definition of "dominant user" was necessary in part "because of the administrative impossibilities associated with trying to decide, on a line-by-line basis, which service is the dominant user and which is the minority user." RSPO noted that, regardless of the criteria selected, certain lines would constantly be in a state of flux as to which service was the dominant user. This situation would cause uncertainty as to the cost responsibilities and liabilities of each party and could ultimately threaten the stability of the subsidy program. RSPO believes that the use of additional undefined factors such as "sole user" or "management control" could cause the uncertainty we have attempted to avoid.

However, RSPO agrees with the parties' concern that a misreading of Interpretation No. 9 could result in cross subsidization. In particular, where only one type of rail service is operated over a line owned by another party, RSPO believes that all costs of operation, for the properties that are used and useful, are attributable to that service. As such, both direct and common costs would be assignable to that service. However, the parties should consider the condition of the properly at the date of conveyance as the governing criterion for the assignment of maintenance costs. The owner should not expect the user to be liable for the costs of rehabilitation or accelerated maintenance of the properties. The user, in turn, must assure that the properties do not deteriorate below the level at conveyance date.

Conrail identified a related issue. In Conrail's view, RSPO's jurisdiction under the Regional Rail Reorganization Act of 1973 (3R Act) is limited to determining the amounts of commuter subsidies and federal financial assistance payments. Conrail believes that if a commuter authority assume direct responsibility for rail service on its facilities, RSPO would not have jurisdiction to establish the amounts payable by Conrail for the freight service easement granted by the Final System Plan.

The issue of RSPO's jurisdiction governing the allocation of costs between services was treated extensively in Interpretation No. 9. At that time, RSPO ruled that its jurisdiction, as granted by Congress, is not restricted by a change in title and that jurisdiction is applicable to all lines purchased by the commuter authorities under the "900-day option." At that time RSPO stated that:

The issue is not the determination of the fees or charges to be assessed Conrail for freight operations usage, but the appropriate allocation of joint costs once title passes.

RSPO finds no compelling reason to alter this position. Indeed, the positions expressed by the parties indicate that RSPO's failure to exercise its jurisdiction over the allocation of costs for lines purchased by the authorities would undoubtably result in cross subsidization. RSPO is available to mediate disputes between the parties, subject to the procedures established in the Standards.

Determination of Base Costs

The identification of the elements that are includable in the "base costs" generated considerable comment. SEPTA, NJDOT and Conrail all construed base costs in different manners.

In SEPTA's view the base costs are made up of:

. . . (1) all direct costs associated with SEPTA service, (2) variable portions of common (indirect) costs . . . and (3) fixed common costs which are directly traceable to SEPTA lines and are under the control of SEPTA management.

SEPTA avers that other fixed costs "beyond the ability of SEPTA to control . . . should be totally allocated to the non-commuter service. . . ."

NJDOT indicates that base costs are those that "apply to those specific line segments [purchased by the commuter authorities] but not to territory-wide costs."

Conrail states that there are basically four categories of costs incurred in operating a subsidized commuter service, as follows:

First, there are those costs which are directly attributable to the operation of the commuter services. . . . Second, there are . . . the variable common costs . . . presently apportioned between Conrail and the commuter subsidizers according to the formulae outlined in the RSPO standards. Third, there are those fixed common costs remaining after variable portions have been removed, which are presently borne by the freight service. Finally, there are those general overhead costs which relate to railroad-wide services which are not presently apportioned.

Conrail states that the first two categories are unaffected by the interpretation and the latter two present certain problems in assignment to the commuter service. According to Conrail, the fixed common costs remaining after the variable-common costs have been apportioned are clearly to be borne by the owner of the property. However, Conrail cites several examples where assignment of these costs on the basis of ownership may be difficult. Conrail notes, for example, that an interlocker operator may have control of several interlockers each having a different owner. Conrail comments that in this situation the question becomes which owner will bear the fixed costs of the operator. As to the second type of fixed costs, overhead and similar costs which are currently not apportioned to commuter service at all, Conrail is unsure as to whether these costs are to be included. Conrail believes that conceptually, if Interpretation No. 9 is carried to its "ultimate reaches," it could require that these costs be in part imputed to the commuter authorities.

In Interpretation No. 9, RSPO stated that the dominant user "would bear the base costs associated with the line". Base costs are those line-related costs remaining after the assignment of direct and the apportionment of the variable common costs to the minority user(s). No apportionment of the general overhead expenses was intended in the interpretation and these costs will continue to accrue only on an actual basis. If Conrail believes that certain general overhead personnel or facilities are avoidable as a result of the purchase of rail properties by the commuter authorities, then these individuals or facilities should be included in the manpower or facilities utilization plans.

As a practical matter, where a base cost may be attributable to more than one owner, as in Conrail's hypothetical example of an interlocker operator, the parties may agree to apportion such costs based on the results of a special study or the allocation procedures currently contained in the Standards.

Effective Date of Conveyance of Property

Both Conrail and NJDOT commented on the effective date that the changes in cost responsibility should occur. Conrail contends there are three dates that RSPO should consider: April 1, 1976, Conrail's conveyance date; September

18, 1978, the date of expiration of the 900-day option; and March 31, 1979, the expiration date of the extended "900-day option". Conrail asserts that:

Since the majority of the lines acquired or proposed to be acquired by the commuter agencies was conveyed to Conrail on April 1, 1976, due primarily to the operation of commuter passenger service over those lines, Conrail believes that responsibility for the base maintenance costs should be retroactive to april 1, 1976. This position is supported by the mandate of the Congress that the acquisition price which states or commuter agencies are to pay Conrail for these rail lines is to be computed on the basis of a value related to Conrail's acquisition price plus improvements and maintenance costs and additional expenses resulting from the transfer of properties, less any payments made by the purchaser during the interim.

The NJDOT recommends that any change in cost assignments as a consequence of a change in ownership should be effective on the date of ownership transfer and that there should be no retroactive period.

RSPO believes that any change in cost responsibilities occurs concurrently with the date of transfer of ownership and that this transfer has no retroactive effect upon the cost allocations provided for under the Standards.

Responsibility for Personal Injuries and Property Damage

SEPTA asserts that the liability of the parties for personal injuries and property damage is affected by Interpretation No. 9. SEPTA proposes that for lines acquired under the "900 day option," the liability of the parties under § 1127.7(f)(3)(vii) be reversed. In effect, this would result in the freight service becoming liable for accidents involving commuter authority property. SEPTA states that the current regulation "apparently was based on the status of the subsidizer as a 'minority' or 'avoidable' user." SEPTA states that:

. . . a subsidizer owning the rail properties but required by law to permit Conrail to conduct freight operations should not be burdened by liability costs for incidents which would not have occurred but for the presence of freight operations.

RSPO does not believe that an adequate record has been developed upon which to propose a change in § 1127.7(f)(3)(vii) at this time. Therefore, RSPO continues to adhere to its previous rulings on the liability of the parties. RSPO is also reluctant to propose any changes in the liability section prior to the completion of the Secretary of Transportation's statutorily-mandated report on this matter.

However, if the parties believe that this issue is critical to the revision of the Standards, RSPO invites proposals to be submitted. RSPO would be particularly interested in the parties' views of the relationship between the liability of the freight service and section 304(e)(7)(A) of the 3R Act, as amended.

Specific Changes to the Standards

RSPO found that the parties generally agreed that relatively few changes in the Standards would be required to incorporate the thrust of Interpretation No. 9. The changes that were recommended were primarily of a technical nature. There was a general consensus that changes were required in the Speed Factored Gross Tons Formula and in the return on value section. Other areas in which changes were suggested included: the Manpower and Facilities Utilization Plan; depreciation, retirements, and dismantling of equipment; and property tax liabilities. RSPO has carefully reviewed the suggestions and included the majority of them in the proposed revisions.

Conrail suggested a specific revision to the Speed Factored Gross Tons Formula that is not included in the proposed revisions. Conrail recommended that Appendix III be modified to incorporate definitions for main and branch lines. Conrail indicated that main lines should be defined as those lines carrying 5 million or more gross ton-miles per year per route mile. Branch lines would defined as those carrying less than this amount. No other party commented on the need for such definitions. RSPO is not convinced that definitions are necessary.

RSPO requests comments on the proposed revisions to the Standards appended to this report.

This is not a major Federal action significantly affecting the quality of the human environment.

Issued: June 26, 1979, by Alexander Lyall Morton, Director, Rail Services Planning Office.

By the Commission.

H. G. Homme, Jr.,

Secretary.

Proposed Regulations

Part 1127, Chapter X, Subchapter B, Title 49, Code of Federal Regulations

§ 1127.1 [Amended]

1. Section 1127.1: these definitions are amended to read as follows:

"Actual" means charges for rail facilities, properties and services which are directly identified with commuter service excluding those costs which are apportioned under section 1127.7 (f). Such charges shall be included in the proper account whether incurred by the subsidizer or the railroad.

"Common Costs" means charges for rail facilities, properties and services in the designated area which are incurred by the subsidizer and other users and which are not solely for the benefit of a particular service. Such charges shall be included in the proper account.

"Designated area" means a portion of the rail facilities such as track segments, buildings and yards, for which costs are collected and apportioned between commuter and other services. A designated area may extend beyond or outside the commuter service area.

"Manpower Utilization Plan" means a document identifying the labor forces used in providing commuter passenger service.

2. Section 1127.1: add the following:

"Base costs" means all costs that are specifically related to a rail property and/or facility, except those costs which could be avoided if the minority user(s) service were not present.

"Dominant user" means the person, carrier, State, or local or regional transportation authority who is the owner of a rail property and/or facility.

"Minority user" means other users of a rail property and/or facility on an incremental (use) basis.

3. Section 1127.3(d) (2) and (3) are amended to read as follows:

§ 1127.3 Subsidy agreement.

* * * * *

(d) * * *

(2) *Significant Use.* Unless the parties agree otherwise, the subsidizer shall be deemed a significant user of the rail properties in the areas designated on the facilities utilization plan, and shall be assigned the directly indentifiable and common costs, including base costs as applicable, of providing the commuter passenger service.

(3) *Insignificant Use.* A subsidizer who is a minority user and who is proposing incidental use of rail properties in the designated area, may be assigned the directly identifiable costs incurred in providing the commuter passenger services, plus an allowance for overhead as negotiated by the parties. If the parties are unable to agree on an overhead allowance, the methodology for apportioning common costs specified in section 1127.7 shall apply.

* * * * *

4. The first paragraph of § 1127.5 (a) and paragraph (b) are amended to read as follows:

§ 1127.5 Access to records, audit, and inspection.

(a) The subsidizer, RSPO, and the Secretary of Transportation shall have reasonable access to the records, accounts, working papers, and other documents and to the properties and equipment of any railroad or subsidizer which provides commuter passenger service or whose properties and equipment are used in providing commuter passenger service for the following purposes: * * *

(b) The properties and records described in subsection (a) shall be made available for inspection and examination by the subsidizer, RSPO, or the Secretary of Transportation during regular business hours at a time and place mutually agreeable to the parties. The railroad or the subsidizer shall also reproduce such records, providing the requesting party pays the reasonable cost thereof.

5. Section 1127.7(a), (b), and (c) are amended to read as follows:

§ 1127.7 Avoidable costs of providing service.

(a) *Assignment of costs.* To the maximum extent practicable, the directly identifiable and common costs shall be developed from a facilities utilization plan and a manpower utilization plan. The base costs shall be assigned to the dominant user. The facilities and manpower utilization plans, developed on the basis of dominant and minority user(s), are to be completed with the assistance of available and appropriate cost and accounting records such as time sheets, material requisitions, charge cards, vouchers, and the like. [All accounts shall be separated between labor and material (non-labor) charges.] Otherwise costs may be assigned to the minority service in a manner agreed to by the parties. The parties may rely on historical data; conduct special studies; develop their own apportionment formulae based on use; or agree on a combination of these methods. Upon request of either party, RSPO will mediate disputes concerning the proper methodology for assigning costs. Any costs which are not assigned under the foregoing procedure shall be assigned in accordance with the methodology prescribed in subsection (e) and (f) below, subject to the condition that either party may request a special study. The requesting party will be responsible for designing the study and obtaining the other party's approval of the design. The results of the study will be binding on both parties unless they mutually agree to disregard the results. Where commuter service is not the dominant user the avoidable costs common to two or more commuter services shall be apportioned between them on the basis of car-miles operated under the respective offers of financial assistance or subsidy agreements. In assigning costs to the minority user(s) it is understood that the amounts charged to a particular function shall include both the directly attributable expenses and the portion of the common expenses for that function. Also, the assignment of common costs associated with some supervision of overhead functions that relate to both dominant user and minority user(s) activities requires the inclusion of applicable dominant user account to the apportionment base.

(b) *Facilities Utilization Plan.* The parties shall develop a facilities utilization plan which shall identify the dominant and minority user(s). The facilities utilization plan shall identify and itemize the road and equipment properties used by the minority user(s) and assign to each property or group of properties the agreed percentage of use devoted to the minority user(s). In the event that there is only one service being operated the facilities utilization plan shall identify only those properties used and useful to that service. The plan shall identify those road properties which are avoidable upon discontinuance of the minority user(s) service for the purposes of determining road depreciation, retirement and dismantling charges [section 1127.7 (e)–(f)] and value of road properties [section 1127.8(b) and (c)]. The roadway properties and facilities should be divided into areas or segments consisting of stretches of property where operations or use remain fairly constant and pinpointing those places where the operations or use change (e.g., number of tracks change, diverging or entering branch lines and other similar changes). Properties and equipment normally covered in a facilities utilization plan include: trackage; signal system; electrification system; interlocking plants; bridges and drawbridges; stations and platforms; rail-highway crossings; yards; power plants; shops; enginehouses and servicing facilities; storehouses; land; rolling stock; and other facilities or equipment. Source data normally includes equipment rosters, track diagrams or maps of the properties in the above categories, and usage measures for each class of facility and equipment by specific facility or segment (e.g., track density charts, trains sheets, timetables, blocking records, yarding programs, station workloads, etc.) to determine the percentage of use of facilities or equipment in providing the minority service(s).

(c) *Manpower Utilization Plan.* The parties shall also develop a manpower utilization plan separated between designated areas in which the commuter authority is the dominant user and designated areas in which the commuter authority is the minority user. Where the commuter service is the dominant user the plan shall identify the labor forces used in providing both the commuter service and any minority service(s). Where the commuter service is the minority user the plan shall identify the labor forces used in providing the commuter service. The plan shall list the persons employed according the job title, work location, account and percentage of time devoted to minority service duties.

§ 1127.7 [Amended]

6. Section 1127.7(e)(1) is amended as follows:

a. Add the reference "See Footnote 2" to the "Basis of assignment to commuter service" listed for the following accounts:

xx-14-39
xx-17-39
xx-15-39
xx-18-39
xx-16-39
xx-19-39
62-14-00
62-17-00
62-15-00
62-18-00
xx-14-99
xx-17-99
xx-15-99
xx-18-99
xx-16-99
xx-19-99

b. Add the reference "See Footnote 3" to the "Basis of assignment to commuter service" listed for the following accounts:

62-16-00
62-19-00

7. Section 1127.7(e)(2) is amended as follows:

Add the reference "See Footnote 3" to the "Basis of assignment to commuter service" listed for the following accounts:

xx-24-39
xx-26-39
xx-25-39
xx-27-39

8. Section 1127.7(e)(4) is amended as follows:

Add the reference "See Footnote 4" to the "Basis of assignment to commuter

service" listed for the following accounts:

64-62-00
64-63-00

9. Section 1127.7(e) is amended as follows:

At the end of the section add the following footnotes:

[2] In those situations where the commuter service is the dominant user, the minority user(s) shall be assigned any charges to these accounts on an actual basis.

[3] The minority user(s) shall pay for units of shop and power plant machinery which could be disposed of if the minority service were discontinued.

[4] On line segments which are owned by a state, local or regional transportation authority, the minority user(s) shall be charged with those property taxes including in lieu of tax payments which would not be incurred in the absence of the minority service(s).

10. Section 1127.7(f)(1)(ii) is amended to read as follows:

(f)(1)(i) * * *

(ii) *Maintenance of Way and Structures—Running Tracks.*

For a designated area, the common costs assigned to these accounts shall be apportioned on the ratio of the commuter service Speed Factored Gross Tons (SFGT) for the designated area to the total SFGT for all traffic in the designated area. Where the commuter service is the minority user, the commuter service SFGT shall be derived by subtracting the SFGT for freight and/or intercity passenger from the total SFGT for all traffic. Where the commuter service is the dominant user, the commuter service SFGT shall be derived as if the commuter service was the only service; the SFGT shall be calculated in accordance with the formula set forth in Appendix III.

11. Section 1127.8 is amended to read as follows:

§ 1127.8 Value of rail properties.

The value of rail properties on which a reasonable return is allowed shall consist of:

(a) The net book value of equipment furnished by the contracting carrier for commuter service, after deduction of accrued depreciation; and

(b) The value of rail properties on which a reasonable return is allowed when the commuter service is the minority user shall consist of the net book value of those roadway and structure properties which are used in commuter service and could be disposed of if the commuter service were discontinued. The net book value shall include the net liquidation value of the properties as of April 1, 1976, determined for their highest and best use for other than rail transportation purposes, plus the value of additions and betterments completed after that date for commuter service. From this amount is subtracted any depreciation accrued from that date and all costs of modifying remaining properties so that non-commuter operations can be continued over them. It shall not include the value of properties owned by public bodies; or of properties owned by the trustees of debtor estates if such properties are entitled to a return computed under 49 CFR 1125.9;

(c) When the commuter service is the dominant user, it shall be entitled to a rate return on the values of properties and equipment which could be disposed of if the minority service(s) were discontinued. The value applied to each line segment shall be the acquisition price paid by the communter authority to Conrail, plus the value of additions and betterments after acquisition for the minority service, less depreciation accrued from the time of acquisition.

(d) If the book values of road or equipment property are adjusted upward or downward as a result of final orders of the special court, such adjusted values shall be reflected in future subsidy payments, but without retroactive effect.

12. Section 1127.9 is amended to read as follows:

§ 1127.9 Reasonable return on the value of the properties.

The reasonable return shall be 7.5 percent per annum on the sum of the appropriate elements of the investment base computed in accordance with section 1127.8. When the commuter authority is the owner, the 7.5 percent annum return represents a charge to the other user(s).

Appendix III [Amended]

13. Footnote one to Appendix III is amended to read as follows:

[1] In calculating total SFGT, the value of N shall reflect the total number of tracks presently in place. Any tracks constituting present excess capacity shall be included in this value of N.

Where the commuter authority is the minority user the value of N, used in calculating SFGT for freight and/or intercity passengers, shall reflect the total number of tracks less the number of tracks (if any) which could be eliminated if commuter service were discontinued. Any tracks constituting present excess capacity shall be included in the value of N when computing SFGT for freight and/or intercity passenger.

Where the commuter authority is the dominant user, the value of N shall reflect the total number of tracks less the number of trucks (if any) which could be eliminated if freight and/or intercity passenger service were discontinued. Any tracks constituting present excess capacity shall be included in the value of N when computing SFGT for commuter service.

[FR Doc. 79-20301 Filed 7-5-79; 8:45 am]
BILLING CODE 7035-01-M

DEPARTMENT OF COMMERCE

National Oceanic and Atmospheric Administration

[50 CFR Part 611]

Foreign Fishing Regulations; Recording of Salmon and Halibut

AGENCY: National Oceanic and Atmospheric Administration/Commerce.

ACTION: Proposed Regulations.

SUMMARY: Regulations are proposed which will require the operator of a foreign vessel in the Gulf of Alaska groundfish fishery or the Bering Sea and Aleutian Islands fishery to record and report the numbers of salmon and halibut discarded.

DATE: Comments are invited until August 6, 1979.

ADDRESS: Comments should be addressed to: Denton R. Moore, Acting Chief, Permits and Regulations Division, National Marine Fisheries Service, Department of Commerce, Washington, D.C. 20235.

FOR FURTHER INFORMATION CONTACT: Harry L. Rietze, Director, Alaska Region, National Marine Fisheries Service, P.O. Box 1668, Juneau, Alaska 99802. Telephone: (907) 586-7221.

SUPPLEMENTARY INFORMATION: Effective management of the fishery resources in the fishery conservation zone off the Alaskan and west coasts requires timely knowledge of both directed and incidental catches of salmon and halibut. The operator of a foreign vessel may not conduct a directed fishery for salmon or halibut and must discard all salmon and halibut caught incidental to other fisheries. The operator of a foreign vessel operating in the Washington, Oregon, and California trawl fishery is required to record and report discards of salmon and halibut. No such requirement has been imposed in the Gulf of Alaska groundfish fishery or the Bering Sea and Aleutian Islands fishery. The Regional Director, Alaska Region, National Marine Fisheries Service, has found that timely data on salmon and halibut discards is necessary for proper management of the fishery resources in these additional fisheries. Accordingly, amendments to the foreign fishing

regulations are proposed which will require the recording and reporting of salmon and halibut discards by foreign vessels in the Gulf of Alaska groundfish fishery and the Bering Sea and Aleutian Islands fishery, as required in the Washington, Oregon, and California trawl fishery.

The Assistant Administrator for Fisheries has determined that these regulations are not significant under Executive Order 12044. Environmental impact statements for the fishery management plans concerned are on file with the Environmental Protection Agency.

Signed at Washington, D.C., this 29th day of June, 1979.

Winfred H. Meibohm,

Executive Director, National Marine Fisheries Service.

1. It is proposed to amend 50 CFR 611.9(d)(4) and (e)(1) to read as follows:

§ 611.9 Reports and record keeping.

* * * * *

(d) * * *

(4) In the Washington, Oregon, and California trawl fishery, the Gulf of Alaska groundfish fishery, and the Bering Sea and Aleutian Islands fishery, record in addition to allocated species, the prohibited species salmon (species code 210) and halibut (species code 722) which are discarded, in terms of the number of fish.

(e) * * *

(1) Each foreign nation shall submit, through the designated representative, a weekly report stating, on a vessel-by-vessel basis, except as otherwise provided in § 611.90(e)(2), the catch in round weight of the species allocated to that nation, for the weekly period Sunday through Saturday, Greenwich mean time. In the Washington, Oregon, and California trawl fishery, the Gulf of Alaska groundfish fishery, and the Bering Sea and Aleutian Islands fishery, in addition to allocated species, catch of salmon and halibut in number of fish shall be reported.

* * * * *

2. It is proposed to amend 50 CFR 611.9, Appendix IV A 7 and 8 to read as follows:

Appendix IV—Weekly Catch Report

A. * * *

7. Species: Enter the code from Appendix I for each allocated species caught during the reporting period. In addition, in the Washington, Oregon, and California trawl fishery, the Gulf of Alaska groundfish fishery, and the Bering Sea and Aleutian Islands fishery enter the species code 210 for salmon and the species code 722 for halibut.

8. Catch: Enter the round weight, to the nearest tenth of a metric ton (0.1 m.t.), by species and area, of allocated species caught during the reporting period, regardless of whether retained or discarded. In addition, in the Washington, Oregon, and California trawl fishery, the Gulf of Alaska groundish fishery, and the Bering Sea and Aleutian Islands fishery, for salmon and halibut enter *number of fish* discarded.

* * * * *

(16 U.S.C. Section 1801 *et seq.*)

[FR Doc. 79-20772 Filed 7-5-79; 8:45 am]

BILLING CODE 3510-22-M

Notices

Federal Register
Vol. 44, No. 131
Friday, July 6, 1979

This section of the FEDERAL REGISTER contains documents other than rules or proposed rules that are applicable to the public. Notices of hearings and investigations, committee meetings, agency decisions and rulings, delegations of authority, filing of petitions and applications and agency statements of organization and functions are examples of documents appearing in this section.

DEPARTMENT OF AGRICULTURE

Agriculture Stabilization and Conservation Service

Proposed Determinations With Regard to the 1980 Wheat, Barley, Rye and Oats Programs and the Special Wheat Acreage Grazing and Hay Program

AGENCY: Agricultural Stabilization and Conservation Service.

ACTION: Shortening Comment Period on Proposed Determinations.

SUMMARY: On June 5, 1979, a notice was published in the Federal Register (44 FR 32257) that the Secretary of Agriculture proposed to make certain determinations with respect to the 1980 crops of wheat, barley and oats. Due to changed circumstances, the comment period is being shortened in order that these determinations may be made at an earlier date.

DATE: Comments must be received on or before July 16, 1979.

ADDRESS: Mr. Jeffress A. Wells, Director, Production Adjustment Division, ASCS, USDA, Room 3630, South Building, P.O. Box 2415, Washington, D.C. 20013.

FOR FURTHER INFORMATION CONTACT: Bruce R. Weber (ASCS) (202) 447-6688.

SUPPLEMENTARY INFORMATION: The notice published on June 5, 1979, requested comments with respect to the following 1980-crop program determinations:

(a) Whether barley and oats should be included in the 1980 feed grain program and whether program provisions for barley and oats should be announced concurrently with the wheat announcement; (b) the amount of the 1980 national program acreages; (c) the reduction from previous year's harvested acreage required to guarantee established (target) price protection on the total 1980 planted acreage; (d) whether there should be a set-aside requirement and, if so, the extent of such set-aside; (e) if a set-aside or land diversion program is required, whether a limitation should be placed on planted acreage; (f) whether there should be a land diversion program and, if so, the extent of such diversion and the level of payment; (g) the loan and purchase levels for 1980 crops of wheat, barley, oats and rye; (h) the established (target) prices for wheat, barley and oats; (i) whether the special wheat acreage grazing and hay program should be implemented; and (j) other related provisions. Most of the above determinations for wheat are required to be made by the Secretary on or before August 15, 1979, in accordance with provisions in section 107A and 109 of the Agricultural Act of 1949, as amended, and section 1001 of the Food and Agriculture Act of 1977, as amended.

The June 5 notice provided that written comments must be received on or before August 6, 1979, in order to be considered.

Problems are currently being encountered in truck and rail transportation in the United States as well as in some other major exporting countries. In addition, there is uncertainty about future availability of diesel and other fuels as well as other inputs derived from petrochemicals. These problems and uncertainties, coupled with an expanding worldwide demand for grains and feedstuffs and a deterioration of crop prospects in certain important areas, notably the Soviet Union and Eastern Europe, make it important that farmers know 1980 program provisions as early as possible so that they can make plans and decisions accordingly.

Although Executive Order 12044 (43 FR 12661) requires at least a 60 day public comment period on proposed significant regulations, exceptions may be made when the Agency determines that this is not possible or not in the public interest. It is hereby found and determined that compliance with the 60-day public comment period is contrary to the public interest. Accordingly, the comment period is shortened to July 16, 1979.

Comments will be made available for public inspection at the Office of the Director during regular business hours (8:15 a.m. to 4:45 p.m.).

The proposed determination as outlined in 44 FR 32257 has been reviewed under the USDA criteria established to implement Executive Order 12044, "Improving Government Regulations," and has been classified "significant." An approved Draft Impact Analysis is available from Bruce R. Weber (ASCS) 202-447-6688.

Signed at Washington, D.C. on July 3, 1979.

John W. Goodwin,

Acting Administrator, Agricultural Stabilization and Conservation Service.

[FR Doc. 79-20994 Filed 7-3-79; 12:32 pm]
BILLING CODE 3410-05-M

Rural Electrification Administration

Sunflower Electric Cooperative, Inc.; Draft Environmental Impact Statement

Notice is hereby given that the Rural Electrification Administration has prepared a Draft Environmental Impact Statement in accordance with Section 102(2)(C) of the National Environmental Policy Act of 1969, in connection with the proposed use of REA guaranteed loan funds by Sunflower Electric Cooperative, Inc., Hays National Bank Building, Hays, Kansas 67601, to finance the construction of proposed transmission facilities in the State of Kansas. The transmission facilities covered by this statement include the construction of approximately 70 miles of 345 kV transmission line from Holcomb, Kansas, to Spearville, Kansas, and a new substation south of Holcomb, Kansas. In addition, this statement includes Sunflower's installation of a bay, transformer and associated equipment in a substation at Spearville, Kansas, which is to be constructed and financed by the Western Power Division of the Central Telephone and Utilities Corporation.

Additional information may be secured on request submitted to Mr. Joe S. Zoller, Assistant Administrator—Electric, Rural Electrification Administration, U.S. Department of Agriculture, Washington, D.C. 20250. Comments are particularly invited from State and local agencies, which are authorized to develop and enforce environmental standards, and from Federal agencies having jurisdiction by law or special expertise with respect to

any environmental impact involved from which comments have not been requested specifically.

Copies of the REA Draft Environmental Impact Statement have been sent to various Federal, State and local agencies, as outlined in the Council on Environmental Quality Guidelines. The Draft Environmental Impact Statement may be examined during regular business hours at the offices of REA in the South Agriculture Building, 12th Street and Independence Avenue, S.W., Washington, D.C., Room 1268, or at Sunflower's address indicated above.

Comments concerning the environmental impact of the construction proposed should be addressed to Mr. Zoller at the address given above. Comments must be received on or before September 4, 1979, to be considered in connection with the proposed action.

Final REA action, with respect to this matter (including any release of funds), will be taken only after REA has reached satisfactory conclusions, with respect to its environmental effects and after procedural requirements set forth in the National Environmental Policy Act of 1969, have been met.

Dated at Washington, D.C. this 27th day of June, 1979.

Robert W. Feragen,

Administrator, Rural Electrification Administration.

[FR Doc. 79-20816 Filed 7-5-79; 8:45 am]

BILLING CODE 3510-15-M

CIVIL AERONAUTICS BOARD

[Docket 32947; Order 79-6-184]

Wright Air Lines, Inc.; Order To Show Cause; Application for Control and Interlocking Relationships

Adopted by the Civil Aeronautics Board at its office in Washington, D.C. on the 28th day of June, 1979.

In the matter of application of Wright Air Lines, Inc., Air Cleveland, Inc., Garsco, Inc., M. J. Garrihy, Velva Garrihy, Gilbert Singerman, Gayle Singerman for approval of control and interlocking relationships under sections 408 and 409 of the Act.

By application filed June 30, 1978, as amended April 23, 1979, Wright Air Lines, Inc. (Wright), Air Cleveland, Inc. (ACI), Garsco, Inc. (Garsco), M. J. Garrihy, Velva Garrihy,[1] Gilbert Singerman, and Gayle Singerman [2] request that the Board approve under or exempt from section 408 of the Act the acquisition of control of Wright by certain shareholders of Garsco [3] and the merger of ACI and Garsco into Wright and to approve under section 409 of the Act, the interlocking relationships resulting from these transactions. Basically, Wright proposes to acquire all of the outstanding capital stock of Garsco, and, in return, will issue to the shareholders of Garsco 50% plus one share of its outstanding common stock. Wright will exhange ten shares of its stock for each share of ACI stock.[4] Wright will be the sole surviving corporation.

The Applicants

Wright is a certificated route air carrier based at Burke Lakefront Airport, Cleveland, Ohio.[5] It operates mainly between the downtown airports of Cleveland and Detroit, recently received certificate authority for a Cleveland-Indianapolis route, and holds exemption authority to operate between Cleveland and the Port Columbus Airport in Columbus, Ohio. More recently, it received authority to operate between Cleveland and Cincinnati. It operates four Convair CV-600 aircraft, which it leases from Garsco.

Air Cleveland is an 80% owned subsidiary of Wright. It was formed by Wright for the purpose of acquiring and operating assets consisting of leasehold improvements (a hangar and fuel farm) and a fixed base operation at Burke Lakefront Airport.[6]

Garsco's sole function is to acquire, lease, and hold for sale five Convair CV-600 aircraft and related engines and parts. As stated before, four of these aircraft are leased to Wright, and the applicants state that they anticipate that the fifth will be sold.

M. J. Garrihy has been a consultant to Wright, without compensation, since 1975 and has managment control of Wright. He is Chairman of the Board, President, Chief Executive Officer, a director and a 40.25% shareholder of Midwest Charter Express, Inc., a holding company for Midwest Air Charter, Inc., a section 418 all-cargo air carrier. Mr. Garrihy is the President and a director of Midwest Air Charter, and he also is President, Treasurer, a director and 45% shareholder of Midwest Aviation, Inc., a fixed base operation at Lorain County Airport, and an officer, and director of Aero Leasing, Inc., a corporation made up of 15 Aero Leasing companies, each of which owns and leases one or two aircraft to Midwest Air Charter. Aero Leasing is also a subsidiary of Midwest Charter Express.

His wife, Velva Garrihy, is the Secretary and Vice President, a director, and 47% shareholder of Garsco.

Gilbert Singerman is the President and a director of ACI. He is also the President and Treasurer, a director, and 24% shareholder of Garsco. Furthermore, he is an officer and a director of Midwest Air Charter, Vice President, a director, and a 40.25% shareholder of Midwest Charter Express, Vice President, Secretary, a director and a 45% shareholder of Midwest Aviation, and an officer, a director, and the sole owner of Aerostar of Cleveland. Aerostar owns one aircraft but it is unrelated to the other companies described here.

His wife, Gayle Singerman, is a director and 23% shareholder of Garsco.[7]

Position of the Applicants

The applicants state that as a result of four consecutive years of operating losses experienced by Wright from 1972 to 1975, Wright is in default on an approximate $1.7 million debt owed to its principal lender, the Union Commerce Bank of Cleveland (Union Commerce), and, its financial situation is critical. They advise that, in consultation with Union Commerce, Wright has taken steps to reverse its operating deficits and return the company to a sound financial footing. The proposed acquisition and merger are essential to achieving this objective.[8]

Under the terms of the Wright/Garsco shareholders agreement, Wright will acquire all of the common stock of Garsco. In exchange, Wright will issue to the Garsco shareholders that number of shares of its common stock as will on the closing date be equal to 50% plus one share of the Wright common stock outstanding, or, approximately 48.8% of the outstanding voting stock of Wright.[9]

[1] M. J. and Velva Garrihy will sometimes jointly be referred to as the Garrihys.

[2] Gilbert and Gayle Singerman will sometimes jointly be referred to as the Singermans.

[3] The following people hold all of the outstanding stock of Garsco in the proportions specified: Velva Garrihy 47%; Gayle Singerman 23%; Gilbert Singerman 24%; L. S. Fishman 3%; Lawrence I. Byrnes 3%.

[4] The agreements between Wright and the Garsco shareholders, and Wright and Air Cleveland are contained in the application.

[5] Wright is a publicly held corporation. The applicants advise that only one person, Mr. Donald R. Schneller, a director of Wright, holds more than 10% of the voting securities. He and his wife together holds 37% of the common shares of Wright.

[6] By Orders 75-5-57 and 75-7-124 the Board exempted Wright from section 408 of the Act to the extent necessary to permit its control of ACI. Frank A. Ragone, Jr. is the remaining 20% shareholder of ACI.

[7] The Garrihys' and Singermans' relationships with these companies are summarized in Appendix I.

[8] Additional steps include the engaging of Mr. Garrihy as a consultant and the leasing of larger aircraft from Garsco.

[9] The applicants state that certain preferred shares have voting rights.

Wright will be the sole surviving corporation and will obtain title to the four CV-600 aircraft that it is now leasing from Garsco. In addition to Board approval, the agreement is subject to approval by the Wright shareholders. The applicants advise that consummation of the acquisition will likely constitute a change in control of Wright.[10] Under the terms of the Wright/ACI agreement, ACI will be merged into Wright and Wright will be the sole surviving corporation. Each shareholder of ACI will receive 10 shares of Wright's common stock in exchange for one share of ACI's.[11] Wright will acquire all assets of Air Cleveland.

The applicants advise that if the proposed agreements are effected, Union Commerce has agreed to consolidate and refinance on more favorable terms the outstanding debts of Wright, ACI, and Garsco.[12] All property of the three companies in which security interests can be granted will be pledged as security for the new bank financing. The applicants suggest that this reorganization will enable Wright to cure its loan default and help it remain current on the outstanding debt.[13]

We have received no comments on this application.

Tentative Findings and Conclusions

We have tentatively concluded that the merger of Garsco and ACI into Wright and the acquisition of control of Wright by the Garrihys and the Singermans, resulting in common control on the one hand of Wright, and on the other hand of Midwest Charter Express, including its subsidiaries Midwest Air Charter and Aero Leasing, Midwest Aviation and Aerostar of Cleveland should be approved.[14]

The Airline Deregulation Act of 1978, Pub. L. 95-504, directs the Board to place maximum reliance on market forces and on actual and potential competition. Approval of these transactions causes us little concern on this basis. As to Wright and Midwest Air Charter, our policy has been established under Part 291. That rule affords a blanket exemption to an initial common control relationship between an all-cargo carrier and a passenger air carrier. The common control of an all-cargo carrier and a passenger air carrier is not inherently anticompetitive and we believe that the policy of Part 291 is applicable to the Wright/Midwest Air Charter relationship.

The proposed acquisition will also result in common control by the Garrihys and Singermans of Wright and various aircraft lessors. Common control of certificated carriers and aircraft lessors does not raise issues new to the Board. The Board has expressly permitted such control from time to time and has more recently declined to require that such preexisting relationships be terminated upon initial certification of carriers.[15] Such common control relationships have been found not to pose any anticompetitive threat.[16] As the applicants have not requested antitrust immunity, exemption from the antitrust laws will not be given. In the event that our assessment is incorrect, our action will not bar future prosecution under the antitrust laws.[17]

We tentatively conclude that the proposed mergers and acquisitions of control described above[18] will not result in a monopoly, or be in furtherance of a combination or conspiracy to monopolize or to attempt to monopolize the business of air transportation in any region of the United States; will not substantially lessen competition, tend to create a monopoly or to otherwise restrain trade in any region of the United States; and will not be otherwise inconsistent with the public interest; that exemption from the antitrust laws for these transactions is not required in the public interest; and that except to the extent granted all other requests in this docket should be dismissed.

Applicants also seek approval under section 409 of any interlocking relationships arising out of the mergers and acquisition of control. These interlocking relationships are, however, subject to the exemption and approval of sections 287.3 and 287.4 of the Board's Economic Regulations and accordingly upon issuance of a final order no further relief will be necessary.

We further tentatively conclude that show-case procedures should be used to grant the necessary approvals. As we read the Airline Deregulation Act, the approval provisions of section 408 should not be invoked where to do so may result in undue expense and delay in the implementation by businesses of decisions they believe to be in their best interests where we have found no countervailing anticompetitive potential.[19] Furthermore, no one has objected to this application, nor do there appear to be any issues of fact that require a full evidentiary hearing for their resolution. Also, it appears that Wrigth's financial situation is critical and an opportunity is presented for its rehabilitation. Therefore, we will direct all interested persons to show cause why the tentative findings, conclusions, and proposed approval should not be made final.[20]

Accordingly, 1. We direct all interested persons to show cause why we should not make final our tentative findings and conclusions and issue an order that would:

a. Approve the mergers of Garsco into Wright and ACI into Wright as described more fully before; and

b. Approve the acquisition of control of Wright by M. J. Garrihy, Velva Garrihy, Gilbert Singerman, and Gayle Singerman and the resulting common control relationships that follow from them, as described more fully before;

2. Any person disclosing a substantial interest in our proposed approvals and supporting or objecting to our issuing an order making final our tentative findings and conclusions, or desiring the

[10] The Garsco shareholders will receive Wright stock in proportion to their stock holdings in Garsco.

[11] ACI is authorized to issue and has outstanding 500 shares of no par common stock. Thus, the ACI shareholders will receive 5,000 of the 2,730,000 shares of no par common stock that Wright is authorized to issue.

[12] Air Cleveland has a loan from Union Commerce for the purchase of its Burke Lakefront Airport facilities, and Garsco has a loan from that bank for the purchase of five CV-600 aircraft.

[13] The applicants represent that this will have none of the effects set forth in section 312.9(a)(2) of the Board's Regulations because no new or different air service will result.

[14] The application discloses certain transactions that may have taken place in violation of section 408. Although we have concluded that these violations are not so severe as to preclude consideration on the merits at this time, our action here does not preclude subsequent enforcement action. (See Swift International Forwarders, Inc., Order 76-12-84, December 14, 1976.)

[15] For example, *F.G.H. Financial Corporation Stock Acquisition of McCulloch International Airlines, Inc.*, Order 75-8-150, July 31, 1975. *Flying Tiger Lines Inc.*, 71-6-106, June 21, 1971, and *Continental Aircraft Services, Inc., Order 77-3-81, March 15, 1977, and Mackey Certification Proceeding*, Order 78-7-107, June 1, 1978.

[16] See Orders 75-8-150 and 77-3-81, *supra*.

[17] We will, moreover, retain jurisdiction to take such further action as the public interest may require.

[18] As a result of the proposed merger, the Union Commerce Bank of Cleveland will hold security interests in all property of the companies of which such interests can be granted. Our decision here does not constitute a finding as to whether the bank will acquire control of Wright as a result of its security holdings. This relationship should be illuminated by our findings in the *Institutional Control of Air Carriers Investigation*, Docket 26348, and we will retain jurisdiction in this case and the right to amend or alter this decision in light of any final decision reached in that docket.

[19] Since our proposed approval in this case would not result in any substantial change in the level of existing air service, we tentatively find that our action is not a major Federal action significantly affecting the quality of the human environment within the meaning of the National Environmental Policy Act of 1969, nor a major regulatory action within the meaning of the Energy Policy and Conservation Act of 1975.

[20] We anticipate such persons will support their objections with detailed answers specifically setting forth the tentative findings and conclusions to which they object. Persons supporting approval are similarly expected to document their positions.

imposition of conditions upon approval, shall file comments with us within 14 days of the date of service of this order; and

3. A copy of this order shall be served upon the United States Attorney General and Secretary of Transportation.

This order shall be published in the Federal Register.

By the Civil Aeronautics Board.[21]

Phyllis T. Kaylor,

Secretary.

[FR Doc. 79-20909 Filed 7-5-79; 8:45 am]

BILLING CODE 6320-01-M

[21] All members concurred.

Appendix I

TABLE OF CONTROL AND INTERLOCKING RELATIONSHIPS

	Wright 1/	Garsco 2/	Air Cleveland 3/	Midwest Air Charter 4/	Midwest Aviation 5/	Midwest Charter Express 6/	Aero Leasing 4/	Aerostat of Cleveland 7/
M.J. Garrihy	Consultant, having management control.			Chairman of the Board, President, Chief Executive Officer, Director	President, Treasurer, Director	President, Director	Officer, Director	
Velva Garrihy		Secretary, Vice President, Director		Director				
Gilbert Singerman		President, Treasurer, Director	President, Director	Officer, Director	Vice President, Secretary, Director	Vice President, Director	Officer, Director	Sole owner - operator
Gayle Singerman		Director		Director				

1/ Publicly held. After consummation of the transaction, Mrs. Garrihy will own 22.9% of voting stock, Mrs. Singerman 11.2%, and Mr. Singerman 11.7%.
2/ Currently controlled by the Garrihys and Singermans. To be merged into Wright.
3/ Currently owned 80% by Wright and 20% by Frank A. Ragone, Jr. To be merged into Wright.
4/ Wholly owned subsidiaries of Midwest Charter Express.
5/ Controlled by Mr. Garrihy and Mr. Singerman who each own 45%.
6/ Controlled by Mr. Garrihy and Mr. Singerman who each own 40.25%.
7/ Sole owner is Mr. Singerman.

BILLING CODE 6320-01-C

DEPARTMENT OF COMMERCE

Foreign-Trade Zones Board

[Docket No. 7-79]

Proposed Foreign-Trade Zone, Tulsa Port of Catoosa, Rogers County, Okla.; Application Filed/Public Hearing Scheduled

Notice is hereby given that an application has been submitted to the Foreign-Trade Zones Board (the Board) by the City of Tulsa-Rogers County Port Authority (the Port Authority), a public corporation of the State of Oklahoma, requesting authority to establish a general-purpose foreign-trade zone within the Tulsa Port of Catoosa, 15 miles east of the City of Tulsa, in Rogers County. Oklahoma, within the Tulsa Customs port of entry. The application was submitted pursuant to the provisions of the Foreign-Trade Zones Act of 1934, as amended (19 U.S.C. 81a–81u) and the Regulations of the Board (15 CFR Part 400). It was formally filed on June 29, 1979. The applicant is authorized to make this proposal under Section 1106(g) of Title 82, Oklahoma Statutes.

The proposal calls for the establishment of a general-purpose zone on a 112-acre tract within the 2,000-acre port terminal and industrial park of the Tulsa Port of Catoosa in Rogers County, at the head of navigation on the Verdigris River portion of the Arkansas River Navigation System. The zone would operate as part of the Port Authority's terminal operations and would be initially activated at one of the existing warehouse/processing structures on the Port channel.

The application contains economic data and information concerning the need for a zone in the Tulsa area. Several firms have expressed an interest in using the proposed zone. Among the initial zone users will be firms involved with the storage and distribution of such products as decorative fabrics, commerical fasteners and cranes, and the assembly and manufacture of items including bicycles and automotive catalytic converters.

In Accordance with the Board's regulations, an examiners committee has been appointed to investigate the application and report thereon to the Board. The committee consists of: Hugh J. Dolan (Chairman), Office of the Secretary, U.S. Department of Commerce, Washington, D.C. 20230; Ernest J. Gonsoulin, Director (Inspection and Control), Region VI, U.S. Customs Service, 500 Dallas Street, Suite 1240, Houston, Texas 77002; and Colonel Robert G. Bening, District Engineer, U.S. Army Engineer District Tulsa. P.O. Box 61, Tulsa, Oklahoma 74121.

As part of its investigation, the Examiners Committee will hold a public hearing on August 15, 1979, beginning at 9:00 a.m., in Room 211 of the Old Federal Building, 224 South Boulder, Tulsa, Oklahoma. The purpose of the hearing is to help inform interested parties about the proposal, to provide an opportunity for their expression of views, and to obtain information useful to the examiners.

Interested parties are invited to present their views at the hearing. They should notify the Board's executive secretary of their desire to be heard in writing at the address below or by phone (202/377–2862) by August 8, 1979. Instead of an oral presentation, written statements may be submitted in accordance with the Board's regulations to the examiners committee, care of the executive secretary, at any time from the date of this notice through September 14, 1979. Evidence submitted during the post-hearing period is not desired unless it is clearly shown that the matter is new and material and that there are good reasons why it could not be presented at the hearing. A copy of the application and accompanying exhibits will be available during this time for public inspection at each of the following locations:

Office of the Port Director, U.S. Customs Service, Tulsa International Airport, Tulsa, Oklahoma 74115.

Office of the Executive Secretary, Foreign-Trade Zones Board, U.S. Department of Commerce, Room 6886–B, 14th and E Streets, NW., Washington, D.C. 20230.

Dated: June 29, 1979.

John J. Da Ponte, Jr.,

Executive Secretary.

[FR Doc. 79-20249 Filed 7-5-79; 8:45 am]

BILLING CODE 3510-25-M

Industry and Trade Administration

[Amendment No. 3, 47-1; Reference 401, 10-3]

Bureau of International Economic Policy and Research

Effective: June 8, 1979.

ITA Organization and Function Order 47–1 of December 4, 1977, as amended, (43 FR 12056, 43 FR 29344, 44 FR 31689) is hereby further amended as follows to reflect the establishment of the Japan Division.

1. SECTION 7. OFFICE OF COUNTRY AFFAIRS.

is revised to read:

SECTION 7. Office of Country Affairs.

.01 The *Office of the Director* includes the *Director* who shall be responsible for developing and implementing the Department's position on economic and commercial relations with individual countries and regional economic grouping (except those countries that are the responsibility of the Bureau of East-West Trade); advise and provide support for Secretarial officers; represent the Department at international meetings concerned with country or regional matters and on interagency bodies in the U.S. Government established to deal with these matters; prepare analyses of country and regional economic trends and developments, including foreign national industrial policies which impact on U.S. trade ad investment; analyze and comment on relevant legislative proposals; make and maintain appropriate contacts as required to further U.S. country and regional economic interests and carry out other appropriate activities. The Office shall consist of the following organizational components.

.02 The *Industrialized Nations Division* shall develop and coordinate the Department's position on bilateral and regional economic and commercial issues regarding the following countries and regions: Canada, Australia, New Zealand, the European Community and other countries of Western Europe; advise Secretarial officers regarding their meetings and other contracts with policy-level representatives of these countries and regional groups, and provide needed support for such meetings; develop recommendations on the Department's position on bilateral and regional economic and commercial issues arising in international organizations concerned with such issues and represent the Department, as appropriate, in interdepartmental discussions relating to meetings of these organizations; initiate and pursue, through the Foreign Service of the United States and other appropriate channels, representations on behalf U.S. business interests for the furtherance of these interests; undertake special studies and analyses related to the formulation of U.S. economic and commercial policies with Canada, Australia, New Zealand, the European Community and other countries of Western Europe; represent the Department at interagency meetings dealing with such country or regional matters; and carry out similar functions

with respect to other projects as may be assigned.

.03 The *Developing Nations Division* shall develop and coordinate the Department's position on bilateral and regional economic and commercial issues regarding all individual countries and regions other than those specifically handled within the Industrialized Nations Division and the Japan Division; advise Secretarial officers regarding their meetings and other contacts with policy-level representatives of these countries and regional groups, and provide needed support for such meetings; develop recommendations on the Department's position on bilateral and regional economic and commercial issues arising in international organizations concerned with such issues and represent the department, as appropriate, in interdepartmental discussions relating to meetings of these organizations; initiate and pursue, through appropriate channels, representations on behalf of U.S. business interests for the furtherance of these interests; undertake special studies and analyses related to the formulation of U.S. positions regarding economic and commercial policies with these countries; represent the Department at interagency meetings dealing with such country or regional matters; and carry out similar functions with respect to other projects as may be assigned.

.04 The *Japan Division* shall develop and coordinate the Department's position on bilateral economic and commercial issues regarding Japan; advise Secretarial officers regarding their meetings and other contacts with policy-level representatives of Japan and provide needed support for such meeting; initiate and pursue, through appropriate channels, representations on behalf of U.S. business interests in Japan; undertake special studies and analyses related to the formulation of U.S. positions regarding economic and commercial policies toward Japan; represent the Department at interagency meetings dealing with Japanese economic and commercial matters; and carry out similar functions with respect to other projects as may be assigned. In addition, the Division shall provide the U.S. staff for the *Joint U.S.-Japan Trade Facilitation Committee;* identify and evaluate, in consultation with individual U.S. firms, trade associations, and other interested offices of the Department of Commerce, specific difficulties concerning Japanese trade practices or procedures encountered by companies in initiating or expanding their sales to the Japanese market; document and prepare such special cases for submission to the Trade Facilitation Committee and follow up on the Committee's handling of cases after submission; and propose, support, and follow up other appropriate activities of the Trade Facilitation Committee.

2. The organization chart attached to this amendment supersedes the organization chart dated June 1978.[1]

Frank A. Weil,

Assistant Secretary for Industry and Trade.

Abraham Katz,

Deputy Assistant Secretary for International Economic Policy and Research.

[FR Doc. 79-20749 Filed 7-5-79; 8:45 am]

BILLING CODE 3510-25-M

[1] Filed as part of the original document.

Maritime Administration

Request for Removal, Without Disapproval, From Roster of Approved Trustees

Notice is hereby given, pursuant to 46 CFR 221.28, that National Bank of North America, with offices at 80 Pine Street, New York, New York, has requested removal, without disapproval, from the Roster of Approved Trustees. In its request for removal, National Bank of North America certified that it is no longer acting or proposing to act as Trustee under a Vessel or Shipyard Financing Trust pursuant to Public Law 89-346 and 46 CFR 221.21-221.30.

Dated: June 29, 1979.

James S. Dawson, Jr.,

Secretary.

[FR Doc. 79-20928 Filed 7-5-79; 8:45 am]

BILLING CODE 3510-15-M

National Oceanic and Atmospheric Administration

Gulf of Mexico and South Atlantic Fishery Management Councils' Coral Advisory Subpanel and Scientific and Statistical Committee; Public Meetings

AGENCY: National Marine Fisheries Service, NOAA.

SUMMARY: The Gulf of Mexico and South Atlantic Fishery Management Councils were established by Section 302 of the Fishery Conservation and Management Act of 1976 (Public Law 94-265), and the Councils have established a Coral Advisory Subpanel (AP) and a Scientific and Statistical Committee (SSC) which will meet to review a draft fishery management plan (FMP) on corals.

DATES: The AP will meet on Monday, July 30, 1979, from 9:30 a.m. to 5 p.m. and the SSC will meet on Tuesday, July 31, 1979, from 8:30 a.m. to approximately 5 p.m. The meetings are open to the public.

ADDRESS: The meetings will take place in the Holiday Room of the Holiday Motor Hotel, I-75, at I-285, Hapeville, Georgia.

FOR FURTHER INFORMATION CONTACT: Gulf of Mexico Fishery Management Council, Lincoln Center, Suite 881, 5401 West Kennedy Boulevard, Tampa, Florida 33609, Telephone: (813) 228-2815.

Dated: June 29, 1979.

Winfred H. Meibohm,

Executive Director, National Marine Fisheries Service.

[FR Doc. 79-20751 Filed 7-5-79; 8:45 am]

BILLING CODE 3510-22-M

Pacific Fishery Management Council's Billfish Subpanel; Public Meeting

AGENCY: National Marine Fisheries Service, NOAA.

SUMMARY: The Pacific Fishery Management Council was established by Section 302 of the Fishery Conservation and Management Act of 1976 (Pub. L. 94-265), and the Council has established a Billfish Subpanel which will meet to discuss the draft billfish fishery management plan.

DATES: The meeting will convene on Friday, July 20, 1979, at approximately 10 a.m., and will adjourn at approximately 5 p.m. The meeting is open to the public.

ADDRESS: The meeting will take place at the California Fish and Game Office, 350 Golden Shores, Long Beach, California.

FOR FURTHER INFORMATION CONTACT: Pacific Fishery Management Council, 526 S.W. Mill Street, Second Floor, Portland, Oregon 97201, Telephone: (503) 221-6352.

Dated: June 29, 1979.

Winfred H. Meibohm,

Executive Director, National Marine Fisheries Service.

[FR Doc. 79-20750 Filed 7-5-79; 8:45 am]

BILLING CODE 3510-22-M

Pacific Fishery Management Council's Scientific and Statistical Committee; Public Meeting With Partially Closed Session

AGENCY: National Marine Fisheries Service, NOAA.

SUMMARY: The Pacific Fishery Management Council and its Scientific and Statistical Committee will conduct a series of meetings.

DATES: August 8-10, 1979.

ADDRESS: The meetings will take place at Le Baron Hotel, 1350 N. First Street, San Jose, California.

FOR FURTHER INFORMATION CONTACT: Pacific Fishery Management Council, 526 S.W. Mill Street, Second Floor, Portland, Oregon 97201, Telephone: (503) 221-6352.

SUPPLEMENTARY INFORMATION: The Pacific Fishery Management Council was established by Section 302 of the Fishery Conservation and Management Act of 1976 (Public Law 94-265), and the Council has established a Scientific and Statistical Committee to assist in carrying out its responsibilities.

Meeting Agendas follow:

Scientific and Statistical Committee (SSC) (open meeting) August 8-9, 1979, (1 p.m. to 5 p.m. on August 8; 10 a.m. to 5 p.m. on August 9).

Agenda: Discuss fishery management plans (FMP's) under development, hold a public comment period beginning at 3:30 p.m. on August 8, and conduct other Committee business.

Council (open meeting) August 9-10, 1979, (10 a.m. to 5 p.m. on August 9; 8 a.m. to 5 p.m. on August 10).

Agenda: Open Session—Review of FMP's; conduct other fishery management business, and hold a public comment period beginning at 4 p.m. on August 9.

Council (partially closed session) August 9. (8 a.m. to 10 a.m.).

Agenda: Closed Session—Discuss the status of current maritime boundary and resource negotiations between the U.S. and Canada and discuss personnel matters concerning appointments to vacancies on subpanels and teams. Only those Council members, SSC members, and related staff having security clearances will be allowed to attend this closed session.

The Assistant Secretary for Administration of the Department of Commerce, with the concurrence of its General Counsel, formally determined on June 20, 1979, pursuant to Section 10(d) of the Federal Advisory Committee Act, that the agenda items covered in the closed session may be exempt from the provisions of the Act relating to open meetings and public participation therein, because items will be concerned with matters that are within the purview of 5 U.S.C. 552B(c)(1), as specifically authorized under criteria established by an executive order to be kept secret in the interests of national defense or foreign policy and (6), as information which is properly classified pursuant to Executive order and as information of a personal nature where disclosure would constitute a clearly unwarranted invasion of personal privacy. (A copy of the determination is available for public inspection and copying in the Central Reference and Records Inspection Facility, Room 5317, Department of Commerce.) All other portions of the meeting will be open to the public.

Dated: June 29, 1979.

Winfred H. Meibohm,

Executive Director, National Marine Fisheries Service.

[FR Doc. 79-20752 Filed 7-5-79; 8:45 am]
BILLING CODE 3510-22-M

Proposal To Designate a Marine Sanctuary Around the Channel Islands Off California—Availability of Funds for Public Participation

AGENCY: Office of Coastal Zone Management ("OCZM"), National Oceanic and Atmospheric Administration, Department of Commerce.

ACTION: Notice.

SUMMARY: Pursuant to Title III of the Marine Protection, Research and Sanctuaries Act of 1972, 16 U.S.C. 1431-1434, OCZM is considering the designation of certain waters off the Coast of California, adjacent to the Northern Channel Islands, as a marine sanctuary. It is anticipated that a DEIS discussing this proposal will be published in August 1979 and a hearing held in Santa Barbara in September 1979.

In order to promote a full and fair determination of the issues involved, OCZM is making available $5,000 to compensate persons eligible under the criteria set forth in NOAA regulations (15 CFR Part 904) for their participation in this proceeding.

DATES: Closing date for the receipt of applications for compensation is July 31, 1979.

FOR FURTHER INFORMATION CONTACT: JoAnn Chandler, Director, or Nancy Foster, Assistant, Sanctuaries Program, Office of Coastal Zone Management, 3300 Whitehaven Street NW., Washington, D.C. 20235, 202-634-4236.

SUPPLEMENTAL INFORMATION: History of Proposal: In 1977 NOAA received several recommendations that waters surrounding and near the Northern Channel Islands should be designated as a marine sanctuary, the recommendations varying somewhat as to the actual boundary. A public meeting was held in April 1978 to discuss these recommendations and a nomination was received in June 1978.

An Issue Paper was prepared and issued in December 1978 outlining alternative proposals for public review. Based on the responses to this paper, and consultation with other Federal agencies, the Pacific Regional Fishery Management Council, State and local governments and interest groups, NOAA is preparing a draft environmental impact statement on which public comment will be solicited. NOAA anticipates holding a public hearing in Santa Barbara, California in September 1979, to receive comments on the proposal and on the DEIS. The exact time of the hearing will depend on the date the DEIS is published.

Issues Involved: The basic issues which will be analyzed by the DEIS and considered at the public hearing are:

—What conservation, recreational, ecological and esthetic resources are found in the general area under consideration?

—Is designation of a marine sanctuary necessary to protect and manage these resources?

—What size should a marine sanctuary be?

—What regulatory and other measures should be taken within a sanctuary to ensure protection and proper management?

Available Fund: A total fund of $5,000 is available to compensate eligible applicants. This fund may be distributed among one or more applicants, or, at the discretion of the Administrator, not distributed at all.

Eligible Persons: In accordance with the criteria of 15 CFR 904.3, persons who represent an interest the representation of which can reasonably be expected to contribute substantially to a fair determination of the issues described above may be eligible for compensation from these funds. In determining eligibility and the amount of compensation, the Administrator may take into account:

(a) Whether the interest will be adequately represented otherwise;

(b) The need to encourage participation by segments of the public who may have little economic incentive to participate;

(c) The importance of the representation to a fair balance of interests;

(d) The number and complexity of the issues presented;

(e) The importance of public participation;

(f) The applicant's resources available for participation.

Eligible Costs: The Administrator may compensate eligible persons for some or all of the reasonable costs incurred in participating including:

(1) Salaries for participants or employees of participants;

(2) Fees for consultants, experts, contractual services, and attorneys;

(3) Travel and travel related costs such as lodging, meals, tipping, telephone calls, etc.; and

(4) Document reproduction, postage, etc.

Procedures for applying: Applications must be filed with the Office of General Counsel, NOAA, no later than July 31, 1979, and shall contain the information required by and be filed in accordance with NOAA's financial participation regulations, 43 FR 17806 (April 26, 1978).

Dated: June 27, 1979.

R. L. Carnahan,

Acting Assistant Administrator for Administration.

[FR Doc. 79-20354 Filed 7-5-79; 8:45 am]

BILLING CODE 3510-22-M

THE COMMISSION OF FINE ARTS

Meeting

The Commission of Fine Arts will meet in open session on Tuesday, July 24, 1979 at 10:00 a.m. in the Commission's offices at 708 Jackson Place, N.W., Washington, D.C. 20006 to discuss various projects affecting the appearance of Washington, D.C.

Inquiries regarding the agenda and requests to submit written or oral statements should be addressed to Mr. Charles H. Atherton, Secretary, Commission of Fine Arts, at the above address.

Dated in Washington, D.C. 29 June 1979.

Charles H. Atherton,

Secretary.

[FR Doc. 79-20355 Filed 7-5-79; 8:45 am]

BILLING CODE 6330-01-M

DEPARTMENT OF DEFENSE

Corps of Engineers

Intent To Prepare a Draft Environmental Impact Statement (DEIS) for the Proposed Completion of the Baltimore Harbor and Channels, Maryland and Virginia, Continuing Construction Navigation Project

AGENCY: U.S. Army Corps of Engineers, DOD.

ACTION: Notice of Intent to Prepare a Draft Environmental Impact Statement (DEIS).

SUMMARY: 1. The proposed action is to dredge the remaining portions of the Baltimore Harbor and Channels, Maryland and Virginia, Navigation Project, as modified by the 1958 River and Harbor Act. The remaining work consists of:

a. Dredging the C&D Connecting Channel from its present 27-foot depth and 400-foot width to full depth and width of 35 feet by 600 feet.

b. Dredging the approach channels (Swan and Tolchester) from their present 35-foot depth and 450-foot width to their full width of 600 feet.

c. Disposal of approximately 1,030,000 cubic yards of dredged material generated from the dredging of the approach channels. This material will be placed overboard in the Pooles Island Deep, located in the Upper Chesapeake Bay. A discussion of the need for and environmental effects of dredging the remaining 7.2 mcy of material from the Connecting Channel is included in the DEIS. A discussion of the environmental effects of disposal of this material pends future identification of disposal capacity by the State of Maryland.

2. Alternatives to the proposed action include no action and alternative disposal options.

3.a. This project modification was authorized by the 1958 River and Harbor Act and was 85 percent complete as of Fiscal Year 1968. A public hearing was held on 25 June 1953 during preparation of the project authorizing document. Work remaining is the dredging of the Connecting Channel to the C&D Canal (presently 27 feet by 400 feet wide) to full depth and width (35 feet by 600 feet wide) and dredging the Approaches (i.e., Tolchester and Swan Point Sections) to the C&D Canal (presently 35 feet by 450 feet wide) to full width (600 feet). This remaining work has been deferred since FY 1972 (when project construction funds were last appropriated) because project benefits relating to the Connecting Channel to the C&D Canal rely on restoration of the C&D Canal to its authorized depth of 35 feet. When contacted by the Baltimore District, Corps of Engineers, regarding their present interest in completing the remaining work, the State of Maryland indicated that accomplishment of the remaining work is highly desirable.

3.b. The significant issue addressed by the DEIS is the effects of the placement of dredged material to be generated by project construction.

4. A DEIS has been prepared following coordination with the State of Maryland and receipt of local assurances. Due to the advanced state of the DEIS and relatively small amount of project work remaining, no additional scoping meeting will be held.

5. The DEIS will be available to the public during July 1979.

ADDRESS: Questions concerning the proposed action and DEIS can be answered by Mr. Daniel J. Mahoney, Project Manager, Baltimore District, Corps of Engineers, P.O. Box 1715, Baltimore, Maryland 21203. Telephone (301) 962-4067.

Dated: June 13, 1979.

G. K. Withers,

Colonel, Corps of Engineers, District Engineer.

[FR Doc. 79-20918 Filed 7-5-79; 8:45 am]

BILLING CODE 3710-41-M

Intent To Prepare a Draft Environmental Impact Statement (DEIS) for a Proposed Lava Flow Control Project Located Near Hilo, Hawaii

June 26, 1979.

AGENCY: U.S. Army Corps of Engineers, DoD Pacific Ocean Division.

ACTION: Notice of Intent to Prepare a DEIS.

SUMMARY: 1. *Description of the Proposed Action.* In July 1975, the State of Hawaii requested the U.S. Army Corps of Engineers to review and update earlier studies relating to protection of Hilo, Hawaii from lava flows. Both non-structural and structural measures were evaluated during the present study. Five structural alternative plans were determined to meet the planning objectives of the study and were evaluated in detail. The Corps' tentatively recommended plan is an administrative emergency plan, involving construction of diversion barrier segments only in the event that an approaching flow threatens Hilo. The administrative plan would result in significantly less environmental costs than the other structural plans under consideration, and would not be implemented until loss of property was imminent.

2. *Brief Description of Reasonable Alternatives.* Three of the structural diversion plans involve diversion barrier construction prior to an actual emergency; one of these plans incorporates additional freshwater cooling along a barrier alignment. A fourth plan involves only seawater cooling of the lava flow front. The barrier alternatives would result in destruction of relatively undisturbed native forest habitat along the barrier alignment, with potentially serious adverse impacts on endangered plants and wildlife.

3. *Scoping Process.* a. Proposed Public Involvement Program: The program has involved coordination with sponsoring agencies, other governmental agencies, community organizations and the

general public. Activities include informal meetings, workshops, formal public meetings, issuance of public notices and letter responses. All pertinent agencies have been informed of study initiation.

b. Identification of Significant Issues to be Analyzed in the DEIS: The DEIS will evaluate comparative effects of anticipated lava flows and project alternatives on the physical, biological and human environment. The primary difference between the pre-emergency and post-emergency alternatives will be the added effects of a lava flow that is only hypothetical for pre-emergency options and would be a certain, integral part of the post-emergency option. The most significant anticipated impacts of diversion options involves flora and fauna of native forest habitat, including several species listed or proposed for listing on the federal list of endangered species. Impacts on recreation and archaeological resources are also anticipated. Significant differences in perception of lava flow hazards among Hilo area residents, and expressed concern regarding spiritual considerations in manipulation of natural forces, are also discussed in the DEIS.

c. Possible Assignments for Input into EIS among the Lead and Cooperating Agencies:

(1) U.S. Fish and Wildlife Service—(Ecological Services Division) Preparation of a planning aid report and a coordination 2(b) report.

(2) U.S. Fish and Wildlife Services—(Endangered Species Office) Provision of pertinent biological data on endangered flora and fauna in the project site.

(3) Pertinent data from U.S. Forest Service, U.S. Geological Survey, State Division of Fish and Game.

d. Other Environmental Review and Consultation Requirements.

(1) Section 106 of the National Historic Preservation Act of 1966 and the Reservoir Salvage Act of 1960, as amended, require survey and coordination regarding potential impact on significant cultural resources. An initial evaluation of the existing and probable distribution of prehistoric/historic sites has been prepared by the Bishop Museum under contract to the Corps.

(2) The Endangered Species Act of 1973, as amended, requires formal consultation with the Endangered Species Office of the Fish and Wildlife Service for federal projects that may effect listed species of their critical habitats. Informal consultation has been initiated. The DEIS, together with research data gathered during Fish and Wildlife Service studies in the project area, will form the basis of a biological assessment as required by the Act. Formal consultation will be initiated, leading to a formal biological opinion to be prepared by the Fish and Wildlife Service.

(3) Section 404 of the Clean Water Act of 1977 requires the Corps to evaluate its own projects to assess impacts resulting from deposition of dredged or fill materials into waters of the United States.

4. A scoping meeting will not be held on this project. Input into the planning process has been received from the public and from relevant federal, state and county agencies as a result of several meetings, workshops and informal consultation.

5. The DEIS will be available to the public in July 1979.

ADDRESS: Questions about the Proposed Action and DEIS can be answered by: Mr. Harvey Young, Project Manager, U.S. Army Engineer Division, Pacific Division, Building 230, Fort Shafter, Hawaii 96858, Telephone: (808) 438-1307.

Dated: June 26, 1979.

Henry J. Hatch,

Brigadier General, U.S. Army, Division Engineer.

[FR Doc. 79-20359 Filed 7-5-79; 8:45 am]

BILLING CODE 3710-NN-M

Intent To Prepare a Draft Supplement Environmental Impact Statement for the Proposed Roseau River Flood Control Project in Roseau and Kittson Counties, Minn.

AGENCY: St. Paul District, U.S. Army Corps of Engineers.

ACTION: Revision of availability date for the Draft Supplement to the Final Environmental Impact Statement (EIS).

SUMMARY: A notice of intent to prepare a draft supplement environmental impact statement was published in the Federal Register, Vol 44, No. 88, 4 May 1979. The draft supplement was to be made available to the public by June 1979. A delay in the completion of engineering studies for the analysis of alternatives and mitigation features has made it necessary to revise the completion date for the draft supplement EIS.

The proposed action would provide damage reduction for flood events with a recurrence frequency of once in 30 years in the city of Roseau, once in 50 years in the agricultural area between Roseau and the Roseau Lakebed (approximately 8 miles), and once in 10 years for the remaining project area. This protection would be accomplished through channel modifications along 46.2 miles of the Roseau River between the Canadian border and the city of Roseau in northwestern Minnesota. The major modifications would include: channel widening, mainly along one bank; nine channel cutoffs totalling 5 miles with diversion structures to pass low flows through 11¾ miles of existing channel; construction of two levees (7.7 miles); and placement of five channel plugs in abandoned loops. A total of 87 side ditch inlets would be fixed for erosion and drainage control.

In addition to the proposed action, the following reasonable alternatives have been identified:

1. No action, i.e., no reduction in frequency or duration of flooding.

2. Non-structural methods, i.e., temporary or permanent evacuation of the floodplain, floodwarning and emergency protection, or floodproofing of buildings.

3. Floodwater storage, i.e., impounded storage in the drained bed of Roseau Lake with or without tributary storage on Sprague Creek, or storage in the downstream Big Swamp area, all of these with or without channel modification from the city of Roseau to the impoundment.

4. Channel modification with bypass, i.e., excavating a high-flow bypass channel along the alignment of existing State Ditch 51, to avoid excavation in a 6-mile-high gradient reach containing the majority of the walleye-spawning habitat in the project area.

5. Levees, i.e., the effective height of the channel banks would be raised to accommodate flood flows.

6. Floodway, i.e., increased width of excavation and decreased depth limited to a level above the ordinary low-flow channel elevation.

7. Increased urban protection, i.e., providing protection against 50- and 100-year flood events for the entire urban area.

Copies of the Draft and Final Environmental Impact Statement were provided for coordination to all concerned Federal, State, and local agencies; affected Indian tribes; and private organizations and individuals. Copies of the Draft Supplement EIS will be provided to all those identified above. Anyone else who is interested in reviewing this supplement is invited to do so and should contact the St. Paul District, Corps of Engineers to assure that they are included on the mailing list.

Significant issues to be analyzed in the Draft Supplement EIS include:

1. Project design modifications completed since publication of the Final EIS.

2. An expanded discussion of alternatives considered.

3. Measures to mitigate project-induced losses.

4. A Section 404(b) Evaluation of the discharge into U.S. waters of dredged or fill material.

Our review of the project will be conducted in accordance with the requirements of the National Environmental Policy Act of 1969, Council on Environmental Quality Regulations (40 CFR Part 1500–1508), and applicable Corps of Engineers regulations and guidance. A Draft Environmental Impact Statement is currently being prepared by the Minnesota Department of Natural Resources.

A scoping meeting will not be held for the preparation of this supplement since its preparation was initiated early in 1978. Significant issues to be discussed in this supplement were identified through coordination with Federal, State, and local government agencies; interested citizens' groups; and individual citizens.

We estimate that the Draft Supplement EIS will be available to the public during the second quarter of fiscal year 1980.

Questions concerning the proposed action and the Draft Supplement EIS can be directed to: Colonel William W. Badger, District Engineer, St. Paul District, Corps of Engineers, 1135 U.S. Post Office and Custom House, St. Paul, Minnesota 55101.

Dated: June 25, 1979.

Walter L. Heme,

Acting District Engineer.

[FR Doc. 79-20857 Filed 7-5-79; 8:45 am]

BILLING CODE 3710-CY-M

Corps of Engineers, Department of the Army

Washington State; Intent To Prepare Draft Environmental Impact Statement

AGENCY: U.S. Army Corps of Engineers, DoD, Seattle District.

ACTION: Notice of Intent to Prepare a Draft Environmental Impact Statement (DEIS).

SUMMARY: 1. *Description of Action:* A 70–30 cost share program for the control of the aquatic plant Eurasian watermilfoil is proposed for the State of Washington. The initial program, in 1980, would include the treatment of approximately 91 acres in Lakes Washington, Sammamish, and Union and spot treatment in Osoyoos Lake and the Okanogan River. The primary control methods would be mechanical harvesting and 2,4–D application. Public information and surveillance would be stressed to prevent spread. Other treatments methods which may be used are barrier structures; aquascreens; the chemicals endothall, casoron, and diquat; suction dredges; handpulling; and rotovators depending on local conditions.

2. *Alternatives to the Proposed Action:* Available alternative control methods include dredging; hydraulic washing; water level fluctuation; the chemicals simazine, silvex, fenac, and endothall (DMA salt); and possible biological agents.

Alternatives in scope range from no action to an effort of total eradication.

3. *Environmental Review and Public Input:* The Aquatic Plant Control Study was initiated in 1977 at the request of the Washington State Department of Ecology (WDE). Joint public workshops were put on by the Seattle District and WDE on July 12, 1977 and January 30, 1979 in Seattle, Washington and on July 14, 1977 and January 25, 1979 in Oroville, Washington. In addition, a public information pamphlet was widely distributed by the Seattle District in January 1979 requesting public input. No further public involvement is planned until public review of the DEIS.

Close coordination has been undertaken with Federal and state resource agencies and local governments since the start of the study.

4. *Significant Issues:* Considerable controversy exists over the application of aquatic herbicides to public waters. The impacts of utilizing chemicals for aquatic plant control will be addressed in the DEIS. The impacts of other treatment methods will also be discussed.

5. *Availability:* The DEIS is presently scheduled to become available to the public on July 1, 1979.

6. *Address:* Information concerning the proposed action and DEIS can be obtained by contacting: Robert Rawson, Department of the Army, Seattle District, Corps of Engineers, Post Office Box C–3755, Seattle, Washington 98124, ATTN: NPSEN-PL-ER, Phone (206) 764–3624 (FTS 399–3624).

Maxey B. Carpenter, Jr.,

Acting District Engineer.

[FR Doc. 79-19360 Filed 7-5-79; 8:45 am]

BILLING CODE 3710-ER-M

Defense Civil Preparedness Agency

Civil Defense Identity Card SF 138

Pursuant to authority contained in sections 201, 204, and 401 of the Federal Civil Defense Act of 1950, as amended (50 U.S.C. App. 2281, 2284, and 2253), Executive Order 10952, July 20, 1961, 26 FR 6577, a regulation was issued, now appearing as Part 1810 of Title 32, Code of Federal Regulations. The purpose of the regulation was to establish a uniform identification system for Federal, and non-Federal support, civilian personnel designated to perform essential duties during a civil defense emergency period or upon attack on the United States.

The Regulation prescribed a card, SF 138, which used the civil defense insignia prescribed in Part 1806 of this chapter, and a procedure for issuing the card.

In 43 FR 5389, for reasons stated in the Supplementary Information part it was proposed that the regulation be withdrawn, and the SF 138 Identity Card no longer be issued. The time for comment has now passed. Since a new agency, the Federal Emergency Management Agency, has been established, with a broader civil emergency and civil preparedness mission, it is desirable it have maximum flexibility in issuance of card. This regulation should be deleted, and FEMA allowed to issue instructions, if any, on the subject.

Clifford E. McLain,

Acting Director.

[FR Doc. 79-20839 Filed 7-5-79; 8:45 am]

BILLING CODE 3810-01-M

Office of the Secretary

Defense Science Board Task Force on ECM; Advisory Committee Meeting

The Defense Science Board Task Force on ECM will meet in closed session August 17, 1979 at the Pentagon, Washington, D.C.

The mission of the Defense Science Board is to advise the Secretary of Defense and the Under Secretary of Defense for Research and Engineering on scientific and technical matters as they affect the perceived needs of the Department of Defense.

The Task Force will discuss potential technical solutions to several current problems in electronic counter-measures.

In accordance with 5 U.S.C. App. I, 10(d)(1976), it has been determined that this Defense Science Board Task Force meeting concerns matters listed in 5

U.S.C. 552b(c)(1)(1976), and that accordingly, this meeting will be closed to the public.

H. E. Lofdahl,

Director, Correspondence and Directives, Washington Headquarters Services, Department of Defense.

July 2, 1979.

[FR Doc. 79-20312 Filed 7-5-79; 8:45 am]

BILLING CODE 3810-70-M

Defense Science Board Task Force on Strategic Planning Experiment in the Maritime Balance Area; Advisory Committee Meeting

The Defense Science Board Task Force on Strategic Planning Experiment in the Maritime Balance Area will meet in closed session on July 25, 1979 in the Pentagon, Washington, D.C.

The mission of the Defense Science Board is to advise the Secretary of Defense and the Under Secretary of Defense for Research and Engineering on scientific and technical matters as they affect the perceivied needs of the Department of Defense.

A meeting of the Task Force on Strategic Planning Experiment in the Maritime Balance Area has been scheduled for July 25, 1979 to discuss the conduct of an experiment in applying business policy/strategic planning concepts to the development of a competitive strategy for the Maritime Balance Area. The Task Force and its associated Navy Study Group will focus on the long-term competition between the U.S. and the Soviet Union in the maritime area.

In accordance with 5 U.S.C. App. I 10(d) (1976), it has been determined that this Defense Science Board Task Force meeting concerns matters listed in 5 U.S.C. 552b(c)(1) (1976), and that accordingly this meeting will be closed to the public.

July 2, 1979.

H. E. Lofdahl,

Director, Correspondence and Directives, Washington Headquarters Services, Department of Defense.

[FR Doc. 79-20311 Filed 7-5-79; 8:45 am]

BILLING CODE 3810-70-M

DEPARTMENT OF ENERGY

Economic Regulatory Administration

Clark & Clark; Action Taken on Consent Order

AGENCY: Economic Regulatory Administration, Department of Energy.

ACTION: Notice of action taken and opportunity for comment on Consent Order

SUMMARY: Economic Regulatory Administration (ERA) of the Department of Energy (DOE) announces action taken to execute a Consent Order and provides an opportunity for public comment on the Consent Order and on potential claims against the refunds deposited in an escrow account established pursuant to the Consent Order.

DATES: Effective date: June 7, 1979. Comments by: August 6, 1979.

ADDRESS: Send comments to: Mr. Wayne I. Tucker, District Manager of Enforcement, Southwest District, P.O. Box 35228, Dallas, Texas 75235.

FOR FURTHER INFORMATION CONTACT: Mr. Wayne I. Tucker, District Manager of Enforcement, Southwest District, [phone] 214-749-7626.

SUPPLEMENTARY INFORMATION: On June 7, 1979, the Office of Enforcement of the ERA executed a Consent Order with Clark & Clark (Clark) of Ardmore, Oklahoma. Under 10 CFR § 205.199J(b), a Consent Order which involves a sum of less than $500,000 in the aggregate, excluding penalties and interest, becomes effective upon its execution.

Because of the complex settlement negotiations in this case as well as the concern to avoid delay in the payment of refunds, the DOE has determined that it is in the public interest to make the Consent Order with Clark effective as of the date of its execution by the DOE and Clark.

I. The Consent Order

Clark, with its home office located in Ardmore, Oklahoma is a firm engaged in crude oil production, and is subject to the Mandatory Petroleum Price and Allocation Regulations at 10 CFR Parts 210, 211, 212. To resovle certain civil actions which could be brought by the Office of Enforcement of the Economic Regulatory Administration as a result of its audit of Clark, the Office of Enforcement, ERA, and Clark entered into a Consent Order, the significant terms of which are as follows:

1. During the audit period of September 1973 through March 1978, Clark sold crude oil from two (2) properties at prices greater than allowed by ERA regulations. The firm who was initially overcharged was Continental Oil Company.

2. During the audit period Clark sold an improper amount of "stripper" oil. Clark's actions constituted violations of 6 CFR § 150.354(c)(1) and 10 CFR § 212.73(a)

3. The Consent Order constituted neither an admission by Clark that ERA regulations were violated nor a finding by the ERA that Clark violated ERA regulations.

4. The Consent Order represents a settlement between the Department of Energy and the firm and does not require remedies in the full amount that the Department would contend for if the matter proceeded through the Department's hearing process.

5. The provisions of 10 CFR § 205.199J, including the publication of this Notice, are applicable to the Consent Order.

II. Disposition of Refunded Overcharges

In this Consent Order, Clark agrees to refund, in full settlement of any civil liability with respect to actions which might be brought by the Office of Enforcement, ERA, arising out of the transactions specified in I.1. above, the sum of $45,000 plus interest at ERA's specified rates on or before August 7, 1979. Refunded overcharges will be in the form of a certified check made payable to the United States Department of Energy and will be delivered to the Assistant Administrator for Enforcement, ERA. These funds will remain in a suitable account pending the determination of their proper disposition.

The DOE intends to distribute the refund amounts in a just and equitable manner in accordance with applicable laws and regulations. Accordingly, distribution of such refunded overcharges requires that only those "persons" (as defined at 10 CFR § 205.2) who actually suffered a loss as a result of the transactions described in the Consent Order receive appropriate refunds. Because of the petroleum industry's complex marketing system, it is likely that overcharges have either been passed through as higher prices to subsequent purchasers or offset through devices such as the Old Oil Allocation (Entitlements) Program, 10 CFR § 211.67. In fact, the adverse effects of the overcharges may have become so diffused that it is a practical impossibility to identify specific, adversely affected persons, in which case disposition of the refunds will be made in the general public interest by an appropriate means such as payment to the Treasury of the United States pursuant to 10 CFR § 200.199I(a).

III. Submission of Written Comments

A. *Potential Claimants:* Interest persons who believe that they have a claim to all or a portion of the refund

amount should provide written notification of the claim to the ERA at this time. Proof of claims is not now being required. Written notification to the ERA at this time is requested primarily for the purpose of identifying valid potential claims to the refund amount. After potential claims are identified, procedures for the making of proof of claims may be established. Failure by a person to provide written notification of a potential claim within the comment period for this Notice may result in the DOE irrevocably disbursing the funds to other claimants or to the general public interest.

B. *Other Comments:* The ERA invites interested persons to comment on the terms, conditions, or procedural aspects of this Consent Order.

You should send your comments or written notification of a claim to Mr. Wayne I. Tucker, District Manager of Enforcement, Southwest District, P.O. Box 35228, Dallas, Texas 75235. You may obtain a free copy of this Consent Order by writing to the same address or by calling 214-749-7626.

You should identify your comments or written notification of a claim on the outside of your envelope and on the documents you submit with the designation, "Comments on Clark & Clark Consent Order." We will consider all comments we receive by 4:30 p.m., local time, on August 6, 1979. You should identify any information or data which, in your opinion, is confidential and submit it in accordance with the procedures in 10 CFR § 205.9(f).

Issued in Dallas, Texas, on the 22nd day of June, 1979.

Wayne I. Tucker,

District Manager of Enforcement.

[FR Doc. 79-20844 Filed 7-5-79; 8:45 am]

BILLING CODE 6450-01-M

[ERA Case No. 52053-2594-06-77; Oswego Unit No. 6

Niagara Mohawk Power Corp.

AGENCY: Economic Regulatory Administration, Department of Energy.

ACTION: Notice of request for classification.

SUMMARY: On June 4, 1979, Niagara Mohawk Power Corporation (Niagara Mohawk) requested the Economic Regulatory Administration (ERA) of the Department of Energy (DOE) to classify Oswego Unit No. 6 as an existing facility pursuant to Section 515.6 of the Revised Interim Rule to Permit Classification of Certain Powerplants and Installations as Existing Facilities (Revised Interim Rule) issued by ERA on March 15, 1979 (44 FR 17464) and pursuant to the provisions of the Powerplant and Industrial Fuel Use Act of 1978, Pub. L. 95-620 (FUA). FUA imposes certain statutory prohibitions against the use of natural gas and petroleum by new and existing electric powerplants. ERA's decision in this matter will determine whether Oswego Unit No. 6 is a new or existing powerplant. The prohibitions which apply to existing powerplants are different from those which apply to new powerplants.

The purpose of this Notice is to invite interested persons to submit written comments on this matter prior to the issuance of a final decision by ERA. In accordance with Section 515.26 of the Revised Interim Rule, no public hearings will be held.

DATES: Written comments are due on or before July 30, 1979.

ADDRESSES: Ten copies of written comments shall be submitted to: Department of Energy, Case Control Unit, Box 4629, Room 2313, 2000 M Street, N.W., Washington, D.C. 20461.

FOR FURTHER INFORMATION CONTACT:

William L. Webb (Office of Public Information), Economic Regulatory Administration, Department of Energy, 2000 M Street, N.W., Room B-110, Washington, D.C. 20461 Phone (202) 634-2170.

Charles A. Falcone, Director, Division of Existing Facilities Conversion, Economic Regulatory Administration, Department of Energy, 2000 M Street, N.W., Room 31281, Washington, D.C. 20461 (202) 254-4750.

James H. Heffernan (Office of the General Counsel), Department of Energy, 12th & Pennsylvania Ave., N.W., Room 7134, Washington, D.C. 20461, (202) 633-8814.

Robert L. Davies, Acting Assistant Administrator, Office of Fuels Conversion, Economic Regulatory Administration, 2000 M Street, N.W., Room 7202, Washington, D.C. 20461, Phone: (202) 254-3910.

SUPPLEMENTARY INFORMATION: Niagara Mohawk Power Corporation (Niagara Mohawk) is a corporation organized under the laws of the State of New York. Niagara Mohawk supplies electric service in the western and northern counties of upstate New York.

Niagara Mohawk stated that it executed contracts in 1972 and 1973 for the construction of a 850 MW, No. 6 fuel oil fired generating unit, to be known as Oswego Unit No. 6, in Oswego County, New York, and that commercial operation is scheduled for February 1, 1980. On June 4, 1979, pursuant to ERA's Revised Interim Rule to Permit Classification of Certain Powerplants and Installations as Existing Facilities (Revised Interim Rule) issued by ERA on March 15, 1979, Niagara Mohawk requested that ERA classify Oswego Unit No. 6 as an existing facility.

In accordance with Section 515.6 of ERA's Revised Interim Rule, a poweplant will be classified as existing if the cancellation, rescheduling or modification of the construction or acquisition of a powerplant would result in a substantial financial penalty or an adverse effect on the electric system reliability. Niagara Mohawk supported its request for classification by providing evidence in support of their claim that their consumers would suffer a substantial financial penalty if Oswego Unit No. 6 were not permitted to proceed as an oil-burning facility.

A summary of the evidence requirements and Niagara Mohawk's response to those requirements follows:

Substantial financial penalty—Pursuant to Section 515.6(a) of the Revised Interim Rule, ERA will classify a facility as existing upon a demonstration that at least 25 percent of the total projected project cost as of November 9, 1978, was expended in nonrecoverable outlays as of November 9, 1978.

In response to the evidence requirements of Section 515.7(b)(1) of the Revised Interim Rule, Niagara Mohawk provided the following information:

—total projected project cost on 11/9/78 was $244,000,000;

—total project expenditures on 11/9/78 were $189,535,000;

—total recoverable expenditures were $117,265,000;

—total claimed financial penalty (including obligation and cancellation charges as of 11/9/78) was $73,791,000 or 30.2 percent of total projected project cost as of 11/9/78.

Niagara Mohawk provided the following additional information which it believes ERA should consider:

—On May 9, 1979, the Unit (Oswego Unit No. 6) was 90 percent complete and the Boiler was 95 percent complete. In addition, approximately $20,000,000 was expended on Oswego Unit No. 6 between November 9, 1978, and May 9, 1979.

—An additional $12,000,000 is being spent for oil delivery facilities to accomodate Oswego Unit No. 6.

—Niagara Mohawk estimates that conversion to coal would delay completion of the unit for two to three years with lost revenue and higher fuel costs amounting to $50,000,000. Carrying costs during conversion are also estimated at an additional $50,000,000.

There appears to be a reasonable likelihood that Oswego Unit No. 6 will be determined to be an existing facility. ERA hereby invites all interested persons to submit written comments on this matter.

The public file, containing Niagara Mohawk's request for classification and supporting materials, is available for inspection upon request at: ERA, Room B-110, 2000 M Street, N.W., Washington, D.C. 20461, Monday-Friday, 8:00 a.m. to 4:30 p.m.

Issued in Washington, D.C., on July 1, 1979.

Robert L. Davies,

Acting Assistant Administrator, Office of Fuels Conversion, Economic Regulatory Administration.

[FR Doc. 79-20842 Filed 7-5-79; 8:45 am]

BILLING CODE 6450-01-M

Refiners Crude Oil Allocation Program; Supplemental Notice for Allocation Period of April 1, 1979, Through September 30, 1979

The notice specified in 10 CFR 211.65(g) of the refiners' crude oil allocation (buy/sell) program for the allocation period of April 1, 1979, through September 30, 1979, was issued March 30, 1979 (44 FR 21062, April 9, 1979). Subsequent to the publication of this Notice, the Economic Regulatory Administration (ERA) of the Department of Energy (DOE) assigned emergency allocations for the months of April, May, and June 1979, pursuant to 10 CFR 211.65(c)(2) to a number of small refiners and issued supplemental buy/sell lists on April 11, 1979, (44 FR 24336, April 25, 1979), May 16, 1979, (44 FR 29955, May 23, 1979), and June 8, 1979 (44 FR 34186, June 14, 1979). The ERA hereby issues a fourth supplemental buy/sell list for the allocation period of April 1, 1979, through September 30, 1979, which sets forth one adjustment to a previously issued emergency allocation and new emergency allocations for the months of July and August 1979, assigned pursuant to 10 CFR 211.65(a)(5) and 10 CFR 211.65(c)(2), as amended on Arpil 27, 1979, (44 FR 26060, May 4, 1979).

The supplemental buy/sell list for the allocation period April 1, 1979, through September 30, 1979, is set forth as an appendix to this notice. The list includes the names of the small refiners granted emergency allocations for the months of July and August 1979 and their eligible refineries; the quantity of crude oil each refiner is eligible to purchase; the fixed percentage share for each refiner-seller; the quantity of crude oil that each refiner-seller is obligated to offer for sale to refiner-buyers pursuant to the supplemental buy/sell notice for the April 1, 1979, through September 30, 1979, allocation period issued June 8, 1979; the new total sales obligation of each refiner-seller, which reflects each refiner-seller's obligation to sell to the refiner-buyer for the emergency allocation listed herein; and the total sales obligation for all refiner-sellers.

The allocations for the small refiners on the supplemental buy/sell list were determined in accordance with 10 CFR 211.65(c)(2) or, in the case of one small refiner, 10 CFR 211.65 (a)(5). Sales obligations for refiner-sellers were determined in accordance with 10 CFR 211.65(e) and (f).

The buy/sell list covers PAD Districts I through V, and amounts shown are in barrels of 42 gallons each, for the specified period. Pursuant to 10 CFR 211.65(f), each refiner-seller shall offer for sale during an allocation period, directly or through exchanges to refiner-buyers, a quantity of crude oil equal to that refiner-seller's sales obligation plus any volume that the ERA directs the refiner-seller to sell pursuant to 10 CFR Section 211.65(j).

Pursuant to 10 CFR 211.65(h), each refiner-buyer and refiner-seller is required to report to ERA in writing or by telegram the details of each transaction under the buy/sell list within forty-eight hours of the completion of arrangements therefor. Each report must identify the refiner-seller, the refiner-buyer, the refineries to which the crude oil is to be delivered, the volumes of crude oil sold or purchased, and the period over which the delivery is expected to take place.

The procedures of 10 CFR 211.65(j) provide that if a sale is not agreed upon subsequent to the date of publication of this notice, a refiner-buyer that has not been able to negotiate a contract to purchase crude oil may request that the ERA direct one or more refiner-sellers to sell a suitable type of crude oil to such refiner-buyer. Such request must be received by the ERA no later than 20 days after the publication date of this supplemental buy/sell notice. Upon such request, the ERA may direct one or more refiner-sellers that have not completed their required sales to sell crude oil to the refiner-buyer.

In directing refiner-sellers to make such sales, ERA will consider the percentage of each refiner-seller's sales obligation for the allocation period that has been sold as reported pursuant to § 211.65(h), as well as the refiner-seller or sellers that can best be expected to consummate a particular directed sale. If, in ERA's opinion, a valid directed sale request cannot reasonably be expected to be consummated by a refiner-seller that has not completed all or substantially all of its sales obligation for the allocation period, the ERA may issue one or more directed sales orders that would result in one or more refiner-sellers selling more than their published sales obligations for that allocation period. In such cases, the refiner-seller or sellers will receive a barrell-for-barrel reduction in their sales obligations for the next allocation period pursuant to 10 CFR 211.65(f)(3)(ii).

If the refiner-buyer declines to purchase the crude oil specified by ERA, the rights of that refiner-buyer to purchase that volume of crude oil are forfeited during this allocation period, provided that the refiner-seller or refiner-sellers have fully complied with the provision of 10 CFR 211.65.

Refiner-buyers making requests for directed sales must document their inability to purchase crude oil from refiner-sellers by supplying the following information to ERA:

(i) Name of the refiner-buyer and of the person authorized to act for the refiner-buyer in buy/sell program transactions.

(ii) Name and location of the refineries for which crude oil has been sought, the amount of crude oil sought for each refinery, and the technical specifications of crude oils that have historically been processed in each refinery.

(iii) Statement of any restrictions, limitations, or constraints on the refiner-buyer's purchases of crude oil, particularly concerning the manner or time of deliveries.

(iv) Names and locations of all refiner-sellers from which crude oil has been sought under the buy/sell notice, the refineries for which crude oil has been sought, and the volume and specifications of the crude oil sought from each refiner-seller.

(v) The response of each refiner-seller to which a request to purchase crude oil has been made, and the name and telephone number of the individual contacted at each such refiner-seller.

(vi) Such other pertinent information as ERA may request.

All reports and applications made under this notice should be addressed to: Chief, Crude Oil Allocation Branch, 20th Street Postal Station, P.O. Box 19028, Washington, D.C. 20036.

Copies of the decisions and orders assigning the emergency allocations listed herein, as well as the applications, may be obtained from: Economic Regulatory Administration, Public Information Office, 2000 M Street, NW., Rm. B110, Washington, D.C. 20461, (202) 634-2170.

The ERA Public Information Office also has available copies of pending applications for emergency allocations under the buy/sell program.

ERA requires each applicant for an emergency allocation to serve all refiner-sellers with a copy of its application and any amendments thereto. If the applicant claims confidentiality for any of the information contained in its application, the basis for the claim must be clearly stated. Comments on each application will be accepted by ERA if filed within eight days of service of the application.

This notice is issued pursuant to Subpart G of DOE's regulations governing its administrative procedures and sanctions, 10 CFR Part 205. Any person aggrieved hereby may file an appeal with DOE's Office of Hearings and Appeals in accordance with Subpart H of 10 CFR Part 205. Any such appeal shall be filed on or before August 6, 1979.

Issued in Washington, D.C., June 29, 1979.

Doris J. Dewton,

Acting Assistant Administrator, Fuels Regulation, Economic Regulatory Administration.

Appendix

The Buy/Sell list for the period April 1, 1979, through September 30, 1979, is hereby amended to reflect emergency allocations for the months of July and August 1979, and the resulting changes in sales obligations of refiner-sellers. The amended list sets forth the name of each refiner-seller, the volumes of crude oil that each such refiner-seller is required to offer for sale to refiner-buyers, and emergency allocations for the months of July and August 1979. Tha amended list does not reflect volumes sold by refiner-sellers for the April 1, 1979, through September 30, 1979, allocation period.

Crude Oil Allocation Program Sales Obligations for the Period April 1, 1979–September 30, 1979

Refiner-sellers	Share[1]	Sales obligation as of 6/8/79	New Total
		(Barrels)	(Barrels)
Amoco Oil Co.	.105	2,284,688	3,340,153
Atlantic Richfield Co.	.077	1,659,123	2,434,201
Chevron U.S.A., Inc.	.101	2,459,675	3,482,197
Cities Service Co.	.025	1,197,964	1,445,833
Continential Oil Co.	.004	84,564	124,871
Exxon Co., U.S.A.	.089	1,891,535	2,778,372
Getty Refining & Marketing Co.	.021	563,949	777,729
Gulf Refining & Marketing Co.	.091	2,219,333	3,137,452
Marathon Oil Co.	.022	474,173	704,479
Mobil Oil Corp.	.094	2,040,595	2,988,662
Phillips Petroleum Co.	.041	899,853	1,316,781
Shell Oil Co.	.113	2,581,502	3,726,410
Sun Co.	055	1,293,197	1,852,430
Texaco Inc.	.114	2,375,464	3,521,309
Union Oil Co. of California	046	1,120,624	1,581,235
Total sales		23,135,239	33,212,054

[1] All Refiner-Sellers' percentage shares have been changed to reflect the Continential Oil Company and Exxon Company, U.S.A. Decision and Order dated March 20, 1979. Case numbers are FEX-0184 and FEX-0185

Reductions in Allocations

ERA has been notified by CRA Farmland that it has been able to purchase additional crude oil outside the Buy/Sell Program for the month of June 1979. This oil was not considered in determining CRA Farmland's emergency allocation for June 1979. Therefore, CRA Farmland's June 1979 emergency allocation is hereby reduced by 87,000 barrels to 455,880 barrels.

Emergency Allocations for July and August 1979

Refiner	Refinery location	July 1979 allocation	August 1979 allocation
		(Barrels)	(Barrels)
Allied Materials[1]	Storud, Okla.	100,657	100,657
Bruin	St. James, La.	205,561	224,161
Caribou Four Corners	Woods Cross, Ut.	23,343	28,334
Crystal Refining Co.	Carson City, Mich.	73,005	73,005
Ergon	Vicksburg, Miss.	187,116	187,116
Farmers Union Central Exchange	Laurel, Mt.	274,567	298,238
Gladieux	Fort Wayne, Ind.	189,317	188,542
Hudson	Cushing, Okla.	502,417	469,699
Indiana Farm Bureau	Mt. Vernon, Ind.	213,993	213,993
Lakeside	Kalamazoo, Mich.	25,048	25,048
NCRA	McPherson, Kan.	574,988	574,938
Rock Island	Rock Island, Ind.	672,266	672,266
Saber	Corpus Christi, Tx.	131,719	131,719
Shepherd	Jennings, La.	59,520	68,913
Texas City	Texas City, Tx.	1,109,521	1,490,542
Tipperary	Ingleside, Tx.	28,427	28,427
United	Warren, Pa.	441,905	501,921
Western	Woods Cross, Ut.	39,339	39,339
		4,852,709	5,311,108

[1] Allied Materials allocation granted under 10 CFR 211.65(a)(5).

Total Previously Published Allocations	23,135,239 barrels
Emergency Allocation (July)	4,852,709 barrels
Emergency Allocations (August)	5,311,108 barrels
Less CRA Adjustment (June)	−87,000 barrels
Total allocations	33,212,054 barrels

[FR Doc. 79-20932 Filed 7-5-79; 8:45 am]
BILLING CODE 6450-01-M

W. A. Moncrief, Jr.; Action Taken on Consent Order

AGENCY: Economic Regulatory Administration, Department of Energy.

ACTION: Notice of Action taken and opportunity for comment on Consent Order.

SUMMARY: The Economic Regulatory Administration (ERA) of the Department of Energy (DOE) announces action taken to execute a Consent Order and provides an opportunity for public comment on the Consent Order and on potential claims against the refunds deposited in an escrow account established pursuant to the Consent Order.

DATES: Effective date: June 29, 1979. Comments by: August 6, 1979.

ADDRESS: Send comments to: Wayne I. Tucker, District Manager of Enforcement, Southwest District Office, Department of Energy, P.O. Box 35228, Dallas, Texas 75235.

FOR FURTHER INFORMATION CONTACT: Wayne I. Tucker, District Manager of Enforcement, Southwest District Office, Department of Energy, P.O. Box 35228, Dallas, Texas 75235, Phone 214/749-7627.

SUPPLEMENTARY INFORMATION: On June 29, 1979, the Office of Enforcement of the ERA executed a Consent Order with W. A. Moncrief, Jr. of Fort Worth, Texas. Under 10 CFR 205.199J(b), a Consent Order which involves a sum of $500,000 or more in the aggregate, excluding penalties and interest, becomes effective upon its execution only if the DOE expressly finds it to be in the public interest to do so.

Because the DOE and W. A. Moncrief, Jr. wish to expeditiously resolve this matter as agreed to avoid delay in the payment of refunds, the DOE has determined that it is in the public interest to make the Consent Order with W. A. Moncrief, Jr. effective as of the date of its execution by the DOE and W. A. Moncrief, Jr.

I. Consent Order

W. A. Moncrief, Jr. with its home office in Fort Worth, Texas, is a firm engaged in the production and sale of crude oil and is subject to the Mandatory Petroleum Price and Allocation Regulations at 10 CFR, Parts 210, 211, 212. The Office of Enforcement of the Economic Regulatory Administration (ERA) and W. A. Moncrief, Jr. entered into a Consent Order to resolve certain civil actions which could be brought by ERA as a result of its audit of the crude oil sales by W. A. Moncrief, Jr. This Consent Order settles those matters relative to W. A. Moncrief, Jr.'s production and sale of crude during the period September 1, 1973 through June 30, 1977.

The significant terms of the Consent Order with W. A. Moncrief, Jr. are as follows:

1. W. A. Moncrief, Jr. improperly applied the provisions of 10 CFR 212.73 and its predecessor, 6 CFR § 150.353 when determining the prices to be charged for certain domestic crude oil.

2. W. A. Moncrief, Jr. understands and agrees to refund $1,100,000.00 to the DOE by certified check. This amount is in full settlement of any and all civil liability within the jurisdiction of the DOE in regard to actions that might be brought by the DOE arising out of the specified transactions for the following properties:

Ida & T. J. Hendricks
Falvey
Polvado
Moncrief Bob-K Unit
Masten
F. A. Bradshaw

3. The provisions of 10 CFR 205.199J, including the publication of this Notice, are applicable to the Consent Order.

II. Disposition of Refunded Overcharges

Refunded overcharges as described in 2. above will be made in five installment. The first payment is due on or before 30 days after the effective date of this Consent Order. Each additional payment is due at 3 month intervals thereafter with the last payment being due at one year and 30 days after the effective date of this Consent Order. Delivery of such payments shall be to the Assistant administrator for Enforcement, Economic Regulatory Administration, in the form of a certified check made payable to the United States Department of Energy.

The DOE intends to distribute the refund amounts in a just and equitable manner in accordance with applicable laws and regulations. Accordingly, distribution of such refunded overcharges requires that only those "person" (as defined at 10 CFR 205.2) who actually suffered a loss as a result of the transactions described in the Consent Order receive appropriate refunds. Because of the petroleum industry's complex marketing system, it is likely that overcharges have either been passed through as higher prices to subsequent purchasers or offset through devices such as the Old Oil Allocation (Entitlements) Program, 10 CFR 211.67. In fact, the adverse effects of the overcharges may have become so diffused that it is a practical impossibility to identify specific, adversely affected person, in which case disposition of the refunds will be made in the general public interest by an appropriate means such as payment to the Treasury of the United States pursuant to 10 CFR 205.199I(a).

III. Submission of Written Comments

Potential Claimants: Interested persons who believe that they have a claim to all or a portion of the refund amount should provide written notification of the claim to the ERA at this time. Proof of claims is not now being required. Written notification to the ERA at this time is requested primarily for the purpose of identifying valid potential claims to the refund amount. After potential claims are identified, procedures for the making of proof of claims may be established.

Failure by a person to provide written notification of a potential claim within the comment period for this Notice may result in the DOE irrevocably disbursing the funds to other claimants or to the general public interest.

Other Comments: The ERA invites interested persons to comment on the terms, conditions, or procedural aspects of this Consent Order.

You should send your comments or written notification of a claim to Wayne I. Tucker, District Manager of Enforcement, Southwest District Office, Department of Energy, P. O. Box 35228, Dallas, Texas 75235. You may obtain a free copy of this Consent Order by writing to the same address or by calling 214/749-7626.

You should identify your comments or written notification of a claim on the outside of your envelope and on the documents you submit with the designation, "Comments on W. A. Moncrief, Jr. Consent Order." We will consider all comments we receive by 4:30 p.m., local time, August 6, 1979. You should identify any information or data which, in your opinion, is confidential and submit it in accordance with the procedures in 10 CFR 205.9(f).

Issued in Dallas, Texas, on the 19th day of June 1979.

Wayne I. Tucker,

District Manager of Enforcement, Southwest District Office, Economic Regulatory Administration.

[FR Doc. 79-20043 Filed 7-5-79; 8:45 am]
BILLING CODE 6450-01-M

Federal Energy Regulatory Commission

[Docket No. TC79-133]

Citizens Utilities Co.; Petition for Relief

June 27, 1979.

Take notice that on May 25, 1979, Citizens Utilities Company (Citizens),

High Ridge Park, Stamford, Connecticut 06905, filed in Docket No. TC79-133, a petition pursuant to Sections 1.7(b) of the Commission's Rules of Practice and Procedure (18 CFR 1.7(b) and 2.78(b)) of the Commission's General Policy and Interpretations (18 CFR 2.78(b)) for relief from the natural gas curtailment provisions of El Paso Natural Gas Company's (El Paso) currently effective tariffs, all as more full set forth in the petition which is on file with the Commission and open to public inspection.

It is stated that under El Paso's curtailment plan, the volumes of natural gas Citizens is entitled to take from El Paso are limited by its base volumes and peak day entitlements, as mandated in Commission Opinions Nos. 697 and 697-A, El Paso Natural Gas Company, Docket No. RP72-6. Citizens indicates that the Commission has declared that a customer's base volumes serve as the absolute limit on the quantity of natural gas which El Paso is authorized to deliver to that customer.

Citizens' curtailment plan provides that Citizens would retain applications for natural gas service in chronological order by priority. As gas becomes available, those applications are to be satisfied by first connecting all pending Priority 1 applications in chronological order, and then proceeding to the next lower priority and connecting those applications, and so on. Citizens states that presently, there are 225 applications requesting natural gas service filed with Citizens, all of which are for residential service in Priority 1.

It is stated that in conjunction with a residential development that was commenced in Citizens' service area, a 6.5 mile, 6-inch transmission main was constructed prior to December 1974, which because of the lack of supply, is being utilized at less than one percent of its capacity. Citizens indicates that the gas distribution system was installed in one unit of this development and currently the piping is in place for an additional 239 residences. Citizens anticipates the following additional demands for Priority 1 service:

1979	*1980*	*1981*	*1982*
425	295	326	361

Citizens accordingly requests an increase in the base volumes of natural gas which it is entitled to receive from El Paso to enable it to satisfy the increase in demand anticipated through 1982.

Citizens presents the following information as required by Section 2.78(b) of the Commission's General Policy and Interpretations:

1. (a) Citizens is not requesting any increase in peak day entitlement.

(b) Citizens is requesting an increase in the base volumes to which it is entitled. The annual and monthly increases in amounts of natural gas deliveries requested are as follows:

1,000 ft³

Month	1979	1980	1981
January	0	11,480	16,678
February	0	9,546	13,868
March	0	8,410	12,218
April	0	5,310	7,715
May	0	2,718	3,949
June	1,011	1,713	2,489
July	1,029	1,743	2,532
August	1,029	1,743	2,532
September	1,029	1,743	2,532
October	1,978	3,351	4,868
November	4,589	7,774	11,294
December	6,520	11,045	16,047
Total	17,185	66,576	96,722

(c) All deliveries would be made under El Paso's rate schedule A-1 and B-2, pursuant to Service Agreement between Citizens and El Paso dated September 20, 1968.

2. The relief is requested for permanent duration.

3. All Citizens' natural gas requirements are in the residential and small commercial end-use category. See schedule under paragraph 4.

4. The natural gas requested would be utilized for residential and small commercial uses. The scheduling with and without the relief requested in this end-use is:

Residential and Small Commercial (Mcf)

	1979		1980		1981	
	With relief	Without relief	With relief	Without relief	With relief	Without relief
January	85,249	85,249	96,729	85,249	101,927	85,249
February	73,405	73,405	82,951	73,405	87,273	73,405
March	51,376	51,376	59,786	51,376	63,594	51,376
April	35,791	35,791	41,101	35,791	43,506	35,791
May	28,492	28,492	31,210	28,492	32,441	28,492
June	23,302	22,309	24,022	22,309	24,798	22,309
July	23,053	22,024	23,767	22,024	24,556	22,024
August	23,294	22,265	24,008	22,265	24,797	22,265
September	22,787	21,758	23,501	21,758	24,290	21,758
October	32,033	30,055	33,406	30,055	34,923	30,055
November	67,403	62,820	90,594	62,820	74,114	62,820
December	93,069	86,549	97,594	86,549	101,596	86,549

5. The estimated peak day volumes of natural gas which would be available for this use with and without the relief requested from all sources of supply for the periods specified is 6445 Mcf. The monthly volumes are as shown in the schedule under pargraph 4 hereof.

6, 7. The existing alternate fuels available in Citizens' service area are liquid propane through independent dealers and electricity. There are no oil distributors in Citizens' service area. Realistically, Citizens' residential and small commercial consumers do not have alternate fuel capabilities, it is asserted. Such consumers cannot practicably be interrupted, nor curtailed, nor can they substitute fuels intermittently for their natural gas uses.

8. The current cost per million Btu's for natural gas supplies and alternate fuel supplies available to consumers in the vicinity of Citizens' service area in Santa Cruz County, Arizona, are estimated to be:

Natural gas	$4.30
Bottled propane	5.30
Electricity:	
Residential schedule	19.22
Small commercial schedule	21.27

9. There are no natural gas pipelines other than El Paso serving Citizens' area. Citizens has sought and evaluated alternatives for a supplemental gas supply including installation of a liquid propane-air plant, and the purchase of its own natural gas reserves. None of those alternatives are economically feasible, it is stated.

Citizens is in the process of negotiating for seasonal capability to use a propane-air plant located near Citizens' service area to convert liquid propane to gas to be delivered to Citizens by displacement and is seeking a liquid propane allocation from the Department of Energy through a supplier in the area. The use of this plant would not be firmly committed to Citizens, but Citizens could only use it on an if and when available basis. The primary purpose of this arrangement would be to meet the requirements of existing

customers resulting from colder than normal weather.

10. With regard to conservation activities, Citizens has curtailed the use of natural gas for mantle-type lamps and decorative flares, and otherwise complies with the applicable rules promulgated by the Arizona Corporation Commission.

Citizens has a currently effective curtailment program on file with and approved by the Arizona Corporation Commission, which tracks the curtailment program of El Paso. There is no flexibility available to Citizens in administration of curtailment by effectuating curtailment to industrial customers for the reason that Citizens does not have any industrial customers. As previously indicated, all of Citizens' customers are in the residential and small commercial end-use category.

Any person desiring to be heard or to make any protest with reference to said petition should on or before July 17, 1979, file with the Federal Energy Regulatory Commission, Washington, D.C. 20426, a petition to intervene or a protest in accordance with the requirements of the Commission's Rules of Practice and Procedure (18 CFR 1.8 or 1.10). All protests filed with the Commission will be considered by it in determining the appropriate action to be taken but will not serve to make the protestants parties to the proceeding. Any person wishing to become a party to a proceeding or to participate as a party in any hearing therein must file a petition to intervene in accordance with the Commission's Rules.

Kenneth F. Plumb,

Secretary.

[FR Doc. 79-20803 Filed 7-5-79; 8:45 am]

BILLING CODE 6450-01-M

Kansas et al.; Determinations by Jurisdictional Agencies Under the Natural Gas Policy Act of 1978

June 27, 1979.

The Federal Energy Regulatory Commission received notices from the jurisdictional agencies listed below of determinations pursuant to 18 CFR 274.104 and applicable to the indicated wells pursuant to the Natural Gas Policy Act of 1978.

Kansas Corporation Commission

1. Control Number (F.E.R.C./State)
2. API well number
3. Section of NGPA
4. Operator
5. Well name
6. Field or OCS area name
7. County, State or Block No.
8. Estimated annual volume
9. Date received at FERC
10. Purchaser(s)

1. 79-08136
2. 15-007-00000- -
3. 108 Denied
4. Beren Corporation
5. Cook A #1
6. Driftwood
7. Barber, KS
8. 14.6 million cubic feet
9. June 11, 1979
10. Cities Service Gas Co.

Louisiana Office of Conservation

1. Control Number (F.E.R.C./State)
2. API well number
3. Section of NGPA
4. Operator
5. Well name
6. Field or OCS area name
7. County, State or Block No.
8. Estimated annual volume
9. Date received at FERC
10. Purchaser(s)

1. 79-07959
2. 17-067-20190- -
3. 108
4. Primos Production Co.
5. Tensas Delta #54
6. Monroe Gas Field
7. Morehouse, LA
8. 3.2 million cubic feet
9. June 8, 1979
10. United Gas Pipeline

1. 79-07960
2. 17-011-20269- -
3. 103
4. Sun Oil Company
5. WX A RA SUR W T English #1
6. Bear
7. Beauregard, LA
8. 43.0 million cubic feet
9. June 8, 1979
10. Transcontinental Gas Pipe Line Corp.

1. 79-07961
2. 17-027-20406- -
3. 103
4. Enserch Exploration Inc.
5. J T Meadors Estate #1
6. Oaks (Smackover)
7. Claiborne, LA
8. 57.0 million cubic feet
9. June 8, 1979
10. Louisiana Gas Intrastate Inc.

1. 79-07962
2. 17-109-21687- -
3. 102
4. Pel-Tex Oil Company Inc.
5. LL&E No. B-48
6. Lake Hatch
7. Terrebonne, LA
8. 784.4 million cubic feet
9. June 8, 1979
10. Columbia Gas Transmission Corporation

1. 79-07963
2. 17-076-20194- -
3. 108
4. Primos Production Co.
5. Tensas Delta #58
6. Monroe Gas Field
7. Morehouse, LA
8. 11.5 million cubic feet
9. June 8, 1979
10. United Gas Pipeline

1. 79-07964
2. 17-067-20191- -
3. 108
4. Primos Production Co.
5. Tensas Delta #55
6. Monroe Gas Field
7. Morehouse, LA
8. 4.3 million cubic feet
9. June 8, 1979
10. United Gas Pipeline

1. 79-07965
2. 17-067-00331- -
3. 103
4. Primos Production Co.
5. Tensas Delta #49
6. Monroe Gas Field
7. Morehouse, LA
8. 8.4 million cubic feet
9. June 8, 1979
10. United Gas Pipeline

1. 79-07966
2. 17-031-20165- -
3. 108
4. H. M. Jarred
5. UGR RA SUD Campbell #1
6. Gahagan
7. Red River, LA
8. 4.0 million cubic feet
9. June 8, 1979
10. Louisiana Intrastate Gas Corporation

1. 79-07967
2. 17-067-00218- -
3. 108
4. IMC Exploration Company
5. Mrs. Cherrie Bernstein et al. #3
6. Monroe Gas Field
7. Morehouse, LA
8. 4.2 million cubic feet
9. June 8, 1979
10. Mid Louisiana Gas Company

1. 79-07968
2. 17-067-00270
3. 108
4. IMC Exploration Company
5. Mrs. Cherrie Bernstein et al. #2
6. Monroe Gas Field
7. Morehouse, LA
8. 5.1 million cubic feet
9. June 8, 1979
10. Mid Louisiana Gas Company

1. 79-07969
2. 17-067-20013
3. 108
4. Primos Production Company
5. Tensas Delta #53
6. Monroe Gas Field
7. Morehouse, LA
8. 7.4 million cubic feet
9. June 8, 1979
10. United Gas Pipeline

1. 79-07970
2. 17-067-20010
3. 108
4. Primos Production Company
5. Tensas Delta #50
6. Monroe Gas Field
7. Morehouse, LA
8. 3.9 million cubic feet
9. June 8, 1979
10. United Gas Pipeline

1. 79-07971
2. 17-067-2113
3. 103
4. Primos Production Company

5. Tensas Delta B #12
6. Monroe Gas Field
7. Morehouse, LA
8. 18.4 million cubic feet
9. June 8, 1979
10. United Gas Pipeline

1. 79-07972
2. 17-067-2112
3. 103
4. Primos Production Company
5. Tensas Delta B #11
6. Monroe Gas Field
7. Morehouse, LA
8. 18.4 million cubic feet
9. June 8, 1979
10. United Gas Pipeline

1. 79-07973
2. 17-097-20485
3. 103
4. Sevarg Company Inc.
5. Manuel Farms Inc. #2
6. Savoy
7. St. Landry, LA
8. 180.0 million cubic feet
9. June 8, 1979
10.

1. 79-07974
2. 17-067-20288
3. 108
4. Pennzoil Producing Co.
5. Crossett TBR & Dev Co. #170
6. Monroe
7. Morehouse, LA
8. 5.0 million cubic feet
9. June 8, 1979
10. United Gas Pipeline

1. 79-07975
2. 17-067-20286
3. 108
4. Pennzoil Producing Company
5. Crossett TBR & Dev Co. #169
6. Monroe
7. Morehouse, LA
8. 15.0 million cubic feet
9. June 8, 1979
10. United Gas Pipeline

1. 79-07976
2. 17-067-20285
3. 108
4. Pennzoil Producing Company
5. Crossett TBR & Dev Co. #168
6. Monroe
7. Morehouse, LA
8. 13.0 million cubic feet
9. June 8, 1979
10. United Gas Pipeline

1. 79-07977
2. 17-109-21703
3. 102
4. Pel-Tex Oil Co. Inc.
5. Francis Wylie Condit #1
6. Lake Hatch
7. Terrebonne, LA
8. 700.0 million cubic feet
9. June 8, 1979
10. Columbia Gas Transmission

1. 79-07978
2. 17-067-21165
3. 103
4. Primos Production Co
5. Tensas Delta E #2
6. Monroe Gas Field
7. Morehouse, LA
8. 18.4 million cubic feet
9. June 8, 1979
10. United Gas Pipeline

1. 79-07979
2. 17-109-21968
3. 103
4. The Superior Oil Company
5. VUA LL&E U 12 No. 15
6. Four Isle Dome
7. Terrebonne Parish, LA
8. 924.0 million cubic feet
9. June 8, 1979
10. United Gas Pipe Line Co

1. 79-07980
2. 17-011-20296
3. 103
4. Sun Oil Company (Delaware)
5. WX A RA SUC Mary E F Barrett Well
6. Bear
7. Beauregard, LA
8. 33.0 million cubic feet
9. June 8, 1979
10. Transcontinental Gas Pipe Line Corp

1. 79-07981
2. 17-023-21294
3. 103
4. Amoco Production Company
5. VUA Miami Corp T No. 1-D
6. South Pecan Lake
7. Cameron, LA
8. 800.0 million cubic feet
9. June 8, 1979
10. Columbia Gas Transmission Corp

1. 79-07982
2. 17-023-21314
3. 103
4. Amoco Production Company
5. Miami Corp #33
6. South Pecan Lake
7. Cameron, LA
8. .0 million cubic feet
9. June 8, 1979
10. Columbia Gas Tranmission Corp

1. 79-07983
2. 17-023-21314
3. 103
4. Amoco Production Company
5. Miami Corp #33-D
6. South Pecan Lake
7. Cameron, LA
8. 2033.0 million cubic feet
9. June 8, 1979
10. Columbia Gas Tranmission Corp

1. 79-07985
2. 17-113-20704
3. 102 103
4. Texaco Inc
5. Richard RA SUA M Richard #1
6. Grosse Isle
7. Vermilion, LA
8. 290.0 million cubic feet
9. June 8, 1979
10. Tennessee Gas Pipeline Co Dow Chemical Co

1. 79-07986
2. 17-007-20266
3. 103
4. J Aron & Co. Inc
5. OP-1 RA SUA J Aron #2
6. Oakley
7. Assumption, LA
8. 1100.0 million cubic feet
9. June 8, 1979
10. Sugar Bowl Gas Corporation

1. 79-07987
2. 17-109-21907
3. 107
4. Louisiana Land and Exploration Co
5. VU 50 LBU 39 #23-155503
6. Lake Barre
7. Terrebonne, LA
8. 114.0 million cubic feet
9. June 8, 1979
10. Texas Eastern Transmission Corp

1. 79-07988
2. 17-109-21925
3. 102
4. Pel-Tex Oil Company Inc
5. Francis Wylie Condit No. 1-D
6. Lake Hatch
7. Terrebonne, LA
8. 900.0 million cubic feet
9. June 8, 1979
10. Columbia Gas Transmission Corp

1. 79-07989
2. 17-067-00000
3. 108
4. IMC Exploration Company
5. Tensas Delta #13
6. Monroe Gas Field
7. Morehouse, LA
8. 3.3 million cubic feet
9. June 8, 1979
10. Mid Louisiana Gas Company

1. 79-07990
2. 17-067-00000
3. 108
4. IMC Exploration Company
5. Tensas Delta #12
6. Monroe Gas Field
7. Morehouse, LA
8. 2.9 million cubic feet
9. June 8, 1979
10. Mid Louisiana Gas Company

1. 79-07991
2. 17-067-00271
3. 108
4. IMC Exploration Company
5. Mrs Cherrie Berstein et al #5
6. Monroe Gas Field
7. Morehouse, LA
8. 5.5 million cubic feet
9. June 8, 1979
10. Mid Louisiana Gas Company

1. 79-07992
2. 17-067-00235
3. 108
4. IMC Exploration Company
5. Mrs Cherrie Bernstein et al #4
6. Monroe Gas Field
7. Morehouse, LA
8. 2.7 million cubic feet
9. June 8, 1979
10. Mid Louisiana Gas Company

1. 79-07993
2. 17-057-21448
3. 103
4. Louis J Roussel
5. 11200 Rasua Falgout A-1 SR 156510
6. Golden Meadow
7. Lafourche Parish, LA
8. 400.0 million cubic feet
9. June 8, 1979
10. Louisiana Intrastate Gas Corp

1. 79-07994
2. 17-075-22360
3. 102
4. Davis Oil Company

5. Morgan City Land & Fur Co No. 1
6. Point-a-la-hache
7. Plaquemines, LA
8. 400.0 million cubic feet
9. June 8, 1979
10. Southern Natural Gas Company

1. 79-07995
2. 17-023-21225
3. 103
4. Amoco Production Company
5. Plan 4 RA Sub Vincent Heirs 8
6. East Holly Beach
7. Cameron, LA
8. 310.0 million cubic feet
9. June 8, 1979
10. Natural Gas Pipeline Co of America

1. 79-07996
2. 17-023-21201
3. 103
4. Amoco Production Company
5. Lacassane Company B Well No. 11
6. South Thornwell
7. Jefferson Davis & Cala.
8. 800.0 million cubic feet
9. June 8, 1979
10. Columbia Gas Transmission Corp

1. 79-07997
2. 17-023-21309
3. 103
4. Amoco Production Company
5. Lacassane Company A Well 7
6. South Thornwell
7. Jefferson Davis & Cala.
8. 500.0 million cubic feet
9. June 8, 1979
10. Columbia Gas Transmission Corp

1. 79-07998
2. 17-053-20538
3. 103
4. Amoco Production Company
5. MGP RA SUA LA Rice Milling Co. Well 5
6. South Thornwell
7. Jefferson Davis, LA
8. 400.0 million cubic feet
9. June 8, 1979
10. Columbia Gas Transmission Corp

Mississippi Oil and Gas Board

1. Control number (F.E.R.C./State)
2. API well number
3. Section of NGPA
4. Operator
5. Well name
6. Field or OCS area name
7. County, State or block No.
8. Estimated annual volume
9. Date received at FERC
10. Purchaser(s)

1. 79-07443
2. 23-095-20234- -
3. 102 103
4. The Louisiana Land & Exploration Co
5. Lee H. Harrington No. 1 Well
6. Aberdeen Field
7. Monroe, MS
8. 41.0 million cubic feet
9. May 29, 1979
10. Texas Eastern Transmission Corp

1. 79-07444
2. 23-095-20224- -
3. 102
4. The Louisiana Land & Exploration Co
5. Minnie Plant Whitaker Well No. 1
6. Aberdeen Field
7. Monroe, MS
8. 107.0 million cubic feet
9. May 29, 1979
10. Texas Eastern Transmission Corp

1. 79-07445
2. 23-095-20225- -
3. 102 103 108
4. The Louisiana Land & Exploration Co
5. Margaret Hartwell Watkins Maute #1
6. Aberdeen Field
7. Monroe, MS
8. 96.0 million cubic feet
9. May 29, 1979
10. Texas Eastern Transmission Corp

1. 79-07446
2. 23-09502-229- -
3. 102 103
4. The Louisiana Land & Exploration Co
5. Lee H. Harrington Well No. 2
6. Aberdeen Field
7. Monroe, MS
8. 89.0 million cubic feet
9. May 29, 1979
10. Texas Eastern Transmission Corp

1. 79-07447
2. 23-065-20051- -
3. 102
4. System Fuels Inc
5. E Mikell 24-10 No. 1 Well
6. Grange
7. Jefferson Davis, MS
8. 900.0 million cubic feet
9. May 29, 1979
10. System Fuels Inc

1. 79-07448
2. 23-065-20057- -
3. 102
4. System Fuels Inc
5. E Mikell 24-6 No. 2 Well
6. Grange
7. Jefferson Davis, MS
8. 220.0 million cubic feet
9. May 29, 1979
10. System Fuels Inc

1. 79-07449
2. 23-065-20073- -
3. 102
4. System Fuels Inc
5. Buckley Estate No. 1 Well
6. Grange
7. Jefferson Davis, MS
8. 600.0 million cubic feet
9. May 29, 1979
10. System Fuels Inc

1. 79-07450
2. 23-065-20080- -
3. 102 103
4. System Fuels Inc
5. Robertson Estate 25-8 Well
6. Grange
7. Jefferson Davis, MS
8. 1400.0 million cubic feet
9. May 29, 1979
10. System Fuels Inc

1. 79-07451
2. 23-077-20017- -
3. 102 103
4. System Fuels Inc
5. Bobby Brooks 26-7 No. 1 Well
6. Grange
7. Lawrence, MS
8. 225.0 million cubic feet
9. May 29, 1979
10. System Fuels Inc

1. 79-07452A
2. 23-065-20101- -
3. 102
4. Mosbacher Production Co
5. Henry Louis Hall No. 1 20101
6. West Jaynesville Field
7 Covington & Jeff Davis, MS
8. 270.0 million cubic feet
9. May 29, 1979
10. United Gas Pipeline Co

1. 79-07452B
2. 23-065-20101- -
3. 103
4. Mosbacher Production Co
5. Henry Louis Hall No. 1 20101
6. West Jaynesville Field
7. Covington & Jeff Davis, MS
8. 270.0 million cubic feet
9. May 29, 1979
10. United Gas Pipeline Co

1. 79-07452C
2. 23-065-20101- -
3. 107
4. Mosbacher Production Co
5. Henry Louis Hall No. 1 20101
6. West Jaynesville Field
7. Covington & Jeff Davis, MS
8. 270.0 million cubic feet
9. May 29, 1979
10. United Gas Pipeline Co

1. 79-07453A
2. 23-121-20055- -
3. 107
4. Shell Oil Company
5. Garrett Unit No. 1-R
6. Thomasville
7. Rankin, MS
8. 5000.0 million cubic feet
9. May 29, 1979
10. Mississippi Power and Light Company

1. 79-07453B
2. 23-121-20060- -
3. 107
4. Shell Oil Company
5. M F Spengler et al. Unit No. 1
6. Thomasville
7. Rankin, MS
8. 5000.0 million cubic feet
9. May 29, 1979
10. Mississippi Power and Light Company

New Mexico Department of Energy and Minerals, Oil Conservation Division

1. Control Number (F.E.R.C./State)
2. API well number
3. Section of NGPA
4. Operator
5. Well name
6. Field or OCS area name
7. County, State or Block No.
8. Estimated annual volume
9. Date received at FERC
10. Purchaser(s)

1. 79-08138
2. 30-015-22372-
3. 103
4. Black River Corporation
5. BRC—Madera #1
6. South Carlsbad—Morrow
7. Eddy, NM
8. 430.0 million cubic feet
9. June 11, 1979
10. El Paso Natural Gas Company

1. 79-08139

2. 30-015-22722-
3. 103
4. Champlin Petroleum Company
5. E J Garner #1
6. Carlsbad E (Morrow)
7. Eddy, NM
8. 300.0 million cubic feet
9. June 11, 1979
10. El Paso Natural Gas Company

1. 79-08140
2. 30-015-22552-
3. 103
4. Black River Corporation
5. Miller Com #1
6. Wolfcamp Formation—Undesignated
7. Eddy, NM
8. 237.6 million cubic feet
9. June 11, 1979
10. El Paso Natural Gas Company

1. 79-08141
2. 30-025-26146-
3. 103
4. Arco Oil and Gas Company
5. State 157 D #9
6. Drinkard
7. Lea, NM
8. 40.0 million cubic feet
9. June 11, 1979
10. El Paso Natural Gas Company

1. 79-08142
2. 30-045-23338-
3. 103
4. Manana Gas Inc.
5. Bobbie Herrera #1—Pictured Cliffs
6. Aztec Pictured Cliffs
7. San Juan, NM
8. .0 million cubic feet
9. June 11, 1979
10. El Paso Natural Gas Company

1. 79-08143
2. 30-025-08799-
3. 108
4. Texas Pacific Oil Company Inc.
5. State A A/C 2 #45
6. South Eunice/7 Rivers Queen
7. Lea, NM
8. 5.5 million cubic feet
9. June 11, 1979
10. Phillips Petroleum Company

1. 79-08144
2. 30-025-10715-
3. 108
4. Texas Pacific Oil Company Inc.
5. State A A/C 1 #78
6. Langlie Mattix—7R—Queen
7. Lea, NM
8. 7.5 million cubic feet
9. June 11, 1979
10. Phillips Petroleum Company

1. 79-08145
2. 30-025-05471-
3. 108
4. Texas Pacific Oil Company Inc.
5. State V A/C 2 #5
6. Hubbs—Grayburg
7. Lea, NM
8. 2.7 million cubic feet
9. June 11, 1979
10. Phillips Petroleum Company

West Virginia Department of Mines, Oil and Gas Division

1. Control Number (F.E.R.C./State)
2. API well number
3. Section of NGPA
4. Operator
5. Well name
6. Field or OCS area name
7. County, State or Block No.
8. Estimated annual volume
9. Date received at FERC
10. Purchaser(s)

1. 79-08083
2. 47-109-005920--
3. 108
4. Ashland Exploration Inc
5. W M Ritter Lumber Co #193-032260
6. Logan Wyoming
7. Wyoming, WV
8. 8.7 million cubic feet
9. June 11, 1979
10. Consolidated Gas Supply Corp

1. 79-08084
2. 47-109-00586--
3. 108
4. Ashland Exploration Inc
5. W M Ritter Lumber Co #192-031830
6. Logan Wyoming
7. Wyoming, WV
8. 5.2 million cubic feet
9. June 11, 1979
10. Consolidated Gas Supply Corp

1. 79-08085
2. 47-109-00584--
3. 108
4. Ashland Exploration Inc
5. W M Ritter Lumber Co #191-031720
6. Logan Wyoming
7. Wyoming, WV
8. 10.4 million cubic feet
9. June 11, 1979
10. Consolidated Gas Supply Corp

1. 79-08086
2. 47-109-00571--
3. 108
4. Ashland Exploration Inc
5. W M Ritter Lumber Co #19-
6. Logan Wyoming
7. Wyoming, WV
8. 9.1 million cubic feet
9. June 11, 1979
10. Consolidated Gas Supply Corp

1. 79-08087
2. 47-109-00564--
3. 108
4. Ashland Exploration Inc
5. W M Ritter Lumber Co #186-031060
6. Logan Wyoming
7. Wyoming, WV
8. 11.9 million cubic feet
9. June 11, 1979
10. Consolidated Gas Supply Corp

1. 79-08088
2. 47-109-00545--
3. 108
4. Ashland Exploration Inc
5. W M Ritter Lumber Co #181-029810
6. Logan Wyoming
7. Wyoming, WV
8. 1.1 million cubic feet
9. June 11, 1979
10. Consolidated Gas Supply Corp

1. 79-08089
2. 47-109-00528--
3. 108
4. Ashland Exploration Inc
5. W M Ritter Lumber Co #176-027450
6. Logan Wyoming
7. Wyoming, WV
8. 4.3 million cubic feet
9. June 11, 1979
10. Consolidated Gas Supply Corp

1. 79-80890
2. 47-109-00519--
3. 108
4. Ashland Exploration Inc
5. W M Ritter Lumber Co #174-026640
6. Logan Wyoming
7. Wyoming, WV
8. 13.7 million cubic feet
9. June 11, 1979
10. Consolidated Gas Supply Corp

1. 79-08091
2. 47-109-00514--
3. 108
4. Ashland Exploration Inc
5. W M Ritter Lumber Co #173-026580
6. Logan Wyoming
7. Wyoming, WV
8. 7.0 million cubic feet
9. June 11, 1979
10. Consolidated Gas Supply Corp

1. 79-08092
2. 47-109-00510--
3. 108
4. Ashland Exploration Inc
5. W M Ritter Lumber Co #172-026520
6. Logan Wyoming
7. Wyoming, WV
8. 14.1 million cubic feet
9. June 11, 1979
10. Consolidated Gas Supply Corp

1. 79-08093
2. 47-109-00484--
3. 108
4. Ashland Exploration Inc
5. W M Ritter Lumber Co #164-025510
6. Logan Wyoming
7. Wyoming, WV
8. 5.5 million cubic feet
9. June 11, 1979
10. Consolidated Gas Supply Corp

1. 79-08094
2. 47-045-00318--
3. 108
4. Ashland Exploration Inc
5. Amherst Land Co #18-020020
6. Logan Wyoming
7. Logan, WV
8. 8.7 million cubic feet
9. June 11, 1979
10. Consolidated Gas Supply Corp

1. 79-08095
2. 47-045-00331--
3. 108
4. Ashland Exploration Inc
5. Amherst Land Co #19-020150
6. Logan Wyoming
7. Logan, WV
8. 8.7 million cubic feet
9. June 11, 1979
10. Consolidated Gas Supply Corp

1. 79-08096
2. 47-045-00347--
3. 108
4. Ashland Exploration Inc
5. Amherst Land Co #20-020650
6. Logan Wyoming
7. Logan, WV
8. 8.7 million cubic feet
9. June 11, 1979

10. Consolidated Gas Supply Corp
1. 79-08097
2. 47-045-00348--
3. 108
4. Ashland Exploration Inc
5. Amherst Land Co #21-020660
6. Logan Wyoming
7. Logan, WV
8. 8.7 million cubic feet
9. June 11, 1979
10. Consolidated Gas Supply Corp
1. 79-08098
2. 47-045-00363--
3. 108
4. Ashland Exploration Inc
5. Amherst Land Co #23-021020
6. Logan Wyoming
7. Logan, WV
8. 8.7 million cubic feet
9. June 11, 1979
10. Consolidated Gas Supply Corp
1. 79-08100
2. 47-045-00361--
3. 108
4. Ashland Exploration Inc
5. Elk Creek Coal Land Co #6-021670
6. Logan Wyoming
7. Logan, WV
8. 8.7 million cubic feet
9. June 11, 1979
10. Consolidated Gas Supply Corp
1. 79-08101
2. 47-045-00171--
3. 108
4. Ashland Exploration Inc
5. Elk Creek Coal Land Co #1-014420
6. Logan Wyoming
7. Logan, WV
8. 8.7 million cubic feet
9. June 11, 1979
10. Consolidated Gas Supply Corp
1. 79-08102
2. 47-045-00259--
3. 108
4. Ashland Exploration Inc
5. Amherst Land Co #8-018010
6. Logan Wyoming
7. Logan, WV
8. 8.7 million cubic feet
9. June 11, 1979
10. Consolidated Gas Supply Corp
1. 79-08103
2. 47-045-00264--
3. 108
4. Ashland Exploration Inc
5. Amherst Land Co #18-020020
6. Logan Wyoming
7. Logan, WV
8. 8.7 million cubic feet
9. June 11, 1979
10. Consolidated Gas Supply Corp
1. 79-08104
2. 47-045-00270--
3. 108
4. Ashland Exploration Inc
5. Amherst Land Co #10-018610
6. Logan Wyoming
7. Logan, WV
8. 8.7 million cubic feet
9. June 11, 1979
10. Consolidated Gas Supply Corp
1. 79-08105
2. 47-109-00459--
3. 108
4. Ashland Exploration Inc
5. Anne H Stokes #4-024760
6. Logan Wyoming
7. Wyoming, WV
8. 3.7 million cubic feet
9. June 11, 1979
10. Consolidated Gas Supply Corp
1. 79-08106
2. 47-045-00502--
3. 108
4. Ashland Exploration Inc
5. Altizer Coal Land Co #1-024360
6. Logan Wyoming
7. Logan, WV
8. 7.7 million cubic feet
9. June 11, 1979
10. Consolidated Gas Supply Corp
1. 79-08107
2. 47-045-00659--
3. 108
4. Ashland Exploration Inc
5. Altizer Coal Land Co #3-026130
6. Logan Wyoming
7. Logan, WV
8. 7.1 million cubic feet
9. June 11, 1979
10. Consolidated Gas Supply Corp
1. 79-08108
2. 47-045-00718--
3. 108
4. Ashland Exploration Inc
5. Altizer Coal Land Co #4-026970
6. Logan Wyoming
7. Logan, WV
8. 4.1 million cubic feet
9. June 11, 1979
10. Consolidated Gas Supply Corp
1. 79-08109
2. 47-045-00720--
3. 108
4. Ashland Exploration Inc
5. Altizer Coal Land Co #5-027120
6. Logan Wyoming
7. Logan, WV
8. 13.5 million cubic feet
9. June 11, 1979
10. Consolidated Gas Supply Corp
1. 79-08110
2. 47-045-00819--
3. 108
4. Ashland Exploration Inc
5. Elk Creek Coal Land Co #16-035770
6. Logan Wyoming
7. Logan, WV
8. 13.1 million cubic feet
9. June 11, 1979
10. Consolidated Gas Supply Corp
1. 79-08111
2. 47-045-00705--
3. 108
4. Ashland Exploration Inc
5. Elk Creek Coal Land Co #14-026820
6. Logan Wyoming
7. Logan, WV
8. 4.0 million cubic feet
9. June 11, 1979
10. Consolidated Gas Supply Corp
1. 79-08112
2. 47-045-00735--
3. 108
4. Ashland Exploration Inc
5. Elk Creek Coal Land Co #15-027460
6. Logan Wyoming
7. Logan, WV
8. 9.1 million cubic feet
9. June 11, 1979
10. Consolidated Gas Supply Corp
1. 79-03113
2. 47-045-00420--
3. 103
4. Ashland Exploration Inc
5. Elk Creek Coal Land Co #7—022200
6. Logan, Wyoming
7. Logan, WV
8. 5.5 million cubic feet
9. June 11, 1979
10. Consolidated Gas Supply Corp
1. 79-08114
2. 47-045-00439--
3. 103
4. Ashland Exploration Inc
5. Elk Creek Coal Land Co #8—023130
6. Logan, Wyoming
7. Logan, WV
8. 8.7 million cubic feet
9. June 11, 1979
10. Consolidated Gas Supply Corp
1. 79-03115
2. 47-045-00497--
3. 103
4. Ashland Exploration Inc
5. Amherst Land Co #35—024120
6. Logan, Wyoming
7. Logan, WV
8. 8.7 million cubic feet
9. June 11, 1979
10. Consolidated Gas Supply Corp
1. 79-08116
2. 47-045-00560--
3. 108
4. Ashland Exploration Inc
5. Amherst Land Co #37—025080
6. Logan, Wyoming
7. Logan, WV
8. 5.1 million cubic feet
9. June 11, 1979
10. Consolidated Gas Supply Corp
1. 79-03117
2. 47-045-00658--
3. 103
4. Ashland Exploration Inc
5. Amherst Land Co #42—026100
6. Logan, Wyoming
7. Logan, WV
8. 5.8 million cubic feet
9. June 11, 1979
10. Consolidated Gas Supply Corp
1. 79-03118
2. 47-109-00613--
3. 103 denied
4. Ashland Exploration Inc
5. W M Ritter Lumber Co #193—033470
6. Logan, Wyoming
7. Logan, WV
8. 17.4 million cubic feet
9. June 11, 1979
10. Consolidated Gas Supply Corp
1. 79-03119
2. 47-109-00726--
3. 103 denied
4. Ashland Exploration Inc
5. W M Ritter Lumber Co #218—050470
6. Logan, Wyoming
7. Wyoming, WV
8. 21.0 million cubic feet
9. June 11, 1979
10. Consolidated Gas Supply Corp

1. 79-08120
2. 47-109-00727- -
3. 108
4. Ashland Exploration Inc
5. W M Ritter Lumber Co #219—050480
6. Logan, Wyoming
7. Wyoming, WV
8. 13.7 million cubic feet
9. June 11, 1979
10. Consolidated Gas Supply Corp

1. 79-08121
2. 47-109-00675- -
3. 108
4. Ashland Exploration Inc
5. W M Ritter Lumber Co #213—042400
6. Logan, Wyoming
7. Wyoming, WV
8. 15.9 million cubic feet
9. June 11, 1979
10. Consolidated Gas Supply Corp

1. 79-08122
2. 47-109-00676- -
3. 108
4. Ashland Exploration Inc
5. W M Ritter Lumber Co #214—042820
6. Logan, Wyoming
7. Wyoming, WV
8. 17.4 million cubic feet
9. June 11, 1979
10. Consolidated Gas Supply Corp

1. 79-08123
2. 47-109-00658- -
3. 108
4. Ashland Exploration Inc
5. W M Ritter Lumber Co #212—039650
6. Logan, Wyoming
7. Wyoming, WV
8. 2.4 million cubic feet
9. June 11, 1979
10. Consolidated Gas Supply Corp

1. 79-08124
2. 47-109-00646- -
3. 108
4. Ashland Exploration Inc
5. W M Ritter Lumber Co #209—036410
6. Logan, Wyoming
7. Wyoming, WV
8. 2.7 million cubic feet
9. June 11, 1979
10. Consolidated Gas Supply Corp

1. 79-08125
2. 47-109-00645- -
3. 108
4. Ashland Exploration Inc
5. W M Ritter Lumber Co #210—036420
6. Logan, Wyoming
7. Wyoming, WV
8. 12.9 million cubic feet
9. June 11, 1979
10. Consolidated Gas Supply Corp

1. 79-08126
2. 47-109-00642- -
3. 108
4. Ashland Exploration Inc
5. W M Ritter Lumber Co #207—035960
6. Logan, Wyoming
7. Wyoming, WV
8. 8.5 million cubic feet
9. June 11, 1979
10. Consolidated Gas Supply Corp

1. 79-08127
2. 47-045-00755- -
3. 108
4. Ashland Exploration Inc
5. Amherst Land Co #43—029360
6. Logan, Wyoming
7. Logan, WV
8. 3.6 million cubic feet
9. June 11, 1979
10. Consolidated Gas Supply Corp

1. 79-08128
2. 47-045-00618- -
3. 108
4. Ashland Exploration Inc
5. Amherst Land Co #39—025720
6. Logan, Wyoming
7. Logan, WV
8. 4.0 million cubic feet
9. June 11, 1979
10. Consolidated Gas Supply Corp

1. 79-08129
2. 47-045-00703- -
3. 108
4. Ashland Exploration Inc
5. Elk Creek Coal Land Co #13—026780
6. Logan, Wyoming
7. Logan, WV
8. 1.9 million cubic feet
9. June 11, 1979
10. Consolidated Gas Supply Corp

1. 79-08130
2. 47-109-00417- -
3. 108
4. Ashland Exploration Inc
5. Anne H Stokes #2—022290
6. Logan, Wyoming
7. Wyoming, WV
8. 3.7 million cubic feet
9. June 11, 1979
10. Consolidated Gas Supply Corp

1. 79-08131
2. 47-059-00763- -
3. 108
4. Ashland Exploration Inc
5. Elk Creek Coal Land Co #20—039500
6. Logan, Wyoming
7. Mingo, WV
8. 21.1 million cubic feet
9. June 11, 1979
10. Consolidated Gas Supply Corp

1. 79-08132
2. 47-045-00829- -
3. 108
4. Ashland Exploration Inc
5. Elk Creek Coal Land Co #19—036050
6. Logan, Wyoming
7. Logan, WV
8. 13.0 million cubic feet
9. June 11, 1979
10. Consolidated Gas Supply Corp

1. 79-08133
2. 47-059-00751- -
3. 108
4. Ashland Exploration Inc
5. Elk Creek Coal Land Co #18—035720
6. Logan, Wyoming
7. Mingo, WV
8. 13.8 million cubic feet
9. June 11, 1979
10. Consolidated Gas Supply Corp

1. 79-08134
2. 47-045-00195- -
3. 108
4. Ashland Exploration Inc
5. Elk Creek Coal Land Co #2—014980
6. Logan, Wyoming
7. Logan, WV
8. 8.7 million cubic feet
9. June 11, 1979
10. Consolidated Gas Supply Corp

1. 79-08135
2. 47-045-00243- -
3. 108
4. Ashland Exploration Inc
5. Amherst Land Co #4—017320
6. Logan, Wyoming
7. Logan, WV
8. 8.7 million cubic feet
9. June 11, 1979
10. Consolidated Gas Supply Corp

1. 79-08146
2. 47-045-00244- -
3. 108
4. Ashland Exploration Inc
5. Amherst Land Co #5—017420
6. Logan, Wyoming
7. Logan, WV
8. 8.7 million cubic feet
9. June 11, 1979
10. Consolidated Gas Supply Corp

1. 79-08147
2. 47-045-00115- -
3. 108
4. Ashland Exploration Inc
5. Amherst Land Co #2—017300
6. Logan, Wyoming
7. Logan, WV
8. 8.7 million cubic feet
9. June 11, 1979
10. Consolidated Gas Supply Corp

1. 79-08148
2. 47-109-00435- -
3. 108
4. Ashland Exploration Inc
5. Anne H Stokes #3—023770
6. Logan, Wyoming
7. Wyoming, WV
8. 3.7million cubic feet
9. June 11, 1979
10. Consolidated Gas Supply Corp

1. 79-08149
2. 47-045-00245- -
3. 108
4. Ashland Exploration Inc
5. Amherst Land Co #6—017430
6. Logan, Wyoming
7. Logan, WV
8. 8.7 million cubic feet
9. June 11, 1979
10. Consolidated Gas Supply Corp

1. 79-08150
2. 47-045-00242- -
3. 108
4. Ashland Exploration Inc
5. Amherst Land Co #3—017310
6. Logan, Wyoming
7. Logan, WV
8. 8.7 million cubic feet
9. June 11, 1979
10. Consolidated Gas Supply Corp

1. 79-08151
2. 47-045-00092- -
3. 108
4. Ashland Exploration Inc
5. Amherst Land Co #1—017290
6. Logan, Wyoming
7. Logan, WV
8. 8.7 million cubic feet
9. June 11, 1979
10. Consolidated Gas Supply Corp

1. 79-08152

2. 47-045-00257- -
3. 108
4. Ashland Exploration Inc
5. Amherst Land Co #7—017940
6. Logan, Wyoming
7. Logan, WV
8. 8.7 million cubic feet
9. June 11, 1979
10. Consolidated Gas Supply Corp

1. 79-08153
2. 47-045-00289- -
3. 108
4. Ashland Exploration Inc
5. Amherst Land Co #11—019220
6. Logan, Wyoming
7. Logan, WV
8. 8.7 million cubic feet
9. June 11, 1979
10. Consolidated Gas Supply Corp

1. 79-08154
2. 47-045-00291- -
3. 108
4. Ashland Exploration Inc
5. Amherst Land Co #13—019240
6. Logan, Wyoming
7. Logan, WV
8. 8.7 million cubic feet
9. June 11, 1979
10. Consolidated Gas Supply Corp

1. 79-08155
2. 47-045-00292- -
3. 108
4. Ashland Exploration Inc
5. Amherst Land Co #14—019330
6. Logan, Wyoming
7. Logan, WV
8. 8.7 million cubic feet
9. June 11, 1979
10. Consolidated Gas Supply Corp

1. 79-08156
2. 47-045-00316- -
3. 108
4. Ashland Exploration Inc
5. Amherst Land Co #16—019930
6. Logan, Wyoming
7. Logan, WV
8. 8.7 million cubic feet
9. June 11, 1979
10. Consolidated Gas Supply Corp

1. 79-08157
2. 47-045-00317- -
3. 108
4. Ashland Exploration Inc
5. Amherst Land Co #17—020010
6. Logan, Wyoming
7. Logan, WV
8. 8.7 million cubic feet
9. June 11, 1979
10. Consolidated Gas Supply Corp

1. 79-8099
2. 47-045-00369
3. 108
4. Ashland Exploration Inc
5. Amherst Land Co #24
6. Logan, Wyoming
7. Logan, WV
8. 8.7 million cubic feet
9. June 11, 1979
10. Consolidated Gas Supply Corp

U.S. Geological Survey, Albuquerque, N. Mex.

1. Control Number (F.E.R.C./State)
2. API well number
3. Section of NGPA
4. Operator
5. Well name
6. Field or OCS area name
7. County, State or block No.
8. Estimated annual volume
9. Date received at FERC
10. Purchaser(s)

1. 79-07999
2. 30-045-20292-0000-0
3. 108
4. El Paso Natural Gas Company
5. Johnson #2
6. Fulcher Kutz-Pictured Cliffs Gas
7. San Juan, NM
8. 15.7 million cubic feet
9. June 8, 1979
10. El Paso Natural Gas Company

1. 79-08000
2. 30-045-05467-0000-0
3. 108
4. El Paso Natural Gas Company
5. Quitzau #10
6. Ballard-Pictured Cliffs Gas
7. San Juan, NM
8. 5.0-million cubic feet
9. June 8, 1979
10. El Paso Natural Gas Company

1. 79-08001
2. 30-045-09438-0000-0
3. 108
4. El Paso Natural Gas Company
5. Schumacher #9
6. Blanco-Mesaverde Gas
7. San Juan, NM
8. 13.0 million cubic feet
9. June 8, 1979
10. El Paso Natural Gas Company

1. 79-08002
2. 30-045-09544-0000-0
3. 108
4. El Paso Natural Gas Company
5. Schumacher #8
6. Aztec-Pictured Cliffs Gas
7. San Juan, NM
8. 2.0 million cubic feet
9. June 8, 1979
10. El Paso Natural Gas Company

1. 79-08003
2. 30-045-09545-0000-0
3. 108
4. El Paso Natural Gas Company
5. Schumacher #7
6. Aztec-Pictured Cliffs Gas
7. San Juan, NM
8. 2.0 million cubic feet
9. June 8, 1979
10. El Paso Natural Gas Company

1. 79-08004
2. 30-045-11600-0000-0
3. 108
4. El Paso Natural Gas Company
5. Huerfano Unit #143
6. Basin-Dakota Gas
7. San Juan, NM
8. 3.3 million cubic feet
9. June 8, 1979
10. El Paso Natural Gas Company, Northwest Pipeline Corp.

1. 79-08005
2. 30-045-03447-0000-0
3. 108
4. El Paso Natural Gas Company
5. Schumacher #3
6. Aztec-Pictured Cliffs Gas
7. San Juan, NM
8. 1.5 million cubic feet
9. June 8, 1979
10. El Paso Natural Gas Company

1. 79-08006
2. 30-039-20978-0000-0
3. 108
4. El Paso Natural Gas Company
5. Canyon Largo Unit #264
6. Ballard-Pictured Cliffs Gas
7. Rio Arriba, NM
8. 6.0 million cubic feet
9. June 8, 1979
10. El Paso Natural Gas Company

1. 79-08007
2. 30-045-21619-0000-0
3. 108
4. El Paso Natural Gas Company
5. Nye #13
6. Aztec-Fruitland Gas
7. San Juan, NM
8. 13.1 million cubic feet
9. June 8, 1979
10. El Paso Natural Gas Company

1. 79-08008
2. 30-045-21432-0000-0
3. 108
4. El Paso Natural Gas Company
5. Forrest #3
6. Aztec-Pictured Cliffs Gas
7. San Juan, NM
8. 23.0 million cubic feet
9. June 8, 1979
10. El Paso Natural Gas Company

1. 79-08009
2. 30-045-21458-0000-0
3. 108
4. El Paso Natural Gas Company
5. Hubbell #13
6. Aztec-Fruitland Gas
7. San Juan, NM
8. 15.3 million cubic feet
9. June 8, 1979
10. El Paso Natural Gas Company

1. 79-08010
2. 30-045-21456-0000-0
3. 108
4. El Paso Natural Gas Company
5. Lloyd B #4
6. Bloomfield-Chacra Gas
7. San Juan, NM
8. 11.0 million cubic feet
9. June 8, 1979
10. El Paso Natural Gas Company

1. 79-08011
2. 30-039-21020-0000-0
3. 108
4. El Paso Natural Gas Company
5. San Juan 28-7 #212
6. Largo-Chacra Gas
7. Rio Arriba, NM
8. 8.0 million cubic feet
9. June 8, 1979
10. El Paso Natural Gas Company

1. 79-08012
2. 30-045-08615-0000-0
3. 108
4. El Paso Natural Gas Company
5. Curnell #6
6. Fulcher Kutz-Pictured Cliffs Gas
7. San Juan, NM
8. 12.4 million cubic feet
9. June 8, 1979

10. El Paso Natural Gas Company
1. 79-08013
2. 30-045-07129-0000-0
3. 108
4. El Paso Natural Gas Company
5. Kutz Deep Test #2
6. Fulcher Kutz-Pictured Cliffs Gas
7. San Juan, NM
8. 11.3 million cubic feet
9. June 8, 1979
10. El Paso Natural Gas Company
1. 79-08014
2. 30-045-07296-0000-0
3. 108
4. El Paso Natural Gas Company
5. Kutz Deep Test A #1
6. Fulcher Kutz-Pictured Cliffs Gas
7. San Juan, NM
8. 4.0 million cubic feet
9. June 8, 1979
10. El Paso Natural Gas Company
1. 79-08015
2. 30-045-06291-0000-0
3. 108
4. El Paso Natural Gas Company
5. Frost #4
6. Fulcher Kutz-Pictured Cliffs Gas
7. San Juan, NM
8. 7.7 million cubic feet
9. June 8, 1979
10. El Paso Natural Gas Company
1. 79-08016
2. 30-039-06783-0000-0
3. 108
4. El Paso Natural Gas Company
5. Rincon Unit NP #186
6. Basin-Dakota Gas
7. Rio Arriba, NM
8. 6.0 million cubic feet
9. June 8, 1979
10. El Paso Natural Gas Company
1. 79-08017
2. 30-045-20625-0000-0
3. 108
4. El Paso Natural Gas Company
5. Lackey #2
6. Harris Mesa-Chacra Gas
7. San Juan, NM
8. 8.0 million cubic feet
9. June 8, 1979
10. El Paso Natural Gas Company
1. 79-08018
2. 30-045-21575-0000-0
3. 108
4. El Paso Natural Gas Company
5. Lackey #7
6. Harris Mesa-Chacra Gas
7. San Juan, NM,
8. 16.1 million cubic feet
9. June 8, 1979
10. El Paso Natural Gas Company
1. 79-08019
2. 30-045-07152-0000-0
3. 108
4. El Paso Natural Gas Company
5. Hancock B #1
6. Blanco-Mesaverde Gas
7. San Juan, NM
8. 20.0 million cubic feet
9. June 8, 1979
10. El Paso Natural Gas Company
1. 79-08020
2. 30-045-09445-0000-0
3. 108
4. El Paso Natural Gas Company
5. Schumacher #2
6. Aztec-Pictured Cliffs Gas
7. San Juan, NM
8. 2.0 million cubic feet
9. June 8, 1979
10. El Paso Natural Gas Company
1. 79-08021
2. 30-045-09552-0000-0
3. 108
4. El Paso Natural Gas Company
5. Schumacher #5
6. Aztec-Pictured Cliffs Gas
7. San Juan, NM
8. 1.0 million cubic feet
9. June 8, 1979
10. El Paso Natural Gas Company
1. 79-08022
2. 30-045-06001-0000-0
3. 108
4. Noah A. Neely
5. Navajo #1
6. Pictured Cliffs (Gas)
7. San Juan, NM
8. 3.3 million cubic feet
9. June 8, 1979
10. El Paso Natural Gas Company
1. 79-08023
2. 30-045-06078-0000-0
3. 108
4. Noah A. Neely
5. Mead B-1
6. Picture Cliffs (Gas)
7. San Juan, NM
8. 5.5 million cubic feet
9. June 8, 1979
10. El Paso Natural Gas Company
1. 79-08024
2. 30-039-05720-0000-0
3. 108
4. El Paso Natural Gas Company
5. Jicarilla B #10
6. Blanco South-Pictured Cliffs Gas
7. Rio Arriba, NM
8. 9.1 million cubic feet
9. June 8, 1979
10. El Paso Natural Gas Company
1. 79-08025
2. 30-039-60028-0000-0
3. 108
4. El Paso Natural Gas Company
5. Jicarilla P #3
6. Ballard-Pictured Cliffs Gas
7. Rio Arriba, NM
8. 7.3 million cubic feet
9. June 8, 1979
10. El Paso Natural Gas Company
1. 79-08026
2. 30-045-20589-0000-0
3. 108
4. El Paso Natural Gas Company
5. Atlantic B #10
6. Blanco-Pictured Cliffs Gas
7. San Juan, NM
8. 15.0 million cubic feet
9. June 8, 1979
10. El Paso Natural Gas Company
1. 79-08027
2. 30-039-05909-0000-0
3. 108
4. El Paso Natural Gas Company
5. Jicarilla C #7
6. Blanco South-Pictured Cliffs Gas
7. Rio Arriba, NM
8. 10.6 million cubic feet
9. June 8, 1979
10. El Paso Natural Gas Company
1. 79-08028
2. 30-045-21528-0000-0
3. 108
4. El Paso Natural Gas Company
5. El Paso 3
6. Aztec-Pictured Cliffs Gas
7. San Juan, NM
8. 11.7 million cubic feet
9. June 8, 1979
10. El Paso Natural Gas Company
1. 79-08029
2. 30-045-21189-0000-0
3. 108
4. El Paso Natural Gas Company
5. Hughes A 10
6. Blanco-Pictured Cliffs Gas
7. San Juan, NM
8. 10.2 million cubic feet
9. June 8, 1979
10. El Paso Natural Gas Company
1. 79-08030
2. 30-045-06693-0000-0
3. 108
4. El Paso Natural Gas Company
5. Pipkin 6
6. Fulcher Kutz-Pictured Cliffs Gas
7. San Juan, NM
8. 6.0 million cubic feet
9. June 8, 1979
10. El Paso Natural Gas Company
1. 79-08031
2. 30-045-06353-0000-0
3. 108
4. El Paso Natural Gas Company
5. Cleveland 7
6. Fulcher Kutz-Pictured Cliffs Gas
7. San Juan, NM
8. 4.0 million cubic feet
9. June 8, 1979
10. El Paso Natural Gas Company
1. 79-08032
2. 30-045-07451-0000-0
3. 108
4. El Paso Natural Gas Company
5. Johnston 4
6. Aztec-Pictured Cliffs Gas
7. San Juan, NM
8. 17.5 million cubic feet
9. June 8, 1979
10. El Paso Natural Gas Company
1. 79-08033
2. 30-045-21523-0000-0
3. 108
4. El Paso Natural Gas Company
5. Hancock A #7
6. Harris Mesa-Chacra Gas
7. San Juan, NM
8. 9.1 million cubic feet
9. June 8, 1979
10. El Paso Natural Gas Company
1. 79-08034
2. 30-045-20784-0000-0
3. 108
4. El Paso Natural Gas Company
5. Atlantic B #11
6. Blanco-Pictured Cliffs Gas
7. San Juan, NM
8. 11.3 million cubic feet
9. June 8, 1979
10. El Paso Natural Gas Company

1. 79-08035
2. 30-045-09720-0000-0
3. 108
4. El Paso Natural Gas Company
5. Storey B #6
6. Aztec-Pictured Cliffs Gas
7. San Juan, NM
8. 16.8 million cubic feet
9. June 8, 1979
10. El Paso Natural Gas Company

1. 79-08036
2. 30-045-11575-0000-0
3. 108
4. El Paso Natural Gas Company
5. Mudge #28
6. Aztec-Pictured Cliffs Gas
7. San Juan, NM
8. 9.0 million cubic feet
9. June 8, 1979
10. El Paso Natural Gas Company

1. 79-08037
2. 30-045-11712-0000-0
3.108
4. El Paso Natural Gas Company
5. Bolack B #5
6. Blanco South-Pictured Cliffs Gas
7. San Juan, NM
8. 18.0 million cubic feet
9. June 8, 1979
10. El Paso Natural Gas Company

1. 79-08038
2. 30-039-05371-0000-0
3. 108
4. El Paso Natural Gas Company
5. Hill 3
6. Blanco South-Pictured Cliffs Gas
7. Rio Abria, NM
8. 2.9 million cubic feet
9. June 8, 1979
10. El Paso Natural Gas Company

1. 79-08039
2. 30-045-10921-0000-0
3. 108
4. El Paso Natural Gas Company
5. Mudge 21
6. Basin-Dakota Gas
7. San Juan, NM
8. 8.0 million cubic feet
9. June 8, 1979
10. El Paso Natural Gas Company

1. 79-08040
2. 30-045-09240-0000-0
3. 108
4. El Paso Natural Gas Company
5. Murphy C 1
6. Aztec-Pictured Cliffs Gas
7. San Juan, NM
8. 15.0 million cubic feet
9. June 8, 1979
10. El Paso Natural Gas Company

1. 79-08041
2. 30-039-60030-0000-0
3. 108
4. El Paso Natural Gas Company
5. Jicarilla P #1
6. Ballard-Pictured Cliffs Gas
7. Rio Abria, NM
8. 9.0 million cubic feet
9. June 8, 1979
10. El Paso Natural Gas Company

1. 79-08042
2. 30-045-60210-0000-0
3. 108
4. El Paso Natural Gas Company
5. Storey B #1
6. Blanco-Mesaverde Gas
7. San Juan, NM
8. 11.0 million cubic feet
9. June 8, 1979
10. El Paso Natural Gas Company

1. 79-08043
2. 30-045-06328-0000-0
3. 108
4. El Paso Natural Gas Company
5. Cleveland #4
6. Fulcher Kutz-Pictured Cliffs Gas
7. San Juan, NM
8. 6.9 million cubic feet
9. June 8, 1979
10. El Paso Natural Gas Company

1. 79-08044
2. 30-045-06293-0000-0
3. 108
4. El Paso Natural Gas Company
5. Frost 5
6. Fulcher Kutz-Pictured Cliffs Gas
7. San Juan, NM
8. 15.3 million cubic feet
9. June 8, 1979
10. El Paso Natural Gas Company

1. 79-08045
2. 30-045-07005-0000-0
3. 108
4. El Paso Natural Gas Company
5. Omler 1
6. Undesignated NM—Farmington
7. San Juan, NM
8. 1.0 million cubic feet
9. June 8, 1979
10. El Paso Natural Gas Company

1. 79-08046
2. 30-045-21562-0000-0
3. 108
4. El Paso Natural Gas Company
5. Lackey #9
6. Harris Mesa-Chacra Gas
7. San Juan, NM
8. 17.2 million cubic feet
9. June 8, 1979
10. El Paso Natural Gas Company

1. 79-08047
2. 30-039-21411-0000-1
3. 103
4. Dugan Production Corp
5. Sherman Edward 2B PC
6. Gobernador PC
7. Rio Arriba, NM
8. 76.0 million cubic feet
9. June 8, 1979
10. Northwest Pipeline Corp

1. 79-08048
2. 30-039-21411-0000-2
3. 103
4. Dugan Product Corp
5. Sherman Edward 2R MV
6. Gobernador Mesaverde
7. Rio Arriba, NM
8. 76.0 million cubic feet
9. June 8, 1979
10. Northwest Pipeline Corp

1. 79-08049
2. 30-045-21875-0000-0
3. 108
4. Dugan Product Corp
5. Ojo Ho #2
6. Waw Fruitland PC
7. San Juan, NM
8. 1.1 million cubic feet
9. June 8, 1979
10. El Paso Natural Gas

1. 79-08050
2. 30-045-21874-0000-0
3. 108
4. Dugan Production Corp
5. Ojo Ho #1
6. Waw Fruitland PC
7. San Juan, NM
8 3.2 million cubic feet
9. June 8, 1979
10. El Paso Natural Gas

1. 79-08051
2. 30-045-21854-0000-0
3. 108
4. Dugan Production Corp
5. Ojo-He-He #7
6. Waw Fruitland PC
7. San Juan, NM
8. 4.3 million cubic feet
9. June 8, 1979
10. El Paso Natural Gas

1. 79-08052
2. 30-045-21858-0000-0
3. 108
4. Dugan Production Corp
5. Ojo-He-He #6
6. Waw Fruitland PC
7. San Juan, NM
8. 3.0 million cubic feet
9. June 8, 1979
10. El Paso Natural Gas

1. 79-08053
2. 30-045-21855-0000-0
3. 108
4. Dugan Production Corp
5. Ojo-He-He #6
6. Waw Fruitland PC
7. San Juan, NM
8. 5.4 million cubic feet
9. June 8, 1979
10. El Paso Natural Gas

1. 79-08054
2. 30-045-21856-0000-0
3. 108
4. Dugan Production Corp
5. Ojo-He-He #3
6. Waw Fruitland PC
7. San Juan, NM
8. 10.5 million cubic feet
9. June 8, 1979
10. El Paso Natural Gas

1. 79-08055
2. 30-045-22414-0000-0
3. 103
4. Dugan Production Corp
5. Ojo-He-He #4
6. Waw Fruitland PC
7. San Juan, NM
8. 5.4 million cubic feet
9. June 8, 1979
10. El Paso Natural Gas

1. 79-08056
2. 30-045-21857-0000-0
3. 103
4. Dugan Production Corp
5. Ojo-He-He #2
6. Waw Fruitland PC
7. San Juan, NM
8. 3.8 million cubic feet
9. June 8, 1979
10. El Paso Natural Gas

1. 79-08057
2. 30-039-06404-0000-0

3. 108
4. El Paso Natural Gas Company
5. Reams #2
6. Blanco South-Pictured Cliffs Gas
7. Rio Arriba, NM
8. 14.0 million cubic feet
9. June 8, 1979
10. El Paso Natural Gas Company

1. 79-08058
2. 30-045-05819-0000-0
3. 108
4. El Paso Natural Gas Company
5. Payne A #1
6. Ballard-Pictured Cliffs Gas
7. San Juan, NM
8. 8.8 million cubic feet
9. June 8, 1979
10. El Paso Natural Gas Company

1. 79-08059
2. 30-039-82404-0000-0
3. 108
4. El Paso Natural Gas Company
5. Rincon Unit NP #23
6. Blanco-Mesaverde Gas
7. Rio Arriba, NM
8. 8.8 million cubic feet
9. June 8, 1979
10. El Paso Natural Gas Company

1. 79-08060
2. 30-045-09709-0000-0
3. 108
4. El Paso Natural Gas Company
5. Sullivan #1
6. Blanco-Mesaverde Gas
7. San Juan, NM
8. 9.0 million cubic feet
9. June 8, 1979
10. El Paso Natural Gas Company

1. 79-08061
2. 30-045-07265-0000-0
3. 108
4. El Paso Natural Gas Company
5. Kutz Deep Test #1
6. Fulcher Kutz-Pictured Cliffs Gas
7. San Juan, NM
8. 2.0 million cubic feet
9. June 8, 1979
10. El Paso Natural Gas Company

1. 79-08062
2. 30-045-06797-0000-0
3. 108
4. El Paso Natural Gas Company
5. Feasel #1
6. Fulcher Kutz-Pictured Cliffs Gas
7. San Juan, NM
8. 1.5 million cubic feet
9. June 8, 1979
10. El Paso Natural Gas Company

1. 79-08063
2. 30-045-07143-0000-0
3. 108
4. El Paso Natural Gas Company
5. Hancock #1
6. Aztec-Pictured Cliffs Gas
7. San Juan, NM
8. 11.0 million cubic feet
9. June 8, 1979
10. El Paso Natural Gas Company

1. 79-08064
2. 30-045-09555-0000-0
3. 108
4. El Paso Natural Gas Company
5. Schumacher #6
6. Aztec-Pictured Cliffs Gas
7. San Juan, NM
8. 2.9 million cubic feet
9. June 8, 1979
10. El Paso Natural Gas Company

1. 79-08065
2. 30-045-06332-0000-0
3. 108
4. El Paso Natural Gas Company
5. Gordon 5
6. Fulcher Kutz-Pictured Cliffs Gas
7. San Juan, NM
8. 7.0 million cubic feet
9. June 8, 1979
10. El Paso Natural Gas Company

1. 79-08066
2. 30-039-20647-0000-0
3. 108
4. El Paso Natural Gas Company
5. San Juan 27-5 Unit #161
6. Tapacito-Pictured Cliffs Gas
7. Rio Arriba, NM
8. 20.0 million cubic feet
9. June 8, 1979
10. El Paso Natural Gas Company, Northwest Pipeline Corp.

1. 79-08067
2. 30-045-06681-0000-0
3. 108
4. El Paso Natural Gas Company
5. Turner Hughes #11
6. Blanco South-Pictured Cliffs Gas
7. San Juan, NM
8. 4.0 million cubic feet
9. June 8, 1979
10. El Paso Natural Gas Company

1. 79-08068
2. 30-045-05729-0000-0
3. 108
4. El Paso Natural Gas Company
5. McManus 4
6. Ballard-Pictured Cliffs Gas
7. San Juan, NM
8. 3.0 million cubic feet
9. June 8, 1979
10. El Paso Natural Gas Company

1. 79-08069
2. 30-045-05654-0000-0
3. 108
4. El Paso Natural Gas Company
5. McManus 1
6. Ballard-Pictured Cliffs Gas
7. San Juan, NM
8. 10.2 million cubic feet
9. June 8, 1979
10. El Paso Natural Gas Company

1. 79-08070
2. 30-045-05632-0000-0
3. 108
4. El Paso Natural Gas Company
5. McManus 6
6. Ballard-Pictured Cliffs Gas
7. San Juan, NM
8. 4.0 million cubic feet
9. June 8, 1979
10. El Paso Natural Gas Company

1. 79-08071
2. 30-045-06496-0000-0
3. 108
4. El Paso Natural Gas Company
5. Pipkin 7
6. Fulcher Kutz-Pictured Cliffs Gas
7. San Juan, NM
8. 5.8 million cubic feet
9. June 8, 1979
10. El Paso Natural Gas Company

1. 79-08072
2. 30-045-05468-0000-0
3. 108
4. El Paso Natural Gas Company
5. Quitzau 9
6. Ballard-Pictured Cliffs Gas
7. San Juan, NM
8. 4.7 million cubic feet
9. June 8, 1979
10. El Paso Natural Gas Company

1. 79-08073
2. 30-045-21305-0000-0
3. 108
4. El Paso Natural Gas Company
5. Atlantic B #14
6. Blanco-Pictured Cliffs Gas
7. San Juan, NM
8. 14.2 million cubic feet
9. June 8, 1979
10. El Paso Natural Gas Company

1. 79-08074
2. 30-045-21356-0000-0
3. 108
4. El Paso Natural Gas Company
5. Allison Unit NP #41
6. Basin-Dakota Gas
7. San Juan, NM
8. .0 million cubic feet
9. June 8, 1979
10. El Paso Natural Gas Company

1. 79-08075
2. 30-045-21442-0000-0
3. 108
4. El Paso Natural Gas Company
5. Kelly #3
6. Blanco-Pictured Cliffs Gas
7. San Juan, NM
8. 18.6 million cubic feet
9. June 8, 1979
10. El Paso Natural Gas Company

1. 79-08076
2. 30-045-21327-0000-0
3. 108
4. El Paso Natural Gas Company
5. Allison Unit NP #38
6. Basin-Dakota Gas
7. San Juan, NM
8. .0 million cubic feet
9. June 8, 1979
10. El Paso Natural Gas Company

1. 79-08077
2. 30-045-07065-0000-0
3. 108
4. El Paso Natural Gas Company
5. Daum #2
6. Aztec-Pictured Cliffs Gas
7. San Juan, NM
8. 14.6 million cubic feet
9. June 8, 1979
10. El Paso Natural Gas Company

1. 79-08078
2. 30-045-06947-0000-0
3. 108
4. El Paso Natural Gas Company
5. Daum #1
6. Aztec-Pictured Cliff Gas
7. San Juan, NM
8. 5.0 million cubic feet
9. June 8, 1979
10. El Paso Natural Gas Company

1. 79-08079
2. 30-045-06686-0000-0

3. 108
4. El Paso Natural Gas Company
5. Turner Hughes 12
6. Blanco South-Pictured Cliffs Gas
7. San Juan, NM
8. 14.2 million cubic feet
9. June 8, 1979
10. El Paso Natural Gas Company

1. 79-08080
2. 30-045-08656-0000-0
3. 108
4. El Paso Natural Gas Company
5. White-Cornell #2
6. Fulcher Kutz-Pictured Cliff Gas
7. San Juan, NM
8. 7.0 million cubic feet
9. June 8, 1979
10. El Paso Natural Gas Company

1. 79-08081
2. 30-045-07414-0000-0
3. 108
4. El Paso Natural Gas Company
5. Kutz Canyon Oil & Gas #1
6. Fulcher Kutz-Pictured Cliffs Gas
7. San Juan, NM
8. 6.2 million cubic feet
9. June 8, 1979
10. El Paso Natural Gas Company

1. 79-8082
2. 30-045-13112
3. 108
4. El Paso Natural Gas Company
5. Mansfield 7
6. Blanco-Pictured Cliffs Gas
7. San Juan, NM
8. 9.0 million cubic feet
9. June 8, 1979
10. El Paso Natural Gas Company

The applications for determination in these proceedings together with a copy or description of other materials in the record on which such determinations were made are available for inspection, except to the extent such material is treated as confidential under 18 CFR 275.206, at the Commission's Office of Public Information, room 1000, 825 North Capitol Street, N.E., Washington, D.C. 20426.

Persons objecting to any of these final determinations may, in accordance with 18 CFR 275.203 and 18 CFR 275.204, file a protest with the Commission on or before July 23, 1979.

Please reference the FERC control number in all correspondence related to these determinations.

Kenneth F. Plumb,

Secretary.

[FR Doc. 79-20804 Filed 7-5-79; 8:45 am]

BILLING CODE 6450-01-M

Louisiana, et al.; Determinations by Jurisdictional Agencies Under the Natural Gas Policy Act of 1978

June 28, 1979.

The Federal Energy Regulatory Commission received notices from the jurisdictional agencies listed below of determinations pursuant to 18 CFR 274.104 and applicable to the indicated wells pursuant to the Natural Gas Policy Act of 1978.

Louisiana Office of Conservation

1. Control Number (F.E.R.C./State)
2. API Well Number
3. Section of NGPA
4. Operator
5. Well Name
6. Field or OCS Area Name
7. County, State or Block No.
8. Estimated Annual Volume
9. Date Received at FERC
10. Purchaser(s)

1. 79-08491
2. 17-067-00000-
3. 108
4. IMC Exploration Company
5. Tensas Delta #6
6. Monroe Gas Field
7. Morehouse, La.
8. 8.0 million cubic feet
9. June 13, 1979
10. Mid Louisiana Gas Company

1. 79-08492
2. 17-073-20085-
3. 108
4. IMC Exploration Company
5. Richland Plant #F-83
6. Monroe Gas Field
7. Ouachita, La.
8. 4.7 million cubic feet
9. June 13, 1979
10. Mid Louisiana Gas Company

1. 79-08493
2. 17-111-00539-
3. 108
4. IMC Exploration Company
5. Roberson #84
6. Monroe Gas Field
7. Union, La.
8. 6.5 million cubic feet
9. June 13, 1979
10. Mid Louisiana Gas Company

1. 79-08494
2. 17-111-00000-
3. 108
4. IMC Exploration Company
5. Roberson B #83
6. Monroe Gas Field
7. Union, La.
8. 5.1 million cubic feet
9. June 13, 1979
10. Mid Louisiana Gas Company

1. 79-08495
2. 17-111-00560-
3. 108
4. IMC Exploration Company
5. Roberson C #81
6. Monroe Gas Field
7. Union, La.
8. 6.0 million cubic feet
9. June 13, 1979
10. Mid Louisiana Gas Company

1. 79-08496
2. 17-111-00000-
3. 108
4. IMC Exploration Company
5. Scarborough #1
6. Monroe Gas Field
7. Union, La.
8. 4.7 million cubic feet
9. June 13, 1979
10. Mid Louisiana Gas Company

1. 79-08497
2. 17-111-01225-
3. 103
4. IMC Exploration Company
5. Smith B #75
6. Monroe Gas Field
7. Union, La.
8. 3.7 million cubic feet
9. June 13, 1979
10. Mid Louisiana Gas Company

1. 79-08498
2. 17-111-00000-
3. 103
4. IMC Exploration Company
5. Smith C #1
6. Monroe Gas Field
7. Union, La.
8. 7.2 million cubic feet
9. June 13, 1979
10. Mid Louisiana Gas Company

1. 79-08499
2. 17-111-01794-
3. 103
4. IMC Exploration Company
5. Smith C #2
6. Monroe Gas Field
7. Union, La.
8. 8.2 million cubic feet
9. June 13, 1979
10. Mid Louisiana Gas Company

1. 79-08500
2. 17-111-01790-
3. 103
4. IMC Exploration Company
5. Smith C #3
6. Monroe Gas Field
7. Union, La.
8. 5.1 million cubic feet
9. June 13, 1979
10. Mid Louisiana Gas Company

1. 79-08501
2. 17-111-01215-
3. 103
4. IMC Exploration Company
5. Crow #1
6. Monroe Gas Field
7. Union, La.
8. 6.3 million cubic feet
9. June 13, 1979
10. Mid Louisiana Gas Company

1. 79-08502
2. 17-111-01216-
3. 103
4. IMC Exploration Company
5. Crow #2
6. Monroe Gas Field
7. Union, La.
8. 3.0 million cubic feet
9. June 13, 1979
10. Mid Louisiana Gas Company

1. 79-08503
2. 17-067-00269-
3. 103
4. IMC Exploration Company
5. Mrs. Cherrie Bernstein Et Al #1
6. Monroe Gas Field
7. Morehouse, La.
8. 5.0 million cubic feet
9. June 13, 1979
10. Mid Louisiana Gas Company

1. 79-08504

2. 17-067-00000-
3. 108
4. IMC Exploration Company
5. Tensas Delta #14
6. Monroe Gas Field
7. Morehouse, La.
8. 6.9 million cubic feet
9. June 13, 1979
10. Mid Louisiana Gas Company

1. 79-08505
2. 17-067-00000-
3. 108
4. IMC Exploration Company
5. Tensas Delta #15
6. Monroe Gas Field
7. Morehouse, La.
8. 6.9 million cubic feet
9. June 13, 1979
10. Mid Louisiana Gas Company

1. 79-08506
2. 17-067-00000-
3. 108
4. IMC Exploration Company
5. Tensas Delta #16
6. Monroe Gas Field
7. Morehouse, La.
8. 12.0 million cubic feet
9. June 13, 1979
10. Mid Louisiana Gas Company

1. 79-08507
2. 17-067-00000-
3. 108
4. IMC Exploration Company
5. Tensas Delta #17
6. Monroe Gas Field
7. Morehouse, La.
8. 5.8 million cubic feet
9. June 13, 1979
10. Mid Louisiana Gas Company

1. 79-08508
2. 17-067-21259
3. 103
4. IMC Exploration Company
5. Mrs. Cherrie Bernstein Et Al #27
6. Monroe Gas Field
7. Morehouse, La.
8. 14.6 million cubic feet
9. June 13, 1979
10. Mid Louisiana Gas Company

1. 79-08509
2. 17-067-21260-
3. 103
4. IMC Exploration Company
5. Mrs. Cherrie Bernstein Et Al #28
6. Monroe Gas Field
7. Morehouse, La.
8. 14.6 million cubic feet
9. June 13, 1979
10. Mid Louisiana Gas Company

1. 79-08510
2. 17-067-20253-
3. 108
4. Pennzoil Producing Company
5. Crossett Tbr & Dev Co No 144
6. Monroe
7. Morehouse, La.
8. 13.0 million cubic feet
9. June 13, 1979
10. United Gas Pipe Line Co

1. 79-08511
2. 17-067-20254-
3. 108
4. Pennzoil Producing Company
5. Crossett Tbr & Dev Co No 145
6. Monroe
7. Morehouse, La.
8. 14.0 million cubic feet
9. June 13, 1979
10. United Gas Pipe Line Co

1. 79-08512
2. 17-067-20256-
3. 108
4. Pennzoil Producing Company
5. Crossett Tbr & Dev Co No 146
6. Monroe
7. Morehouse, La.
8. 3.0 million cubic feet
9. June 13, 1979
10. United Gas Pipe Line Co

1. 79-08513
2. 17-067-20257-
3. 108
4. Pennzoil Producing Company
5. Crossett Tbr & Dev Co No 147
6. Monroe
7. Morehouse, La.
8. 7.0 million cubic feet
9. June 13, 1979
10. United Gas Pipe Line Co

1. 79-08514
2. 17-067-20258-
3. 108
4. Pennzoil Producing Company
5. Crossett Tbr & Dev Co No 148
6. Monroe
7. Morehouse, La.
8. 3.0 million cubic feet
9. June 13, 1979
10. United Gas Pipe Line Co

1. 79-08515
2. 17-067-20259-
3. 108
4. Pennzoil Producing Company
5. Crossett Tbr & Dev Co No 149
6. Monroe
7. Morehouse, La.
8. 4.0 million cubic feet
9. June 13, 1979
10. United Gas Pipe Line Co

1. 79-08516
2. 17-067-20260- -
3. 108
4. Pennzoil Producing Company
5. Crossett Tbr & Dev Co No. 150
6. Monroe
7.
8.
9. June 13, 1979
10. United Gas Pipe Line Co

1. 79-08517
2. 17-067-00326- -
3. 108
4. IMC Exploration Company
5. Crossett Lbr Co #2
6. Monroe Gas Field
7.
8.
9. June 13, 1979
10. Mid Louisiana Gas Company

1. 79-08518
2. 17-067-20261- -
3. 108
4. Pennzoil Producing Co
5. Crossett Tbr & Dev Co No. 15
6. Monroe
7. Morehouse, LA
8. 2.0 million cubic feet
9. June 13, 1979
10. United Gas Pipe Line Co

1. 79-08519
2. 17-067-00275- -
3. 108
4. IMC Exploration Company
5. Mrs Cherrie Bernstein et al. #20
6. Monroe Gas Field
7. Morehouse, LA
8. 4.1 million cubic feet
9. June 13, 1979
10. Mid Louisiana Gas Company

1. 79-08520
2. 17-067-21064- -
3. 108
4. IMC Exploration Company
5. Mrs Cherrie Bernstein et al. #22
6. Monroe Gas Field
7. Morehouse, LA
8. 20.6 million cubic feet
9. June 13, 1979
10. Mid Louisiana Gas Company

1. 79-08521
2. 17-067-21075- -
3. 108
4. IMC Exploration Company
5. Mrs Cherrie Bernstein et al. #21
6. Monroe Gas Field
7. Morehouse, LA
8. 20.6 million cubic feet
9. June 13, 1979
10. Mid Louisiana Gas Company

1. 79-08522
2. 17-067-21062- -
3. 108
4. IMC Exploration Company
5. Crossett #1
6. Monroe Gas Field
7. Morehouse, LA
8. 17.8 million cubic feet
9. June 13, 1979
10. Mid Louisiana Gas Company

1. 79-08523
2. 17-067-00325- -
3. 108
4. IMC Exploration Company
5. Crossett Lbr Co. #1
6. Monroe Gas Field
7. Morehouse, LA
8. 9.0 million cubic feet
9. June 13, 1979
10. Mid Louisiana Gas Company

1. 79-08524
2. 17-067-20264- -
3. 108
4. Pennzoil Producing Company
5. Crossett Tbr & Dev Co No. 153
6. Monroe
7. Morehouse, LA
8. 16.0 million cubic feet
9. June 13, 1979
10. United Gas Pipe Line Co

1. 79-08525
2. 17-067-20265- -
3. 108
4. Pennzoil Producing Company
5. Crossett Tbr & Dev Co No. 154
6. Monroe
7. Morehouse, LA
8. 12.0 million cubic feet
9. June 13, 1979
10. United Gas Pipe Line Co

1. 79-08526
2. 17-067-20266- -

3. 108
4. Pennzoil Producing Company
5. Crossett Tbr & Dev Co No. 155
6. Monroe
7. Morehouse, LA
8. 11.0 million cubic feet
9. June 13, 1979
10. United Gas Pipe Line Co

1. 79-08527
2. 17-067-20267- -
3. 108
4. Pennzoil Producing Company
5. Crossett Tbr & Dev Co No. 156
6. Monroe
7. Morehouse, LA
8. 2.0 million cubic feet
9. June 13, 1979
10. United Gas Pipe Line Co

1. 79-08528
2. 17-067-20268- -
3. 108
4. Pennzoil Producing Company
5. Crossett Tbr & Dev Co No. 157
6. Monroe
7. Morehouse, LA
8. 8.0 million cubic feet
9. June 13, 1979
10. United Gas Pipe Line Co

1. 79-08529
2. 17-067-20272- -
3. 108
4. Pennzoil Producing Company
5. Crossett Tbr & Dev Co No. 160
6. Monroe
7. Morehouse, LA
8. 3.0 million cubic feet
9. June 13, 1979
10. United Gas Pipe Line Co

1. 79-08530
2. 17-099-01584- -
3. 108
4. Texaco Inc
5. St Martin Land Co #45
6. Plumb Bob
7. St Martin Parish, LA
8. 24.6 million cubic feet
9. June 13, 1979
10. United Gas Pipe Line Co

1. 79-08531
2. 17-111-01221- -
3. 108
4. IMC Exploration Company
5. Spencer #1
6. Monroe Gas Field
7. Union, LA
8. 1.1 million cubic feet
9. June 13, 1979
10. Mid Louisiana Gas Company

1. 79-08532
2. 17-111-01224- -
3. 108
4. IMC Exploration Company
5. Stancil—Savage #73
6. Monroe Gas Field
7. Union, LA
8. 5.6 million cubic feet
9. June 13, 1979
10. Mid Louisiana Gas Company

1. 79-08533
2. 17-111-01760- -
3. 108
4. IMC Exploration Company
5. Striplin #67
6. Monroe Gas Field
7. Union, LA
8. 7.3 million cubic feet
9. June 13, 1979
10. Mid Louisiana Gas Company

1. 79-08534
2. 17-067-00534- -
3. 108
4. IMC Exploration Company
5. Tensas Delta #1
6. Monroe Gas Field
7. Morehouse, LA
8. 8.0 million cubic feet
9. June 13, 1979
10. Mid Louisiana Gas Company

1. 79-08535
2. 17-067-00540- -
3. 108
4. IMC Exploration Company
5. Tensas Delta #3
6. Monroe Gas Field
7. Morehouse, LA
8. 8.0 million cubic feet
9. June 13, 1979
10. Mid Louisiana Gas Company

1. 79-08536
2. 17-111-01761- -
3. 108
4. IMC Exploration Company
5. Striplin #70
6. Monroe Gas Field
7. Union, LA
8. 3.4 million cubic feet
9. June 13, 1979
10. Mid Louisiana Gas Company

1. 79-08537
2. 17-067-20280- -
3. 108
4. Pennzoil Producing Company
5. Crossett Tbr & Dev Co No. 166
6. Monroe
7. Morehouse, LA
8. 6.0 million cubic feet
9. June 13, 1979
10. United Gas Pipe Line Co

1. 79-08538
2. 17-067-20279- -
3. 108
4. Pennzoil Producing Company
5. Crossett Tbr & Dev Co No. 163
6. Monroe
7. Morehouse, LA
8. 13.0 million cubic feet
9. June 13, 1979
10. United Gas Pipe Line Co

1. 79-08539
2. 17-067-00276- -
3. 108
4. IMC Exploration Company
5. Mrs Cherrie Bernstein et al. #7
6. Monroe Gas Field
7. Morehouse, LA
8. 4.2 million cubic feet
9. June 13, 1979
10. Mid Louisiana Gas Company

1. 79-08540
2. 17-067-00000- -
3. 108
4. IMC Exploration Company
5. Mrs Cherrie Bernstein et al. #8
6. Monroe Gas Field
7. Morehouse, LA
8. 3.3 million cubic feet
9. June 13, 1979
10. Mid Louisiana Gas Company

1. 79-08541
2. 17-067-00219- -
3. 108
4. IMC Exploration Company
5. Mrs Cherrie Bernstein et al. #9
6. Monroe Gas Field
7. Morehouse, LA
8. 5.8 million cubic feet
9. June 13, 1979
10. Mid Louisiana Gas Company

1. 79-08542
2. 17-067-00220- -
3. 108
4. IMC Exploration Company
5. Mrs Cherrie Bernstein et al. #10
6. Monroe Gas Field
7. Morehouse, LA
8. 8.2 million cubic feet
9. June 13, 1979
10. Mid Louisiana Gas Company

1. 79-08543
2. 17-051-20472- -
3. 108
4. Chevron USA Inc
5. Edwin P. Brady et al. 4 #18 (Brady #1)
6. Bayou de Flour
7. Jefferson, LA
8. 400.0 million cubic feet
9. June 13, 1979
10. Southern Natural Gas Co

1. 79-08544
2. 17-075-22264- - -
3. 108
4. Exxon Corporation
5. MIO 10D RF SUA URSLA Gordon 1
6. Potach
7. Plaquemines, LA
8. 110.0 million cubic feet
9. June 13, 1979
10. United Gas Pipe Line Co

1. 79-08545
2. 17-067-20262- -
3. 108
4. Pennzoil Producing Company
5. Crossett Tbr & Dev Co No. 152
6. Monroe
7. Morehouse, LA
8. 7.0 million cubic feet
9. June 13, 1979
10. United Gas Pipe Line Co

1. 79-08546
2. 17-073-00000- -
3. 108
4. IMC Exploration Company
5. Spade #1
6. Monroe gas field
7. Ouachita LA
8. 2.9 million cubic feet
9. June 13, 1979
10. Mid Louisiana Gas Company

1. 79-08547
2. 17-073-20037- -
3. 108
4. IMC Exploration Company
5. Richland Fee #17
6. Monroe gas field
7. Ouachita LA
8. 5.4 million cubic feet
9. June 13, 1979
10. Mid Louisiana Gas Company

1. 79-08548
2. 17-073-00056- -
3. 108
4. IMC Exploration Company

5. Richland Plant #9
6. Monroe gas field
7. Ouachita LA
8. 3.1 million cubic feet
9. June 13, 1979
10. Mid Louisiana Gas Company

1. 79-08549
2. 17-073-00076- -
3. 108
4. IMC Exploration Company
5. Richland Plant #8
6. Monroe gas field
7. Ouachita LA
8. 2.2 million cubic feet
9. June 13, 1979
10. Mid Louisiana Gas Company

1. 79-08550
2. 17-073-00078- -
3. 108
4. IMC Exploration Company
5. Richland PLant #6
6. Monroe gas field
7. Ouachita LA
8. 3.8 million cubic feet
9. June 13, 1979
10. Mid Louisiana Gas Company

1. 79-08551
2. 17-111-00536- -
3. 108
4. IMC Exploration Company
5. Reppond #3
6. Monroe gas field
7. Union LA
8. 5.5 million cubic feet
9. June 13, 1979
10. Mid Louisiana Gas Company

1. 79-08553
2. 17-067-00000- -
3. 108
4. IMC Exploration Company
5. Spyker #6
6. Monroe gas field
7. Morehouse LA
8. 2.9 million cubic feet
9. June 13, 1979
10. Mid Louisiana Gas Company

1. 79-08554
2. 17-067-20281- -
3. 108
4. Pennzoil Producing Company
5. Crossett Tbr & Dev Co No. 167
6. Monroe
7. Morehouse LA
8. 9.0 million cubic feet
9. June 13, 1979
10. United Gas Pipe Line Co

1. 79-08555
2. 17-067-20218- -
3. 108
4. Pennzoil Producing Co
5. Crossett Tbr & Dev Co No 129
6. Monroe
7. Morehouse LA
8. 3.0 million cubic feet
9. June 13, 1979
10. United Gas Pipe Line Co

1. 79-08556
2. 17-033-20040- -
3. 103
4. Goldking Production Company
5. R L Kleinpeter No 4-D
6. Siegen (10300 A)
7. East Baton Rouge LA
8. 18.0 million cubic feet
9. June 13, 1979
10. United Gas Pipe Line Co

1. 79-08557
2. 17-101-21108- -
3. 103
4. WWF Oil Corporation
5. DC Bintliff & WWF Oil SL 4801 4D
6. Atchafalaya Bay field
7. St Mary LA
8. 365.0 million cubic feet
9. June 13, 1979
10. Tennessee Gas Pl Company

1. 79-08558
2. 17-101-21096- -
3. 103
4. WWF Oil Corporation
5. DC Bintliff & WWF Oil SL 4801 #3
6. Atchafalaya Bay field
7. St Mary LA
8. 365.0 million cubic feet
9. June 13, 1979
10. Tennessee Gas Pl Company

1. 79-08559
2. 17-067-20220- -
3. 108
4. Pennzoil Producing Co
5. Crossett Tbr & Dev Co No 128
6. Monroe
7. Morehouse LA
8. 7.0 million cubic feet
9. June 13, 1979
10. United Gas Pipe Line Co

1. 79-08560
2. 17-067-21135- -
3. 108
4. IMC Exploration Company
5. C Bernstein CT AL #24
6. Monroe gas field
7. Morehouse LA
8. 15.7 million cubic feet
9. June 13, 1979
10. Mid Louisiana Gas Company

1. 79-08561
2. 17-067-20278- -
3. 108
4. Pennzoil Producing Company
5. Crossett Tbr & Dev Co No 164
6. Monroe
7. Morehouse LA
8. 3.0 million cubic feet
9. June 13, 1979
10. United Gas Pipe Line Co

1. 79-08562
2. 17-067-20273- -
3. 108
4. Pennzoil Producing Company
5. Crossett Tbr & Dev Co No 162
6. Monroe
7. Morehouse LA
8. 3.0 million cubic feet
9. June 13, 1979
10. United Gas Pipe Line Co

1. 79-08563
2. 17-067-20274- -
3. 108
4. Pennzoil Producing Company
5. Crossett Tbr & Dev Co No 163
6. Monroe
7. Morehouse LA
8. 15.0 million cubic feet
9. June 13, 1979
10. United Gas Pipe Line Co

1. 79-08564
2. 17-111-00537- -
3. 108
4. IMC Exploration Company
5. Rippond #2
6. Monroe gas field
7. Union LA
8. 6.6 million cubic feet
9. June 13, 1979
10. Mid Louisiana Gas Company

1. 79-08565
2. 17-075-22351- -
3. 103
4. Gulf Oil Corporation
5. VU 73 J G Timolat B #130-D West Bay
6. West Bay
7. Plaquemines LA
8. 818.0 million cubic feet
9. June 13, 1979
10. Texas Eastern Tran Corp.

1. 79-08566
2. 17-067-20271- -
3. 108
4. Pennzoil Producing Company
5. Crossett Tbr & Dev Co No 161
6. Monroe
7. Morehouse LA
8. 12.0 million cubic feet
9. June 13, 1979
10. United Gas Pipe Line Co

1. 79-08567
2. 17-073-00000- -
3. 108
4. IMC Exploration Company
5. Phillips B #4
6. Monroe Gas Field
7. Ouachita LA
8. 5.5 million cubic feet
9. June 13, 1979
10. Mid Louisiana Gas Company

1. 79-08568
2. 17-111-01190- -
3. 108
4. IMC Exploration Company
5. Ray #1
6. Monroe Gas Field
7. Union LA
8. 1.8 million cubic feet
9. June 13, 1979
10. Mid Louisiana Gas Company

1. 79-08569
2. 17-111-01205- -
3. 108
4. IMC Exploration Company
5. Ray #2
6. Monroe Gas Field
7. Union LA
8. 9.5 million cubic feet
9. June 13, 1979
10. Mid Louisiana Gas Company

1. 79-08570
2. 17-111-21283- -
3. 108
4. IMC Exploration Company
5. Ray #3
6. Monroe Gas Field
7. Union LA
8. 7.3 million cubic feet
9. June 13, 1979
10. Mid Louisiana Gas Company

1. 79-08571
2. 17-073-00000- -
3. 108
4. IMC Exploration Company
5. Phillips B #1

6. Monroe Gas Field
7. Ouachita LA
8. 4.4 million cubic feet
9. June 13, 1979
10. Mid Louisiana Gas Company

1. 79-08572
2. 17-073-00000- -
3. 108
4. IMC Exploration Company
5. Phillips B #2
6. Monroe Gas Field
7. Ouachita LA
8. 8.4 million cubic feet
9. June 13, 1979
10. Mid Louisiana Gas Company

1. 79-08573
2. 17-067-00000- -
3. 108
4. IMC Exploration Company
5. Perry #2
6. Monroe Gas Field
7. Morehouse LA
8. 3.2 million cubic feet
9. June 13, 1979
10. Mid Louisiana Gas Company

1. 79-08574
2. 17-111-01201- -
3. 108
4. IMC Exploration Company
5. Phillips B #72
6. Monroe Gas Field
7. Union LA
8. 6.1 million cubic feet
9. June 13, 1979
10. Mid Louisiana Gas Company

1. 79-08575
2. 17-067-20225- -
3. 108
4. Pennzoil Producing Co
5. Crossett TBR & DEV Co No 130
6. Monroe
7. Morehouse LA
8. 12.0 million cubic feet
9. June 13, 1979
10. United Gas Pipe Line Co

1. 79-08576
2. 17-067-20232- -
3. 108
4. Pennzoil Producing Co
5. Crossett TBR & DEV Co No 131
6. Monroe
7. Morehouse LA
8. 2.0 million cubic feet
9. June 13, 1979
10. United Gas Pipe Line Co

1. 79-085577
2. 17-067-20233- -
3. 108
4. Pennzoil Producing Co
5. Crossett TBR & Dev Co No 132
6. Monroe
7. Morehouse LA
8. 2.0 million cubic feet
9. June 13, 1979
10. United Gas Pipe Line Co

1. 79-08578
2. 17-053-20508- -
3. 103
4. Union Texas Petroleum
5. Mallet No 3
6. Lake Arthur
7. Jefferson Davis LA
8. 2658.0 million cubic feet
9. June 13, 1979
10. Texas Gas Transmission Corp

1. 79-08579
2. 17-053-20525- -
3. 103
4. Union Texas Petroleum
5. TRS Farms No 12
6. Lake Arthur
7. Jefferson Davis LA
8. 132.0 million cubic feet
9. June 13, 1979
10. Texas Gas Transmission Corp

1. 79-08580
2. 17-047-20486- -
3. 103
4. IMC Exploration Company
5. Jumonville RB SUA P Kess 2 157422
6. Laurel Ridge
7. Iberville LA
8. 60.0 million cubic feet
9. June 13, 1979
10. Sugar Bowl Gas Corporation

1. 79-08581
2. 17-113-20679- -
3. 107
4. Superior Oil Company
5. BT Broussard No 1
6. Kaplan
7. Vermilion Parish LA
8. 1643.0 million cubic feet
9. June 13, 1979
10. Louisiana Intrastate Gas Corp

1. 79-08582
2. 17-067-00222- -
3. 108
4. IMC Exploration Company
5. Mrs Cherrie Bernstein et al #12
6. Monroe Gas Field
7. Morehouse LA
8. 1.7 million cubic feet
9. June 13, 1979
10. Mid Louisiana Gas Company

1. 79-08583
2. 17-067-00221- -
3. 108
4. IMC Exploration Company
5. Mrs Cherrie Bernstein et al #11
6. Monroe Gas Field
7. Morehouse LA
8. 5.9 million cubic feet
9. June 13, 1979
10. Mid Louisiana Gas Company

1. 79-08584
2. 17-067-00223- -
3. 108
4. IMC Exploration Company
5. Mrs Cherrie Bernstein et al #13
6. Monroe Gas Field
7. Morehouse LA
8. 5.4 million cubic feet
9. June 13, 1979
10. Mid Louisiana Gas Company

1. 79-08585
2. 17-067-00233- -
3. 108
4. IMC Exploration Company
5. Mrs Cherrie Bernstein et al #15
6. Monroe Gas Field
7. Morehouse LA
8. 5.3 million cubic feet
9. June 13, 1979
10. Mid Louisiana Gas Company

1. 79-08586
2. 17-067-00234- -
3. 103
4. IMC Exploration Company
5. Mrs C Bernstein et al #16
6. Monroe Gas Field.
7. Morehouse LA
8. 4.5 million cubic feet
9. June 13, 1979
10. Mid Louisiana Gas Company

1. 79-08587
2. 17-067-00272- -
3. 103
4. IMC Exploration Company
5. Mrs. C. Bernstein et al. #17
6. Monroe Gas Field
7. Morehouse, LA
8. 5.5 million cubic feet
9. June 13, 1979
10. Mid Louisiana Gas Company

1. 79-08588
2. 17-067-00274- -
3. 103
4. IMC Exploration Company
5. Mrs. C. Bernstein et al. #19
6. Monroe Gas Field
7. Morehouse, LA
8. 7.1 million cubic feet
9. June 13, 1979
10. Mid Louisiana Gas Company

1. 79-08589
2. 17-067-00273- -
3. 108
4. IMC Exploration Company
5. Mrs. C. Bernstein et al. #18
6. Monroe Gas Field
7. Morehouse, LA
8. 7.5 million cubic feet
9. June 13, 1979
10. Mid Louisiana Gas Company

1. 79-08590
2. 17-067-20234- -
3. 103
4. Pennzoil Producing Co.
5. Crossett Tbr. & Dev. Co. #127-A
6. Monroe
7. Morehouse, LA
8. 12.0 million cubic feet
9. June 13, 1979
10. United Gas Pipe Line Co.

1. 79-08591
2. 17-113-20903- -
3. 107
4. Diamond Shamrock Corporation
5. Barbara Duhon #2
6. West Parcperdue
7. Vermilion, LA
8. 410.0 million cubic feet
9. June 13, 1979
10.

1. 79-08592
2. 17-061-20165- -
3. 103
4. Bass Enterprises Production Co.
5. SMK RA SUC Colvin #2
6. Hico-Knowles
7. Lincoln Parish, LA
8. .0 million cubic feet
9. June 13, 1979
10. United Gas Pipe Line Company

1. 79-08593
2. 17-055-20139- -
3. 103
4. Lynal Inc.
5. Vua Bella Chappuis et al. #1
6. Anse La Butte

7. Lafayette Parish, LA
8. .0 million cubic feet
9. June 13, 1979
10. United Gas Pipeline Company

1. 79-08594
2. 17-045-20537- -
3. 103
4. Clovelly Drlg. & Dev. Co. Inc.
5. 9600 Ra Sua S L 6343 #3-158925
6. South Tigre Lagoon
7. Iberia, LA
8. 365.0 million cubic feet
9. June 13, 1979
10. Tennessee Gas Pipeline Co.

1. 79-08595
2. 17-099-20718- -
3. 102
4. Texaco Inc.
5. 10300 Rh Sua St Martin Psb #22
6. Plumb Bob
7. St. Martin, LA
8. 193.0 million cubic feet
9. June 13, 1979
10. United Gas Pipe Line Company

1. 79-08596
2. 17-045-20480- -
3. 103
4. Exxon Corporation
5. S L 1706 #15
6. Lake Sand
7. Iberia, LA
8. 4000.0 million cubic feet
9. June 13, 1979
10. Columbia Gas Trans. Corp.

1. 79-08597
2. 17-099-20444- -
3. 108
4. Texaco Inc.
5. Dr. Sidney Frederick #1
6. Arnaudville
7. St. Martin, LA
8. 17.7 million cubic feet
9. June 13, 1979
10. United Gas Pipe Line Co.

1. 79-08598
2. 17-045-20533- - -
3. 102
4. Clovelly Drlg. & Dev. Co. Inc.
5. Vermilion Bay Ld #1-158442
6. South Tigre Lagoon
7. Iberia, LA
8. 365.0 million cubic feet
9. June 13, 1979
10. Tennessee Gas Pipeline Co.

1. 79-08599
2. 17-045-20493- -
3. 102
4. Clovelly Drlg. & Dev. Co. Inc.
5. S L 6343 #2-155577
6. South Tigre Lagoon
7. Iberia, LA
8. 500.0 million cubic feet
9. June 13, 1979
10. Tennessee Gas Pipeline Co.

1 79-08600
2. 17-001-20727- -
3. 107
4. Continental Oil Co.
5. Nod B-3 Rb Sua E Meaux #1
6. Rayne
7 Acadia, LA
8. 1000.0 million cubic feet
9. June 13, 1979
10.

1. 79-08601
2. 17-075-22540- -
3. 103
4. Ladd Petroleum Corporation
5. Ladd LL&E #1
6. Lake Washington
7. Plaquemines, LA
8. 472.5 million cubic feet
9. June 13, 1979
10. Southern Natural Gas Co.

1. 79-08602
2. 17-119-20174- -
3. 103
4. Art Machin & Associates Inc.
5. Pet Ra Su Ff Lucious Simms #1
6. North Shongaloo Red Rock
7. Webster, LA
8. 60.0 million cubic feet
9. June 13, 1979
10.

1. 79-08603
2. 17-101-21082- -
3. 103
4. Exxon Corporation
5. Dave Luke B #3
6. Bayou Sale
7. St. Mary, LA
8. 1500.0 million cubic feet
9. June 13, 1979
10. Trunkline Gas Co.

1. 79-08604
2. 17-097-20522- -
3. 103
4. Daniel Oil Company
5. Jordan #1 Serial #161779
6. North Veltin
7. St. Landry, LA
8. 270.0 million cubic feet
9. June 13, 1979
10. Louisiana Intrastate Gas Corp.

1. 79-08605
2. 17-714-20057-0000-
3. 102
4. Chevron USA Inc.
5. S L 2724 #16-D
6. Bay Marchand Blk 2
7. Offshore Lafourche, LA
8. 20.0 million cubic feet
9. June 13, 1979
10. Tennessee Gas Pipeline Company

1. 79-08606
2. 17-061-20011- -
3. 108
4. Murphy Oil Corporation
5. Clay Colvin B 2-D Serial #121078
6. Ruston
7. Lincoln, LA
8. 5.0 million cubic feet
9. June 13, 1979
10. Mississippi River Transmission Corp.

1. 79-08607
2. 17-109-21940- -
3. 103
4. Louisiana Land & Exploration Co
5. S/L 301 Terrebonne Bay #345-156318
6. Caillou Island
7. Terrebonne, LA
8. 387.0 million cubic feet
9. June 13, 1979
10. Texas Eastern Trans Corp

1. 79-08608
2. 17-109-21894- -
3. 103
4. Louisiana Land & Exploration Co
5. S/L 301 Terrebonne Bay #334-154968
6. Caillou Island
7. Terrebonne, LA
8. .0 million cubic feet
9. June 13, 1979
10. Texas Eastern Trans Corp

1. 79-08609
2. 17-109-27950- -
3. 103
4. Louisiana Land & Exploration Co
5. S/L 301 Terrebonne Bay #333-156758
6. Caillou Island
7. Terrebonne, LA
8. 6.0 million cubic feet
9. June 13, 1979
10. Texas Eastern Trans Corp

1. 79-08610
2. 17-111-00409- -
3. 108
4. IMC Exploration Company
5. Union Producing #N-8
6. Monroe Gas Field
7. Union, LA
8. 4.7 million cubic feet
9. June 13, 1979
10. Mid Louisiana Gas Company

1. 79-08611
2. 17-111-00403- -
3. 108
4. IMC Exploration Company
5. Union Producing #N-7
6. Monroe Gas Field
7. Union, LA
8. 3.7 million cubic feet
9. June 13, 1979
10. Mid Louisiana Gas Company

1. 79-08612
2. 17-111-00436- -
3. 108
4. IMC Exploration Company
5. Union Producing #N-6
6. Monroe Gas Field
7. Union, LA
8. 4.4 million cubic feet
9. June 13, 1979
10. Mid Louisiana Gas Company

1. 79-08613
2. 17-111-00437- -
3. 108
4. IMC Exploration Company
5. Union Producing #N-5
6. Monroe Gas Field
7. Union, LA
8. 5.5 million cubic feet
9. June 13, 1979
10. Mid Louisiana Gas Company

1. 79-08614
2. 17-111-00438- -
3. 108
4. IMC Exploration Company
5. Union Producing #N-4
6. Monroe Gas Field
7. Union, LA
8. 2.9 million cubic feet
9. June 13, 1979
10. Mid Louisiana Gas Company

1. 79-08615
2. 17-111-00439- -
3. 108
4. IMC Exploration Company
5. Union Producing #N-3
6. Monroe Gas Field
7. Union, LA
8. 6.2 million cubic feet

9. June 13, 1979
10. Mid Louisiana Gas Company

1. 79-08616
2. 17-111-00585--
3. 108
4. IMC Exploration Company
5. Union Producing #N-2
6. Monroe Gas Field
7. Union, LA
8. 3.7 million cubic feet
9. June 13, 1979
10. Mid Louisiana Gas Company

1. 79-08617
2. 17-111-00410--
3. 108
4. IMC Exploration Company
5. Union Producing #13
6. Monroe Gas Field
7. Union, LA
8. 6.9 million cubic feet
9. June 13, 1979
10. Mid Louisiana Gas Company

1. 79-08618
2. 17-067-21166--
3. 108
4. Primos Production Co
5. Tensas Delta E #3
6. Monroe Gas Field
7. Morehouse, LA
8. 18.4 million cubic feet
9. June 13, 1979
10. United Gas Pipe Line

1. 79-08619
2. 17-067-20237--
3. 108
4. Pennzoil Producing Company
5. Crossett Tbr & Dev Co #137
6. Monroe
7. Morehouse, LA
8. 2.0 million cubic feet
9. June 13, 1979
10. United Gas Pipe Line Co

1. 79-08620
2. 17-067-20239--
3. 108
4. Pennzoil Producing Company
5. Crossett Tbr & Dev Co #139
6. Monroe
7. Morehouse, LA
8. 8.0 million cubic feet
9. June 13, 1979
10. United Gas Pipe Line Co

1. 79-08621
2. 17-067-20240--
3. 108
4. Pennzoil Producing Company
5. Crossett Tbr & Dev Co #140
6. Monroe
7. Morehouse, LA
8. 11.0 million cubic feet
9. June 13, 1979
10. United Gas Pipe Line Co

1. 79-08622
2. 17-067-20242--
3. 108
4. Pennzoil Producing Company
5. Crossett Tbr & Dev Co #142
6. Monroe
7. Morehouse, LA
8. 3.0 million cubic feet
9. June 13, 1979
10. United Gas Pipe Line Co

1. 79-08623
2. 17-067-20243--
3. 108
4. Pennzoil Producing Company
5. Crossett Tbr & Dev Co #143
6. Monroe
7. Morehouse, LA
8. 4.0 million cubic feet
9. June 13, 1979
10. United Gas Pipe Line Co

1. 79-08624
2. 17-113-20838--
3. 103
4. Exxon Corporation
5. Exxon Fee-Pecan Island #04
6. Pecan Island
7. Vermilion/Parish, LA
8. 7000.0 million cubic feet
9. June 13, 1979
10. Columbia Gas Trans Corp

1. 79-08639
2. 17-079-20259--
3. 103
4. Sevarg Company Inc
5. Bentley-Glenmora Lands Inc A #1
6. Glenmora
7. Rapides, LA
8. 72.0 million cubic feet
9. June 8, 1979
10. Tennessee Gas Pipeline Co

1. 79-08640
2. 17-097-20501--
3. 103
4. Sevarg Company Inc
5. Allen Smith #1
6. Savoy
7. St Landry, LA
8. 180.0 million cubic feet
9. June 8, 1979
10.

1. 79-08641
2. 17-097-20500-
3. 103
4. Sevarg Company Inc
5. T J Brown No 1
6. Savoy
7. St Landry, La
8. 180.0 million cubic feet
9. June 8, 1979
10.

1. 79-08642
2. 17-113-20712-
3. 103
4. McCormick Oil & Gas Corp
5. Broussard RB SUA; Stovall No 4
6. Live Oak
7. Vermillion, La
8. 1260.0 million cubic feet
9. June 8, 1979
10. Transcontinental Gas Pipe Line Corp

1. 79-08643
2. 17-099-00000-
3. 103
4. Pano Tech Exploration Corp
5. Martha Knight #2 HBY
6. Lake La Rose
7. St Martin, La
8. 1500.0 million cubic feet
9. June 8, 1979
10. Southern Natural Gas Co

1. 79-08644
2. 17-073-20045-
3. 108
4. IMC Exploration Company
5. Richland Plant #7-50
6. Monroe Gas Field
7. Quachita, La
8. 19.4 million cubic feet
9. June 8, 1979
10. Mid Louisiana Gas Company

1. 79-08645
2. 17-073-20047-
3. 108
4. IMC Exploration Company
5. Richland Plant #7-51
6. Monroe Gas Field
7. Quachita, La
8. 1.6 million cubic feet
9. June 8, 1979
10. Mid Louisiana Gas Company

1. 79-08646
2. 17-073-20057-
3. 108
4. IMC Exploration Company
5. Richland Plant #7-61
6. Monroe Gas Field
7. Quachita, La
8. 4.6 million cubic feet
9. June 8, 1979
10. Mid Louisiana Gas Company

1. 79-08647
2. 17-073-20058-
3. 103
4. IMC Exploration Company
5. Richland Plant #7-62
6. Monroe Gas Field
7. Quachita, La
8. 10.5 million cubic feet
9. June 8, 1979
10. Mid Louisiana Gas Company

1. 79-08648
2. 17-073-20059-
3. 108
4. IMC Exploration Company
5. Richland Plant #7-63
6. Monroe Gas Field
7. Quachita, La
8. 3.0 million cubic feet
9. June 8, 1979
10. Mid Louisiana Gas Company

1. 79-08649
2. 17-073-20061-
3. 108
4. IMC Exploration Company
5. Richland Plant #7-64
6. Monroe Gas Field
7. Quachita, La
8. 3.9 million cubic feet
9. June 8, 1979
10. Mid Louisiana Gas Company

1. 79-08650
2. 17-073-20063-
3. 108
4. IMC Exploration Company
5. Richland Plant #7-67
6. Monroe Gas Field
7. Quachita, La
8. 2.6 million cubic feet
9. June 8, 1979
10. Mid Louisiana Gas Company

1. 79-08651
2. 17-067-00000-
3. 103
4. IMC Exploration Company
5. Tensas Delta #8
6. Monroe Gas Field
7. Morehouse, La
8. 3.3 million cubic feet
9. June 8, 1979

10. Mid Louisiana Gas Company
1. 79-08652
2. 17-067-00000-
3. 108
4. IMC Exploration Company
5. Tensas Delta #9
6. Monroe Gas Field
7. Morehouse, La
8. 6.2 million cubic feet
9. June 8, 1979
10. Mid Louisiana Gas Company
1 79-08653
2. 17-067-00000-
3. 108
4. IMC Exploration Company
5. Tensas Delta #10
6. Monroe Gas Field
7. Morehouse, La
8. 4.4 million cubic feet
9. June 8, 1979
10. Mid Louisiana Gas Company
1. 79-08654
2. 17-067-00000-
3. 108
4. IMC Exploration Company
5. Tensas Delta #11
6. Monroe Gas Field
7. Morehouse, La
8. 4.7 million cubic feet
9. June 8, 1979
10. Mid Louisiana Gas Company
1. 79-08655
2. 17-067-20224-
3. 108
4. Pennzoil Producing Co
5. Crossett Tbr & Dev Co No 133
6. Monroe
7. Morehouse, La
8. 12.0 million cubic feet
9. June 8, 1979
10. United Gas Pipe Line Co
1. 79-08656
2. 17-067-20223-
3. 108
4. Pennzoil Producing Co
5. Crossett Tbr & Dev Co No 134
6. Monroe
7. Morehouse, La
8. 5.0 million cubic feet
9. June 8, 1979
10. United Gas Pipe Line Co
1. 79-08657
2. 17-067-20222-
3. 108
4. Pennzoil Producing Co
5. Crossett Tbr & Dev Co No 135
6. Monroe
7. Morehouse, La
8. 3.0 million cubic feet
9. June 8, 1979
10. United Gas Pipe Line Co
1. 79-08658
2. 17-067-20221-
3. 108
4. Pennzoil Producing Co
5. Crossett Tbr & Dev Co No 136
6. Monroe
7. Morehouse, La
8. 17.0 million cubic feet
9. June 8, 1979
10. United Gas Pipe Line Co
1. 79-08659
2. 17-073-20048-
3. 108
4. IMC Exploration Company
5. Phillips #N-76
6. Monroe Gas Field
7. Quachita, La
8. 4.4 million cubic feet
9. June 8, 1979
10. Mid Louisiana Gas Company
1. 79-08660
2. 17-073-20046-
3. 108
4. IMC Exploration Company
5. Phillips #N-77
6. Monroe Gas Field
7. Quachita, La
8. 4.7 million cubic feet
9. June 8, 1979
10. Mid Louisiana Gas Company
1. 79-08661
2. 17-073-20049-
3. 108
4. IMC Exploration Company
5. Phillips #N-78
6. Monroe Gas Field
7. Quachita, La
8. 6.6 million cubic feet
9. June 8, 1979
10. Mid Louisiana Gas Company
1. 79-08662
2. 17-073-20472-
3. 108
4. IMC Exploration Company
5. Phillips #N-95
6. Monroe Gas Field
7. Union, La
8. 5.8 million cubic feet
9. June 8, 1979
10. Mid Louisiana Gas Company
1. 79-08663
2. 17-073-20043-
3. 108
4. IMC Exploration Company
5. Richland Plant #F-48
6. Monroe Gas Field
7. Quachita, La
8. 2.4 million cubic feet
9. June 8, 1979
10. Mid Louisiana Gas Company
1. 79-08664
2. 17-073-20044-
3. 108
4. IMC Exploration Company
5. Richland Plant #F-49
6. Monroe Gas Field
7. Quachita, La
8. 5.9 million cubic feet
9. June 8, 1979
10. Mid Louisiana Gas Company
1. 79-08666
2. 17-067-20269-
3. 108
4. Pennzoil Producing Co
5. Crossett Tbr & Dev Co No 158
6. Monroe
7. Morehouse, La
8. 6.0 million cubic feet
9. June 13, 1979
10. United Gas Pipe Line Co
1. 79-08678
2. 17-061-20180-
3. 102 103
4. Bass Enterprises Production Co
5. Smk Ra Sud J L Smith A #1
6. Hico—Knowles
7. Lincoln
8. .0 million cubic feet
9. June 13, 1979
10. United Gas Pipe Line Co
1. 79-03617 (revised)
2. 17-057-21396
3. 102 103
4. Bradco Oil & Gas Co
5. Nicholls Ra Sua; Boudrreaux No 1
6. Rousseau
7. Lafourche, La
8. 900.0 million cubic feet
9. May 2, 1979
10. Transcontinental Gas Pipeline Co
1. 79-08552
2. 17-067-00139
3. 108
4. IMC Exploration Company
5. Spyker #13
6. Monroe Gas Field
7. Morehouse, La
8. 2.6 million cubic feet
9. June 13, 1979
10. Mid Louisiana Gas Company

Michigan Department of Natural Resources

1. Control number (F.E.R.C./State)
2. API well number
3. Section of NGPA
4. Operator
5. Well name
6. Field or OCS area name
7. County, State or block no.
8. Estimated annual volume
9. Date received at FERC
10. Purchaser(s)
1. 79-08449
2. 21-079-31788
3. 102
4. Amoco Production Company
5. State Blue Lake Unit L 3-17
6. Blue Lake 17A-28N-5W
7. Kalkaska, Mi
8. 89.0 million cubic feet
9. June 12, 1979
10. Consumers Power
1. 79-08450
2. 21-055-32375
3. 102
4. Amoco Production Company
5. Scharmen 1-20
6. Union 20-26N-9W
7. Grand Traverse, Mi
8. 1424.0 million cubic feet
9. June 12, 1979
10. Michigan Consolidated
1. 79-08451
2. 21-055-31692
3. 102
4. Amoco Production Company
5. State Union Unit N 2-17
6. Union 17-26N-9W
7. Grand Traverse, Mi
8. 412.0 million cubic feet
9. June 12, 1979
10. Michigan Consolidated
1. 79-08452
2. 21-079-31663
3. 102
4. Amoco Production Company
5. Au Sable Trails Unit 2-18
6. Blue Lake 18A-28N-5W
7. Kalkaska, Mi
8. 5334.0 million cubic feet

9. June 12, 1979
10. Consumers Power

1. 79-08453
2. 21-055-31364
3. 102
4. Amoco Production Company
5. State Union Unit M 1-21
6. Union 21-26N-9W
7. Grand Traverse, Mi
8. 131.0 million cubic feet
9. June 12, 1979
10. Michigan Consolidated

1. 79-08665
2. 21-147-31466
3. 102
4. Reef Petroleum Corporation
5. Chester Therrin #2-16
6. Wales 16
7. St Clair County, Mi
8. 365.0 million cubic feet
9. June 12, 1979
10. Southeastern Michigan Gas Co

1. 79-08667
2. 21-125-31763
3. 102
4. Reef Petroleum Corporation
5. S & P Investment #1-1
6. Avon 1
7. Oakland County, Mi
8. 300.0 million cubic feet
9. June 12, 1979
10. Michigan Consolidated Gas Co

1. 79-08668
2. 21-125-31996
3. 102
4. Reef Petroleum Corporation
5. Michigan State University #2-1
6. Avon 1
7. Oakland, Mi
8. 1440.0 million cubic feet
9. June 12, 1979
10. Michigan Consolidated Gas Co

1. 79-08669
2. 21-147-31844
3. 102
4. Reef Petroleum Corporation
5. Harold S Bradshaw #1-9
6. Wales 9
7. St Clair County, Mi
8. 365.0 million cubic feet
9. June 12, 1979
10. Southeastern Michigan Gas Co

1. 79-08670
2. 21-101-31894
3. 102
4. Traverse Corporation
5. State Cleon #1-32A
6. Cleon 32A T24N R13W
7. Manistee, Mi
8. 1000.0 million cubic feet
9. June 12, 1979
10. Michigan Consolidated Gas Co

1. 79-08671
2. 21-055-31379
3. 102
4. Traverse Corporation
5. Henry Svec #1-9A
6. Grant 9 T25N R12W
7. Grand Traverse, Mi
8. 140.0 million cubic feet
9. June 12, 1979
10. Consumers Power Company

1. 79-08672
2. 21-137-32411
3. 103
4. Delta Oil Company Inc
5. Puthuff-Zinn-Schrader 2-23A
6. Dover 2-23A
7. Otsego, Mi
8. 60.4 million cubic feet
9. June 12, 1979
10. Consumers Power Company

1. 79-08673
2. 21-137-31870
3. 103
4. Delta Oil Company Inc
5. Blanzy-Schrader 1-23
6. Dover 1-23
7. Otsego, Mi
8. 80.3 million cubic feet
9. June 12, 1979
10. Consumers Power Company

1. 79-08674
2. 21-137-31515
3. 103
4. Delta Oil Company Inc
5. Piasecki State Chester 1-7
6. Piasecki State Chester 1-7
7. Otsego, Mi
8. 20.1 million cubic feet
9. June 12, 1979
10. Consumers Power Company

1. 79-08675
2. 21-079-32778
3. 102
4. Northern Michigan Exploration Co
5. Nomeco State-Kalkaska #1-16A
6. Kalkaska 16
7. Kalkaska, Mi
8. 110.0 million cubic feet
9. June 12, 1979
10. Consumers Power Company

1. 79-08676
2. 21-105-32138
3. 102
4. Dart Oil & Gas Corporation
5. Tacoma #5-31 (32138)
6.
7. Mason, Mi
8. 30.0 million cubic feet
9. June 12, 1979
10. Consumers Power Company

1. 79-08677
2. 21-079-32840
3. 102
4. Patrick Petroleum Corp of Michigan
5. Coe-McClintic 2-9A
6. West Kalkaska 10
7. Kalkaska County, Mi
8. 100.0 million cubic feet
9. June 12, 1979
10. Consumers Power Company

New Mexico Department of Energy and Minerals

1. Control number (F. E. R. C. /State)
2. API well number
3. Section of NGPA
4. Operator
5. Well name
6. Field or OCS area name
7. County, State or block No.
8. Estimated annual volume
9. Date received at FERC
10. Purchaser(s)

1. 79-08448
2. 30-043-82316-
3. 108
4. BCO Inc
5. State H #1
6. Lybrook Gallup
7. Rio Arriba, NM
8. 9. 0 million cubic feet
9. June 11, 1979
10. El Paso Natural Gas Co

1. 79-03487
2. 30-025-00000- -
3. 103
4. Cities Service Company
5. Owen A #8
6. Wantz Abo
7. Lea NM
8. 40.0 million cubic feet
9. June 15, 1979
10. Getty Oil Company

Wyoming Oil and Gas Conservation Commission

1. Control number (F. E. R. C. /State)
2. API well number
3. Section of NGPA
4. Operator
5. Well name
6. Field or OCS area name
7. County, State or block No.
8. Estimated annual volume
9. Date received at FERC
10. Purchaser(s)

1. 79-08454
2. 49-037-21187- -
3. 103
4. Mountain Fuel Supply Company
5. Bruff #10
6. Bruff Unit
7. Sweetwater, WY
8. 255. 5 million cubic feet
9. June 12 1979
10. Mountain Fuel Supply Company

1. 79-08455
2. 49-023-20247- -
3. 102
4. Mountain Fuel Supply Company
5. Bruff 36-1 State Land
6. Bruff Unit
7. Lincoln, WY
8. 839. 5 million cubic feet
9. June 12, 1979
10. Mountain Fuel Supply Company

1. 79-08456
2. 49-041-20136- -
3. 102
4. Wexpro Company
5. Yellow Creek #1-36
6. Yellow Creek
7. Uinta, WY
8. 488. 7 million cubic feet
9. June 12, 1979
10. Mountain Fuel Supply Company

1. 79-08457
2. 49-035-06079- -
3. 108
4. Gulf Oil Corporation
5. Enger Chrisman #1
6. Big Piney
7. Sublette, WY
8. 19.0 million cubic feet
9. June 12, 1979
10. Northwest Pipeline Corporation

1. 79-08458
2. 49-035-05959- -
3. 103

4. Gulf Oil Corporation
5. Tresnor State #5
6. Big Pine Field
7. Sublette, WY
8. 2.5 million cubic feet
9. June 12, 1979
10. Northwest Pipeline Corporation

1. 79-08459
2. 49-005-24681- -
3. 102
4. Gulf Oil Corporation
5. Schlautmann 1-15
6. Hartzog Draw
7. Campbell, WY
8. 12.0 million cubic feet
9. June 12, 1979
10. Phillips Petroleum Company

1. 79-08460
2. 49-055-24680- -
3. 102
4. Gulf Oil Corporation
5. Leo Fuchs 1-10
6. Hartzog Draw
7. Campbell, WY
8. 63.0 million cubic feet
9. June 12, 1979
10. Panhandle Eastern Pipeline Company

1. 79-08461
2. 49-005-24733- -
3. 102
4. Gulf Oil Corporation
5. Wendell Schlautmann 1-34
6. Hartzog Draw
7. Campbell, WY
8. 15.0 million cubic feet
9. June 12, 1979
10. Panhandle Eastern Pipeline Company

1. 79-08462
2. 49-055-24709- -
3. 102
4. Gulf Oil Corporation
5. Albert Schlautmann 1-34
6. Hartzog Draw
7. Campbell, WY
8. 54.0 million cubic feet
9. June 12, 1979
10. Panhandle Eastern Pipeline Company

1. 79-08463
2. 49-005-24687-
3. 102
4. Gulf Oil Corporation
5. Mary Schlautmann #1-3
6. Hartzog Draw
7. Campbell, WY
8. 43.0 million cubic feet
9. June 12, 1979
10. Panhandle Eastern Pipeline Company

1. 79-08464
2. 49-037-21207-
3. 103
4. Mountain Fuel Supply Company
5. Church Buttes #29
6. Church Buttes
7. Sweetwater, WY
8. 350.0 million cubic feet
9. June 12, 1979
10. Mountain Fuel Supply Company

1. 79-08465
2. 49-037-21100-
3. 103
4. Mountain Fuel Supply Company
5. Church Buttes #26
6. Church Buttes
7. Sweetwater, WY
8. 315.0 million cubic feet
9. June 12, 1979
10. Mountain Fuel Supply Company

1. 79-08466
2. 49-037-00000-
3. 103
4. Petroleum Inc.
5. Amoco UPPR #1
6. North Baxter Basin
7. Sweetwater, WY
8. 200.0 million cubic feet
9. June 12, 1979
10. Stauffer Chemical Co. of Wyoming

1. 79-08467
2. 49-005-24839-
3. 102
4. Woods Petroleum Corporation
5. Van Buggenum #26-2
6. Hartzog Draw
7. Campbell, WY
8. 20.0 million cubic feet
9. June 12, 1979
10. Phillips Petroleum Company

1. 79-08468
2. 49-005-24622-
3. 102
4. Woods Petroleum Corporation
5. Van Buggenum #1-1
6. Hartzog Draw
7. Campbell, WY
8. 20.0 million cubic feet
9. June 12, 1979
10. Phillips Petroleum Company

1. 79-08469
2. 49-005-25006-
3. 102
4. Woods Petroleum Corporation
5. Camblin #26-1
6. Hartzog Draw
7. Campbell, WY
8. 20.0 million cubic feet
9. June 12, 1979
10. Phillips Petroleum Company

1. 79-08470
2. 49-005-24507-
3. 102
4. Woods Petroleum Corporation
5. Camblin #23-1
6. Hartzog Draw
7. Campbell, WY
8. 20.0 million cubic feet
9. June 12, 1979
10. Phillips Petroleum Company

1. 79-08471
2. 49-005-24962-
3. 102
4. Woods Petroleum Corporation
5. Scott Jordan #8-1
6. Hartzog Draw
7. Campbell, WY
8. 20.0 million cubic feet
9. June 12, 1979
10. Phillips Petroleum Company

1. 79-08472
2. 49-005-24659-
3. 102
4. Woods Petroleum Corporation
5. Van Buggenum #26-1
6. Hartzog Draw
7. Campbell, WY
8. 20.0 million cubic feet
9. June 12, 1979
10. Phillips Petroleum Company

1. 79-08473
2. 49-005-24842-
3. 102
4. Woods Petroleum Corporation
5. Van Buggenum #35-1
6. Hartzog Draw
7. Campbell, WY
8. 20.0 million cubic feet
9. June 12, 1979
10. Phillips Petroleum Company

1. 79-08474
2. 49-005-24646-
3. 102
4. Woods Petroleum Corporation
5. Equity State #16-1
6. Hartzog Draw
7. Campbell, WY
8. 20.0 million cubic feet
9. June 12, 1979
10. Phillips Petroleum Company

1. 79-08475
2. 49-005-25035-
3. 102
4. Woods Petroleum Corporation
5. Equity State #16-2
6. Hartzog Draw
7. Campbell, WY
8. 20.0 million cubic feet
9. June 12, 1979
10. Phillips Petroleum Company

1. 79-08476
2. 49-005-24776-
3. 103
4. Arco Oil and Gas Company
5. Oedekoven #25-1
6. Recluse
7. Campbell, WY
8. 205.0 million cubic feet
9. June 12, 1979
10. Gillette Gas Plant

1. 79-08477
2. 49-037-20180-
3. 108
4. Mountain Fuel Supply Co.
5. North Baxter Well #1
6. North Baxter
7. Sweetwater, WY
8. 1.9 million cubic feet
9. June 12, 1979
10. Mountain Fuel Supply Company

1. 79-08478
2. 49-041-20110-
3. 103
4. Mountain Fuel Supply Company
5. Church Buttes #25
6. Church Buttes
7. Uinta, WY
8. 408.7 million cubic feet
9. June 12, 1979
10. Mountain Fuel Supply Company

1. 79-08479
2. 49-009-21438-
3. 103
4. Wexpro Company
5. Fox #13-1 Wolf State
6. Spearhead Ranch Area
7. Converse, WY
8. 182.5 million cubic feet
9. June 12, 1979
10. Mountain Fuel Supply Company

1. 79-08480
2. 49-037-21141-
3. 102
4. Marathon Oil Company

5. West Wamsutter #1-36
6. Wamsutter
7. Sweetwater, WY
8. 672.0 million cubic feet
9. June 12, 1979
10. Colorado Interstate Gas Company

1. 79-08481
2. 49-037-20980-
3. 102
4. Marathon Oil Company
5. Tierney II Unit #1-23
6. Tierney II Unit
7. Sweetwater, WY
8. 908.0 million cubic feet
9. June 12, 1979
10. Colorado Interstate Gas Company

1. 79-08482
2. 49-005-24927-
3. 102
4. Woods Petroleum Corporation
5. Turner #25-1
6. Archibald
7. Campbell, WY
8. 20.0 million cubic feet
9. June 12, 1979
10. Phillips Petroleum Company

1. 79-08483
2. 49-005-24856-
3. 102
4. Woods Petroleum Corporation
5. Bates Creek State #36-2
6. Archibald
7. Campbell, WY
8. 20.0 million cubic feet
9. June 12, 1979
10. Phillips Petroleum Company

1. 79-08484
2. 49-019-20415-
3. 102
4. Woods Petroleum Corporation
5. Irvine #27-1
6. Teton
7. Johnson, WY
8. 20.0 million cubic feet
9. June 12, 1979
10. Phillips Petroleum Company

1. 79-08485
2. 49-041-20119-
3. 102
4. Mountain Fuel Supply Company
5. Bruff #6
6. Bruff
7. Uinta, WY
8. 605.9 million cubic feet
9. June 12, 1979
10. Mountain Fuel Supply Company

1. 79-08486A
2. 49-009-00000-
3. 103
4. Petroleum Inc.
5. Cheesbrough #1
6. Mikes Draw (Teapot)
7. Converse, WY
8. 12.0 million cubic feet
9. June 12, 1979
10. Phillips Petroleum Company

1. 79-08488
2. 49-009-00000-
3. 103
4. Petroleum Inc.
5. Cheesbrough B #2
6. Mikes Draw (Teapot)
7. Converse, WY
8. 5.0 million cubic feet
9. June 12, 1979
10. Phillips Petroleum Company

1. 79-08489
2. 49-009-00000-
3. 103
4. Petroleum, Inc.
5. Cheesbrough C #1
6. Mikes Draw (Teapot)
7. Converse, WY
8. 3.0 million cubic feet
9. June 12, 1979
10. Phillips Petroleum Company

1. 79-08490
2. 49-009-00000-
3. 103
4. Petroleum, Inc.
5. Conoco Mortons Inc. #1
6. Mikes Draw (Teapot)
7. Converse, WY
8. 12.0 million cubic feet
9. June 12, 1979
10. Phillips Petroleum Company

U.S. Geological Survey, Metairie, La.

1. Control Number (F.E.R.C./State)
2. API well number
3. Section of NGPA
4. Operator
5. Well name
6. Field or OCS area name
7. County, State or Block No.
8. Estimated annual volume
9. Date received at FERC
10. Purchaser(s)

1. 79-08625
2. 42-705-40043-0000-0
3. 102
4. Cities Service Company
5. So Brazos Blk A-133 Well No. A-4
6. Brazos (So Addn)
7. A-133
8. .0 million cubic feet
9. June 13, 1979
10. Transco Gas Supply Co.

1. 79-08626
2. 42-705-40028-0000-0
3. 102
4. Cities Service Company
5. So Brazus Blk A-70 Well No. A-4
6. Brazos (So Addn)
7. A-70
8. 4500.0 million cubic feet
9. June 13, 1979
10. Transco Gas Supply Co.

1. 79-08627
2. 42-711-40184-0000-0
3. 102
4. Cities Service Company
5. High Island Blk A-323 Well No. A-14
6. High Island (So Addn)
7. A-323
8. 930.0 million cubic feet
9. June 13, 1979
10. Michigan Wisconsin Pipeline Line Co.

1. 79-08628
2. 42-705-40034-0000-0
3. 102
4. Cities Service Company
5. So Brazus Blk A-70 Well No. A-5
6. Brazos (So Addn)
7. A-70
8. 4500.0 million cubic feet
9. June 13, 1979
10. Transco Gas Supply Co.

1. 79-08629
2. 42-705-40035-0000-0
3. 102
4. Cities Service Company
5. So Brazos Blk A-133 Well No. A-3
6. Brazos (So Addn)
7. A-133
8. 3420.0 million cubic feet
9. June 13, 1979
10. Transco Gas Supply Co.

1. 79-08630
2. 42-705-40003-0000-0
3. 102
4. Cities Service Company
5. So Brazos Blk A-133 Well No. A-2
6. Brazos (So Addn)
7. A-133
8. 1920.0 million cubic feet
9. June 13, 1979
10. Transco Gas Supply Co.

1. 79-08631
2. 42-705-40039-0000-0
3. 102
4. Cities Service Company
5. So Brazos Blk A-70 Well No. A-8
6. Brazos (So Addn)
7. A-70
8. 4500.0 million cubic feet
9. June 13, 1979
10. Transco Gas Supply Co.

1. 79-08632
2. 42-705-40040-0000-0
3. 102
4. Cities Service Company
5. So Brazos Blk A-133 Well No. A-5
6. Brazos (So Addn)
7. A-133
8. 2040.0 million cubic feet
9. June 13, 1979
10. Transco Gas Supply Co.

1. 79-08633
2. 42-705-40047-0000-0
3. 102
4. Cities Service Company
5. So Brazos Blk A-70 Well No. A-11
6. Brazos (So Addn)
7. A-70
8. 2250.0 million cubic feet
9. June 13, 1979
10. Transco Gas Supply Co.

1. 79-08634
2. 42-705-40041-0000-0
3. 102
4. Cities Service Company
5. So Brazos Blk A-70 Well No. A-9
6. Brazos (So Addn)
7. A-70
8. 1500.0 million cubic feet
9. June 13, 1979
10. Transco Gas Supply Co.

1. 79-08635
2. 42-705-40036-0100-0
3. 102
4. Cities Service Company
5. So Brazos Blk A-70 Well No. A-13
6. Brazos (So Addn)
7. A-70
8. 600.0 million cubic feet
9. June 13, 1979
10. Transco Gas Supply Co.

1. 79-08636
2. 42-705-40038-0000-0
3. 102
4. Cities Service Company

5. So Brazos Blk A-70 Well No. A-7
6. Brazos (So Addn)
7. A-70
8. 2250.0 million cubic feet
9. June 13, 1979
10. Transco Gas Supply Co.

1. 79-08637
2. 42-705-40045-0000-0
3. 102
4. Cities Service Company
5. So Brazos Blk A-133 No. A-6
6. Brazos (So Addn)
7. A-133
8. 3090.0 million cubic feet
9. June 13, 1979
10. Transco Gas Supply Co.

1. 79-08638
2. 42-705-40044-0000-0
3. 102
4. Cities Service Company
5. So Brazos Blk A-70 Well No. A-10
6. Brazos (So Addn)
7. A-70
8. 4500.0 million cubic feet
9. June 13, 1979
10. Transco Gas Supply Co.

The applications for determination in these proceedings together with a copy or description of other materials in the record on which such determinations were made are available for inspection, except to the extent such material is treated as confidential under 18 CFR 275.206, at the Commission's Office of Public Information, Room 1000, 825 North Capitol Street, N.E., Washington, D.C. 20426.

Persons objecting to any of these final determinations may, in accordance with 18 CFR 275.203 and 18 CFR 275.204, file a protest with the commission on or before July 23, 1979.

Please reference the FERC control number in all correspondence related to these determinations.

Kenneth F. Plumb,
Secretary.

[FR Doc. 79-20805 Filed 7-5-79; 8:45 am]

BILLING CODE 6450-01-M

[Docket No. CP77-16]

Panhandle Eastern Pipe Line Co.; Trunkline Gas Co.; Petition To Amend

June 27, 1979

Take notice that on June 12, 1979, Panhandle Eastern Pipe Line Company (Panhandle), P.O. Box 1348, Kansas City, Missouri 64141, and Trunkline Gas Company (Trunkline), P.O. Box 1642, Houston, Texas 77001 (Petitioners), filed in Docket No. CP77-16 a petition to amend the order of February 1, 1977,[1] in said docket pursuant to Section 7(c) of the Natural Gas Act so as to authorize Petitioners to transport an increased volume of natural gas for Mississippi River Transmission Corporation (MRT), all as more fully set forth in the petition to amend on file with the Commission and open to public inspection.

Pursuant to the order of February 1, 1977, Petitioners were authorized to transport up to 3,300 Mcf of natural gas per day on a firm basis and up to 2,000 Mcf of natural gas per day on a best efforts basis from the Beckham County, Oklahoma, area to MRT in Clay County, Illinois, pursuant to the terms of a transportation and sales agreement dated September 1, 1976, among Petitioners and MRT.

Petitioners state that MRT has acquired an additional source of gas in the Beckham County area, and pursuant to an amendatory agreement dated March 2, 1979, Petitioners propose to transport for MRT up to 8,000 mcf of natural gas per day on a firm basis from the Beckham County area for redelivery to MRT's transmission system. As partial consideration for the transportation service, MRT would sell to Panhandle up to 20 percent of the volumes of gas transported by Applicant at a price which is MRT's weighted average purchase price plus any cost of service approved by the Commission relating to MRT's gathering, compression, dehydration, treatment and return on MRT's investment in facilities utilized in the gathering of the natural gas, it is stated. Petitioners indicate that MRT would pay them for the proposed transportation service a monthly transportation charge which varies depending upon the point of delivery as follows:

[1] This proceeding was commenced before the FPC. By joint regulation of October 1, 1977 (10 CFR 1000.1), it was transferred to the Commission.

Redelivery point to panhandle by natural	Minimum monthly transportation charge	Unit charge per Mcf
Beckham County, Oklahoma	$29,472	20.17 cents
Clark County, Kansas	$38,400	26.30 cents
Dewey County, Oklahoma	$33,264	22.77 cents

Any person desiring to be heard or to make any protest with reference to said petition to amend should on or before July 17, 1979, file with the Federal Energy Regulatory Commission, Washington, D.C. 20426, a petition to intervene or a protest in accordance with the requirements of the Commission's Rules of Practice and Procedure (18 CFR 1.8 or 1.10) and the Regulations under the Natural Gas Act (18 CFR 157.10). All protests filed with the Commission will be considered by it in determining the appropriate action to be taken but will not serve to make the protestants parties to the proceedings. Any person wishing to become a party to a proceeding or to participate as a party in any hearing therein must file a petition to intervene in accordance with the Commission's Rules.

Kenneth F. Plumb,
Secretary.

[FR Doc. 79-20806 Filed 7-5-79; 8:45 am]

BILLING CODE 6450-01-M

[Docket No. CP79-355]

Panhandle Eastern Pipe Line Co.; Application

June 27, 1979

Take notice that on June 12, 1979, Panhandle Eastern Pipe Line Company (Panhandle), P.O. Box 1642, Houston, Texas 77001, filed in Docket No. CP79-355 an application pursuant to Section 7(c) of the Natural Gas Act for a certificate of public convenience and necessity authorizing the construction and operation of pipeline, compressor, and related facilities to be situated in Barber and Harper Counties, Kansas, all as more fully set forth in the application which is on file with the Commission and open to public inspection.

Panhandle seeks authorization to construct and operate a new compressor station and to make additions to its pipeline system needed to connect new supplies of natural gas. The proposed facilities are as follows:

(1) The establishment of the Sharon Compressor Station to be located in Barber County, Kansas. The proposed Sharon Compressor Station would be equipped with 700 compressor horsepower.

(2) Four and eight-tenths miles of eight-inch pipeline, five-tenths mile of six-inch pipeline and two miles of four-inch pipeline and related facilities to be constructed in Barber County and Harper County, Kansas.

Panhandle states that it entered into a gas purchase and sales agreement on April 16, 1979 with the Molz Oil Company. It is stated that the proposed facilities are needed in order for Panhandle to connect the new supply of non-associated natural gas located in Barber County, Kansas to its existing pipeline system.

It is indicated that the five existing wells which have been drilled on the acreage dedicated to Panhandle, have been evaluated as having 2,200,000 Mcf of initial recoverable reserves. It is Panhandle's understanding that four additional wells would be drilled in the near future and that the nine wells would have a total of 4,000,000 Mcf of initial recoverable reserves.

Panhandle estimates the cost of the proposed facilities to be $1,734,000 which would be financed from funds on hand.

Any person desiring to be heard or to make any protest with reference to said application should on or before July 17, 1979, file with the Federal Energy Regulatory Commission, Washington, D.C. 20426, a petition to intervene or a protest in accordance with the requirements of the Commission's Rules of Practice and Procedure (18 CFR 1.8 or 1.10) and the Regulations under the Natural Gas Act (18 CFR 157.10). All protests filed with the Commission will be considered by it in determining the appropriate action to be taken but will not serve to make the protestants parties to the proceeding. Any person wishing to become a party to a proceeding or to participate as a party in any hearing therein must file a petition to intervene in accordance with the Commission's Rules.

Take further notice that, pursuant to the authority contained in and subject to jurisdiction conferred upon the Federal Energy Regulatory Commission by Sections 7 and 15 of the Natural Gas Act and the Commission's Rules of Practice and Procedure, a hearing will be held without further notice before the Commission or its designee on this application if no petition to intervene is filed within the time required herein, if the Commission on its own review of the matter finds that a grant of the certificate is required by the public convenience and necessity. If a petition for leave to intervene is timely filed, or if the Commission on its own motion believes that a formal hearing is required, further notice of such hearing will be duly given.

Under the procedure herein provided for, unless otherwise advised, it will be unnecessary for Applicant to appear or be represented at the hearing.

Kenneth F. Plumb,

Secretary.

[FR Doc. 79-20807 Filed 7-5-79; 8:45 am]

BILLING CODE 6450-01-M

[Docket No. CP79-350]

United Gas Pipe Line Co.; Application

June 27, 1979.

Take notice that on June 8, 1979, United Gas Pipe Line Company (United), P.O. Box 1478, Houston, Texas 77001, filed in Docket No. CP79-350 an application pursuant to Section 7(c) of the Natural Gas Act requesting authorization to transport natural gas for Columbia Gas Transmission Corporation (Columbia Gas), all as more fully set forth in the application which is on file with the Commission and open to public inspection.

It is stated that Columbia Gas has acquired a supply of natural gas produced in Lake Hatch Field, Terrebonne Parish, Louisiana, attributable to the interest of Louisiana Land and Exploration Company. Columbia Gas desires United to transport quantities of said gas for the account of Columbia Gas. Accordingly, United and Columbia Gas have entered into a gas transportation agreement dated May 1, 1979, wherein Columbia Gas would deliver or cause to be delivered to United, up to 7,000 Mcf per day of gas for transportation for the account of Columbia Gas. United states that the deliveries would be made to United at an existing authorized metering and regulating station, owned and operated by United, located in Section 10, Township 18 South Range 16 East, Terrebonne Parish, Louisiana. United would transport and redeliver equivalent quantities of gas, less an allowance for fuel and company-used gas, to Columbia Gas through its affiliate, Columbia Gulf Transmission Company (Columbia Gulf), at the tailgate of the Exxon Lirette Gas Plant located in Terrebonne Parish, Louisiana.

United would charge Columbia Gas an amount per Mcf equal to one-half of United's jurisdictional transportation rate in effect from time to time in United's Southern Rate Zone as such may be determined by United, based on rate filings made from time to time with the Commission, less any amount included in such jurisdictional transportation rate which is attributable to fuel and unaccounted for gas. United states that the current jurisdictional transportation rate, exclusive of the cost of gas utilized in United's operation is 19.4 cents per Mcf in United's Southern Rate Zone. It is indicated that on the effective date, one-half of United's jurisdictional transportation rate in its Southern Rate Zone, excluding a component for gas utilized in the operation of United's pipeline system, is nine and seven-tenths cents per Mcf. It is further stated that United may file for transportation rate changes which shall become effective on the date any such new transportation rate filed with the Commission is approved or is placed into effect after suspension by the Commission and upon motion of United.

Any person desiring to be heard or to make any protest with reference to said application should on or before July 17, 1979, file with the Federal Energy Regulatory Commission, Washington, D.C. 20426, a petition to intervene or a protest in accordance with the requirements of the Commission's Rules of Practice and Procedure (18 CFR 1.8 or 1.10) and the Regulations under the Natural Gas Act (18 CFR 157.10). All protests filed with the Commission will be considered by it in determining the appropriate action to be taken but will not serve to make the protestants parties to the proceeding. Any person wishing to become a party to a proceeding or to participate as a party in any hearing therein must file a petition to intervene in accordance with the Commission's Rules.

Take further notice that, pursuant to the authority contained in and subject to jurisdiction conferred upon the Federal Energy Regulatory Commission by Sections 7 and 15 of the Natural Gas Act and the Commission's Rules of Practice and Procedure, a hearing will be held without further notice before the Commission or its designee on this application if no petition to intervene is filed within the time required herein, if the Commission on its own review of the matter finds that a grant of the certificate is required by the public convenience and necessity. If a petition for leave to intervene is timely filed, or if the Commission on its own motion believes that a formal hearing is required, further notice of such hearing will be duly given.

Under the procedure herein provided for, unless otherwise advised, it will be unnecessary for Applicant to appear or be represented at the hearing.

Kenneth F. Plumb,

Secretary.

[FR Doc. 79-20803 Filed 7-5-79; 8:45 am]

BILLING CODE 6450-01-M

[Project No. 2729—New York]

Power Authority of the State of New York; Availability of Environmental Impact Statement for Inspection

July 2, 1979.

Notice is hereby given that on or about July 6, 1979, as required by 18 CFR 2.81(b), a final environmental impact statement prepared by the Commission's staff pursuant to Section 102(2)(C) of the National Environmental Policy Act of 1966 (Public Law 91–100) was placed in the public files of the Federal Energy Regulatory Commission. This statement deals with the proposed 1000–MW Prattsville Pumped Storage Project located on Schoharie Creek in Delaware, Greene and Schoharie Counties, New York.

This statement is available for public inspection in the Commission's Office of Public Information, Room 1000, 825 North Capitol Street, N.E., Washington D.C. 20426 and its New York Regional Office located at 26 Federal Plaza, 22nd floor, New York, New York, 10007.

Copies may be ordered from the Commission's Office of Public Information, Washington, D.C. 20426.

Lois D. Cashell,

Acting Secretary.

[FR Doc. 79–20809 Filed 7–5–79; 8:45 am]

BILLING CODE 6450–01–M

Office of Energy Research

High Energy Physics Advisory Panel; Meeting

Pursuant to the provisions of the Federal Advisory Committee Act, (Pub. L. 92–463, 86 Stat. 770), notice is given of the following advisory committee meeting:

Name: High Energy Physics Advisory Panel

Date and time: Tuesday, July 31, 1979, Wednesday, August 1, 1979, 9:00 a.m. to 5:00 p.m. each day

Place: Department of Energy Building, Room A–410, Germantown, Maryland

Contact: Georgia M. Hildreth, Director, Advisory Committee Management, Department of Energy, Room 8G–031, 1000 Independence Avenue, SW, Washington, D.C. 20585, Telephone: 202–252–5187

Status: Open to the public

Purpose of committee: To provide advice and guidance on a continuing basis with respect to the high energy physics research program.

Public participation: Written statements may be filed with the Committee either before or after the meeting. Oral statements pertaining to agenda items may be made by contacting the Advisory Committee Management Office at the address or telephone number listed above. Requests must be received at least 5 days prior to the meeting and reasonable provision will be made to include the presentation on the agenda.

Transcripts: Available for public review and copying at the Freedom of Information Public Reading Room, Room GA–152, Forrestal Building, 1000 Independence Avenue, S.W., Washington, D.C., between 8:00 a.m. and 4:30 p.m., Monday through Friday, except Federal holidays.

Executive summary: Available approximately 30 days following the meeting. Contact Advisory Committee Management Office at above address.

Tentative agenda: Status of FY 1980 Budget
FY 1981 Budget Scenarios
European Competition in High Energy Physics
Chinese/US Cooperation in High Energy Physics

The Chairperson of the Committee is empowered to conduct the meeting in a fashion that will facilitate the orderly conduct of business.

Issued at Washington, D.C. on June 27, 1979.

Georgia Hildreth,

Director, Advisory Committee Management.

[FR Doc. 79–20748 Filed 7–5–79; 8:45 am]

BILLING CODE 6450–01–M

ENVIRONMENTAL PROTECTION AGENCY

[OPP–180310; FRL 1265–4]

California Department of Food and Agriculture; Issuance of Specific Exemption To Use Terramycin To Control Western X-disease in Sweet Cherries

AGENCY: Environmental Protection Agency (EPA), Office of Pesticide Programs.

SUMMARY: EPA has granted a specific exemption to the California Department of Food and Agruculture (hereafter referred to as the "Applicant") to use Terramycin on 9,226 acres of sweet cherries in San Joaquin and Stanislaus Counties, California, for the control of Western X-disease. The specific exemption expires on September 30, 1979.

FOR FURTHER INFORMATION CONTACT: Emergency Response Section, Registration Division (TS–767), Office of Pesticide Programs, EPA, 401 M Street, S.W., Room: E–124, Washington, D.C. 20460, Telephone: 202/426–2691. It is suggested that interested persons telephone before visiting EPA Headquarters, so that the appropriate files may be made conveniently available for review purposes.

SUPPLEMENTARY INFORMATION: The Applicant reported that cherries have been subject to cyclical epidemics of Western X-disease since its identification in the early 1940's. It appears that Western X-disease is transmitted from a host plant (Cholkecherry bush) to cherry trees via leafhoppers. Although leafhoppers do not normally live on cultivated cherry trees, the disease is transmitted through chance feedings. It has been noted that when chokecherry bushes are removed from areas close to infected trees, spread of X-disease drops sharply.

The symptoms in infected cherries may be quite varied, due either to different strains of the same virus, or variations in climate or rootstock. One common symptom in cherries appears to be that of undersized and off-color fruit with a general decline in production, resulting in cherries which are insipid in flavor. The diseased trees will appear normal during most of the growing season, but during late summer and early fall the leaves turn an orange-red color. There are no registered pesticides for control of this pest.

The Applicant proposed to make one application of Terramycin, which contains the active ingredient (a.i.) oxytetracycline hydrochloride, to 9,226 acres of sweet cherries grown in San Joaquin and Stanislaus Counties. According to the Applicant, these cherries are valued at $26 million and are severely threatened. The Applicant further reported that during the past four years, almost 30 percent of the cherry acreage has been lost with X-disease as a major contributor. In addition, because cherries require four to five years of non-bearing growth before production can commence, numerous acres of cherry trees are lost prior to harvesting.

EPA has determined that the residue level of Terramycin in cherries from the proposed plan should not exceed 0.1 part per million (ppm); this level is deemed adequate to protect the public health. The proposed tree injection method of application should significantly limit exposure to applicators and the environment.

After reviewing the application and other available information, EPA has determined that (a) a pest outbreak of Western X-disease has occurred or is about ot occur; (b) there is no pesticide presently registered and available to

control Western X-disease in California; (c) there are no alternative means of control, taking into account the efficacy and hazard; (d) significant economic problems may result if the Western X-disease is not controlled; and (e) the time available for action to mitigate the problems posed is insuffcent for a pesticide to be registered for this use. Accordingly, the Applicant has been granted a specific exemption to use the pesticide noted above until September 30, 1979, to the extent and in the manner set forth in the application. The specific exemption is also subject to the following conditions:

1. The product, Terramycin Tree Infection Formula (EPA Reg. No. 1007-79), may be used to control Western X-disease in sweet cherries;

2. Application will be at a rate of one to two liters of 1,320 ppm a.i. per tree;

3. Application is limited to 9,226 acres of cherries grown in the two counties named above;

4. A maximum of 2,400 kilograms of Terramycin may be applied;

5. Only trees which a knowledgeable expert has determined to be infected may be treated;

6. Application of Terramycin will not exceed one time per year and may not be made after ten percent bloom;

7. Terramycin may be applied by either tree infusion or pressure injection;

8. Applications will be made by or under the supervision of applicators State-certified for this category or pest control;

9. All applicable directions, restrictions, and precautions on the product label mst be adhered to;

10. The EPA shall be immediately informed of any adverse effects resulting from the use of Terramycin in connection with this specific exemption;

11. The Applicant is responsible for assuring that all of the provisions of this specific exemption are met and must submit a final report summarizing the results of this program by November 30, 1979; and

12. Cherries with oxytetracycline hydrochloride residues not exceeding levels of 0.1 ppm may enter interstate commerce. The Food and Drug Administration, U.S. Department of Health, Education, and Welfare, has been advised of this action.

(Section 18 of the Federal Insecticide, Fungicide, and Rodenticide Act (FIFRA), as amended in 1972, 1975, and 1978 (92 Stat. 819; 7 U.S.C. 136).

Dated: June 27, 1979.

James M. Conlon,

Associate Deputy Assistant Administrator for Pesticide Programs.

[FR Doc. 79-20323 Filed 7-5-79; 8:45 am]

BILLING CODE 6560-01-M

[OPP-180323; FRL 1265-5]

Delaware and New York; Issuance of Specific Exemptions To Use Permethrin and Fenvalerate To Control Colorado Potato Beetle on Potatoes

AGENCY: Environmental Protection Agency (EPA), Office of Pesticide Programs.

ACTION: Issuance of specific exemptions.

SUMMARY: EPA has granted specific exemptions to the Delaware Department of Agriculture and the New York Department of Environmental Protection (hereafter referred to as "Delaware", "New York", or the "Applicants") to use permethrin and fenvalerate for control of the Colorado potato beetle on 5,000 acres of potatoes in Delaware and 25,000 acres in New York. These exemptions expire on September 30, 1979.

FOR FURTHER INFORMATION CONTACT: Emergency Response Section, Registration Division (TS-767), Office of Pesticide Programs, EPA, 401 M Street, S.W., Room: E-124, Washington, D.C. 20460, Telephone: 202/426-2691. It is suggested that interested persons telephone before visiting EPA Headquarters, so that the appropriate files may be made conveniently available for review purposes.

SUPPLEMENTARY INFORMATION: The potato beetle is perhaps the best known beetle in the United States. Both the larvae and the adults feed on the leaves of potato plants. This feeding may result in defoliation of the vines which prevents development of tubers or greatly reduces yield.

According to the Applicants, the Colorado potato beetle has historically been a problem in the mid-Atlantic area. Although Guthion, Imidan, methoxychlor, Monitor, parathion, Furadan, and Thiodan are registered for use on potatoes to control this pest, the Applicants claim that these pesticides are unsatisfactory for Colorado potato beetle control due to pesticidal resistance. Temik is registered for an at planting use and will only control beetles at planting and their first brood. Last year Vydate was registered for control of the beetle on potatoes; however, data indicate that Vydate is effective against the larvae only, not the adult, and that it is not so effective as permethrin. Delaware estimates a loss of one million dollars and New York estimates a loss of six to fourteen million dollars due to the Colorado potato beetle, if an effective program is not carried out.

The Applicants proposed to use permethrin, manufactured by FMC Corporation under the trade name Pounce, and by ICI Americas, Inc., under the trade name Ambush, and Pydrin, manufactured by Shell Chemical Co., at a rate of 0.1 to 0.2 pound active ingredient (a.i.) per acre per application in Delaware, and 0.2 pound a.i. per acre per application in New York, observing a 7-day pre-harvest interval, using ground or air equipment. State-certified private or commercial applicators will make a maximum of six applications in Delaware and seven applications in New York. Data submitted for this use indicate that permethrin and fenvalerate are effective against the Colorado potato beetle (adult and larvae) at the proposed rates.

EPA has determined that residues of permethrin on potatoes would not be expected to exceed 0.1 part per million (ppm) as a result of the proposed use provided that no more than seven applications of permethrin are made and a 7-day pre-harvest interval is observed. Residues of fenvalerate resulting from the proposed use are not expected to exceed 0.02 ppm in or on potatoes, meat, and milk. These residue levels have been judged to be adequate to protect the public health.

Since permethrin and fenvalerate are highly toxic to bees and aquatic vertebrates and invertebrates, EPA has imposed appropriate restrictions to protect them. No unreasonable hazard to the environment is expected from this program.

After reviewing the application and other available information, EPA has determined that (a) pest outbreaks of the Colorado potato beetle have occurred; (b) there is no effective pesticide presently registered and available for use to control the Colorado potato beetle in Delaware and New York; (c) there are no alternative means of control, taking into account the efficacy and hazard; (d) significant economic problems may result if the Colorado potato beetle is not controlled; and (e) the time available for action to mitigate the problems posed is insufficient for a pesticide to be registered for this use. Accordingly, the Applicants have been granted specific exemptions to use the pesticides noted above until September 30, 1979, to the extent and in the manner set forth in the applications. The specific

exemptions are also subject to the following conditions:

1. The products Ambush, manufactured by ICI Americas, Inc., Pounce, manufactured by FMC Corporation, and Pydrin, manufactured by Shell Chemical Co., may be applied;

2. These pesticides may be applied at a rate of 0.1 to 0.2 pound a.i. per acre in Delaware and 0.2 pound a.i. per acre in New York;

3. A maximum of six applications in Delaware and seven applications in New York of either permethrin or fenvalerate may be made. No field may be treated with both fenvalerate and permethrin. A pre-harvest interval of seven days is imposed;

4. A maximum of 5,000 acres in Delaware and 25,000 acres in New York may be treated;

5. Applications will be made with air or ground equipment;

6. Spray mixture volumes of 40–100 gallons of water in Delaware, and 35–125 gallons of water in New York will be applied by ground equipment, 5–10 gallons by aircraft;

7. Applications will be made by State-certified private or commercial applicators or persons under the direct supervision of a State-certified applicator;

8. Ambush, Pounce, and Pydrin are toxic to fish, birds, and other wildlife. They must be kept out of any body of water. They must not be applied where run-off is likely to occur. They may not be applied when weather conditions favor drift from treated areas. Care must be taken to prevent contamination of water by cleaning of equipment or disposal of wastes;

9. In order to minimize spray drift, the following restrictions will be observed for applications of permethrin and Pydrin:

a. Aerial applications will not be made when wind speed exceeds five miles per hour;

b. A buffer zone of 200 feet (horizontal distance) between treated areas and aquatic areas will be observed; and

c. Aerial applications should be staggered in time in areas where fish and shellfish are important resources.

10. Permethrin and fenvalerate are highly toxic to bees exposed to direct treatment or residues on crops or weeds. They may not be applied or allowed to drift to weeds in bloom on which an economically significant number of bees are actively foraging. Protective information may be obtained from the State Cooperative Agricultural Extension Services;

11. Potatoes treated according to the above provisions will not have residues of permethrin in excess of 0.1 ppm, or residues of fenvalerate in excess of 0.02 ppm. Residues of fenvalerate in meat and milk will not exceed 0.02 ppm. Potatoes with residues of permethrin or fenvalerate which do not exceed these levels may enter interstate commerce. The Food and Drug Administration, U.S. Department of Health, Education, and Welfare, has been advised of this action;

12. A 60-day crop rotation restriction is imposed for permethrin. For fenvalerate: (a) a 12-month root crop rotation restriction is imposed, and (b) a 60-day crop rotation restriction for any crop is imposed;

13. The EPA will be immediately informed of any adverse effects resulting from the use of permethrin or fenvalerate in connection with these exemptions; and

14. The Applicants are each responsible for assuring that all of the provisions of the specific exemption for that State are met and must submit a report summarizing the results of this program by February 28, 1980.

(Section 18 of the Federal Insecticide, Fungicide, and Rodenticide Act (FIFRA), as amended in 1972, 1975, and 1978 (92 Stat. 819; 7 U.S.C. 136.)

Dated: June 27, 1979.

James M. Conlon,

Associate Deputy Assistant Administrator for Pesticide Programs.

[FR Doc. 79-20925 Filed 7-5-79; 8:45 am]

BILLING CODE 6560-01-M

[FRL 1266-2]

Environmental Measurements Advisory Committee Science Advisory Board; Open Meeting

As required by Pub. L. 92-463, notice is hereby given that a meeting of the Environmental Measurements Advisory Committee of the Science Advisory Board will be held beginning at 9:00 a.m. July 30 and 31 in the Clubroom, Ramada Inn, Rosslyn.

This is the second meeting of the Environmental Measurements Committee. The agenda includes a review of the quality assurance programs for monitoring, a review of the compliance monitoring program for water permits and a discussion of the report of the Information Policy Study Group.

The meeting is open to the public. Any member of the public wishing to attend, participate, or obtain information should contact Dr. Douglas Seba, Executive Secretary or Ms. Sarah M. Mills, Staff Assistant, (202) 472-9444.

Dated: July 2, 1979.

Burton Levy,

Acting Staff Director, Science Advisory Board.

[FR Doc. 79-20920 Filed 7-5-79; 8:45 am]

BILLING CODE 6560-01-M

[OPP-50428A; FRL 1265-3]

Issuance of Experimental Use Permit; Correction

On Wednesday, June 13, 1979 (44 FR 33955), information appeared pertaining to the issuance of an experimental use permit, No. 8730-EUP-7, to Herculite Products, Inc. In the 4th and 5th lines, "n-tetradecyl formate" should have read "*cis*-7,8-epoxy-2-methyloctadecane." This experimental use permit allows the use of 14.53 pounds of the insecticide *cis*-7,8-epoxy-2-methyloctadecane on forested and wooded residential areas to evaluate control of gypsy moths. A total of 505 acres is involved; the program is authorized only in the States of Maryland, Massachusetts, and Wisconsin. The experimental use permit is effective from April 3, 1979 to April 3, 1980. (PM-17, Franklin Gee, Room: E-229, Telephone: 202/426-9417.)

Dated: June 27, 1979.

Douglas D. Campt,

Director, Registration Division.

[FR Doc. 79-20922 Filed 7-5-79; 8:45 am]

BILLING CODE 6560-01-M

[FRL 1265-2; OPP-180301]

Nebraska Department of Agriculture; Issuance of Specific Exemption To Use Atrazine To Control Grasses and Broadleaf Weeds in Proso Millet

AGENCY: Environmental Protection Agency (EPA), Office of Pesticide Programs.

ACTION: Issuance of a specific exemption.

SUMMARY: EPA has granted a specific exemption to the Nebraska Department of Agriculture (hereafter referred to as the "Applicant") to use atrazine to control grasses and broadleaf weeds in 55,000 acres of proso millet in Nebraska. The specific exemption expires on July 15, 1979.

FOR FURTHER INFORMATION CONTACT: Emergency Response Section, Registration Division (TS-767), Office of Pesticide Programs, EPA, 401 M Street, SW., Room: E-124, Washington, D.C. 20460, Telephone: 202/426-2691. It is suggested that interested persons telephone before visiting EPA Headquarters so that the appropriate

files may be made conveniently available for review purposes.

SUPPLEMENTARY INFORMATION: Proso millet is a minor crop grown for grain along the Atlantic seaboard and the northern half of the Great Plains. It is a short-season plant that often requires less than seventy days to mature. Although it is used in soups and the ground meal is eaten as a cooked cereal, its major commerical use is in chicken feeds, birdseed mixtures and livestock feed. Proso millet can also be foraged or cut and dried for hay.

According to the Applicant, grasses and broadleaf weeds are common problems in millet. The herbicide 2,4-D amine plus dicamba is State-registered for post-emergence weed control; however, the Applicant has reported erratic control with this herbicide depending upon weather conditions. In addition, it will not control some of the annual grasses such as stinkgrass and green foxtail.

The Applicant requested permission to make a single pre-emergence or early post-emergence application of atrazine (2-chloro-4-(ethylamino)-6-(isopropylamino)-S-triazine) at a rate of one-half to one pound active ingredient per acre. The application will be made by State-licensed commerical applicators or qualified growers using ground or air equipment. The Applicant estimated that losses of up to $24 per acre could occur if no effective method of control is made available.

EPA has determined the use of atrazine as specified in this exemption should not result in residues of atrazine and its metabolites in excess of 0.25 part per million (ppm) in or on millet grain or 5 ppm in or on millet straw or green fodder and forage. These levels are deemed adequate to protect the public health. It has also determined that this use should not cause any unreasonable adverse effect to the environment or any non-target species.

After reviewing the application and other available information, EPA has determined that (a) a pest outbreak of grasses and broadleaf weeds in millet has occurred or is about to occur; (b) there is no pesticide presently registered and available for use to control grasses and broadleaf weeds in Nebraska; (c) there are no alternative means of control, taking into account the efficacy and hazard; (d) significant economic problems may result if grasses and broadleaf weeds are not controlled; and (e) the time available for action to mitigate the problems posed is insufficient for a pesticide to be registered for this use. Accordingly, the Applicant has been granted a specific exemption to use the pesticide noted above until July 15, 1979, to the extent and in the manner set forth in the application. The specific exemption is also subject to the following conditions:

1. A single pre-emergence or early post-emergence application of an EPA-registered atrazine product may be made at a rate of one-half to one pound active ingredient per acre;

2. Applications will be made with ground or air equipment; if applied by air, an atrazine product registered for aerial application must be used;

3. A maximum of 55,000 acres may be treated;

4. A maximum of 55,000 pounds of active ingredient may be used;

5. All applications will be made by State-certified commerical or private applicators. The University of Nebraska Extension Service will furnish information pertaining to timing, rates, and procedures to the applicators;

6. Precautions will be taken to avoid or minimize spray drift to non-target areas;

7. Residue levels of atrazine are not expected to exceed 0.25 ppm on proso millet grain and 5.0 ppm on the straw and green forage and fodder. Proso millet grain and straw with residues which are not in excess of these levels may enter interstate commerce. The Food and Drug Administration, U.S. Department of Health, Education, and Welfare has been advised of this action;

8. All applicable directions, restrictions, and precautions on the EPA-approved label must be followed;

9. The Applicant is responsible for assuring that all of the provisions of this specific exemption are met and must submit a report summarizing the results of this program by October 30, 1979; and

10. EPA shall be immediately informed of any adverse effects resulting from the use of atrazine in connection with this exemption.

(Section 18 of the Federal Insecticide, Fungicide, and Rodenticide Act (FIFRA), as amended in 1972, 1975, and 1978, (92 Stat. 819; 7 U.S.C. 136))

Dated: June 27, 1979.

James M. Conlon,

Deputy Assistant Administrator for Pesticide Programs.

[FR Doc. 79-20924 Filed 7-5-79; 8:45 am]
BILLING CODE 6560-01-M

[FRL 1266-1]

Science Advisory Board, Toxic Substances Subcommittee; Open Meeting

Under Public Law 92-463, notice is hereby given that a two day meeting of the Subcommittee on Toxic Substances of the Science Advisory Board will be held on Tuesday and Wednesday, July 24 and 25, 1979 in the Administrator's conference room (first day) and in room 2126 (second day), Waterside Mall, 401 M Street, SW., Washington, D.C. The Tuesday session will start at 1:15 p.m., and the Wednesday session will start at 9:30 a.m.

The Subcommittee will be meeting for the fifth time, the purposes being to review the proposed Health Effects Test Standards (Section 4 of the Toxic Substances Control Act) and the proposed Good Laboratory Practice Standards.

The meeting will be open to the public. Any member of the public wishing to attend or to submit a paper should contact the Secretariat, Science Advisory Board(A-101), U.S. Environmental Protection Agency, Washington, D.C. 20460, by c.o.b. July 20, 1979. Please ask for Mrs. Shirley Smith. The telephone number is (202) 755-0263.

Dated: July 2, 1979.

Burton Levy,

Acting Staff Director, Science Advisory Board.

[FR Doc. 20921 Filed 7-5-79; 8:45 am]
BILLING CODE 6560-01-M

[FRL 1266-5]

Waiver of 1981 Motor Vehicle Emission Standard for Oxides of Nitrogen (NO_x); Notice of Amended Date of Closing of Public Hearing Record

AGENCY: Environmental Protection Agency (EPA).

ACTION: Notice of the extension of the period for public comment on automobile manufacturers' requests for waiver of 1981 NO_x emission standard to permit use of diesel engine technology in light-duty vehicles.

SUMMARY: This notice announces that the July 2, 1979, closing date for submission of comments and information requests for waiver of the 1981 NO_x standard to permit use of

diesel technology in light-duty vehicles has been extended to July 13, 1979.

ADDRESS: All comments and information on manufacturers' application for waiver of the 1981 NO_x standard should be submitted to: U.S. Environmental Protection Agency, Central Docket Section (A-130), Room 2903 B Waterside Mall, 401 M Street, S.W., Washington, D.C. 20460 (Docket Number EN-79-3).

FOR FURTHER INFORMATION CONTACT: Ms. Carolyn Blackstone, Mobile Source Enforcement Division (EN-340), U.S. Environmental Protection Agency, 401 M Street S.W., Washington D.C. 20460; (202) 755-0944.

SUPPLEMENTARY INFORMATION: EPA conducted public hearings on June 18-21, 1979, under section 202(b)(6)(B) of the Clean Air Act, as amended, to consider requests by General Motors Corporation (GM), Volvo, Mercedes-Benz, Volkswagen and Peugeot for waiver of the 1981 model year light-duty vehicle emission standard for NO_x to permit use of diesel engine technology. The June 6, 1979, Federal Register notice (43 FR 32470) announcing the public hearing stated that all comments and other information should be submitted to the public record before July 2, 1979.

GM has requested an extension of the closing date of the public record to July 13, 1979, to permit GM further opportunity to submit information to supplement its waiver application. The closing date of the public comment period is hereby extended to July 13, 1979.

Dated: July 3, 1979.

Benjamin R. Jackson,

Deputy Assistant Administrator for Mobile Source and Noise Enforcement.

[FR Doc. 79-21034 Filed 7-3-79; 1:40 pm]

BILLING CODE 6560-01-M

FEDERAL COMMUNICATIONS COMMISSION

[Report No. A-1]

AM Broadcast Applications Accepted for Filing and Notification of Cut-Off Date

Released: July 2, 1979.

Cutoff Date: August 17, 1979.

Notice is hereby given that the applications listed in the attached appendix are hereby accepted for filing. They will be considered to be ready and available for processing after August 17, 1979. An application, in order to be considered with any other application appearing on the attached list or with any application on file by the close of business on August 17, 1979, which involves a conflict necessitating a hearing with any application on this list, must be substantially complete and tendered for filing at the offices of the Commission in Washington, D.C., not later than the close of business on August 17, 1979.

Petitions to deny any application on this list must be on file with the Commission not later than the close of business on August 17, 1979.

Federal Communications Commission

William J. Tricarico,

Secretary.

Appendix

BP-20,398 (KIQI), Hayward, California, San Francisco Wireless Talking Machine Co., Has: 1010 kHz, 10 kW, DA-Day (San Francisco). Req: 1010 kHz, 5 kW, 50 kW-LS, DA-2, U (Hayward).

BP-20,457 (WXEW), Yabucoa, Puerto Rico, James Calderon, Has: 840 kHz, 0.25 kW, Day, Req: 840 kHz, 5.0 kW, DA-N, U.

BP-20,513 (WEAW), Evanston, Illinois, Broadcast Communications, Inc., Has: 1330 kHz, 5 kW, DA-Day, Req: 1330 kHz, .5 kW, 5 kW-LS, DA-2, U.

BP-20,702 (WTGF), Pickens, South Carolina, TGF Broadcasting Company, Has: 1540 kHz, 1 kW, Day, Req: 1540 kHz, 10 kW, (1 kW-CH), U.

BP-20,770 (WOIC), Columbia, South Carolina, Nuance Corporation, Has: 1320 kHz, 1 kW, 5 kW-LS, DA-N, U, Req: 1320 kHz, 5 kW, DA-N, U.

BP-21,226 (new), Centreville, Mississippi, Western Mississippi Broadcasters, Inc., Req: 1580 kHz, 250 W, Day.

BP-21,246 (WFIV), Kissimmee, Florida, Radio Florida Broadcasters, WFIV, Has: 1080 kHz, 5 kW, Day, Req: 1080 kHz, 2.5 kW, 10 kW-LS, DA-2, U.

BP-21,266 (new), Harriman, Tennessee, Morgan Broadcasting Company, Req: 1230 kHz, 250 W, U.

BP-780717AD (KEZE), Millwood, Washington, The Great American Radio Corp., Has: 1380 kHz, 5 kW, Day (Spokane), Req: 1380 kHz, 2.5 kW, 5 kW-LS, DA-2, U (Millwood).

BP-780804AF (KOQT), Ferndale, Washington, Help Ministries, Inc., Has: 1550 kHz, 1 kW, Day (Bellingham), Req: 1550 kHz, 10 kW, DA-2, U (Ferndale).

BP-780814AY (new), Eddyville, Kentucky, Lyon County Broadcasting Co., Req: 900 kHz, 250 W, DA-Day.

BP-780825AA (new), Sycamore, Illinois, Hometown Communications, Inc., Req: 1560 kHz, 250 W, Day.

BP-780828AF (new), Blue Ridge, Georgia, Blue Ridge Broadcasting Co., Req: 1440 kHz, 500 W, Day.

BP-780828AH (KNCO), Grass Valley, California, Nevada County Broadcasters, Has: 1250 kHz, 1 kW, DA-Day, Req: 1250 kHz, 500 W, 1 kW-LS, DA-2, U.

BP-780829DZ (new), Solvang, California, Santa Ynez Valley Broadcasting Co., Req: 1550 kHz, 500 W, Day.

BP-780925AA (new), Pinehurst, North Carolina, 107, Inc., Req: 550 kHz, 1 kW, DA-Day.

BP-780925AS (WAUC), Wauchula, Florida, Poucher Broadcasting, Inc., Has: 1310 kHz, 500 W, Day, Req: 1310 kHz, 5 kW, DA-Day.

BP-780926AA (KYFR), Shenandoah, Iowa, Family Stations, Inc., Has: 920 kHz, 500 W, 1 kW-LS, U, Req: 920 kHz, 2.5 kW, DA-1, U.

BP-781002AJ (new), Thief River Falls, Minnesota, Olmstead and Ives Broadcasting, Req: 1460 kHz, 500 W, Day.

BP-781005AC (WIPC), Lake Wales, Florida, Salter Broadcasting Co., Has: 1280 kHz, 1 kW, Day, Req: 1280 kHz, 500 W, 1 kW-LS, DA-N, U.

BP-781010AW (KMTI), Manti, Urah, Sanpete County Broadcasting Co., Has: 1340 kHz, 250 W, U, Req: 1590 kHz, 1 kW, 5 kW-LS, DA-N, U.

BP-781011AA (KYJC), Medford, Oregon, Matthias Enterprises, Has: 1230 kHz, 250 W, 1 kW-LS, U, Req: 610 kHz, 5 kW, DA-2, U.

BP-781019AI (WHEO), Stuart, Virginia, Community Broadcasting Inc., Has: 1270 kHz, 1 kW, Day, Req: 1270 kHz, 5 kW, Day.

BP-781024AI (WBIN), Benton, Tennessee, Stonewood Communications Corp., Has: 1540 kHz, 250 W, Day, Req: 1540 kHz, 1 kW (500W-CH), Day.

BP-781025AA (WJIC), Salem, New Jersey, Jersey Information Center, Inc., Has: 1510 kHz, 250 W, Day, Req: 1510 kHz, 2.5 kW, DA-Day.

BP-781031AE (NEW), Jackson, Minnesota, Sturgis Radio, Inc., Req: 1190 kHz, 5 kW, DA-Day.

BP-781103AM (WYIS), Phoenixville, Pennsylvania, Hart Broadcasting Co, Has: 690 kHz, 500 W, DA-Day, Req: 690 kHz, 1 kW, DA-Day.

BP-781106AU (KRDZ), Wray, Colorado, KRDZ Broadcasters, Inc., Has: 1470 kHz, 1 kW, Day, Req: 1440 kHz, 5 kW, Day.

BP-781108AG (NEW), Bowman, North Dakota, Larry L. Kemnitz, Req: 1340 kHz, 250 W, 1 kW-LS, U.

BP-781109AE (WKEA), Scottsboro, Alabama, KEA Radio, Inc., Has: 1330 kHz, 1 kW, Day, Req: 1330 kHz, 5 kW, Day.

BP-781115AK (NEW), Willits, California, Redwood Radio Empire, Req: 1250 kHz, 2.5 kW, DA-Day.

BP-781121AF (KPOP), Roseville, California, KPOP Radio, Has: 1110 kHz, 500 W, DA-N, U, Req: 1110 kHz, 500 W, 5 kW-LS, DA-2, U.

BP-781128AE (WCOX), Camden, Alabama, King and King, Has: 1540 kHz, 1 kW, Day, Req: 1450 kHz, 250 W, 1 kW-LS, U.

BP-781129AI (NEW), Myrtle Creek, Oregon, Reliable Oregon Radio, Req: 1360 kHz, 5 kW, Day.

BP-781201AC (NEW), Dunlap, Tennessee, Morgan Broadcasting Company, Req: 1190 kHz, 500 W, Day.

BP-781208AC (WYNX), Smyrna, Georgia, Jonquil Broadcasting Company, Inc., Has: 1550 kHz, 10 kW, Day, Req: 1550 kHz, 500 W, 10 kW-LS, DA-N, U.

BP-781208AF (WKDL), West Helena, Arkansas, Twin Cities Broadcasting Co., Has: 1600 kHz, 1 kW, Day (Clarksdale,

Mississsippi), Req: 1600 kHz, 1 kW, Day (West Helena, Arkansas).

BP-781212AC (WRNR), Martinsburg, West Virginia, Shenandoah Communications, Inc., Has: 740 kHz, 250 W, DA-Day, Req: 740 kHz, 500 W, DA-Day.

BP-781221AJ (WQRO), Huntington, Pennsylvania, Raystown Radio, Inc., Has: 1080 kHz, 500 W, DA-Day, Req: 1080 kHz, 1 kW (500 W-CH), DA-Day.

BP-781226AG (KJEM), Bentonville, Arkansas, JEM Broadcasting Co., Has: 1190 kHz, 250 W, Day, Req: 1190 kHz, 500 W, Day.

BP-781229AE (NEW), Meeker, Colorado, White River Broadcasting Co., Req: 1450 kHz, 250 W, 1 kW-LS, U.

BP-790108AN (WVWI), Charlotte Amalie, Virgin Islands, Thousand Island Corp., Has: 1000 kHz, 1 kW, U, Req: 1000 kHz, 1 kW, 5kW-LS, U.

BP-790122AH (NEW), Dahlonega, Georgia, Lumpkin County Broadcasting Co., Req: 1390 kHz, 1 kW, DA-Day.

BP-790122AS (KMJC), El Cajon, California, Lee Bartell and Associates, Has: 910 kHz, 1 kW, DA-2, U, Req: 910 kHz, 5 kW-LS, DA-2, U.

BP-790123AF (KADE), Boulder, Colorado, Centennial Wireless, Inc., Has: 1190 kHz, 1 kW, Day, Req: 1190 kHz, 5 kW, Day.

BP-790124AF (KIRV), Fresno, California, New Life Enterprises, Inc., Has: 1510 kHz, 500 W, Day, Req: 1510 kHz, 10 kW, DA-Day.

BP-790126AD (NEW), Sand Point, Alaska, Sand Point Broadcasting Incorporated, Req: 840 kHz, 2.5 kW, 5 kW-LS, U.

BP-790530AO (NEW), Warner Robins, Georgia, WAFA Broadcasting, Inc., Req: 1470 kHz, 1 kW, 500 W-LS, DA-N, U.

Application deleted from Public Notice of October 19, 1977 (Mimeo 90247) (42 FR 56543)

BP-20,336 (NEW), Warner Robins, Georgia, WAFA Broadcasting, Inc., Req: 1470 kHz, 1 kW, 500 W-LS, DA-N, U.

(Assigned new File No. BP-790530AO)

[FR Doc. 79-20359 Filed 7-5-79; 8:45 am]

BILLING CODE 6712-01-M

[BC Docket No. 79-166; FCC 79-402]

Preparations for a Region 2 Administrative Radio Conference for AM Broadcasting

AGENCY: Federal Communications Commission.

ACTION: Notice of Inquiry.

SUMMARY: This *Inquiry* is instituted in order to solicit comments to assist the FCC in developing recommendations for the U.S. position at a Region 2 Administrative Radio Conference for AM Broadcasting.

DATES: Comments must be filed on or before August 15, 1979, and reply comments must be filed on or before August 31, 1979.

ADDRESSES: Federal Communications Commission, Washington, D.C. 20554.

FOR FURTHER INFORMATION CONTACT: Wilson A. LaFollette, Broadcast Bureau, (202) 632-9660.

SUPPLEMENTARY INFORMATION:

In the matter of preparations for a Region 2 Administrative Radio Conference for AM Broadcasting; Notice of Inquiry.

Adopted: June 22, 1979.

Released: July 2, 1979.

By the Commission.

1. This *Inquiry* is being instituted in order to solicit comments to assist the FCC in developing recommendations for the U.S. position at the above-captioned Conference.

Background

2. At the second meeting of the Inter-American Telecommunications Conference ("CITEL") [1] held in November, 1975, it was resolved to undertake regional planning of the broadcasting service at a Regional Administrative Radio Conference on Broadcasting in Hectometric bands (the AM broadcasting band) in Region 2.[2] Accordingly, preparations have proceeded for a Regional Conference to be convoked by the International Telecommunication Union ("ITU").

3. In order to begin drafting technical planning criteria and a Regional Agreement, CITEL formed a working group of broadcasting specialists nominated by Administrations from Region 2. Personnel from the FCC have represented the United States at the four meetings of the working group that have been held thus far.

4. The third meeting of CITEL held in Buenos Aires, Argentina, during March, 1979, approved a schedule of activities which include tentative dates, April 1980 and November 1981, for two planned sessions of the Conference. However, the Administrative Council of the ITU which met during June, 1979, approved dates of March 10, 1980 for convening of the first session and November, 1981 for the second session. The first session of the Conference will be convened to establish the technical bases for planning. The second session will develop a Regional plan and which will serve as the instrument for implementation of the plan as well as any subsequent modifications thereto. An inventory of broadcasting frequency assignments and procedures for its modification will be an integral part of the plan and agreement.

Inquiry

5. The importance of the Conference to the U.S. cannot be over-emphasized. It is expected that the Regional Agreement resulting from the Conference will affect in varying degrees existing bilateral and multi-lateral broadcasting agreements. It is expected that the Regional Agreement will play an important part in establishing permissible interference levels, classification of AM broadcasting channels, channel spacing and power levels. Such decisions may well influence the future distribution of radio services in this country as well as the accommodation of technical innovations (such as AM stereo).

6. As in the past, the Commission will coordinate its views with those of the National Telecommunications and Information Administration (NTIA) and the Department of State in the development of FCC recommended proposals for the Region 2 Administrative Radio Conference. The Department of State, which has final responsibility within the United States for the submission of proposals to Conferences of the ITU, will then consider the Commission recommended proposals, as well as other relevant information which may be brought before it, for submission to the Region 2 Conference. Thus, it should be noted that this Inquiry and any subsequent additional Notices of Inquiry in this proceeding, are not rule making actions. However, after the Regional Conference and U.S. ratification of the Final Acts, the Commission will complete any needed rule making actions necessary to conform the FCC rules with the Regional Agreement.

7. Accordingly, comments and recommendations for the Regional technical planning criteria for the subjects listed below and text of the Regional Agreement are requested. It is emphasized that these criteria are to be used for providing effective and efficient planning on an international/regional basis. The subjects to be addressed are as follows:

A. Definitions

B. Broadcasting Standards for use in the existing broadcasting band, 535-1605 kHz

1. Class of emission
2. Necessary bandwidth of emission
3. Channel spacing
4. Frequency tolerance
5. Protection ratios
6. Required Field Strength

---

[1] CITEL is the body set up under the Organization of American States ("OAS") for the purpose of coordinating inter-American telecommunications matters.

[2] ITU Region 2 delineates an area including all of the Americas (North, Central, and South America and the Caribbean area) as well as Hawaii and Greenland.

7. Values of Required Field Strength to be Used in the Plan (for each class of station)

C. Propagation Prediction Methods

1. Groundwave

2. Sky-wave (reflected-wave)

D. Methods for Calculating Objectionable Interference

E. Techniques for Interference Reduction

1. Use of minimum necessary power to achieve required coverage

2. Used of directional antennas

F. Terms of the Regional Agreement

G. Any Other Matters Believed Pertinent to this Proceeding

Appendices I, II and III to this *Inquiry* are current draft documents under consideration within the CITEL working group. Comments are requested on the above subjects, in general, as well as on the draft documents of the CITEL working group in particular.

8. The FCC has before it for consideration petitions for rule making on the topics of (1) reduction of AM channel separation from 10 kHz to 9 kHz [3] and (2) use of 1 kW nighttime power for class IV stations.[4] These two rule making areas are not being specifically addressed in this *Inquiry* because they involve national issues which must be resolved before an international position on them can be developed. Therefore, separate notices of inquiry on these matters are being expedited in order that the results of these notices can be considered within the proceedings of this *Inquiry*, as appropriate. Similarly, the results of any other proceedings, such as the Clear Channel proceeding,[5] will be appropriately coordinated.

9. Pursuant to applicable procedures set forth in Section 1.415 of the Commission's Rules, interested parties may file comments on or before August 15, 1979, and reply comments on or before August 31, 1979. All relevant and timely comments and reply comments will be considered by the FCC before further action is taken in this proceeding.

10. In accordance with the provisions of Section 1.419 of the Commission's Rules and Regulations, an original and five copies of all comments, replies or other documents filed in this proceeding shall be furnished to the Commission. Additionally, because this proceeding will cross several Bureau and Office lines of responsibility, as well as involve extensive coordination with the Executive Branch, an additional thirteen copies will be required of all formal comments. Members of the general public who wish to express their interest by participating informally in this proceeding may do so by submitting one copy of their comments, without regard to form, provided that the Docket number of this *Inquiry* is specified in the heading. Such informal participants who desire that responsible members of the staff receive a personal copy and to have an extra copy available for the Commissioners may file an additional five copies. Responses will be available for public inspection during regular business hours in the Commission's Public Reference Room (Room 239) at its headquarters in Washington, D.C. (1919 M Street, NW.). Further information concerning this proceeding may be obtained from Wilson A. LaFollette, Broadcast Bureau, (202) 632-9660.

Federal Communications Commission.

William J. Tricarico,

Secretary.

[3] RM-3312 submitted by the NTIA.

[4] RM-2023 submitted by the Community Broadcasters Association; RM-2255 submitted by Paul Dean Ford; RM-3228 submitted by Douglas Broadcasting Corporation.

[5] Docket Number 20642.

Appendix I—Draft Definitions—Definitions, Technical Standards and Criteria for Use in the Regional Broadcasting Plan (Revised as of March 1979)

Definitions and Symbols

A. Definitions

In addition to the definitions given in the Radio Regulations, the following apply to the Plan for Region 2:

1) Radiobroadcasting channel: Band of frequencies for the transmission or radiobroadcasting signals by one station, including a carrier and two sidebands with the carrier frequency. Each channel shall be designated by its carrier frequency.

2) Class A station: A station protected against interference so that it can cover extensive primary and secondary service areas.

3) Class B station: A station protected against interference so that it can cover one or more population centers, and the rural areas contiguous to them, located in its primary service area.

4) Class C station: A station protected against interference so that it can cover a city or town and the contiguous suburban areas, located in its primary service area.

5) Intermodulation products: Spurious emission generated by the modulation of each component of a complex wave by the effect of the other components, producing waves whose frequencies are equal to the sums and differences of the multiples of the components of the original complex wave.

6) Harmonic emission: (of a radioelectrical emission): Spurious emission in multiple frequencies of the frequency band occupied by an emission.

7) Parasitic emission: (of a radioelectrical emission): Spurious emission generated accidentally in frequencies that are both independent from the carrier, characteristic or harmonic frequencies and independent of the frequencies of the oscillations in the carrier or characteristic frequencies.

8) Characteristic field strength: The horizontal field strength corrected for absorption, of a groundwave signal radiated by a station when the power fed into an omnidirectional antenna with an homogeneous ground system is 1 kilowatt and the reference distance is one kilometer or one mile.

9) Protected contour: Continuous line joining points where the field strength has a value that determines the areas of primary or secondary service that are free from interference.

10) Radiofrequency protection ratio: Ratio of the desired signal to the radio frequency interference signal which, in well-defined conditions, makes it possible to obtain the audiofrequency protection radio at the output of a receiver. These specified conditions include various parameters such as the frequency separation between the desired carrier and the interference, the emission characteristics (type and percent of modulation, etc.), levels of receiver input and output, the characteristics of the receiver (selectivity, sensitivity to intermodulation, etc.).

11) Usable field strength (Eu): Minimum value of the field strength required to provide satisfactory reception, under specified conditions in the presence of natural noise, industrial noise, and interference in a real situation (or resulting from a frequency plan).

12) Nominal usable field strength (Enom): Minimum convention value of field strength required to provide satisfactory reception, under specified conditions, in the presence of natural noise, industrial noise and interference from other transmitters. The value of nominal usable field strength is that employed as reference for planning.

13) Ground wave signal: Radiated signal that is propagated by the surface of the earth or near it and that has not been reflected by the ionosphere.

14) Reflected wave (sky wave): Radiated signal that has been reflected by the ionosphere.

15) Primary service area: Service area delimited by the groundwave within the

contour in which the calculated field strength is equal to or greater than the nominal usable field.

16) Secondary service area: Service area delimited by the ionospheric reflected wave within the contour in which the level of field strength is equal to or greater than the nominal usable field. The signal is subject to intermittent variations in field strength.

17) Objectionable interference: Interference caused by a signal exceeding the maximum permissible field strength within the protected contour according to the terms of this Agreement.

18) Daytime operation: Operation between the times of local sunrise and local sunset.

19) Nighttime operation: Operation between the times of local sunset and local sunrise.

20) Relfected wave signal, 10% of the time—the average value of a reflected wave that is not exceeded more than 10% of the period of observation.

21) Reflected wave signal, 50% of the time—the average value of a reflected wave signal that is not exceeded more than 50% of the period of observation.

22) Synchronous operation—the operation of two or more broadcasting stations, transmitting the same program simultaneously on the same carrier frequency.

Symbols Employed

Hz=hertz (c/s)
kHz=kilohertz (kc/s)
W=Watt
kW=Kilowatt
V/m=Volt/meter
mV/M=millivolt/meter
uV/m=microvolt/meter
db=decibel

Appendix II—Draft Technical Planning Criteria—Technical Criteria for Use in Regional Planning

1. *Class of Emission*

The Plan will be established for a system with double sideband amplitude modulation with full carrier (A3).

Note 1.—Classes of emission other than A3, for stereophonic systems, may also be used on the conditions that the energy level outside the required band width does not exceed that normally expected in a DSB–AM System and that it comply with the condition of being able to be received by receivers with envelope detectors without increasing appreciably the level of distortion.

Note 2.—Some delegations reserved their position regarding the permission to use systems other than A3. The agreement of all the administrations concerned should be obtained by every means before a class of emission other than DSB–AM is brought into operation.

It is recommended that there be an exchange of information on stereophonic transmission experiments in the MF band with the Working Group as well as on protection studies related to this type of emission.

2. *Necessary Bandwidth of Emission*

The Plan will be drawn for a necessary bandwidth of 10 kHz. However, the occupied bandwidth of an emission may be increased by agreement between an administration wishing to do so and another administration which considers that such increase could adversely affect its emissions which are in accordance with the Plan.

3. *Channel Separation:* 10 kHz

4. *Frequency Tolerance:* ± 10 Hz

5. *Protection Ratios*

5.1 *Cochannel Protection Ratio*

The Plan will be based on a cochannel protection ratio of 26 dB for both ground wave and skywave.

5.2 *Adjacent Channel Protection Ratio*

Protection ratio for the first adjacent channel: 0 dB

Protection ratio for the second adjacent channel: −29.5 dB

Some administrations believe that the Working Group should examine the following proposals:

Add the following condition to the protection ratio for the second adjacent channel: at plus or minus 20 kHz there shall be no assignments within the contour of 0.5 mV/m.

The Working Group recommends the study of the following topics:

a) Method of protection for the third adjacent channel.

b) Establishment of the first adjacent channel protection ratio for class A stations.

c) The effect of operating stations during pre-sunrise and post-sunset.

d) Contours that shall be protected outside the country for emissions in foreign territories.

e) Various interference evaluation methods.

f) Impact of the use of an exclusion rule other than 50%.

g) Field strength calculation methods in mixed paths and impact of the adoption of a method different than the one recommended in paragraph 6.2.

h) Impact of sea gain on the skywave signal.

5.3 *Protection Ratio for Stations belonging to a Synchronized Network*

The recommended value is 8 dB.

6. *Ground-Wave Propagation*

6.1 The FCC method and curves are recommended for calculating ground-wave field strength in the case of a uniform soil with homogeneous conductivity.

6.2 The Kirke or equivalent distance method is recommended for calculating ground-wave field strength for mixed paths and uniform soil with heterogeneous conductivity.

7. *Reflected-Wave Propagation*

The value of reflected-wave field strength shall be calculated using the FCC method and curves.

Note.—The Committee recommends that all the administrations of Region 2 do their best to obtain reliable ionospheric-wave propagation data so that the results obtained may be based on these data.

8. *Limitation of Maximum Power of a Station*

Although there was no consensus in the group for practical reasons, there must be some limit on the maximum effective radiated power of a station. In general, an indefinite increase in power becomes counterproductive and a source of harmful interference without resulting in a significant increase of the service area.

9. *Nominal Usable Field Strength*

The values recommended for this parameter, for planning purposes, will depend on the class of station as follows:

9.1 *Class A stations*

Daytime operation: 100 uV/m ground-wave contour.

Nighttime operation: 500 uV/m ground-wave contour or the reflected wave contour signal, 50% of the time, whichever is at the greatest distance.

The following recommendation emerged from the discussion of this item:

The nominal usable field strength values should be those adopted by the Working Group. However, in some cases, they are subject to negotiations between the concerned administrations.

9.2 Class B stations

Daytime Operation: 500 uV/m ground-wave contour.

Nighttime operation: 2500 uV/m ground-wave contour.

9.3 *Class C stations*

Daytime operation: 500 uV/m ground-wave contour.

Nighttime operation: 4000 uV/m ground-wave contour.

With regard to the earlier established contours, several administrations sustained that in the Radiobroadcasting inventory, indication should be given of those stations operating with values different from the ones established previously. The situation of the stations in border areas or of those already operating subject to subregional agreements should be specially studied.

The Working Group recommends that, with regard to these contours, and during the period between the 4th and 5th meetings, the administrations study in what cases the values of 10% and 50% for the presence of the interfering signal are to be used. It also requests the collaboration of the I.F.R.B. in these studies.

Appendix III—Draft Text of the Regional Broadcasting Agreement for Region 2

Factors To Be Considered in the Regional Plan—Regional Agreement Preamble

To facilitate relations, mutual understanding, and cooperation on broadcasting in the hectometric waveband;

To improve the utilization of frequencies assigned to the broadcasting service and achieve a satisfactory broadcasting service in all the countries;

Recognizing that all countries have equal rights, and that in the application of this Agreement the needs of each country shall be fulfilled as far as possible; and

Recognizing that the equitable and effective use of the hectometric waveband for broadcasting and the protection of mutually accepted services are major objectives for all countries, attempting thereby to bring about better coordination and the use of more efficient facilities.

The delegates of the member states of the International Telecommunications Union listed below, meeting in . . . . . at a Regional Administrative Radio Conference convened under the provisions of the International Telecommunication Convention (Malaga-Torremolinos, 1973) adopt, subject to approval by the competent authorities of their respective countries, the following provisions relating to the broadcasting service in Region 2 for the hectometric waveband.

Article I—Definitions

For the purposes of this Agreement the following terms shall have the meanings defined below:

Union: The International Telecommunication Union;

Secretary-General: The Secretary-General of the Union;

I.F.R.B.: The International Frequency Registration Board;

C.C.I.R.: The International Radio Consultative Committee;

Convention: The International Telecommunication Convention;

Radio Regulations: The Radio Regulations annexed to the Convention and references made in this Agreement shall be to the correponding portions of the regulations now in force;

Region 2: The geographic area defined in number 127 of the Radio Regulations, Geneva, 1959;

Agreement: The whole of this Agreement including its annexes;

Plan: The plan and its appendixes forming Annex 1 to this Agreement;

Contracting Member: Any Member of the Union which has approved or acceded to the agreement;

Administration: Any governmental department or service responsible for discharging the obligations undertaken in the Convention and the Radio Regulations.

Article 2—Frequencies

The provisions of this Agreement shall be applicable to the Frequencies in the (535 to 1605) kHz band allocated to the broadcasting service in accordance with Article 5 of the Radio Regulations.

Article 3—Execution of the Agreement

1. The Contracting Members shall adopt for their broadcasting stations operating in Region 2 in the frequency bands referred to in the agreement, the characteristics specified in the Plan.

2. The Contracting Members shall not bring assignments complying with the Plan into use, change the technical characteristics of station specified in the Plan, or bring new stations into use, except under the conditions set out in Articles 4 and 5 of this Agreement.

3. The Contracting Members undertake to study and put into practice, by common agreement, the measures necessary to avoid or to reduce any harmful or objectionable interference that might result from application of this Agreement.

Article 4—Procedure for Modifications to the Plan

1. When a Contracting Memeber proposes to make a modification to the Plan, i.e. either:

To change the characteristics of a frequency assignment to a broadcasting station shown in the Plan, whether or not the station has been brought into use, or

To bring into use an assignment to a broadcasting station not appearing in the Plan, or

To change the characteristics of a frequency assignment to a broadcasting station for which the procedure in this Article has been successfully applied, whether or not the station has been brought into use, or

To cancel a frequency assignment to a broadcasting station.

The following procedure shall be applied before any notification is made under the provisions of Article 9 of the Radio Regulation (see Article 5 of this Agreement).

2. In the remainder of the present Article the phrase "assignment in accordance with the Agreement" means any frequency assignment appearing in the Plan, or for which the procedure of this Article has been successfully applied.

3. Proposed Changes in the Characteristics of an Assignment of the Bringing into Use of a New Assignment.

3.1 Any administration that proposes to change the characteristics of an assignment, or put a new assignment into use, shall request the consent of any administration that has an assignment made under the Agreement in the same channel or in adjacent channels within (± 30 kHz) and that considers itself adversely affected (see 3.1.7 of this Agreement).

3.1.1 Any administration that proposes to change the characteristics of an assignment or put a new assignment into use shall report this to the I.F.R.B. informing it, in the format adopted in the Plan (and its appendices), of the characteristics of the modification or new assignment.

3.1.2 If the change proposed is within the limits defined in 3.1.10, an indication to this effect shall be given by the administration in the information sent to the I.F.R.B.

3.1.3 In all other cases, in order to seek the consent contemplated in point 3.1, it shall at the same time inform the I.F.R.B. of the names of the administrations with which if feels attempt must be made to reach an agreement, and the names of those whose consent has already been obtained.

3.1.4 The I.F.R.B. shall determine, by using the annex to the Agreement, those administration whose frequency assignment under the Agreement are

deemed affected in accordance with the provisions of 3.1.7. The I.F.R.B. shall immediately forward the results of its calculations to the administration proposing the modification to the Plan. The Board shall add the names of these administrations to the information received, and shall publish all the information in a special section of its weekly circular.

3.1.5 The I.F.R.B. shall send to the administrations listed in the special section of its weekly circular a telegram drawing their attention to the publication of this information and shall forward the result of its calculations to them.

3.1.6 Any administration that feels it is entitled to appear on the list of administrations whose frequency assignments have been considered to be adversely affected may request the I.F.R.B. to include it on that list within (45 days) from the date of publication, indicating the reasons therefore. A copy of the request will be sent to the administration that proposed to make changes.

3.1.7 Any assignment made according to the Plan may be regarded as adversely affected when appropriate calculations determine that objectionable interference occurs as a result of a proposed modification to the Plan. (The calculation determining the possibility of objectionable interference shall be based on Annex to this Agreement.)

3.1.8 Any administration may request from an administration that proposes a modification to the Plan any supplementary technical and/or operational information it considers necessary to determine whether there is objectionable interference. Similarly the administration that proposes a modification to Plan may ask any administration for such supplementary technical and/or operational information as it may consider necessary. The administrations shall report this to the I.F.R.B.

3.1.9 Comments from administrations on the information published in compliance with the provisions of 3.1.4 shall be sent either directly to the administration that is proposing the change or through the I.F.R.B., but the I.F.R.B.must be informed that comments have been made.

3.1.10 The agreement mentioned in 3.1 is not required if the proposed modification either:

Entails no increase in effective monopole radiated power in any direction or,

Relates to a change in the site of the station within the tolerances specified in Annex to the Agreement.

In either case, the administration intending to modify the Plan may put its project into effect, subject to the application of the provisions of Article 9 of the Radio Regulations.

3.1.11 It shall be considered that any administration that has not forwarded its comments to the administration that is proposing the modification or to the I.F.R.B. within a period of (90 days) following the date of the weekly circular referred to in 3.1.4, has agreed to the proposed change. However, an additional (60 days) may be extended to an administration that requests supplementary information in accordance with the provisions of 3.1.8, unless such information was already forwarded and the I.F.R.B. so informed.

3.1.12 If during the negotiations an administration must change its original proposal, it shall reapply the provisions of point 3.1.1 and the consquent procedure.

3.1.13 If no comments have been received on expiry of the periods specified in 3.1.11 or if an agreement has been reached with the administrations that submitted comments, the administration proposing the modification may carry it out and report such action to the I.F.R.B. indicating the final characteristics of the assignment and the names of the administration with which agreement has been reached.

3.1.14 When the proposed change to the Plan affects a developing country, the other administrations shall do everything possible to find a solution that makes it possible to expand that country's broadcasting system giving consideration to the basic principles of the Preamble to this Agreement.

3.1.15 The I.F.R.B. shall publish the information received under 3.1.13 in a special section of its weekly circular and indicate, where appropriate, the names of the administrations with which the provisions of this Article have been successfully applied. When agreement has been reached between Contracting Members involving a new assignment, the same legal status recognized for the assignments of the Plan shall apply to the assignment in question.

3.1.16 Should the administrations involved fail to reach agreement, the I.F.R.B. shall conduct such studies as those administrations may request; the I.F.R.B. shall inform the administrations of the findings of its studies and shall submit appropriate recommendations for resolution of the problem.

3.1.17 Any administration may, during application of the procedure for modification of the Plan or before initiating such procedure, request assistance from the I.F.R.B., especially in securing agreement of another administration.

3.1.18 If, after application of the procedure described in this Article, the administrations concerned are unable to reach an agreement, they may resort to the procedure established in Article 50 of the Convention. The administrations also may apply, by common agreement, the Optional Additional Protocol to the Convention.

3.1.19 In any case, the pertinent provisions of Article 9 of the Radio Regulations shall apply for notification of the assignment. Should no agreement be reached, once the assignment has been reported, the I.F.R.B. shall proceed to list it in the Master Register with a symbol to indicate that the assignment has been listed subject to the condition that it does not produce objectionable interference to frequency assignments made under the Agreement.

3.1.20 The Board shall keep an up-to-date master copy of the Plan, produced by application of the procedure specified in this Article; to that end, it shall prepare a document containing the frequency assignments in the Plan that have been changed in accordance with the present procedure, and the new assignments in accordance with the Agreement.

3.1.21 The I.F.R.B. shall inform the Secretary-General of any changes made in the Plan and shall publish an updated version of it in proper form when the circumstances justify such action and, in any case, every three years.

4. Cancellation of an assignment.

4.1 When an assignment made under the Agreement is cancelled definitely, whether because of change (for example, a change of frequency) or not, the administration concerned shall notify the I.F.R.B. immediately of the cancellation and the latter shall publish the news in a special section of its weekly cirucular.

In reporting cancellation of an existing assignment, sufficient information must be provided to identify the assignment being cancelled, in other words:

Frequency

Call sign

Location (city, state and geographical coordinates),

Effective radiated power

Actual or planned date of shutdown

4.2 Simultaneously with the notification of the cancellation of an assignment, the notifying administration may notify an assignment for a new

broadcasting station (on the same frequency) which is a substitute for the cancelled assignment and does not result in higher interference to assignments of other countries (on the same or adjacent frequencies) in excess of that previously caused by the broadcasting station whose assignment is cancelled.

Article 5—Notification of Frequency Assignments

1 Procedure

1.1 When an administration proposes to put an assignment into use in accordance with the Agreement, it shall notify it to the I.F.R.B. in accordance with the provisions of Article 9 of the Radio Regulations. Any such assignment shall be recorded in the Master Register as a result of application of the provisions of Article 9 of the Radio Regulations shall bear a special symbol under the Remarks column and a date under column 2.a or under column 2.b.

1.2 When relations between Contracting Members are involved, equal consideration shall be given to all frequency assignments put into use in accordance with the Agreement and recorded in the Master Register, regardless of the date that appears in column 2.a or column 2.b.

Article 6—Special Agreements

To supplement the procedures provided for under Article 4 of the Agreement and to facilitate application of the procedures to improve utilization of the Plan, Contracting Members may conclude special agreements in accordance with the pertinent provisions of the Convention and the Radio Regulations.

Article 7—Scope of the Agreement

1. This Agreement is binding upon the Contracting Members in their mutual relations, but not in their relations with noncontracting countries.

2. Should a member make reservations on application of a provision of the present Agreement, the other members shall not be obligated to respect that provision in their relations with the member that has formulated the reservations.

Article 8—Approval of the Agreement

Contracting Members shall notify the Secretary General of their approval of this Agreement (within 180 days of signing it); the Secretary General shall immediately inform the other members of the Union.

Article 9—Accession to the Agreement

1. Any Member of the Union in Region 2 that has not signed this Agreement may do so at any time. Accession shall be to the Plan as it stands at the time of accession, and no reservation may be formulated. The Secretary General shall be notified of the accession and shall inform immediately the other Members of the Union.

2. Accession to the Agreement shall become effective 30 days after the Secretary General has received the notification of accession.

Article 10—Denunciation of the Agreement

1. Any Contracting member may denounce the present Agreement at any time through a notification sent to the Secretary General, who shall inform the other Members of the Union.

2. Denunciation will become effective one year after the date on which the Secretary General received notification of denunciation.

Article 11—Amendment

Changes or additions may be made in the technical standards, if approved by at least two thirds of the administrations that signed this Agreement.

Article 12—Entry into Force of the Agreement

This Agreement shall enter into force on * * *

Article 13—Duration of the Agreement

The Agreement shall remain in effect until decided otherwise by an Administrative Radio Conference of Region 2.

Note—Refers to terms and paragraphs requiring further study.

[FR Doc. 79-20787 Filed 7-5-79; 8:45 am]
BILLING CODE 6712-01-M

FEDERAL MARITIME COMMISSION

[Docket No. 79-64]

Fiat-Allis France Materiels de Travaux Publics S.A. v. Atlantic Container Line; Filing of Complaint

Notice is given that a complaint filed by Fiat-Allis France Materiels de Travaux Publics S.A. against Atlantic Container Line was served June 28, 1979. Complainant alleges that respondent has assessed charges for transportation in excess of those specified in its tariffs on file with the Commission in violation of 46 U.S.C. 817(b)(3) (section 18(b)(3) of the Shipping Act, 1916).

Hearing in this matter, if any is held, shall commence on or before December 28, 1979. The hearing shall include oral testimony and cross-examination in the discretion of the presiding officer only upon a proper showing that there are genuine issues of material fact that cannot be resolved on the basis of sworn statements, affidavits, depositions, or other documents or that the nature of the matter in issue is such that an oral hearing and cross-examination are necessary for the development of an adequate record.

Francis C. Hurney,
Secretary.

[FR Doc. 79-20927 Filed 7-5-79; 8:45 am]
BILLING CODE 6730-01-M

GENERAL SERVICES ADMINISTRATION

Federal Property Management Regulations, Temporary Regulation E-65; Delegation of Authority

1. *Purpose.* This regulation delegates authority to the Secretary of Defense to represent the interests of the executive agencies of the Federal Government in an electric and gas rate proceeding.

2. *Effective date.* This regulation is effective immediately.

3. *Delegation.*

a. Pursuant to the authority vested in me by the Federal Property and Administrative Services Act of 1949, 63 Stat. 377, as amended, particularly sections 201(a)(4) and 205(d) (40 U.S.C. 481(a)(4) and 486(d)), authority is delegated to the Secretary of Defense to represent the consumer interests of the executive agencies of the Federal Government before the Illinois Commerce Commission involving the application of the Illinois Power Company for increases in its electric and gas rates.

b. The Secretary of Defense may redelegate this authority to any officer, official, or employee of the Department of Defense.

c. This authority shall be exercised in accordance with the policies, procedures, and controls prescribed by the General Services Administration, and shall be exercised in cooperation with the responsible officers, officials, and employees thereof.

Dated: June 27, 1979.

Paul E. Goulding,
Acting Administrator of General Services.

[FR Doc. 79-20753 Filed 7-5-79; 8:45 am]
BILLING CODE 6820-24-M

Federal Property Management Regulations, Temporary Regulation E-66; Delegation of Authority

1. *Purpose.* This regulation delegates authority to the Secretary of Defense to represent the interests of the executive agencies of the Federal Government in a rate increase proceeding.

2. *Effective date.* This regulation is effective immediately.

3. *Delegation.*

a. Pursuant to the authority vested in me by the Federal Property and Administrative Services Act of 1949, 63 Stat. 377, as amended, particularly sections 201(a)(4) and 205(d) (40 U.S.C. 481(a)(4) and 486(d)), authority is delegated to the Secretary of Defense to represent in conjunction with the Acting Administrator of General Services, the consumer interests of the executive agencies of the Federal Government before the New Mexico Public Service Commission involving the application of the Gas Company of New Mexico for a rate increase.

b. The Secretary of Defense may redelegate this authority to any officer, official, or employee of the Department of Defense.

c. This authority is concurrent with the authority of the Acting Administrator of General Services, and shall be exercised in accordance with the policies, procedures, and controls prescribed by the General Services Administration, in cooperation with the responsible officers, officials, and employees thereof.

Dated: June 27, 1979.

Paul E. Goulding,

Acting Administrator of General Services.

[FR Doc. 79-20754 Filed 7-5-79; 8:45 am]

BILLING CODE 6820-24-M

DEPARTMENT OF HEALTH, EDUCATION, AND WELFARE

Food and Drug Administration

Health Care Services; Open Meeting

AGENCY: Food and Drug Administration.

ACTION: Notice.

SUMMARY: This document announces a forthcoming consumer exchange meeting for hearing-impaired consumers to be chaired by George R. White, Director, Atlanta District.

DATE: The meeting will be held on Saturday, July 21, 1979, at 1 p.m.

ADDRESS: The meeting will be held at the Richard B. Russell Building, 75 Spring St. SW., Atlanta, GA 30303.

FOR FURTHER INFORMATION CONTACT: Ana M. Rivera, Consumer Affairs Officer, Food and Drug Administration, 880 W. Peachtree, St. NW., Atlanta, GA 30309, 404-880-7355.

SUPPLEMENTARY INFORMATION: The purpose of the meeting is to exchange information between hearing-impaired consumers and the regional and district staff offices relative to established procedures of the Food and Drug Administration (FDA) for eliciting consumer input into the agency's decisionmaking process, to identify common problems within the sphere of FDA responsiblility that have an effect on the consumer, to seek possible solutions to those problems, and to find ways in which FDA can provide consumer educational information to this group and conduct other activities of mutual interest and benefit.

Sign language will be used throughout the entire meeting. Parking will be available at the meeting building, accessible from Alabama St. at Spring St.

Dated: June 28, 1979.

William F. Randolph,

Acting Associate Commissioner for Regulatory Affairs.

[FR Doc. 79-20570 Filed 7-5-79; 8:45 am]

BILLING CODE 4110-03-M

[Docket No. 79N-0195]

Rynco Scientific Corp.; Premarket Approval of RX-56 (Porofocon A) Contact Lens

AGENCY: Food and Drug Administration.

ACTION: Notice.

SUMMARY: The Food and Drug Administration (FDA) announces approval of the application for premarket approval under the Medical Device Amendments of 1976 of the RX-56 (porofocon A) Contact Lens sponsored by Rynco Scientific Corp., Floral Park, NY. After reviewing the recommendation of the Ophthalmology Device Classification Panel, FDA notified the sponsor that the application was approved because the device had been shown to be safe and effective for use as recommended in the labeling submitted as part of the application.

DATE: Petitions for administrative review by August 6, 1979.

ADDRESS: Requests for copies of the summary of safety and effectiveness data and petitions for administrative review may be addressed to the Hearing Clerk (HFA-305), Food and Drug Administration, Rm. 4-65, 5600 Fishers Lane, Rockville, MD 20857.

FOR FURTHER INFORMATION CONTACT: Keith Lusted, Bureau of Medical Devices (HFK-402), Food and Drug Administration, Department of Health, Education, and Welfare, 8757 Georgia Ave., Silver Spring, MD 20910, 301-427-7550.

SUPPLEMENTARY INFORMATION: The sponsor, Rynco Scientific Corp., Floral Park, NY 11002, submitted to FDA an application for premarket approval of the RX-56 (porofocon A) Contact Lens on July 7, 1978. The application was reviewed by the Opthalmology Device Classification Panel, and FDA advisory committee, which recommended that the application be approved. On March 2, 1979, FDA approved the application by a letter to the sponsor from the Director of the Bureau of Medical Devices.

Before enactment of the Medical Device Amendments of 1976 (Pub. L. 94-295, 90 Stat. 539-583) (the amendments), soft contact lenses and solutions were regulated as new drugs. Because the amendments broadened the definition of the term "device" in section 201(h) of the Federal Food, Drug, and Cosmetic Act (21 U.S.C. 321(h)) (the act), soft contact lenses and solutions are now regulated as class III devices (premarket approval). As FDA explained in a notice published in the Federal Register of December 16, 1977 (42 FR 63472), the amendments contain transitional provisions to ensure continuation of premarket approval requirements for class III devices previously considered new drugs. FDA also requires as a condition to approval that sponsors of applications for premarket approval of soft contact lenses or solutions comply with the records and reports requirements of 21 CFR Part 310, Subpart D, until these provisions are replaced by similar requirements under the amendments.

A detailed summary of the information on which the agency's approval is based is available on request from the Hearing Clerk (address above). Requests should be identified with the name of the device and the Hearing Clerk docket number found in brackets in the heading of this document.

The labeling of the RX-56 (porofocon A) contact lens, like that of other approved soft contact lenses, states that the lens is to be used only with certain solutions for disinfection and other purposes. This restrictive labeling informs new lens users that they must avoid purchasing inappropriate products, e.g., solutions for use with hard contact lenses. However, this restrictive labeling needs to be updated

periodically to refer to new solutions that FDA approves for use with an approved lens. A sponsor who does not update the restrictive labeling may violate the misbranding provisions of section 502 of the act (21 U.S.C. 352) as well as the Federal Trade Commission Act (15 U.S.C. 41–58), as amended by the Magnuson-Moss Warranty-Federal Trade Commission Improvement Act (Pub. L. 93–637). Furthermore, failure to update the restrictive labeling to refer to new solutions that may be used with an approved lens may be grounds for withdrawing approval of the application for the lens, under section 515(e)(1)(f) of the act (21 U.S.C. 360e(e)(1)(f)). Accordingly, whenever FDA publishes a Federal Register notice of the agency's approval of a new solution for use with an approved lens, the sponsor of the lens shall correct its labeling to refer to the new solution, at the next printing or at such other time as FDA prescribes by letter to the sponsor.

Opportunity for Administrative Review

Section 515(f) of the Federal Food, Drug, and Cosmetic Act (21 U.S.C. 360e(f)) authorizes any interested person to petition for administrative review of the FDA decision to approve this application. A petitioner may request either a formal hearing under Part 12 (21 CFR Part 12) of the FDA administrative practices and procedures regulations or a review of the application and the agency's action by an independent advisory committee to experts. A petition for review must be in the form of a petition for reconsideration of FDA action under § 10.33(b) (21 CFR 10.33(b)). A petition must designate the form of review requested (hearing or independent advisory committee) and must be accompanied by supporting data and information showing that there is a genuine and substantial issue of material fact for resolution through administrative review. After reviewing any petition, FDA will decide whether to grant or deny the petition by a notice published in the Federal Register. If FDA grants the petition, the notice will state the issues to be reviewed, the form of review to be used, the persons who may participate in the review, the time and place of the review, and other details.

Petitioners may at any time, on or before August 6, 1979, file with the Hearing Clerk (HFA–305), Food and Drug Administration, Rm. 4–65, 5600 Fishers Lane, Rockville, MD 20857, four copies of each petition and supporting data and information, identified with the name of the device and the Hearing Clerk docket number found in brackets in the heading of this document. Received petitions may be seen in the above office from 9 a.m. to 4 p.m., Monday through Friday.

Dated: June 26, 1979.

William F. Randolph,

Acting Associate Commissioner for Regulatory Affairs.

[FR Doc. 79–20571 Filed 7–5–79; 8:45 am]

BILLING CODE 4110–03–M

[Docket No. 79P–0077]

Color Additive Status of Nitrites in Bacon; Availability of Letter Denying Petition

AGENCY: Food and Drug Administration.

ACTION: Notice.

SUMMARY: The Food and Drug Administration (FDA) announces the availability of a letter of denial issued in response to a citizen petition requesting that nitrites in bacon be declared color additives. The petitioners contended that nitrites impart color and thus may not be used unless regulated under the color additive provisions of the Federal Food, Drug, and Cosmetic Act (the act). FDA has concluded tentatively that nitrites impart color to bacon but qualify for the statutory exception from the "color additive" definition.

DATE: Letter of denial issued June 29, 1979.

ADDRESS: Copies of petition, comment, and letter of denial are available in the office of the Hearing Clerk (HFA–305), Food and Drug Administration, Rm. 4–65, 5600 Fishers Lane, Rockville, MD 20857,

FOR FURTHER INFORMATION CONTACT: L. Robert Lake, Bureau of Foods (HFF–302), Food and Drug Administration, Department of Health, Education, and Welfare, 200 C St. SW., Washington. DC 20204, 202–245–1254.

SUPPLEMENTARY INFORMATION: On March 12, 1979, three organizations (Public Citizen, Inc., Center for Science in the Public Interest, and Community Nutrition Institute) and two individuals (Claudia Silverman and Sidney Wolfe) jointly filed a petition with FDA pursuant to 21 CFE 10.30. The petition requested FDA to declare that nitrites used in bacon are a color additive, as defined in section 201(t)(1) of the act (21 U.S.C. 321(t)(1)), and that nitrites may not be used in the production of bacon unless bacon manufacturers have met the requirements of section 706 of the act (21 U.S.C. 376).

In the Federal Register of March 27, 1979 (44 FR 18288), FDA published a notice of availability of this petition and invited interested persons to submit written comments to the agency. Seventy-five comments (49 of them identical form letters) were received. Most asserted the need for continued use of nitrites in bacon and other meats. Five comments were generally in favor of the petition. Several comments, all of which were generally against the petition, responded to the question of whether nitrite imparts color to bacon.

After considering the petition and the comments received, FDA issued a letter denying the petition. The agency has concluded tentatively that nitrites in bacon impart color within the meaning of the definition of "color additive" in section 201(t)(1) of the act but qualify for the statutory exception to the definition for substances "* * * used (or intended to be used) solely for a purpose or purposes other than coloring." The letter of denial sets forth in full the reasons underlying these tentative conclusions. The agency will initiate rulemaking in the near future to implement its conclusions.

Copies of the petition, comments received, and FDA's letter of denial are on file in the office of the Hearing Clerk (HFA–305) (address above) and are available for public inspection and copying between 9 a.m. and 4 p.m., Monday through Friday.

Dated: June 29, 1979.

William F. Randolph,

Acting Associate Commissioner for Regulatory Affairs.

[FR Doc. 79–20760 Filed 7–12–79; 8:45 am]

BILLING CODE 4110–03–M

[Docket No. 76N–0002]

Diethylstilbestrol (DES) in Edible Tissues of Cattle and Sheep; Withdrawal of Approval of New Animal Drug Applications

AGENCY: Food and Drug Administration.

ACTION: Notice.

SUMMARY: The Food and Drug Administration (FDA) is withdrawing approval of new animal drug applications for the use of DES in cattle and sheep as an additive to animal feed and as a subcutaneous implant. Elsewhere in this issue of the Federal Register, FDA is also revoking the regulations that provide information about these new animal drug applications.

DATES: This action is effective with respect to the manufacture and shipment of DES animal drugs on July 13, 1979; it is effective with respect to the use of DES animal drugs and the manufacture, shipment, and use of feed

containing DES on July 20, 1979; it will not be made effective with respect to the edible products of animals treated with DES solely before the effective date for use of DES animal drugs and DES-treated animal feeds.

ADDRESS: Petitions for stay of the effective date may be filed with the Hearing Clerk (HFA-305), Food and Drug Administration, Rm. 4-56, 5600 Fishers Lane, Rockville, MD 20857.

FOR FURTHER INFORMATION CONTACT: Constantine Zervos, Scientific Liaison and Intelligence Staff (HFY-31), Food and Drug Administration, Department of Health, Education, and Welfare, 5600 Fishers Lane, Rockville, MD 20857, 301-443-4490.

SUPPLEMENTARY INFORMATION: FDA is withdrawing, after an evidentiary hearing, the approval if new animal drug applications (NADA's) 10421,10964, 11295, 11485, 12553, 15274, 31446, 34916, 44344, 45981, and 45982. These NADA's are for DES implants and liquid and dry feed premixes for use in cattle and sheep.

Withdrawal of approval of these NADA's follows, and is based upon the record of an evidentiary hearing held pursuant to 21 U.S.C. 360b(e)(1). Copies of the Commissioner of Food and Drugs' decision on the issues raised in the evidentiary hearing have been mailed to the participants in the hearing. Notice of the Commissioner's decision is given here pursuant to 21 CFR 12.130(e). A copy of the decision itself is on display in the office of the Hearing Clerk, Food and Drug Administration (address given above). That decision will be published, with nonsubstantive editorial changes, in the Federal Register at a later date.

21 CFR 522.640 and 588.225 provide information concerning the new animal drug applications whose approval has been withdrawn. Elsewhere in this issue of the Federal Register, FDA is revoking those regulations pursuant to 21 U.S.C. 360b(i).

Withdrawal of approval of the NADA's is effective with respect to the manufacture and shipment of DES animal drugs on July 13, 1979; withdrawal of approval is effective with respect to the use of DES animal drugs and the manufacture, shipment, and use of feed containing DES on July 20, 1979. This decision will not be effective with respect to edible products of animals treated with DES solely before the effective date for use of DES animal drugs and DES-treated animal feeds. After withdrawal becomes effective, the continued introduction, delivery for introduction, proffered delivery, or receipt in interstate commerce of DES animal drugs, feed treated with DES animal drugs, and food from animals treated with such drugs violates 21 U.S.C. 331(a), (c); see 21 U.S.C. 342(a)(2)(D), 351(a)(5), 360b(a)(1). In addition, the manufacture of DES animal drugs, or the treatment of feed or animals with such drugs, from components that have traveled in interstate commerce violates 21 U.S.C. 331(k).

Petitions for stay of the effective date of the withdrawal of approval of these drugs may be filed pursuant to 21 CFR 12.139; see 21 CFR 10.35. The filing of such petitions before the effective date applicable to use of DES animal drugs and the manufacture, shipment, and use of feed containing DES (the July 20, 1979 date) will automatically stay that date for 14 days. The filing of petitions for stay will not automatically stay the effective date applicable to the manufacture and shipment of DES animal drugs. The Commissioner's decision explains the information that must be submitted with any petition for stay of this action.

This notice is issued in accordance with 21 CFR 12.130(e).

Dated: June 29, 1979.

Donald Kennedy,

Commissioner of Food and Drugs.

[FR Doc. 79-20775 Filed 7-2-79; 11:45 am]

BILLING CODE 4110-03-M

[Docket No. 76N-0483]

Warner-Lambert/Parke-Davis & Co.; Benylin; Refusal To Approve Supplemental New Drug Application

AGENCY: Food and Drug Administration.

ACTION: Notice of availability of Commissioner's decision.

SUMMARY: The Commissioner of Food and Drugs has issued his final decision concerning a supplemental new drug application for Benylin (diphenhydramine hydrochloride), a drug which the sponsor, Warner-Lambert/Parke-Davis, claims is indicated for use in the treatment of cough due to colds or inhaled irritants. The Commissioner has determined that Benylin has not been shown to be effective for this use and is refusing to approve the application. In view of the decision on effectiveness, the Commissioner has not decided whether Benylin is safe for OTC distribution. The decision reverses the initial decision of the Administrative Law Judge, which found that Benylin is effective for its recommended use and is safe for OTC distribution.

EFFECTIVE DATE: June 29, 1979.

ADDRESS: The Commissioner's decision, including the final order, and all other documents related to the decision, may be seen in the Office of the Hearing Clerk (HFA-305), Food and Drug Administration, Rm. 4-65, 5600 Fishers Lane, Rockville, MD 20857, from 9 a.m. to 4 p.m., Monday through Friday.

FOR FURTHER INFORMATION: Tenny P. Neprud, Compliance Regulations Policy Staff (HFC-10), Food and Drug Administration, Department of Health, Education, and Welfare, 5600 Fishers Lane, Rockville, MD 20857, 301-443-3480.

SUPPLEMENTARY INFORMATION: This notice is issued in accordance with § 12.130(e) (21 CFR 12.130(e)). In the future, the agency will publish the Commissioner's decision in its entirety in the Federal Register.

Dated: June 29, 1979.

Donald Kennedy,

Commissioner of Food and Drugs.

[FR Doc. 79-20761 Filed 7-2-79; 11:45 am]

BILLING CODE 4110-03-M

National Institute of Education

Unsolicited Proposals To Conduct Educational Research and Development; Change in Closing Dates for Receipt of Proposals

This notice announces the decision of the National Institute of Education to change the closing dates for the receipt of unsolicited proposals. This change is designed to align the Institute's approval and funding cycle more closely with the two terms of the school year. The next closing date will be December 31, 1979 rather than the previously established date of October 31, 1979. The subsequent closing date will be June 30, 1980.

While the majority of NIE funds are awarded through competitions based upon requests for Proposals and specific program grants announcements, the Institute also wishes to assist in the development of other outstanding projects relevant to NIE's mission. Consequently, the Institute encourages eligible persons and groups to originate unique ideas for improving education and to submit their ideas as unsolicited proposals.

Approximately three to five percent of the Institute's budget has been set aside in the coming fiscal year to support unsolicited proposals. Proposals may be submitted at any time, but awards will usually be made twice a year in June

and December based upon competitive reviews of proposals.

The Institute is particularly interested in receiving proposals from minority group researchers, women researchers, and researchers from institutions which primarily serve minorities and women; teachers, school administrators, and others involved in education at the local level; and scholars from disciplines not normally involved in educational research.

A mailed proposal will be accepted for review if it is mailed on or before the closing date and the required proof of mailing is provided. Proof of mailing must consist of a legible U.S. Postal Service dated postmark or a legible mail receipt with the date of mailing stamped by the U.S. Postal Service. Private metered postmarks or mail receipts will not be accepted without a legible date stamped by the U.S. Postal Service.

Note.—The U.S. Postal Service does not uniformly provide a dated postmark. Proposal submitters should check with their local post office before relying on this method.

Submitters are encouraged to use registered or certified mail. Each late submitter will be notified that the proposal will not be considered in the current competition.

Additional information may be obtained from the Unsolicited Proposal Coordinator, Warren Kaufman, National Institute of Education, Room 682, 1200 19th Street, N.W., Washington, D.C. 20208, 202-254-7920.

Dated: July 2, 1979.

John W. Christensen,

Associate Director for Administration Management and Budget.

[FR Doc. 79-20852 Filed 7-5-79; 8:45 am]

BILLING CODE 4110-39-M

Office of Education

Emergency School Aid Act; Extension of Closing Date for Transmittal of Applications From State Educational Agencies for Fiscal Year 1979

The Commissioner of Education extends the July 9, 1979 closing date for the transmittal of applications from State educational agencies (SEAs) to August 9, 1979. The purpose of this extension is to allow sufficient time for applicants to develop applications. The extension applies to all applications invited by the notice with the July 9 closing date published in the Federal Register on May 30, 1979 (44 FR 31046). Applicants that have already filed applications under that notice will be permitted (but are not required) to review, revise, and resubmit their applications by the extended closing date.

Section 708(a) of the Emergency School Aid Act authorizes special programs and projects.

The Assistant Secretary has determined that awards to SEAs to provide technical assistance and training to school districts preparing or implementing voluntary desegragation plans will make substantial progress toward meeting the purposes of the Act.

Closing Date for Transmittal of Applications: Applications for awards must be mailed or hand delivered by August 9, 1979.

Applications Delivered by Mail: An application sent by mail must be addressed to the U.S. Office of Education, Application Control Center, Attention: 13.532L, Washington, D.C. 20202.

The Commissioner of Education prefers a legible U.S. Postal Service dated postmark or a legible mail receipt with the date of the mailing stamped by the U.S. Postal Service as proof of mailing.

Note.—The U.S. Postal Service does not uniformly provide a dated postmark. Applicants should check with their local post office before relying on this method.

Applicants are encouraged to use registered or at least first class mail.

Each late applicant will be notified that its application will not be considered in the current competition.

Applications Delivered by Hand: An application that is hand delivered must be taken to the U.S. Office of Education, Application Control Center, Room 5673, Regional Office Building 3, 7th and D Streets, SW., Washington, D.C.

The Application Control Center will accept hand-delivered applications between 8:00 a.m. and 4:00 p.m. (Washington, D.C., time) daily, except Saturdays, Sundays, and Federal holidays.

An application that is hand delivered will not be accepted after 4 p.m. on the closing date.

Available Funds: It is expected that $2,000,000 will be available to support projects submitted in response to this notice.

Application Forms: Application forms and program information packages are available and may be obtained by writing to the Special Projects Branch, Equal Educational Opportunity Programs, U.S. Office of Education, 400 Maryland Avenue, S.W., Washington, D.C. 20202.

An application must be prepared and submitted in accordance with the regulations, instructions, and forms included in the program information package.

Project Period: Grants made under this notice will be for projects beginning no earlier than September 1, 1979 and ending no later than September 30, 1980, but in no case for more than 12 months.

Applicable Regulations: The regulations applicable to this program are:

(a) The rule for this program published in the May 30 issue of the Federal Register (44 FR 31016);

(b) Regulations relating generally to programs under the Emergency School Aid Act (45 CFR Part 185); and

(c) The Office of Education general provisions regulations (45 CFR Parts 100, 100a and appendices), except to the extent that those regulations are inconsistent with 45 CFR Part 185 or the rule for this program.

Further Information: For further information contact Ms. Ethel F. Jackson, Program Analyst, Equal Educational Opportunity Programs, U.S. Office of Education, 400 Maryland Avenue, SW., Washington, D.C. 20202. Telephone: (202) 245-8230.

(20 U.S.C. 16-1-1619)

(Catalog of Federal Domestic Assistance No. 13.532L, Emergency School Aid Act—Special Projects)

Dated: June 28, 1979.

Ernest L. Boyer,

Commissioner of Education.

[FR Doc. 79-20784 Filed 7-5-79; 8:45 am]

BILLING CODE 4110-02-M

DEPARTMENT OF THE INTERIOR

Bureau of Land Management

Coal Lease Offering by Sealed Bid; C-27103, Gunnison County, Colo.

U.S. Department of the Interior, Bureau of Land Management, Colorado State Office, 700 Colorado State Bank Building, 1600 Broadway, Denver, Colorado 80202, hereby gives notice that certain coal resources in the land hereinafter described will be offered for lease by sealed bids of $25 per acre minimum to the qualified bidder of the highest cash amount per acre or fraction thereof in accordance with the provisions of the Mineral Leasing Act of 1920 (41 Stat. 437), as amended (30 U.S.C. 181 *et seq.*), and the Department of Energy Organization Act of August 4, 1977 (91 Stat. 565, 42 U.S.C. 7101). The sale will be held at 2:00 p.m. on August 7, 1979, in Room 708, Colorado State Bank Building, Denver, Colorado.

Coal Offered

The coal resource to be offered is to be mined underground from the "E"

seam in the following lands located approximately 12 miles northeast of Paonia, Colorado:

T. 13 S., R. 90 W., 6th P.M.
Sec. 1: Lots 13, 14, 19, 20;
Sec. 12: Lots 1, 2, and those parts of Lot 5, SW¼NE¼, and the SE¼NW¼ lying north of the North Fork of the Gunnison River.

Containing 289.74 acres.

There are approximately 900,000 tons of recoverable coal greater than four feet thick in the "E" seam, which is the uppermost coal seam. It is expected to average about 13,200 Btu per pound, 3.75% ash and .59% sulfur.

Rental and Royalty: A lease issued as a result of this offering will provide for payment of an annual rental of $3.00 per acre or fraction thereof and a royalty payable to the United States at the rate of 8 percent of the value of coal mined by underground methods. The value of the coal shall be determined in accordance with 30 CFR 211.63.

Public Comments: The public is invited to submit written comments concering fair market value of the offered coal reserves to the Bureau of Land Management and the U.S. Geological Survey. Public comments will be reviewed and taken into consideration in the determination of fair market value for the offered lands. Comments should address specific factors related to fair market value including: the quantity and quality of the coal resource, the estimated market value of the coal, the estimated cost of producing the coal, the expected rate of industry return, the appropriate discount rate for use in calculating present value along with probable timing and rate of production, the value of the surface estate, and the mining method or methods which would achieve maximum econimic recovery of the coal. Documentation of similar market transactions, including location, terms, and conditions may also be submitted at this time.

Those comments will be considered in the final determination of fair market value as determined in accordance with 30 CFR 211.63 and 43 CFR 3525.8(b). Should any information submitted as comments be considered to be proprietary by the commentor, the information should be labeled as such and stated in the first page of the submission. Comments should be sent to the State Director, Bureau of Land Management, Room 700, Colorado State Bank Bldg., 1600 Broadway, Denver, CO 80202, and to the Regional Conservation Manager, U.S. Geological Survey, Box 25046, Denver Federal Center, Denver, CO 80225, to arrive no later than August 1, 1979.

Qualified Bidder: In addition to the qualification requirements in 43 CFR 3502, the bidder will have to show it meets either of the following criteria:

(1) The proposed lease is required to maintain an existing mining operation (a) at the average annual level of production existing as of September 27, 1977, or (b) to provide reserves necessary to meet binding contracts (excluding letters of intent and memoranda of understanding) existing on September 27, 1977, and the extent of the proposed lease is not greater than is required to meet criterion (a) or (b) for eight years in the future. Any lease issued under this paragraph will provide that annual production from the lease area shall not be greater than average annual level of production existing as of September 27, 1977, or the amonut needed to meet the annual requirements of the contract existing on September 27, 1977; or

(2) The proposed lease is necessary because mining operations existing on September 27, 1977, are being conducted that could remove the coal deposit as part of an orderly mining sequence; and the size, location, or physical characteristics are such that removal of the coal reserves sought to be leased, except in conjunction with ongoing operations, would (a) involve costs demonstrably so high that it would not be sufficiently profitable to develop the deposit in the reasonably foreseeable future or (b) significantly increase environmental damage. The extent of the proposed lease cannot be greater than necessary to provide coal for five years in the future at the average annual level of production existing as of September 27, 1977.

If the bidder is other than the applicant, the documents purporting to meet the criteria must be enclosed with the sealed bid.

Warning to Bidders: No bids received after 2:00 P.M., August 7, 1979, will be considered. In the event of tying bids, the tying bidders will be allowed to submit additional oral bids to break the tie. Sealed bids may not be modified or withdrawn unless such modification or withdrawal is received before 2:00 P.M., August 7, 1979, at Room 700, Colorado State Bank Building, Denver, Colorado. The Department of the Interior reserves the right to reject any and all bids and also the right to offer the lease to the next highest qualified bidder if the successful bidder fails to obtain the lease for any reason. If any bid is rejected, the deposit made on the day of the sale will be returned. The successful bidder is obligated to pay for the newspaper publications of this notice.

Notice of Availability: Bidding instructions are included in the Detailed Statement of the Terms and Conditions of Lease Offer and Lease. A copy of the Statement and the Proposed Coal Lease are available at the Bureau of Land Management, Room 700, Colorado State Bank Building, 1600 Broadway, Denver, Colorado 80202. All case file documents and written comments submitted by the public on Fair Market Value or royalty rates except those portions identified as proprietary by the commentator and meeting exemptions stated in the Freedom of Information Act, are available for public inspection in Room 701.

Alan D. Campbell,

Acting Leader, Montrose Team, Branch of Adjudication.

[FR Doc. 79-20003 Filed 7-6-79; 8:45 am]

BILLING CODE 4310-84-M

[I-14415]

Idaho; Offer of Lands

June 26, 1979.

1. Pursuant to the provisions of the Act of May 31, 1962 (76 Stat. 89), the following lands, found upon survey to be omitted lands of the United States, will be offered for sale:

Boise Meridian, Idaho

T. 7 N., R. 41 E.,
Sec. 6, lot 13, lot 14, lot 15, (portion lying west of a line extending south from the special meander corner (SMC) on the north boundary of lot 15 to the south boundary of lot 15 (intersection with restored original meander line for the left bank).

The area described aggregates approximately 35.61 acres.

2. The plat of survey was filed in the Land Office records in Boise at 10:00 a.m. on September 10, 1970.

3. Persons claiming a preference right in accordance with the provisions of the Act, must file with the Idaho State Office, Federal Building, 550 West Fort Street, Box 042, Boise, Idaho 83724, before September 10, 1979, a notice of their intention to apply to purchase all or part of the lands as qualified preference right claimants.

4. The Act grants a preference right to purchase the above lands to any citizens of the United States (including corporations, partnerships, firm, or other legal entity having authority to hold title to lands in the State of Idaho) who, in good faith, under color of title or claiming as a riparian owner has, prior to March 30, 1961, placed valuable

improvements upon, reduced to cultivation, or occupied any of the lands so offered for sale, or whose ancestors or predecessors in interest have taken such action.

5. The lands are determined to be suitable for sale and will be sold at their fair market value subject to:

(a) Qualified preference right claims.

(b) A reservation to the United States of all the coal, oil, gas, shale, phosphate, potash, sodium, native asphalt, solid and semisolid bitumen and bituminous rock, including oil-impregnated rock or sands from which oil is recoverable only by special treatment after the deposit is mined or quarried, together with the right to prospect for, mine, and remove the same.

(c) A reservation to the United States of a 110-food strip of land along and parallel to the banks of the Snake River for use of the public for access and recreation.

Lorin J. Welker,

Chief, Divison of Technical Services.

[FR Doc. 79-20755 Filed 7-5-79; 8:45 am]

BILLING CODE 4310-84-M

[NM 37463]

New Mexico; Application

June 29, 1979.

Notice is hereby given that, pursuant to Section 28 of the Mineral Leasing Act of 1920 (30 U.S.C. 185), as amended by the Act of November 16, 1973 (87 Stat. 576), Southern Union Gathering Company has applied for one 2-inch natural gas pipeline right-of-way across the following land:

New Mexico Principal Meridian, New Nexico

T. 30 N., R. 12 W.,
Sec. 6, lot 5 and SE¼NW¼.

This pipeline will convey natural gas across .09 of a mile of public land in San Juan County, New Mexico.

The purpose of this notice is to inform the public that the Bureau will be proceeding with consideration of whether the application should be approved, and if so, under what terms and conditions.

Interested persons desiring to express their views should promptly send their name and address to the District Manager, Bureau of Land Management, P.O. Box 6770, Albuquerque, New Mexico 87107.

Fred E. Padilla,

Chief, Branch of Lands and Minerals Operations.

[FR Doc. 79-20359 Filed 7-5-79; 8:45 am]

BILLING CODE 4310-84-M

[NM 37071, 37179, 37462, 37471, and 37473]

New Mexico; Applications

June 26, 1979.

Notice is hereby given that, pursuant to Section 28 of the Mineral Leasing Act of 1920 (30 USC 185), as amended by the Act of November 16, 1973 (87 Stat. 576), El Paso Natural Gas Company has applied for four 4½-inch and one 6⅝ inch natural gas pipeline rights-of-way across the following lands:

New Mexico Principal Meridian, New Mexico

T. 29 N., R. 7 W.,
Sec. 20, NE¼SE¼;
Sec. 21, NW¼SW¼.
T. 30 N., R. 7 W.,
Sec. 26, NW¼NW¼;
Sec. 27, E½NE¼ and SW¼NE¼.
T. 28 N., R. 9 W.,
Sec. 23, E½NE¼ and SW¼NE¼.
T. 31 N., R. 10 W.,
Sec. 10, lots 1, 7 and 8;
Sec. 11, lots 12, 13 and 14;
Sec. 14, lots 3, 5 and 6.
T. 30 N., R. 13 W.,
Sec. 10, E½SW¼ and SW¼SW¼.

These pipelines will convey natural gas across 2.613 miles of public lands in Rio Arriba and San Juan Counties, New Mexico.

The purpose of this notice is to inform the public that the Bureau will be proceeding with consideration of whether the applications should approved, and if so, under what terms and conditions.

Interested persons desiring to express their views should promptly send their name and address to the District Manager, Bureau of Land Management, P. O. Box 6770, Albuquerque, New Mexico 87107.

Fred E. Padilla,

Chief, Branch of Lands and Minerals Operations.

[FR Doc. 79-20860 Filed 7-5-79; 8:45 am]

BILLING CODE 4310-84-M

[NM 37072]

New Mexico; Application

June 28, 1979.

Notice is hereby given that, pursuant to Section 28 of the Mineral Leasing Act of 1920 (30 U.S.C. 185), as amended by the Act of November 16, 1973 (87 Stat. 576), El Paso Natural Gas Company has applied for one 4½-inch natural gas pipeline right-of-way across the following land:

New Mexico Principal Meridian, New Mexico

T. 17 S., R. 27 E.,
Sec. 31, SW¼NE¼ and NW¼SE¼.

This pipeline will convey natural gas across 0.271 of a mile of public land in Eddy County, New Mexico.

The purpose of this notice is to inform the public that the Bureau will be proceeding with consideration of whether the application should be approved, and if so, under what terms and conditions.

Interested persons desiring to express their views should promptly send their name and address to the District Manager, Bureau of Land Management, P.O. Box 1397, Roswell, New Mexico 88201.

Fred E. Padilla,

Chief, Branch of Lands and Minerals Operations.

[FR Doc. 79-20861 Filed 7-5-79; 8:45 am]

BILLING CODE 4310-84-M

New Mexico Wilderness Inventory

July 9, 1979.

AGENCY: Bureau of Land Management, Interior.

ACTION: Decision and notice.

SUMMARY: The New Mexico State Director of the Bureau of Land Management announces his final decision on public lands dropped from further wilderness consideration. This decision was reached after a systematic initial inventory, with heavy public involvement, of all public lands administered by the Bureau of Land Management in New Mexico. This inventory is directed by the Federal Land Policy and Management Act of 1976 and is being conducted using procedures identified in the Bureau of Land Management's Wilderness Inventory Handbook published September 27, 1978. Copies of this handbook are available from any office of the Bureau of Land Management.

This decision and announcement is based upon recommendations presented for public review and comment on March 12, 1979. Presentations of these recommendations was followed by a 90-day public comment period. During this public comment period, a series of 13 open houses and 12 public meetings were held throughout the state to explain the State Director's recommendations and accept public comment. All public inputs, written and oral, were accepted until July 9, 1979.

By the end of the comment period, the BLM received 1200 public inputs including letters, oral testimony, reports, phone calls, etc. Eight hundred sixty seven imputs pertained directly to the initial wilderness inventory recommendations. The majority of public imputs commented on the presence or absence of wilderness characteristics in specific units. The BLM received volumes of maps, reports, photos and other information which will be checked for those units requiring intensive wilderness inventory. Many people asked the BLM to reconsider several units for intensive wilderness inventory, explaining their lack of wilderness characteristics was *not* obvious. Many other people objected to wilderness designation or inventory for units the BLM recommended for intensive inventory. The principal reasons were these areas obviously lacked wilderness characteristics or that they felt wilderness would conflict with grazing and minerals production. Consideration of resource conflicts is not considered during inventory. However, these comments were displayed and saved for use in the "study" phase of the wilderness review program where all resource uses of the land are considered before making land use decisions.

Public imputs received were analyzed using a Content Analysis System. Results of this analysis are displayed in the Initial Wilderness Inventory Analysis Report and are summarized for specific units in the State Director's detailed initial wilderness inventory written decision.

Information clarifying the State Director's decision and announcement is available upon request in map and written form. These documents and the Initial Wilderness Inventory Analysis Report are available from the Bureau of Land Management's New Mexico State Office. These materials detail the following information:

Decision

Approximately 10,598,390 acres of the public lands in New Mexico are dropped from further wilderness consideration. This includes 236 wilderness inventory units and numerous small dispersed tracts of public land.

Lands dropped from further wilderness consideration may be grouped into the following categories:

Lands and Units Dropped With Unanimous Public Agreement

This group includes dispersed tracts of public lands, and 207 wilderness inventory units, comprising approximately 10,083,987 acres. The BLM previously recommended these lands be dropped from further wilderness consideration. Upon completion of the public comment period described above, there was unanimous agreement that these lands should be dropped. Lands in this group are released from further wilderness consideration and the limitations imposed by Section 603 of the Federal Land Policy and Management Act no longer apply upon publication of this notice.

Lands and Units Previously Recommended for Intensive Inventory Which Are Now Dropped

This group includes 2 units and 31,010 acres. These lands were previously recommended for intensive inventory, but are now dropped from further wilderness consideration.

These lands were dropped because the BLM received and confirmed information during the public comment period which showed these lands to be obviously lacking widerness characteristics.

This portion of the State Director's decision will become effective August 10, 1979. Limitations imposed by Section 603 of the Federal Land Policy and Management Act will no longer apply after this decision becomes effective.

Inventory Units Dropped Which Received Some Support for Intensive Inventory.

This group includes 27 units and 483,393 acres. The BLM previously recommended these units to be dropped from further wilderness consideration because they obviously lacked wilderness characteristics. Some public objection was received to this recommendation. However, the State Director judged these comments to be invalid or not sufficient to raise a question as to the units wilderness characteristics.

This portion of the State Director's decision will become effective August 10, 1979. Limitations imposed by Section 603 of the Federal Land Policy and Management Act will no longer apply after this decision becomes effective.

Approximately 2,241,769 acres and 104 inventory units of the public lands in New Mexico will be intensively inventoried for wilderness characteristics. Inventory of these lands is in progress and the public is encouraged to participate. Management limitations imposed by Section 603 of the Federal Land Policy and Management Act will continue to apply to these lands until they are officially dropped from further wilderness consideration.

ADDRESS: Send requests to: State Director (930), Bureau of Land Management, United States Post Office and Federal Building, South Federal Place, P.O. Box 1449, Santa Fe, New Mexico 87501.

FOR FURTHER INFORMATION CONTACT: Dan Wood at the above Santa Fe, New Mexico address or call 505-988-6227.

Arthur W. Zimmerman,

State Director.

[FR Doc. 79-20756 Filed 7-5-79; 8:45 am]
BILLING CODE 4310-84-M

Utah; Review and Updating of Planning Documents

AGENCY: Bureau of Land Management (BLM), U.S. Department of the Interior.

ACTION: Supplementing Updated Planning Documents.

SUMMARY: This notice is to advise you that the Moab District Office, Bureau of Land Management is proceeding to supplement portions of the San Rafael and Wattis management framework plans to reflect the Secretary of the Interior's approved coal unsuitability criteria. These plans were recently updated to include the interim criteria as proposed in the Federal Coal Management Environmental Impact Statement (April 1979). The supplemental materials will be available after August 15, 1979, from the State Director, Bureau of Land Management. Drafts of the materials are presently available for public inspection at the BLM offices in Price, Moab, and Salt Lake City.

Background information, including approved criteria, will be published in the Federal Register as soon as they are finalized.

Paul L. Howard,

State Director.

[FR Doc. 79-20757 Filed 7-5-79; 8:45 am]
BILLING CODE 4310-84-M

[W-68295]

Wyoming; Application

June 26, 1979.

Notice is hereby given that pursuant to Sec. 28 of the Mineral Leasing Act of 1920, as amended (30 U.S.C. 185), the Northwest Pipeline Corporation of Salt Lake City, Utah filed an application for a right-of-way to construct 4½", 6⅝" and 8⅝" O.D. pipelines for the purpose of transporting natural gas across the following described public lands:

Sixth Principal Meridian, Wyoming

T. 18 N., R. 112 W.,
Sec. 10, E½W½, NW¼NW¼, NW¼SW¼.
T. 20 N., R. 112 W.,
Sec. 6, NE¼SW¼, N½SE¼;
Sec. 8, W½NE¼, SE¼NE¼, E½SE¼;
Sec. 16, N½NW¼, SE¼NW¼, NE¼SW¼, W½SE¼.
T. 21 N., R. 112 W.,
Sec. 8, N½NE¼, E½NW¼, NE¼SW¼.
T. 20 N., R. 113 W.,
Sec. 10, SE¼SE¼.
Sec. 14, SW¼NW¼, N½SW¼, SE¼SW¼.
Sec. 24, SW¼SW¼.

The proposed pipeline will transport natural gas from the Champlin 358 F #1 Well, Lansdale Federal 10-1 Well, Seven Mile Gulch #8 Well and the Whiskey Buttes Well Numbers 27, 30 and 36 to points of connection with Northwest Pipeline Corporation's gathering system all within T. 18 N., R. 112 W., Uinta County, and Tps. 20 and 21 N., R. 112 W., and T. 20 N., R. 113 W., Lincoln County, Wyoming.

The purpose of this notice is to inform the public that the Bureau will be proceeding with consideration of whether the application should be approved and, if so, under what terms and conditions.

Interested persons desiring to express their views should do so promptly. Persons submitting comments should include their name and address and send them to the District Manager, Bureau of Land Management, P.O. Box 1869, Highway 187 N., Rock Springs, Wyoming 82901.

Harold G. Stinchcomb,

Chief, Branch of Lands and Minerals Operations.

[FR Doc. 79-20884 Filed 7-5-79; 8:45 am]

BILLING CODE 4310-84-M

[Wyoming 045038]

Wyoming; Application; Amendment

June 25, 1979.

Notice is hereby given that pursuant to Section 28 of the Mineral Leasing Act of 1920, as amended (30 U.S.C. 185), the Northwest Pipeline Corporation of Salt Lake City, Utah filed an application to amend their existing right-of-way to construct an additional 6⅝ inch O.D. buried pipeline to be located entirely within the existing 50 foot right-of-way for the purpose of transporting natural gas across the following described public lands:

Sixth Principal Meridian, Wyoming

T. 28 N., R. 113 W.,
Sec. 18, lots 16 and 17;
Sec. 19, lots 6, 7 and 8.
T. 28 N., R. 114 W.,
Sec. 13, SE¼NW¼ and SW¼SE¼.

The proposed additional pipeline designated as Northwest Pipeline Corporation's Lateral T-1 project will parallel the existing pipeline and will extend from a point located in the SW¼NW¼ of section 13, T. 28 N., R. 114 W., to a point of connection with a proposed 8⅝ inch O.D. pipeline at a point located in Tract 39, Section 17, T. 28 N., R. 113 W., all within Sublette County, Wyoming.

The purpose of this notice is to inform the public that the Bureau will be proceeding with consideration of whether the application should be approved and, if so, under what terms and conditions.

Interested persons desiring to express their views should do so promptly. Persons submitting comments should include their name and address and send them to the District Manager, Bureau of Land Management, P.O. Box 1869, Highway 187 N., Rock Springs, Wyoming 82901.

Harold G. Stinchcomb,

Chief, Branch of Lands and Minerals Operations.

[FR Doc. 79-20882 Filed 7-5-79; 8:45 am]

BILLING CODE 4310-84-M

[W-036192]

Wyoming; Application; Amendment

June 25, 1979.

Notice is hereby given that pursuant to Sec. 28 of the Mineral Leasing Act of 1920, as amended (30 U.S.C. 185), the Northwest Pipeline Corporation of Salt Lake City, Utah, filed an application to amend their existing right-of-way to construct an additional 8⅝ inch O.D. buried pipeline to be located entirely within the existing 50 foot right-of-way for the purpose of transporting natural gas across the following described public lands:

Sixth Principal Meridian, Wyo.

T. 28 N., R. 113 W.,
Sec. 20, lots 2, 3 and 5.

The proposed additional pipeline designated as Trunk T will extend from a point of connection with Northwest Pipeline Corporation's proposed Lateral T-1 at a point located in Tract 39, Section 17, and will transport natural gas to a compressor station located in Tract 41, Section 20, all within T. 28 N., R. 113 W., Sublette County, Wyoming.

The purpose of this notice is to inform the public that the Bureau will be proceeding with consideration of whether the application should be approved and, if so, under what terms and conditions.

Interested persons desiring to express their views should do so promptly. Persons submitting comments should include their name and address and send them to the District Manager, Bureau of Land Management, P.O. Box 1869, Highway 187 N., Rock Springs, Wyoming 82901.

Harold G. Stinchcomb,

Chief, Branch of Lands and Minerals Operations.

[FR Doc. 79-20883 Filed 7-5-79; 8:45 am]

BILLING CODE 4310-84-M

Bureau of Reclamation

Contract Negotiations With the Goshen Hole Farm; Availability of the Proposed Contract for Public Review and Comment

The Department of the Interior, through the Bureau of Reclamation, is in the final stages of negotiating a contract with Goshen Hole Farm located near Junction City, Oregon. The purpose of the proposed contract is to provide and agricultural water supply to Goshen Hole Farm. The proposed contract is written pursuant to the Reclamation Project Act of 1939 (53 Stat. 1187) and the Flood Control Act of 1944 (58 Stat. 887).

Goshen Hole Farm requires a water supply to serve approximately 139 irrigable acres. Water service will be made available from the Willamette Basin Project constructed and operated by the Corps of Engineers. Section 8 of the Flood Control Act of 1944 authorizes the Secretary of the Interior to market water from Corps of Engineers' reservoirs for agricultural use.

The proposed contract will make available a maximum annual water supply of 299 acre-feet. The initial water rate will be $1.00 per acre-foot which is adjustable every 5 years. The term of the proposed contract is 40 years. Goshen Hole Farm must furnish its own facilities to divert and distribute the water and must obtain a diversion permit from the State of Oregon.

For further information, please contact Mr. Martin Fabricius, Agricultural Economist, Division of Water, Power, and Lands, attention code 440, 550 West Fort Street— Box 043, Boise, Idaho, telephone No. (208) 384-1162.

Copies of the proposed contract form are available at the Bureau of Reclamation offices in Boise, Idaho, and in Salem, Oregon. A period of 30 days from the date of this publication will be allowed for receipt of written comments

from the public. Comments should be addressed to Regional Director, attention 440, Bureau of Reclamation, at the address shown above. All written correspondence concerning the proposed contract is available to the general public pursuant to the terms and procedures of the Freedom of Information Act (80 Stat. 383), as amended.

Dated: June 27, 1979.

R. Keith Higtinson,

Commission of Reclamation.

[FR Doc. 79-20435 Filed 7-5-79; 8:45 am]

BILLING CODE 4310-09-M

Contract Negotiations With Truckee-Carson Irrigation District, Cities of Reno and Sparks, Nevada, and United States Fish and Wildlife Service, Washoe Project, California-Nevada; Intent to Negotiate an Interim Water Storage Contract

The Department of the Interior, through the Bureau of Reclamation, intends to negotiate with Truckee-Carson Irrigation District (TCID), Nevada; cities of Reno and Sparks, Nevada; and United States Fish and Wildlife Service (USFWS) for an interim contract to store water in Stampede Reservoir. The contract will be negotiated pursuant to the National Environmental Policy Act (83 Stat. 852), Endangered Species Act (87 Stat. 884), the Reclamation Act (32 Stat. 388), the Warren Act (36 Stat. 925), and the Washoe Project Act (70 Stat. 775).

According to the Environmental Protection Agency (EPA), the Reno-Sparks Joint Water Pollution Control Plant (JWPCP) is experiencing severe difficulty in achieving consistent compliance with the National Pollutant Discharge Elimination System (NPDES) permit discharge requirements. The Early Start Project is an interim measure to expand and upgrade the Reno-Sparks JWPCP until the "Master Project" is constructed which will bring the Reno-Sparks JWPCP until the "Master Project" is constructed which will bring the Reno-Sparks JWPCP into full compliance with final effluent limitations contained in the NPDES permit. To be eligible for grant assistance for construction of the Early Start Project, the cities of Reno and Sparks must satisfy condition 10d of the Special Conditions to the Early Start Project, Step 3 Grants. Condition 10d requires sufficient water to be available to the cities for dilution of sewage effluent to maintain the current quality of the Truckee River during the Early Start Project. The cities estimate they will need at least 10,000 acre-feet annually for flow augmentation. TCID has offered to store 10,000 acre-feet of its water in Stampede Reservoir so that it could be used for flow augmentation purposes when needed by the cities.

The Bureau of Reclamation proposes to execute an interim water storage contract with TCID, the cities of Reno and Sparks, and the USFWS to store TCID's water in Stampede Reservoir to be used for dilution purposes by the cities of Reno and Sparks. The water would reenter the Truckee River to be used by TCID for irrigation purposes. TCID will be granted storage space in Stampede Reservoir only when excess storage space is available. When storage space is not available, TCID's water will be released. Payment to the United States for use of storage space in Stampede Reservoir will be determined by taking into consideration the cost of construction and operation and maintenance of Stampede Reservoir. The parties to be responsible for computing the quantity of water required for dilution purposes and also for notifying the Bureau of Reclamation as to the quantity and timing of releases of the stored water will be determined at a later date.

All meetings scheduled by the Bureau of Reclamation with TCID and the other proposed contractors for the purpose of discussing terms and conditions of the proposed amendatory contract shall be open to the general public as observers. Advance notice of meetings shall be furnished only to those parties having previously furnished a written request for such notice to the office identified below at least one week prior to any meetings. All written correspondence concerning the proposed contract shall be made available to the general public pursuant to the terms and procedures of the Freedom of Information Act (80 Stat. 383), as amended.

The public is invited to submit written comments on the form of the proposed contract not later than 15 days after the completed contract draft is declared to be available to the public. The Commissioner of Reclamation will review comments submitted and based on the number, source, and nature of the comments, will decide whether to hold a public hearing.

For further information on scheduled negotiating sessions and the proposed contract, please contact Mrs. Betty Riley, Repayment Specialist, Division of Water and Power Resources Management, Bureau of Reclamation, 2800 Cottage Way, Sacramento, California 95825, telephone No. (916) 484-4620.

Dated: June 28, 1979.

R. Keith Higginson,

Commissioner of Reclamation.

[FR Doc. 79-20513 Filed 7-5-79; 8:45 am]

BILLING CODE 4310-09-M

Geological Survey

[Int FES 79-27]

Availability of Final Statement on Development of Coal Resources, Central Utah

Pursuant to section 102(2)(C) of the National Environmental Policy Act of 1969, the Department of the Interior has prepared a final regional environmental impact statement on proposed coal development and associated activities in central Utah. The statement concerns a broad area of central Utah and includes the Book Cliffs, Wasatch Plateau, Salina Canyon, the western part of the Sego coal field, the Emery coal fields in east-central Utah, and the communities associated with these fields. The environmental statement is developed in two parts: an analysis of the cumulative impacts that would result from projected coal development in the region, and analyses of impacts that would result from specific mining and reclamation plans.

The major analysis in the cumulative statement is based on a projected regional coal production of 24 million tons per year (mty) by the year 1990. This includes full production from 10 proposed mines and would supply the peak demand requirements of the proposed Intermountain Power Project. Alternative production scenarios of 19 mty and 42 mty by 1990 are presented to provide a basis for evaluating areas of environmental concern or impact sensitivity at lower and higher production levels. Seven applicants have submitted mining and reclamation plans for 10 proposed mines on existing leases in central Utah. The mines and applicants are the Deadman Canyon mine of AMCA Coal Leasing, Inc.; Skumpah Canyon mine of the Energy Reserves Group, Inc.; Mountain States No. 1 mine of the Mountain States Resources Co.; Fish Creek and Dugout Canyon mines of the Pacific Gas and Electric Co.; McKinnon No. 1 and No. 2 mines of Routt County Development, Ltd.; B Canyon mine of the United State Steel Corp.; Belina No. 2 and O'Connor mines of Valley Camp of Utah, Inc.

The mining and reclamation plans included in this statement were submitted for review prior to the revision of the 30 CFR Part 211 regulations (43 FR 37181 *et seq.*, August

22, 1978) which incorporated the initial regulatory program under the Surface Mining Control and Reclamation Act of 1977 (SMCRA). These plans were also submitted prior to the April 12, 1979, effective date of the permanent regulatory program on Federal lands under SMCRA. 30 CFR Subchapter D, 44 FR 15332, March 13, 1979. Thus, the mine plans have not been reviewed for compliance with the applicable requirements of SMCRA and implementing regulations. Prior to making any decision on approval of the mining and reclamation plans, the Office of Surface Mining Reclamation and Enforcement (OSM) will perform a technical review for compliance with SMCRA and the applicable regulations. Once the mine plans conform to the applicable requirements of those authorities, OSM will evaluate whether this final environmental impact statement is adequate for mine plan approval actions or whether a supplement or other environmental documents need to be prepared and distributed.

Comments received on the draft environmental statement during the comment period were considered in the preparation of and are reproduced in the final environmental statement. Public hearings on the draft environmental statement were held on December 5, 1978, in Salt Lake City, Utah; on December 6, 1978, in Richfield, Utah; and on December 7, 1978, in Price, Utah.

The final environmental impact statement is available for public review in the U.S. Geological Survey (USGS) Library, 1526 Cole Blvd., Golden, Colo.; the USGS Library, Room 4A100, 12201 Sunrise Valley Drive, Reston, Va.; USGS Area Mining Supervisor's Office, 8426 Federal Bldg., 125 South State St., Salt Lake City, Utah; USGS District Mining Supervisor's Office, 126 Elk St., Rock Springs, Wyo.; Office of the Regional Manager, Conservation Division, USGS, 7200 West Alameda Ave., Lakewood, Colo.; Office of the State Director, Bureau of Land Management (BLM), University Club Bldg., 136 East South Temple, Salt Lake City, Utah; BLM District Office, Moab, Utah; BLM District Office, Richfield, Utah; BLM Price River Resource Area Office, Price, Utah; BLM Henry Mountain Resource Area Office, Hanksville, Utah; BLM Denver Service Center Library, Bldg. 50, Federal Center, Denver, Colo.; Forest Supervisor's Office, USDA Forest Service (USFS), Manti-La Sal National Forest, 350 East Main St., Price, Utah; USFS Ferron District Ranger, 50 South Main St., Ferron, Utah; USFS Forest Supervisor, Fishlake National Forest, 170 North Main St., Richfield, Utah; USFS Richfield District Ranger, 55 South First East, Richfield, Utah; USFS Teasdale District Ranger, Teasdale, Utah; USFS Loa District Ranger, Loa, Utah.

Copies will also be available for public review at the following libraries: Utah State University, Logan, Utah; University of Utah, Salt Lake City, Utah; Brigham Young University, Provo, Utah; Weber State College, Ogden, Utah; Southern Utah State College, Cedar City, Utah; Dixie College, St. George, Utah; Carbon College of Eastern Utah, Price, Utah; Sevier County Bookmobile, 83 East Lenter St., Richfield, Utah; Price Public Library, 159 East Main St., Price, Utah; Salt Lake City Public Library, 209 East 500 South, Salt Lake City, Utah; Salt Lake County Public Library, 2197 East 7000 South, Salt Lake City, Utah; Richfield Public Library, 83 East Center St., Richfield, Utah; Carbon-Emery County Bookmobile, 159 East Main Street, Price, Utah; and Northern Arizona University Library, Flagstaff, Ariz.

A limited number of copies are available on request from the USGS Land Information and Analysis Office, Stop 701, Box 25046, Federal Center, Denver, Colo. 80225.

Dated: July 2, 1979.

Larry E. Meierotto,

Assistant Secretary of the Interior.

[FR Doc. 79-20914 Filed 7-5-79; 8:45 am]

BILLING CODE 4310-31-M

DEPARTMENT OF JUSTICE

Bureau of Prisons

Advisory Corrections Council; Meeting

Notice is hereby given that the Advisory Corrections Council in accordance with section 10(a)(2) of the Federal Advisory Committee Act (Pub. L. 92-463; 86 Stat. 770) will meet on Thursday and Friday, August 2 and 3 in Jackson, Wyoming.

This meeting is being held in conjunction with the Federal Probation Committee of the Federal Judicial Conference. Items which will be included on the agenda are: Revision of the Federal Criminal Code, the Federal role in Corrections, the Youth Corrections Act and discussion of major correctional issues of national scope and concern.

Signed at Washington, D.C., this 28th day of June, 1979.

Norman A. Carlson,

Director.

[FR Doc. 79-20759 Filed 7-5-79; 8:45 am]

BILLING CODE 4410-05-M

Drug Enforcement Administration

Controlled Substances; Proposed Aggregate Production Quotas for 1980

Section 306 of the Controlled Substances Act (21 U.S.C. 826) requires that the Attorney General establish aggregate production quotas for all controlled substances listed in Schedules I and II. This responsibility has been delegated to the Administrator of the Drug Enforcement Administration by § 0.100 of Title 28 of the Code of Federal Regulations.

The quotas are to provide adequate supplies of each substance for (1) the estimated medical, scientific, research, and industrial needs of the United States, (2) lawful export requirements, and (3) the establishment and maintenance of reserve stocks.

In determining the below listed proposed 1980 aggregate production quotas, the Administrator considered pursuant to Section 302 subsection (a) of the Public Health Services Act (42 U.S.C. 242(a)) the "results of studies and investigations of the quantities of narcotic drugs or other drugs subject to control under such Acts, together with reserves of such drugs, that are necessary to supply the normal and emergency medicinal and scientific requirements of the United States" which were supplied by the Department of Health, Education, and Welfare. In addition, the proposed aggregate quotas were established considering the following factors:

(1) Total actual 1978 and estimated 1979 and 1980 net disposals of each substance by all manufacturers.

(2) Projected trends in the national rate of net disposals of each substance.

(3) Estimates of inventories of each substance and of any substance manufactured from it, and trends in accumulation of such inventories.

(4) Projected demand as indicated by procurement quota applications which were filed pursuant to § 1303.12 of Title 21 of the Code of Federal Regulations.

Pursuant to Title 21 Code of Federal Regulations § 1303.23(c), the Administrator of the Drug Enforcement Administration will in early 1980 adjust individual manufacturing quotas allocated for the year based upon 1979 year-end inventory and actual 1979 disposition data supplied by quota

applicants for each basic class of Schedules I or II controlled substance.

Based upon consideration of the above factors, the Administrator of the Drug Enforcement Administration hereby proposes that aggregate production quotas for 1980 for the following controlled substances, expressed in grams of anhydrous acid or base, be established as follows:

Basic class	Proposed 1980 quota
Schedule I	
2,5-Dimethoxyamphetamine	32,000,000
Schedule II	
Alphaprodine	60,000
Amobarbital	6,089,000
Amphetamine	2,681,000
Anileridine	251,500
Cocaine	1,600,000
Codeine (for sale)	55,712,000
Codeine (for conversion)	2,902,000
Desoxyephedrine (1,644,000 grams for the production of levodesoxyephedrine for use in a non-controlled, non-prescription product, and 301,000 grams for the production of methamphetamine)	1,945,000
Dihydrocodeine	1,045,000
Diphenoxylate	1,220,000
Ecgonine (for conversion)	1,200,000
Ethylmorphine	25,000
Fentanyl	3,000
Hydrocodone	915,000
Hydromorphone	(1)
Levorphanol	11,000
Meperidine	10,500,000
Methadone	1,382,000
Methadone Intermediate (4-cyano-2-dimethylamino-4,4-diphenylbutane)	1,710,000
Methaqualone	11,476,000
Methylphenidate	1,202,000
Mixed Alkaloids of Opium	17,000
Morphine (for sale)	868,000
Morphine (for conversion)	67,556,000
Opium (tinctures, extracts, etc. expressed in terms of USP powdered opium)	2,284,000
Oxycodone (for sale)	1,800,000
Oxycodone (for conversion)	8,000
Oxymorphone	4,000
Pentobarbital	14,000,000
Phenmetrazine	2,073,000
Secobarbital	7,508,000
Thebaine (for sale)	2,368,000
Thebaine (for conversion)	1,579,000

[1] Reserved pending results of ongoing review.

All interested persons are invited to submit their comments and objections in writing regarding this proposal. A person may object to or comment on the proposals relating to any one or more of the above mentioned substances without filing comments or objections regarding the others. Comments and objections should be submitted in quintuplicate to the Administrator, Drug Enforcement Administration, United States Department of Justice, Washington, D.C. 20537, Attention: DEA Federal Register Representative, and must be received by August 6, 1979. If a person believes that one or more issues raised by him warrant a full adversary-type hearing, he should so state and summarize the reasons for his belief.

In the event that comments or objections to this proposal raise one or more issues which the Administrator finds, in his sole discretion, warrant a fully adversary-type hearing, the Administrator shall order a public hearing in the Federal Register summarizing the issues to be heard and setting the time for the hearing (which shall not be less than 30 days after the date of the order).

Dated: June 29, 1979.

Peter B. Bensinger,

Administrator, Drug Enforcement Administration.

[FR Doc. 79-20345 Filed 7-5-79; 8:45 am]

BILLING CODE 4410-09-M

DEPARTMENT OF LABOR

[Application No. D-211]

Pension and Welfare Benefit Programs; Proposed Exemption for Certain Transactions Involving Profit Sharing Plan for Employees of Stone, Marraccini & Patterson

AGENCY: Department of Labor.

ACTION: Notice of Proposed Exemption.

SUMMARY: This document contains a notice of pendency before the Department of Labor (the Department) of a proposed exemption from the prohibited transaction restrictions of the Employee Retirement Income Security act of 1974 (the Act) and from certain taxes imposed by the Internal Revenue code of 1954 (the Code). The proposed exemption would exempt a loan by the Stone, Marraccini and Patterson Profit Sharing Plan (the Plan) to Silvio P. Marraccini, Norman W. Patterson and Associates (the Partnership) which was entered into before the effective date of the Act, but after July 1, 1974, the date specified in the transitional rules contained in sections 414 and 2003 of the Act. The proposed exemption, if granted, would affect participants and beneficiaries of the Plain, the Partnership, certain officers of Stone, Marraccini and Patterson (the Employer), and other persons participating in the transaction.

DATES: Written comments and requests for a public hearing must be received by the Department on or before August 6, 1979.

EFFECTIVE DATE: If the proposed exemption is granted, the exemption will be effective January 1, 1975.

ADDRESS: All written comments and requests for a hearing (at least three copies) should be sent to Office of Fiduciary Standards, Pension and Welfare Benefit Programs, Room, C-4526, U.S. Department of Labor, 200 Constitution Avenue, N.W., Washington, D.C. 20216. Attention: Application No. D-211. The application for exemption and the comments received will be available for public inspection in the Public Documents Room of Pension and Welfare Benefit Programs, U.S. Department of Labor, Room N-4677, 200 Constitution Avenue, N.W., Washington, D.C. 20216.

FOR FURTHER INFORMATION CONTACT: Mr. Ronald D. Allen of the Department of Labor, (202) 523-7462. (This is not a toll-free number.)

SUPPLEMENTARY INFORMATION: Notice is hereby given of the pendency before the Department of a proposed exemption from the restrictions of sections 406(b)(1) and (2) of the Act and from the taxes imposed by sections 4975(a) and (b) of the Code, by reason of section 4975(c)(1)(E) of the Code.

The proposed exemption was requested in an application filed by the trustees of the Plan. Pursuant to section 408(a) of the Act and section 4975(c)(2) of the Code, and in accordance with the Procedures set forth in ERISA Procedure 75-1 (40 FR 18471, April 28, 1975). This application was filed with both the Department and the Internal Revenue Service. However, effective December 31, 1978, section 102 of Reorganization Plan No. 4 of 1978 (43 FR 47713, October 17, 1978) transferred the authority of the Secretary of the Treasury to issue exemptions of the type requested to the Secretary of Labor. Therefore, this notice of pendency is issued solely by the Department.

Summary of Facts and Representations

The application contains facts and representations with regard to the proposed exemption which are summarized below. Interested persons are referred to the application on file with the Department for the complete representations of the applicants.

1. On April 10, 1967, the Partnership purchased certain real property (the Property) for investment purposes. The Partnership is comprised of certain shareholders of the Employer, other employees of the Employer, and, in some cases, their spouses. As part of the purchase price of the property, the Partnership on April 10, 1967 gave a twenty-year promissory note (First Note) in the amount of $500,000 to Coldwell Banker and Company Real Estate Brokers (Coldwell Banker). The First Note is payable in monthly installments of $3,955 including a 7¼% per annum interest rate (final payment due may 1, 1987). The First Note is secured by a first deed of trust on the Property.

2. On July 18, 1972, the Plan loaned the Partnership $140,000 with an interest rate of 10% per annum, the maximum rate permitted under California usury laws, as evidenced by a promissory note (Second Note). The Second Note was payable in monthly installments of $1,850.20 until maturity on June 1, 1982, and was secured by a second deed of trust on the Property.

3. On October 1, 1974, the Partnership refinanced the Second Note with the Plan to permit the Partnership to buy out the interest of a deceased partner, Silvio Marraccini. The Second Note had an outstanding balance on that date of $118,547.95 and was replaced by a new note (Refinanced Second Note) for $175,000 bearing the same interest rate, 10%, with maturity on October 1, 1982. The Refinanced Second Note is payable in fully amortized monthly installments of $2,655.60 and is secured by a second deed of trust and an assignment of rents on the building located on the Property, the principal tenant of which is the Employer. The assignment of rents allows the Plan to collect and apply such rents for the purpose of securing the payment of the Refinanced Second Note. The monthly rents paid by the lessees of the building is approximately twice the amount needed to service the monthly payments on the First and Refinanced Second Notes.

4. At present the Refinanced Second Note represents less than 8% of the assets of the trust. The value of the Property which is the underlying security to the First and Refinanced Second Notes was appraised on August 2, 1974 by Henry T. Fulton of Coldwell Banker at $1,250,000. A property tax assessment by the City and County of San Francisco stated that the full value of the Property for the fiscal year ended June 30, 1977 was $1,402,500. As of June 30, 1977, the amount of all unpaid debt was $461,937 (First Note $332,205 and Refinanced Second Note $129,732).

5. The Bank of America National Trust and Savings Association (the Trustee) is the Trustee of the Plan. The Trustee is directed by an investment committee appointed by the Board of Directors of the Employer with respect to investments of the Plan. In 1974 and at present, three members of the management committee of the Partnership, Messrs. Patterson, Bettencourt, and Folkner, also served, and continued to serve, as members of the investment committee of the Plan. They are also officers of the Employer.

6. The applicants state the proposed transaction meets the statutory criteria of section 408(a) of the Act as follows: (1) the loan represents less than 8% of the Plan assets; (2) the Refinanced Second Note is secured not only by a second deed of trust on the Property representing 250% of the amount of the total outstanding debt but also by an assignment of rents which permits the Trustee to immediately collect rents should any default in payment occur; and (3) at the time the loan agreement was negotiated, the interest rate received by the Plan represented the highest rate permitted under California usury laws.

7. Finally, the applicants represent that the loan was entered into prior to the effective date of the Act without knowledge that the transaction would become prohibited on January 1, 1975. As soon as the applicants realized that the loan was a prohibitied transaction, they submitted a good faith request for an exemption instead of terminating the loan transaction.

Notice to Interested Parties

Notice of the proposed exemption will be given to all interested parties within 15 days after such notice appears in the Federal Register. Such notice will be in writing and personally delivered and mailed to each interested party and shall inform them of their right to comment on the proposed exemption or request a hearing.

General Information

The attention of interested persons is directed to the following:

(1) The fact that a transaction is the subject of an exemption under section 408(a) of the Act and section 4975(c)(2) of the Code does not relieve a fiduciary or other party in interest or disqualified person from certain other provisions of the Act and the Code, including any prohibited transaction provisions to which the exemption does not apply and the general fiduciary responsibility provisions of section 404 of the Act which require, among other things, that a fiduciary discharge his duties respecting the Plan solely in the interests of the participants and beneficiaries of the Plan and in a prudent fashion in accordance with section 404(a)(1)(B) of the Act; nor does it affect the requirement of section 401(a) of the Code that the Plan must operate for the exclusive benefit of the employees of the employer maintaining the plan and their beneficiaries;

(2) The proposed exemption, if granted, will not extend to transactions prohibited under sections 406(a) and 406(b)(3) of the Act, and section 4975(c)(1) (A) through (D) and (F) of the Code;

(3) Before an exemption may be granted under section 408(a) of the Act and section 4975(c)(2) of the Code, the Department must find that the exemption is administratively feasible, in the interests of the Plan and of its participants and beneficiaries, and protective of the rights of participants and beneficiaries of the Plan; and

(4) The proposed exemption, if granted, will be supplemental to, and not in derogation of, any other provisions of the Act and the Code, including statutory or administrative exemptions and transitional rules. Furthermore, the fact that a transaction is subject to an administrative or statutory exemption is not dispositive of whether the transaction is in fact a prohibited transaction.

Written Comments and Hearing Requests

All interested persons are invited to submit written comments or requests for a hearing on the proposed exemption to the address and within the time period set forth above. All comments will be made a part of the record. Comments and requests for a hearing should state the reasons for the writer's interest in the proposed exemption. Comments received will be available for public inspection with the application for exemption at the address set forth above.

Proposed Exemption

Based on the facts and representations set forth in the application, the Department is considering granting the requested exemption under the authority of section 408(a) of the Act and section 4975(c)(2) of the Code and in accordance with the procedures set forth in ERISA Procedure 75-1. If the exemption is granted, the restrictions of section 406(b) (1) and (2) of the Act and the taxes imposed by section 4975 (a) and (b) of the Code, by reason of section 4975(c)(1)(E) of the Code, shall not apply to the refinancing agreement dated October 1, 1974 between the Plan and the Partnership. The proposed exemption, if granted, will be subject to the express conditions that the material facts and representations are true and complete; and that the application accurately describes all material terms of the transaction to be consummated pursuant to the exemption.

Signed at Washington, D.C this 28th day of June, 1979.

Ian D. Lanoff,

Administrator, Pension and Welfare Benefit Programs, Labor-Management Services Administration, U.S. Department of Labor.

[FR Doc. 79-20912 Filed 7-5-79; 8:45 am]

BILLING CODE 4510-29-M

Office of Secretary

Investigations Regarding Certifications of Eligibility To Apply for Worker Adjustment Assistance

Petitions have been filed with the Secretary of Labor under Section 221(a) of the Trade Act of 1974 ("the Act") and are identified in the Appendix to this notice. Upon receipt of these petitions, the Director of the Office of Trade Adjustment Assistance, Bureau of International Labor Affairs, has instituted investigations pursuant to Section 221(a) of the Act and 29 CFR 90.12.

The purpose of each of the investigations is to determine whether absolute or relative increases of imports of articles like or directly competitive with articles produced by the workers' firm or an appropriate subdivision thereof have contributed importantly to an absolute decline in sales or production, or both, of such firm or subdivision and to the actual or threatened total or partial separation of a significant number or proportion of the workers of such firm or subdivision.

Petitioners meeting these eligibility requirements will be certified as eligible to apply for adjustment assistance under Title II, Chapter 2, of the Act in accordance with the provisions of Subpart B of 29 CFR Part 90. The investigations will further relate, as appropriate, to the determination of the date on which total or partial separations began or threatened to begin and the subdivision of the firm involved.

Pursuant to 29 CFR 90.13, the petitioners or any other persons showing a substantial interest in the subject matter of the investigations may request a public hearing, provided such request is filed in writing with the Director, Office of Trade Adjustment Assistance, at the address shown below, not later than July 16, 1979.

Interested persons are invited to submit written comments regarding the subject matter of the investigations to the Director, Office of Trade Adjustment Assistance, at the address shown below, not later than July 16, 1979.

The petitions filed in this case are available for inspection at the Office of the Director, Office of Trade Adjustment Assistance, Bureau of International Labor Affairs, U.S. Department of Labor, 200 Constitution Avenue, N.W., Washington, D.C. 20210.

Signed at Washington, D.C. this 29th day of June 1979.

Harold A. Bratt,

Acting Director, Office of Trade Adjustment Assistance.

Appendix

Petitioner: Union/workers or former workers of—	Location	Date received	Date of petition	Petition No.	Produced articles
Allied Chemical Corp Semet-Solvay Div.(workers).	Fairfield, Ala	6/22/79	6/15/79	TA-W-5677	Coal, coke, tar.
Armstrong Rubber Co. Eastern Division (URW).	West Haven, Conn	6/26/79	6/22/79	TA-W-5678	Tires.
Armstrong Rubber Co. Midwest Division (URW).	Des Moines, Iowa	6/26/79	6/22/79	TA-W-5679	Passenger, truck, and farm tires.
Armstrong Rubber Co. Southern Division (URW).	Natchez, Miss	6/26/79	6/22/79	TA-W-5680	Passenger and truck tires.
Hialeah Dress, Inc. (workers)	Hialeah, Fla	6/15/79	6/4/79	TA-W-5681	Blouses, dresses, sportswear, etc.

[FR Doc. 79-20889 Filed 7-5-79; 8:45 am]

BILLING CODE 4510-28-M

Investigations Regarding Certifications of Eligibility To Apply for Worker Adjustment Assistance

Petitions have been filed with the Secretary of Labor under Section 221(a) of the Trade Act of 1974 ("the Act") and are identified in the Appendix to this notice. Upon receipt of these petitions, the Director of the Office of Trade Adjustment Assistance, Bureau of International Labor Affairs, has instituted investigations pursuant to Section 221(a) of the Act and 29 CFR 90.12.

The purpose of each of the investigations is to determine whether absolute or relative increases of imports of articles like or directly competitive with articles produced by the workers' firm or an appropriate subdivision thereof have contributed importantly to an absolute decline in sales or production, or both, of such firm or subdivision and to the actual or threatened total or partial separation of a significant number or proportion of the workers of such firm or subdivision.

Petitioners meeting these eligibility requirements will be certified as eligible to apply for adjustment assistance under Title II, Chapter 2, of the Act in accordance with the provisions of Subpart B of 29 CFR Part 90. The investigations will further relate, as appropriate, to the determination of the date on which total or partial separations began or threatened to begin and the subdivision of the firm involved.

Pursuant to 29 CFR 90.13, the petitioners or any other persons showing a substantial interest in the subject matter of the investigations may request a public hearing, provided such request is filed in writing with the Director, Office of Trade Adjustment Assistance, at the address shown below, not later than July 16, 1979.

Interested persons are invited to submit written comments regarding the subject matter of the investigations to the Director, Office of Trade Adjustment Assistance, at the address shown below, not later than July 16, 1979.

The petitions filed in this case are available for inspection at the Office of the Director, Office of Trade Adjustment Assistance, Bureau of International Labor Affairs, U.S. Department of Labor, 200 Constitution Avenue, N.W., Washington, D.C. 20210.

Signed at Washington, D.C. this 27th day of June of 1979.

Marvin M. Fooks,

Director, Office of Trade Adjustment Assistance.

Appendix

Petitioner: Union/workers or former workers of—	Location	Date received	Date of petition	Petition No.	Articles produced
Ansewn Shoe Corp. (workers)	Bangor, Maine	6/26/79	6/20/79	TA-W-5660	Women's and men, shoes.
ARMCO Steel Corp. (UMWA)	Davis, Calif.	6/21/79	6/15/79	TA-W-5661	Corrugated steel pipe.
Cerro Coat (ILGWU)	Hoboken, N.J	6/12/79	6/5/79	TA-W-5662	Ladies coats.
Chrysler Corp. Lyon-Trim Plant (workers)	Lyons, Mich	5/31/79	5/26/79	TA-W-5663	Internal trim for Chrysler cars, seat backs, kick pads seat cushions.
Deer Park Baking Co. (workers)	Hammonton, N.J	6/21/79	6/14/79	TA-W-5664	Butter cookies, Danish cookies, other types cookies
J Z Coat Co. (ILGWU)	Jersey City, N.J	6/21/79	6/5/79	TA-W-5665	Ladies coats.
Rockwell International, Draper Division (USW, & MOLDERS).	Hopedale, Mass	4/27/79	4/23/79	TA-W-5666	Draper looms, repair parts.

[FR Doc. 79-20890 Filed 7-5-79; 8:45 am]

BILLING CODE 4510-28-M

Investigations Regarding Certifications of Eligibility To Apply for Worker Adjustment Assistance.

Petitions have been filed with the Secretary of Labor under Section 221(a) of the Trade Act of 1974 ("the Act") and are identified in the Appendix to this notice. Upon receipt of these petitions, the Director of the Office of Trade Adjustment Assistance, Bureau of International Labor Affairs, has instituted investigations pursuant to Section 221(a) of the Act and 29 CFR 90.12.

The purpose of each of the investigations is to determine whether absolute or relative increases of imports of articles like or directly competitive with articles produced by the workers' firm or an appropriate subdivision thereof have contributed importantly to an absolute decline in sales or production, or both, of such firm or subdivision and to the actual or threatened total or partial separation of a significant number or proportion of the workers of such firm or subdivision.

Petitioners meeting these eligibility requirements will be certified as eligible to apply for adjustment assistance under Title II, Chapter 2, of the Act in accordance with the provisions of Subpart B of 29 CFR Part 90. The investigations will further relate, as appropriate, to the determination of the date on which total or partial separations began or threatened to begin and the subdivision of the firm involved.

Pursuant to 29 CFR 90.13, the petitioners or any other persons showing a substantial interest in the subject matter of the investigations may request a public hearing, provided such request is filed in writing with the Director, Office of Trade Adjustment Assistance, at the address shown below, not later than July 16, 1979.

Interested persons are invited to submit written comments regarding the subject matter of the investigations to the Director, Office of Trade Adjustment Assistance, at the address shown below, not later than July 16, 1979.

The petitions filed in this case are available for inspection at the Office of the Director, Office of Trade Adjustment Assistance, Bureau of International Labor Affairs, U.S. Department of Labor, 200 Constitution Avenue, N.W., Washington, D.C. 20210.

Signed at Washington, D.C. this 28th day of June, 1979.

Harold A. Bratt,

Acting Director, Office of Trade Adjustment Assistance.

Appendix

Petitioner: Union/workers or former workers of—	Location	Date received	Date of petition	Petition No.	Articles produced
Baker Marine Corp. (UMWA)	Ingleside, Tex	6/19/79	6/12/79	TA-W-5667	Offshore drilling rigs, gear units and jacks.
Big Four Trucking Company, Inc. (workers)	Logan, W. Va	6/26/79	6/18/79	TA-W-5668	Hauled coal.
Coats and Clark's (workers)	Fair Lawn, N.J	6/3/79	6/3/79	TA-W-5669	Thread, yarn, hand knitting, sewing notions (distribution center).
Hallet Dock Co. (ILA)	Duluth, Minn	6/25/79	6/20/79	TA-W-5670	Operate a dock facility for coal.
Marlin Knit Inc. (workers)	Brooklyn, N.Y	6/25/79	6/16/79	TA-W-5671	Ladies sweaters.
Robalx Fabrics (workers)	New York, N.Y	6/25/79	6/18/79	TA-W-5672	Printed fabrics, polyester, nylon, acetate/nylon.
Servomation (workers)	Stamford, Conn	6/26/79	6/11/79	TA-W-5673	Food service company, contracted to operate cafeterias.
Shaw Mfg. Inc. (ACTWU)	Los Angeles, Calif	6/26/79	6/21/79	TA-W-5674	Men's sportshirts, and jackets.
Songo Shoe Mfg. Corp. (workers)	Portland, Maine	6/25/79	6/19/79	TA-W-5675	Men's and women's golf shoes, work shoes, cross country boots.
Universal Car-Loading Distributing Co. (workers).	New York, N.Y	6/22/79	6/8/79	TA-W-5676	Freight fowarder, unload trailer's from boats, and forward the freight via piggy-back (railroad).

[FR Doc. 79-20891 Filed 7-5-79; 8:45 am]

BILLING CODE 4510-28-M

Investigations Regarding Certifications of Eligibility To Apply For Worker Adjustment Assistance

Petitions have been filed with the Secretary of Labor under Section 221(a) of the Trade Act of 1974 ("the Act") and are identified in the Appendix to this notice. Upon receipt of these petitions, the Director of the Office of Trade Adjustment Assistance, Bureau of International Labor Affairs, has instituted investigations pursuant to Section 221(a) of the Act and 29 CFR 90.12.

The purpose of each of the investigations is to determine whether absolute or relative increases of imports of articles like or directly competitive with articles produced by the workers' firm or an appropriate subdivision thereof have contributed importantly to an absolute decline in sales or production, or both, of such firm or subdivision and to the actual or threatened total or partial separation of a significant number or proportion of the workers of such firm or subdivision.

Petitioners meeting these eligibility requirements will be certified as eligible to apply for adjustment assistance under Title II, Chapter 2, of the Act in accordance with the provisions of Subpart B of 29 CFR Part 90. The investigations will further relate, as appropriate, to the determination of the date on which total or partial separations began or threatened to begin and the subdivision of the firm involved.

Pursuant to 29 CFR 90.13, the petitioners or any other persons showing a substantial interest in the subject matter of the investigations may request a public hearing, provided such request is filed in writing with the Director, Office of Trade Adjustment Assistance, at the address shown below, not later than July 16, 1979.

Interested persons are invited to submit written comments regarding the subject matter of the investigations to the Director, Office of Trade Adjustment Assistance, at the address shown below, not latter than July 16, 1979.

The petitions filed in this case are available for inspection at the Office of the Director, Office of Trade Adjustment Assistance, Bureau of International Labor Affairs, U.S. Department of Labor, 200 Constitution Avenue, N.W., Washington, D.C. 20210.

Signed at Washington, D.C. this 26th day of June 1979.

Harold A. Bratt,

Acting Director, Office of Trade Adjustment Assistance.

Appendix

Petitioner: Union/workers or former workers of—	Location	Date received	Date of petition	Petition No.	Articles produced
Gant Shirt Inc. (ACTWU)	New Haven, Conn	6/18/79	6/14/79	TA-W-5650	Women's slacks, blouses, skirts, and men's shirts.
Italcraft (ILGWU)	Hoboken, N.J	6/11/79	6/5/79	TA-W-5651	Ladies' coats.
Junior Gallery Ltd. (workers) 168Secaucus, N.J.		5/18/79	5/11/79	TA-W-5652	Junior outerwear.
Junior Portrait (workers)	Secaucus, N.J	5/18/79	5/11/79	TA-W-5653	Junior outerwear.
Midway Shake Co. (workers)	Tillamook, Oreg	6/14/79	6/C/79	TA-W-5654	Cedar shingles and shakes.
Miss Gallery Ltd. (workers)	Secaucus, N.J	5/18/79	5/11/79	TA-W-5655	Misses outerwear.
Sterling Smokeless Coal Co., Mine No. 10 (UMWA).	Raleigh County, W. Va	5/18/79	5/10/79	TA-W-5656	Metallurgical coal, and coke.
Sterling Smokeless Coal Co., Mine No. 12 (UMWA).	Raleigh County, W. Va	5/18/79	5/11/79	TA-W-5657	Low volatile, metallurgical coal, and coke.
Sterling Smokeless Coal Co., Mine No. 17 (UMWA).	Beckley, W. Va	5/18/79	5/11/79	TA-W-5658	Low volatile, metallurgical coal, and coke.
U.S. Steel Corp., American Bridge Division (workers).	Commerce, Calif	5/31/79	5/22/79	TA-W-5659	Structural steel, and plates for bridges.

[FR Doc. 79-20895 Filed 7-5-79; 8:45 am]

BILLING CODE 4510-28-M

[TA-W- 4782 and 4790, 4794A]

B.B.M., Inc., Harrison-Beach, Inc., Parlane Sportswear Co., Inc., and P.G.S. Corp., Boston, Mass.; Affirmative Determination Regarding Application for Reconsideration

On April 13, 1979, the management of B.B.M., Inc., Harrision-Beach, Inc., Parlane Sportswear Co., Inc., and P.G.S. Corporation, acting on behalf of workers at the firm, applied for administrative reconsideration of the Department of Labor's Negative Determination Regarding Eligibility to Apply for worker Adjustment Assistance in the case of workers and former workers of B.B.M., Inc., Harrision-Beach, Inc., Parlane Sportswear Co., Inc., and P.G.S. Corporation, Boston, Massachusetts. This determination was published in the Federal Register on April 20, 1979, (44 FR 23599).

The applicant believes the Department did not properly interpret the results of the survey of B.B.M., Inc., and Parlane Sportswear Co., Inc.'s customers. The applicant states that had the Department considered the survey in light of the multi-product, multi-trade-label nature of the companies, the Department would have found employment and production adversely affected by import competition.

Conclusion

After review of the application, I conclude that this claim of the applicant is of sufficient weight to justify reconsideration of the Department of Labor's prior decision. The application is, therefore, granted.

Signed at Washington, D.C., this 28th day of June 1979.

Harry J. Gilman,

Supervisory International Economist, Office of Foreign Economic Research.

[FR Doc. 79-20892 Filed 7-5-79; 8:45 am]

BILLING CODE 4510-28-M

[TA-W-5513]

Bis Mark, Logan, W. Va. Termination of Investigation

Pursuant to Section 221 of the Trade Act of 1974 an investigation was initiated on June 7, 1979, in response to a worker petition received on May 23, 1979, which was filed on behalf of workers and former workers mining coal at Bis Mark, Logan, West Virginia.

Bis Mark had been in operation for less than three months at the time of the investigation. Due to the short term of operation of Bis Mark, it is not possible to determine trends of sales and production and to statistically measure the impact of imports. In addition, worker qualifying requirements in Section 231 of the Act may not be met by any employees of Bis Mark. Consequently, the investigation has been terminated.

Signed at Washington, D.C. this 28th day of June 1979.

Harold A. Bratt

Acting Director, Office of Trade Adjustment Assistance.

[FR Doc. 79-20893 Filed 7-5-79; 8:45 am]

BILLING CODE 4510-28-M

[TA-W-5304]

Conair Corp., Edison, N.J.

Certification Regarding Eligibility To Apply for Worker Adjustment Assistance

In Accordance with Section 223 of the Trade Act of 1974 (19 USC 2273) the Department of Labor herein presents the results of an investigation regarding certification of eligibility to apply for worker adjustment assistance.

In order to make an affirmative determination and issue a certification of eligibility to apply for adjustment assistance, each of the group eligibility requirements of Section 222 of the Act must be met.

The investigation was initiated on April 26, 1979 in response to a worker petition received on April 9, 1979 which was filed on behalf of workers and former workers producing hair care and personal care appliances at the Edison, New Jersey plant of Conair Corporation. It is concluded that all of the requirements have been met.

U.S. imports of electric hair dryers increased annually from 1975 through 1978. The ratio of imports to domestic hair dryer production increased from 454.7 percent in 1977 to 485.8 percent in 1978.

The investigation revealed that hair dryers accounted for the largest portion of production at the Edison plant. Company imports of hair dryers increased relative to hair dryer production at Edison from 1977 to 1978 and increased in first quarter of 1979. A Department survey revealed that some customers reduced purchases of hair dryers from Conair and increased purchases of imported hair dryers.

Conclusion

After careful review of the facts obtained in the investigation, I conclude that increases of imports of articles like or directly competitive with hair care and personal care appliances produced at the Edison, New Jersey plant of Conair Corporation contributed importantly to the decline in sales or production and to the total or partial separation of workers of that firm. In accordance with the provisions of the Act, I make the following certification:

All workers of the Edison, New Jersey plant of Conair Corporation who became totally or partially separated from employment on or after July 1, 1978 are eligible to apply for adjustment assistance under Title II, Chapter 2 of the Trade Act of 1974.

Signed at Washington, D.C. this 28th day of June 1979.

C. Michael Aho,

Director, Office of Foreign Economic Research.

[FR Doc. 79-20894 Filed 7-5-79; 8:45 am]

BILLING CODE 4510-23-M

[TA-W-5455]

Hull Dye & Print Works, Inc., Derby, Conn.; Negative Determination Regarding Eligibility To Apply for Worker Adjustment Assistance

In accordance with Section 223 of the Trade Act of 1974 (19 USC 2273) the department of Labor Herein presents the results of an investigation regarding certification of eligibility to apply for worker adjustment assistance.

In order to make an affirmative determination and issue a certification of eligibility to apply for adjustment assistance each of the group eligibility requirements of Section 222 of the Act must be met.

The investigation was intiated on May 24, 1979 in response to a worker petition received on May 21, 1979 which was filed by the Machine Printers and Engravers Association on behalf of workers and former workers processing, printing and dyeing all textile materials at Hull Dye and Print Works, Incorporated, Derby, Connecticut, in the following determination, without regard to whether any of the criteria have been met, the following criterion has not been met:

That increases of imports of articles like or directly competitive with articles produced by the firm or appropriate subdivision have contributed importantly to the separations, or threat thereof, and to the absolute decline in sales or production.

The Department conducted a survey of Hull Dye and Print Works, Incorporated's customers. Survey respondents reported they did not generally have fabric finished offshore or import finished fabric during the period 1977 through May 1978. None of the respondents decreased their contracts with Hull while increasing imports of fabric.

Conclusion

After careful review, I determine that all workers of Hull Dye and Print Works, Incorporated, Derby, Connecticut, are denied eligibility to apply for adjustment assistance under Title II, Chapter 2 of the Trade Act of 1974.

Signed at Washington, D.C., this 29th day of June 1979.

Harry J. Gilman,

Supervisory International Economist, Office of Foreign Economic Research.

[FR Doc. 79-20896 Filed 7-5-79; 8:45 am]

BILLING CODE 4510-28-M

[TA-W-5295]

Joseph J. Piertrafesa Co., Inc., Syracuse, N.Y.; Negative Determination Regarding Eligibility To Apply for Worker Adjustment Assistance

In accordance with Section 223 of the Trade Act of 1974 (19 USC 2273) the Department of Labor herein presents the results of an investigation regarding certification of eligibility to apply for worker adjustment assistance.

In order to make an affirmative determination and issue a certification of eligibility to apply for adjustment assistance each of the group eligibility requirements of Section 222 of the Act must be met.

The investigation was initiated on April 25, 1979 in response to a worker petition received on April 23, 1979 which was filed by the Amalgamated Clothing and Textile Workers' Union on behalf of workers and former workers producing

men's tailored clothing at the Joseph J. Piertrafesa Company, Incorporated, Syracuse, New York. The investigation revealed that the plant produces men's suitcoats, vests, pants and sportcoats. In the following determination, without regard to whether any of the other criteria have been met, the following criterion has not been met:

That increases of imports of articles like or directly competitive with articles produced by the firm or appropriate subdivision have contributed importantly to the separations, or threat thereof, and to the absolute decline in sales or production.

A Departmental survey was conducted with the manufacturer who decreased orders from Piertrafesa for Spring 1979 compared to Spring 1978. This manufacturer did not utilize foreign sources. The manufacturer experienced a decline in its own sales of men's suits and sportcoats in the Spring 1979 season.

A survey was then conducted with the retail customers of this manufacturer. It was found that those customers who decreased orders from that manufacturer and who increased their purchase of imported men's suits and sportcoats also significantly increased their purchases from other domestic manufacturers.

Conclusion

After careful review, I determine that all workers of the Joseph J. Piertrafesa Company, Incorporated, Syracuse, New York are denied eligibility to apply for adjustment assistance under Title II, Chapter 2 of the Trade Act of 1974.

Signed at Washington, D.C. this 28th day of June 1979.

C. Michael Aho,

Director, Office of Foreign Economic Research.

[FR Doc. 79-20897 Filed 7-5-79; 8:45 am]

BILLING CODE 4510-28-M

[TA-W-5289 and TA-W-5294]

Maryland Hampstead Clothing Co., Hampstead, Md., and Paramount Clothing Co., Baltimore, Md.; Certification Regarding Eligibility To Apply for Worker Adjustment Assistance

In accordance with Section 223 of the Trade Act of 1974 (19 U.S.C. 2273) the Department of Labor herein presents the results of an investigation regarding certification of eligibility to apply for worker adjustment assistance.

In order to make an affirmative determination and issue a certification of eligibility to apply for adjustment assistance each of the group eligibility requirements of Section 222 of the Act must be met.

The investigation was initiated on April 25, 1979 in response to a worker petition received on April 23, 1979 which was filed by the Amalgamated Clothing and Textile Workers' Union on behalf of workers and former workers producing men's shirts at Maryland-Hampstead Clothing Company, Hampstead, Maryland (TA-W-5289) and workers and former workers cutting, shipping, examining and assembling clothing and also doing all billing at Paramount Clothing Company, Baltimore, Maryland (TA-W-5294). The investigation revealed that Maryland-Hampstead Clothing Company and Paramount Clothing Company produced men's suits and that the production of men's suits is integrated between the two companies. The investigation also revealed that Paramount Clothing is the parent firm of Maryland-Hampstead Clothing. It is concluded that all of the requirements have been met.

The U.S. imported 3,871 thousand men's and boys' tailored suits in 1978 compared to an annual average of 3,279 thousand suits during the period 1974 to 1977. The ratio of imports to domestic production in 1978 was 17.5 percent compared to an annual ratio of 18.5 percent during the period 1974 to 1977.

The Department conducted a survey of the sole customer of Paramount. The survey revealed that the customer decreased purchases from Paramount and increased purchases of imported suits in 1978 compared to 1977. The survey further revealed that the customer decreased purchases of imported suits in the first quarter of 1979 compared to the same period of 1978.

Conclusion

After careful review of the facts obtained in the investigation, I conclude that increases of imports of articles like or directly competitive with men's suits produced at Maryland-Hampstead Clothing Company, and Paramount Clothing Company contributed importantly to the decline in sales or production and to the total or partial separation of workers of that firm. In accordance with the provisions of the Act, I make the following certification:

All workers of Maryland-Hampstead Clothing Company, Hampstead, Maryland and of Paramount Clothing Company, Baltimore, Maryland who became totally or partially separated from employment on or after April 17, 1978 and before July 1, 1979 are eligible to apply for adjustment assistance under Title II, Chapter 2 of the Trade Act of 1974.

Signed at Washington, D.C. this 28th day of June 1979.

Gloria S. Pratt,

Director, Office of Foreign Economic Policy.

[FR Doc. 79-20893 Filed 7-5-79; 8:45 am]

BILLING CODE 4510-28-M

[TA-W-5291]

Modern Slack Creations, Inc., Northampton, Pa.; Negative Determination Regarding Eligibility To Apply for Worker Adjustment Assistance

In accordance with Section 223 of the Trade Act of 1974 (19 USC 2273) the Department of Labor herein presents the results of an investigation regarding certification of eligibility to apply for worker adjustment assistance.

In order to make an affirmative determination and issue a certification of eligibility to apply for adjustment assistance each of the group eligibility requirements of Section 222 of the Act must be met.

The investigation was initiated on April 25, 1979 in response to a worker petition received on April 23, 1979 which was filed by the Amalgamated Clothing and Textile Workers' Union on behalf of workers and former workers producing ladies' and men's pants at the Northampton, Pennsylvania plant of Modern Slack Creations, Incorporated. In the following determination, without regard to whether any of the other criteria have been met, the following criterion has not been met:

That increases of imports of articles like or directly competitive with articles produced by the firm or appropriate subdivision have contributed importantly to the separations, or threat thereof, and to the absolute decline in sales or production.

A Departmental survey was conducted with the manufacturers from whom Modern Slack Creations received contract work. The survey revealed that the only manufacturer which imported slacks represented an insignificant amount of Modern Slack's contracts during 1977.

A survey was then conducted with the major retail customers of those manufacturers who reported declining company sales. For the most part, the retail customers did not import slacks in 1978 or during the first quarter of 1979; the only customer that did import slacks relied on foreign sources to fulfill an insignificant proportion of its total requirements for slacks.

Conclusion

After careful review, I determine that all workers of the Northampton,

Pennsylvania plant of Modern Slack Creations, Incorporated are denied eligibility to apply for adjustment assistance under Title II, Chapter 2 of the Trade Act of 1974.

Signed at Washington, D.C. this 28th day of June 1979.

Gloria S. Pratt,

Director, Office of Foreign Economic Policy.

[FR Doc. 79-20899 Filed 7-5-79; 8:45 am]

BILLING CODE 4510-28-M

[TA-W-5338 and 5339]

Muench-Kreuzer Candle Corp., Liverpool, N.Y., and Syracuse, N.Y.; Negative Determination Regarding Eligibility To Apply for Worker Adjustment Assistance

In accordance with Section 223 of the Trade Act of 1974 (19 USC 2273) the Department of Labor herein presents the results of an investigation regarding certification of eligibility to apply for worker adjustment assistance.

In order to make an affirmative determination and issue a certification of eligibility to apply for adjustment assistance each of the group eligibility requirements of Section 222 of the Act must be met.

The investigation was initiated on May 2, 1979 in response to a worker petition received on April 24, 1979 which was filed by the United Steelworkers of America on behalf of workers and former workers producing candles at the Liverpool and Syracuse, New York plants of the Muench-Kreuzer Candle Corporation. In the following determination, without regard to whether any of the other criteria have been met, the following criterion has not been met:

That increases of imports of articles like or directly competitive with articles produced by the firm or appropriate subdivision have contributed importantly to the separations, or threat thereof, and to the absolute decline in sales or production.

Production and clerical union workers were on strike from July 1, 1978 to July 24, 1978. In order to make up production lost during the strike, additional employees were hired temporarily during the third and fourth quarters of 1978. Some of these temporary workers were subsequently laid off during the fourth quarter of 1978 and the first quarter of 1979.

A certification applicable to the petitioning group of workers was issued on May 27, 1977. That certification remained in effect until May 27, 1979—two years from its date of issuance. No certification resulting from this investigation, therefore, may apply to any worker whose last total or partial separation from the subject firm occurred before May 27, 1979.

Average employment of production workers at the Liverpool and Syracuse, New York plants increased from 1976 to 1977, from 1977 to 1978, and during the first four months of 1979 compared to the same period of 1978.

Conclusion

After careful review, I determine that all workers of the Liverpool and Syracuse, New York plants of the Muench-Kreuzer Candle Corporation are denied eligibility to apply for adjustment assistance under Title II, Chapter 2 of the Trade Act of 1974.

Signed at Washington, D.C. this 28th day of June 1979.

C. Michael Aho,

Director, Office of Foreign Economic Research.

[FR Doc. 79-20900 Filed 7-5-79; 8:45 am]

BILLING CODE 4510-28-M

[TA-W-5293]

Northampton Pants Co., Inc., Easton, Pa.; Negative Determination Regarding Eligibility To Apply for Worker Adjustment Assistance

In accordance with Section 223 of the Trade Act of 1974 (19 USC 2273) the Department of Labor herein presents the results of an investigation regarding certification of eligibility to apply for worker adjustment assistance.

In order to make an affirmative determination and issue a certification of eligibility to apply for adjustment assistance, each of the group eligibility requirements of Section 222 of the Act must be met.

The investigation was initiated on April 25, 1979 in response to a worker petition received on April 23, 1979 which was filed by the Amalgamated Clothing and Textile Workers' Union on behalf of workers and former workers producing men' pants at Northampton Pants Company, Incorporated, Easton, Pennsylvania. In the following determination, without regard to whether any of the other criteria have been met, the following criterion has not been met:

That increases of imports of articles like or directly competitive with articles produced by the firm or appropriate subdivision have contributed importantly to the separations, or threat thereof, and to the absolute decline in sales or production.

A Departmental survey of the manufacturers, for which Northampton Pants Company worked, revealed that none of the manufacturers purchased imported men's slacks or contracted with foreign sources. The survey revealed that manufacturers, who significantly reduced purchases from Northampton in the first quarter of 1979 compared to the same quarter one year earlier, experienced reduced sales of men's slacks to retailing firms during this time period. A survey of the manufacturers' retail customers indicated that the customers either do not buy imported men's slacks or increased purchases from other domestic manufacturers by an amount greater than the amount of increased purchases of imports. None of the retailers surveyed increased the proportion that imported men's slacks represented of its total men's slacks purchases.

Conclusion

After careful review, I determine that all workers of Northampton Pants Company, Incorporated, Easton, Pennsylvania are denied eligibility to apply for adjustment assistance under Title II, Chapter 2 of the Trade Act of 1974.

Signed at Washington, D.C. this 28th day of June 1979.

Gloria S. Pratt,

Director, Office of Foreign Economic Policy.

[FR Doc. 79-20901 Filed 7-5-79; 8:45 am]

BILLING CODE 4510-28-M

[TA-W-5348]

Rolim Coal Co., Crab Orchard, W. Va.; Termination of Investigation

Pursuant to Section 221 of the Trade Act of 1974, an investigation was initiated on May 2, 1979, in response to a worker petition received on April 2, 1979, which was filed by the United Mine Workers of America on behalf of workers and former workers of the Rolim Coal Company of Crab Orchard, West Virginia, mining coal at the Rolim Deep Mine, Raleigh County, West Virginia. The investigation revealed that the company also mined coal at the Bonnie Beth and Tarrah Leigh Mines, Raleigh County, West Virginia.

Workers at the Bonnie Beth and Tarrah Leigh Mines are covered by an existing certification—applicable to the petitioning workers at the Bonnie Beth Mine, Shady Spring, West Virginia (TA-W-5170) and at the Tarrah Leigh Mine, Daniels, West Virginia (TA-W-5171)—which was issued on June 5, 1979. In addition, Rolim Coal Company operated at the Rolim Deep Mine for less than six

months at the time of the investigation. Due to the short term of operation of Rolim Coal Company at the Rolim Deep Mine, it is not possible to determine trends of sales and production and to statistically measure the impact of imports. In addition, worker qualifying requirements in Section 231 of the Act may not be met by any employees of Rolim Coal Company at the Rolim Deep Mine. Consequently, the investigation has been terminated.

Signed at Washington, D.C. this 28th day of June 1979.

Harold A. Bratt,

Acting Director, Office of Trade Adjustment Assistance.

[FR Doc. 79-20902 Filed 7-5-79; 8:45 am]

BILLING CODE 4510-28-M

[TA-W-5355]

Ronaele Coal Co., Omar, W. Va.; Negative Determination Regarding Eligibility To Apply for Worker Adjustment Assistance

In accordance with Section 223 of the Trade Act of 1974 (19 USC 2273) the Department of Labor herein presents the results of an investigation regarding certification of eligibility to apply for worker adjustment assistance.

In order to make an affirmative determination and issue a certification of eligibility to apply for adjustment assistance each of the group eligibility requirements of Section 222 of the Act must be met.

The investigation was initiated on May 3, 1979 in response to a worker petition received on April 30, 1979 which was filed on behalf of workers and former and former workers engaged in the mining of coal at Ronaele Coal Company, Omar, West Virginia. In the following determination, without regard to whether any of the other criteria have been met, the following criterion has not been met:

That increases of imports of articles like or directly competitive with articles produced by the firm or appropriate subdivision have contributed importantly to the separations, or threat thereof, and to the absolute decline in sales or production.

Ronaele Coal Company mined metallurgical coal under contract with another coal company which sells all of its metallurgical coal to a single customer. A department survey revealed that that customer did not purchase imported metallurgical coal or coke in the 1976–1978 period.

Conclusion

After careful review, I determine that all workers of Ronaele Coal Company, Omar, West Virginia are denied eligibility to apply for adjustment assistance under Title II, Chapter 2 of the Trade Act of 1974.

Signed at Washington, D.C. this 28th day of June 1979.

C. Michael Aho,

Director, Office of Foreign Economic Research.

[FR Doc. 79-20903 Filed 7-5-79; 8:45 am]

BILLING CODE 4510-28-M

[TA-A-5433]

Triple "C" Construction Co., Inc., Huntington and Logan County, W. Va.; Certification Regarding Eligibility To Apply for Worker Adjustment Assistance

In accordance with Section 223 of the Trade Act of 1974 (19 U.S.C. 2273) the Department of Labor herein presents the results of an investigation regarding certification of eligibility to apply for worker adjustment assistance.

In order to make an affirmative determination and issue a certification of eligibility to apply for adjustment assistance, each of the group eligibility requirements of Section 222 of the Act must be met.

The investigation was initiated on May 18, 1979 in response to a worker petition received on May 14, 1979 on behalf of workers and former workers performing construction projects for Triple "C" Construction Company, Huntington, West Virginia. The investigation revealed that the company headquarters is in Huntington, West Virginia. The plant is located in Logan County, West Virginia. It is concluded that all of the requirements have been met.

U.S. imports of metallurgical coal are negligible. However, in accordance with Section 222 of the Trade Act of 1974 and 29 CFR 90.2, a domestic article may be "directly competitive" with an imported article at a later stage of processing. Coke is metallurgical coal at a later stage of processing. U.S. imports of coke increased both absolutely and relative to domestic production in 1977 compared to 1976 and in 1978 compared to 1977.

Workers at Triple "C" Construction Company performed construction for general projects around coal mining sites owned by Chafin Coal Company, Incorporated. Workers at Chafin Coal Company were certified eligible to apply for adjustment assistance on May 7, 1979 (TA-W-5009-5015, 5015A). The owners of Chafin Coal Company also own Triple "C" Construction Company.

Conclusion

After careful review of the facts obtained in the investigation, I conclude that increases of imports of articles like or directly competitive with metallurgical coal produced at the #2 A Mine, the #4 Mine, the #5 Mine, the #6 Mine, the #7 Mine, the #10 Mine, and the Chafin Preparation Plant of Chafin Coal Company, Logan, West Virginia contributed importantly to the decline in sales or production and to the total or partial separation of workers engaged in employment related to construction projects at the Triple "C" Construction Company, Incorporated, Huntington and Logan County, West Virginia. In accordance with the provisions of the Act, I make the following certification:

All workers of Triple "C" Construction Company, Huntington, and Logan County, West Virginia who became totally or partially separated from employment on or after November 25, 1978 are eligible to apply for adjustment assistance under Title II, Chapter 2 of the Trade Act of 1974.

Signed at Washington, D.C., this 28th day of June 1979.

C. Michael Aho,

Director, Office of Foreign Economic Research.

[FR Doc. 79-20904 Filed 7-5-79; 8:45 am]

BILLING CODE 4510-28-M

[TA-W-3834]

U.S. Steel Corp., Aircraft Division, Pittsburgh, Pa.; Revised Certification of Eligibility To Apply for Worker Adjustment Assistance

In accordance with Section 223 of the Trade Act of 1974, the Department of Labor issued a certification of eligibility to apply for adjustment assistance on September 6, 1978, applicable to all workers of the Pittsburgh, Pennsylvania facility of the Aircraft Division of U.S. Steel Corporation, Pittsburgh, Pennsylvania. The Notice of Certification was published in the Federal Register on September 15, 1978, (43 FR 41311).

At the request of three former workers of U.S. Steel's Steelair facility in Trenton, New Jersey, a further review was made. The review of the case revealed that Steelair at Trenton, New Jersey was a supporting unit and a part of the Aircraft Division of U.S. Steel headquarters at Pittsburgh, Pennsylvania. Under the circumstances, workers at the Steelair's Trenton, New Jersey facility are considered part of the Aircraft Division at Pittsburgh and for purposes of the Act as belonging to the same appropriate subdivision as the Pittsburgh workers.

The intent of the certification is to cover all workers of the Aircraft Division of the U.S. Steel Corporation who were affected by increased imports of articles like or directly competitive with the steel products produced at the various U.S. Steel Corporation plants whose workers have already been certified eligible for adjustment assistance. The certification, therefore is revised to include all workers of U.S. Steel Corporation's Steelair at Trenton, New Jersey.

The revised certification applicable to TA-W-3834 is hereby issued as follows:

All workers at the Aircraft Division of the U.S. Steel Corporation located at Pittsburgh, Pennsylvania, and the supporting unit of Steelair at Trenton, New Jersey, who became totally or partially separated from employment on or after November 1, 1977, are eligible to apply for adjustment assistance under Title II, Chapter 2 of the Trade Act of 1974.

Signed at Washington, D.C., this 28th day of June 1979.

Harry J. Gilman,

Supervisory International Economist, Office of Foreign Economic Research.

[FR Doc. 79-20305 Filed 7-5-79; 8:45 am]

BILLING CODE 4510-28-M

[TA-W-5202]

Vulcan Corp., Amesbury, Mass.; Negative Determination Regarding Eligibility To Apply for Worker Adjustment Assistance

In accordance with Section 223 of the Trade Act of 1974 (19 U.S.C. 2273) the Department of Labor herein presents the results of an investigation regarding certification of eligibility to apply for worker adjustment assistance.

In order to make an affirmative determination and issue a certification of eligibility to apply for adjustment assistance each of the group eligibility requirements of Section 222 of the Act must be met.

The investigation was initiated on April 10, 1979 in a response to a worker petition received on April 6, 1979 which was filed on behalf of workers and former workers producing unit soles and heels at the Amesbury, Massachusetts plant of the Vulcan Corporation. In the following determination, without regard to whether any of the other criteria have been met, the following criterion has not been met:

That increases of imports of articles like or directly competitive with articles produced by the firm or appropriate subdivision have contributed importantly to the separations, or threat thereof, and to the absolute decline in sales or production.

A sample survey of customers of the subject firm revealed that most customers did not purchase imported unit soles and heels. The customers who did purchase imported unit soles and heels represent an insignificant portion of total sales of the subject firm.

Conclusion

After careful review, I determine that all workers at the Amesbury, Massachusetts plant of the Vulcan Corporation are denied eligibility to apply for adjustment assistance under Title II, Chapter 2 of the Trade Act of 1974.

Signed at Washington, D.C. this 28th day of June 1979.

C. Michael Aho,

Director, Office of Foreign Economic Research.

[FR Doc. 79-20306 Filed 7-5-79; 8:45 am]

BILLING CODE 4510-28-M

[TA-W-5379]

Wallace-Murray Corp., Simonds Cutting Tools Division, Fitchburg, Mass.; Negative Determination Regarding Eligibility To Apply for Worker Adjustment Assistance

In accordance with Section 223 of the Trade Act of 1974 (19 U.S.C. 2273) the Department of Labor herein presents the results of an investigation regarding certification of eligibility to apply for worker adjustment assistance.

In order to make an affirmative determination and issue a certification of eligibility to apply for adjustment assistance each of the group eligibility requirements of Section 222 of the Act must be met.

The investigation was initiated on May 10, 1979 in response to a worker petition received on May 4, 1979 which was filed by the United Steel Workers of America on behalf of workers and former workers of Fitchburg, Massachusetts plant of Simonds Cutting Tools Division, Wallace-Murray Corporation. In the following determination, without regard to whether any of the criteria have been met, the following criterion has not been met:

That increases of imports of articles like or directly competitive with articles produced by the firm or appropriate subdivision have contributed importantly to the separations, or threat thereof, and to the absolute decline in sales or production.

Total sales and production at the Fitchburg, Massachusetts plant of Simonds increased from 1977 to 1978, and in the first four months of 1979 compared to the same period of 1978. Total sales and production increased in each quarter of 1978 compared to the like quarter of 1977.

The only declines in production the company experienced were from the second to the third quarter of 1978, and were due to the loss of the Iranian export market.

Conclusion

After careful review, I determine that all workers at the Fitchburg, Massachusetts plant of Simonds Cutting Tools Division of Wallace-Murray Corporation are denied eligibility to apply for adjustment assistance under Title II, Chapter 2 of the Trade Act of 1974.

Signed at Washington, D.C. this 28th day of June 1979.

C. Michael Aho,

Director, Office of Foreign Economic Research.

[FR Doc. 79-20307 Filed 7-5-79; 8:45 am]

BILLING CODE 4510-28-M

NATIONAL COMMISSION ON AIR QUALITY

Final Plan of Study

Printed below is the final Plan of Study of the National Commission on Air Quality. The Plan, adopted by the Commission on June 22, 1979, at a public meeting in Washington, D.C., outlines the Commission's approach to fulfilling its mandate under Section 323 of the Clean Air Act. That Section directs the Commission to analyze alternative approaches to meeting the purposes of the Act and to report back to Congress on how best to meet the nation's air quality goals.

The Commission's draft plan was published in the Federal Register on May 9, 1979, at page 27271. The Commission received 53 written and oral comments during the period of May 9 to June 8 from a variety of interests.

In general, the comments received were positive and supportive of the overall goals of the Commission as reflected in the Plan of Study. A brief summary of the comments is provided below, organized according to the portion of the Plan of Study to which they apply. A brief discussion of the Commission's disposition of these comments also is provided.

Under Part I, many commenters urged the Commission to investigate procedures for setting, and definitions used in setting, National Ambient Air Quality Standards. Some commenters urged the Commission to examine

current National Ambient Air Quality Standards (NAAQS) and suggest whether the current standard for each criteria pollutant is proper or determine the proper level. As stated in Part I, the Commission does plan to assess standard setting processes and definitions, but time and resource limitations prclude reformulation of standards.

Numerous commenters focused on Part II, which includes the analysis of policy for attainment areas and the concept of prevention of significant deterioration of air quality. Comments ranged from an interest in an investigation of PSD permitting processes to an expression of the need to analyze the environmental, energy, and economic impacts of PSD. These issues are included in Part II of the Plan of Study.

Modifications to Part II resulting from the public comment period include an expansion of the discussion of the air quality modeling panel, an expansion of the description of general criteria for selection of regions for regional studies, and uses of these studies.

In addition, a study of permitting processes required by the Act was added to this part of the Plan. In this study, the Commission will examine the emission limitations contained in the permits issued, address the uniformity or consistency among permit programs, and examine time periods required for obtaining permits.

Most of the comments received were directed toward Part III of the Plan of Study, which includes an analysis of the nonattainment and emission offset policies. Most commenters urged the Commission to investigate alternatives to the concept of nonattainment or to develop alternatives to the offsets approach developed by the Environmental Protection Agency. NCAQ is planning to review nonattainment and offset policies in the regional studies under Part III. As an integral part of these studies, NCAQ will develop and evaluate alternatives. The discussion of regional studies in this part has been expanded from the draft Plan of Study to provide a more complete description of those studies.

Few persons commented on Part IV of the draft Plan. Commenters on that Part focused primarily on the need for Inspection/Maintenance (I/M) programs, and on the need for control of emissions of nitrgen oxides (NO_x) from vehicles versus NO_x emissions from stationary sources. The study of NO_x in Part IV of the Plan contemplates examining NO_x emissions from mobile sources and the relationship of these emissions to attainment of the primary and secondary photochemical oxidant standards and the short-term NO_x standard, which is to be proposed by EPA.

The issue of I/M programs will be addressed as part of regional nonattainment studies in Part III and through the study adopted by an amendment offered by Chairman Hart to the Plan which was approved at the June 22, 1979, Commission meeting. This study will examine several types of I/M programs to determine their effectiveness in reducing emissions from in-use vehicles.

Comments on Part V were general in nature and warned against potential pitfalls of cost/benefit analysis, especially attempts to quantify qualitative benefits derived from air pollution control. NCAQ recognizes potential problems inherent in attempting to advance the state of the art of cost/benefit analysis. Much of the Commission's early work in this area will involve analysis of shortcomings of existing techniques for the quantification of costs and benefits. The Commission also will attempt to devise methodologies which may be more advanced that those used in the past.

The industry studies outlines in Part VI were supported by industrial groups which commented on the draft Plan of Study. Some industry gourps responding nominated themselves for further study. The Plan of Study does not specify industries for study. The Commission will take these suggestions into consideration in the selection process.

Commenters on Part VII of the Plan supported studies of the following issues:

- Public participation in SIP development;
- Consultation among Federal, State and local government agencies;
- Coordination of planning efforts on all levels, and
- Reform of procedures and regulations.

These issues are addressed in studies set forth in Part VII.

Many commenters on Part VII suggested that the Commission review existing monitoring networks and monitoring techniques. As a result of public comments, the Commission added language to Part VII to incorporate an evaluation of the adequacy of existing monitoring networks. However, the Commission does not plan to evaluate monitoring instrumentation currently used to measure pollutant loadings.

Some commenters expressed concern over the impacts of the Act on development of control technologies. They mentioned both technology-forcing aspects of the Act and the potential for stifling technology. The Commission agrees that the impacts of the Act on development of control technologies is an important issue to be studied. Language added to Part VII of the Plan includes this.

Many commenters suggested specific studies which they felt the Commission should undertake. Many of them are mentioned in the Plan; others will be considered as detailed work statements for studies are developed. However, others are beyond the Commission's scope and resources.

Finally, there was a general concern that the limited time and resources of the Commission will not allow accomplishment of the goals set forth in the Plan of Study. As a result of limited resources, several respondents encouraged an extension of the Commission's mandate. Many commenters encouraged the establishment of priorities among the issues addressed in the Plan.

The Plan of Study was written with the assumption of a one-year extension to allow the Commission to report to Congress in 1981. Priorities for work will be established as a part of the budget process to be considered by the Commission at its August 1979 meeting. However, two additional points should be made on the issue of priorities and budgets. First, the Plan of Study reflects an initial screening of issues to be addressed by the Commission; those issues not included in the Plan of Study will not be addressed by the Commission. Secondly, there is no direct relationship between priorities and budget allocations. For example, a high-priority study may be far less expensive to undertake than is a study with lower priority.

At the June 22 Commission meeting, Commissioners approved four amendments proposed by individual Commission members.

The first amendment is designed to ensure that Part I of the Plan focus on the process and criteria used in establishing ambient air quality standards and address the problem of the need for an investigation of research to eliminate delays in establishing and re-evaluating standards. Additional language added to Part I effects this change.

A second amendment added to Part IV an investigation of alternative ways to reduce emissions from in-use vehicles. As a result of this amendment, the study of the effectiveness of I/M

programs discussed above was added to Part IV.

An amendment to Part VII of the Plan replaced the study of the relationships of federal, state, and local planning with an analysis of the effects of regulatory and procedural requirements promulgated under the Act. This analysis will be directed at ways to simplify and improve the regulations and procedures. The relationship of federal, state, and local planning efforts will be addressed as part of the regional studies in Parts II and III and in other studies to be conducted under Part VII of the Plan.

The fourth amendment made explicit that the NCAQ will study alternatives to the internal combustion engine and the relative impacts of these alternatives. Language was added to Part IV to add this subject to the issues to be addressed in Part IV of the Plan.

The plan as amended by the Commission was unanimously adopted as amended at the June 22 meeting. The text of the Plan adopted by the Commission is published below.

National Commission on Air Quality,
William H. Lewis, Jr.,
Director.

Plan of Study

Introduction

Congress established the National Commission on Air Quality in 1977 when it substantially amended the Federal Clean Air Act of 1970. Section 323 of the Act prescribes a number of studies for the Commission to carry out and gives the Commission a broad mandate to evaluate the Act in a comprehensive fashion.

The Commission is to conduct its review in light of the purposes of the 1970 Act and the 1977 Amendments. Those purposes, as stated in Section 101(b)(1), are "to protect and enhance the quality of the Nation's air resources so as to promote the public health and welfare and the productive capacity of its population."

This Plan of Study divides the issues to be addressed in generally the same way as the provisions appear in the Clean Air Act. The Commission's study, however, will not be limited to considering the merits of existing provisions. In addition, the Commission will evaluate alternatives for achieving the goals of the Act in a fundamentally different manner. As alternatives are evaluated a major focus will be on simplifying the requirements contained in the present Act to the maximum extent possible consistent with the goals of the Act. These alternatives will be addressed throughout the Plan and will be summarized in Part VIII—Review and Analysis of Alternative Approaches to Air Pollution Control.

In general, the Act provides for controlling pollutants for which ambient air quality standards have been established. The establishment of these standards and the means of attaining or assuring that these standards are not exceeded are the cornerstones of the Act. Part I of the Plan—Analysis of National Ambient Air Quality Standards—will analyze these standards and the way they are established. This Part also will examine the need for controlling currently unregulated pollutants.

The Act imposes requirements for control of regulated pollutants under separate but related general headings: Prevention of Significant Deterioration of Air Quality; Plan Requirements for Non-Attainment Areas; Emission Standards for Moving Sources; Standards of Performance for New Stationary Sources; and National Emission Standards for Hazardous Air Pollutants. The Commission will study in detail the first three of these requirements and alternatives to them in Part II—Review and Analysis of Policy for Areas Attaining Standards; Part III—Review and Analysis of Policy for Non-Attainment Areas; and Part IV—Review of Vehicle Emission Standards. Part VI of the Plan of Study—The Impact of Air Pollution Abatement Activities on Selected Industries will examine the overall impact of all these requirements and the alternatives developed on specific industries.

In addition to directing a review of the key programmatic elements of the Act's requirements, Congress directed the Commission to study certain economic impacts and to review institutional arrangements and scientific research needed to implement the Act. Part V—Costs and Benefits Associated with Air Pollution Control and Part VII—Review and Analysis of Institutional Relationships and Research Programs will address these issues.

Congress also required the Commission to examine the effects of the Act on energy supplies and consumption and to address questions relating to enforcement of air pollution control laws. Because energy and enforcement issues are involved throughout the air pollution control program, the study will deal with these subjects in each appropriate Part.

Each part of the Plan consists of a discussion of issues to be studied by the Commission and a general description of the methodology to be used in studying them. The Commission will draw heavily from studies performed and data collected by government agencies, research organizations, and private groups. The Commission will critically analyze the assumptions, methodology, and findings of these studies. The Commission will supplement these studies as necessary, and incorporate relevant information into its final report.

Because of limited time, many studies will be conducted simultaneously rather than sequentially. In a number of cases, however, studies completed early in the Commission's life will provide data and conclusions for studies to be completed later. For example, the information obtained from the oxidant and modelling panels discussed in Parts I and II below will be used in the regional studies in Parts II and III. Additional detail on how this approach will be used is provided in the discussions of methodology.

The Commission will establish a program to ensure broad public participation and will seek comments from the public at all stages of the program, including the development of its reports to Congress.

In fully involving all sectors of the public in its work, the Commission plans not only a public information program but also an active public involvement or public participation program. Through meetings, hearings, workshops, and briefings—both formal and informal, both in Washington, D.C., and throughout the country—the Commission will assure that groups interested in air pollution control issues have abundant opportunity to be involved in Commission activities.

The Commission will develop a detailed public participation/public information work plan which will emphasize that its approach is one in which the Commission not only informs the public of its own activities but also *listens* to the public's experiences and applies that information to the overall study.

This Plan of Study is the initial step on a process which will lead to the development of specific study programs in each of the eight general areas described above. The final Commission approval of this Plan will be followed immediately by a period of intensive research of available information and literature. The information gathering effort will enable the Commission to define more fully the extent of research efforts which are necessary for each subject area. Based upon this review the Commission will prepare a budget that will indicate the amount of funds to be

allocated for the studies in each of the subject areas. After approval of the budget, the Commission will begin preparation of the detailed work statements for studies in each of the areas.

The Commission has prepared an eight-feet by four-feet flow chart to graphically illustrate the interrelationships and sequences of the various parts of the Plan of Study. This chart is available for inspection at the Commission's offices at 499 South Capitol Street, S.W., Washington, D.C.

Upon the completion of all studies and review of public comments on the studies and draft reports, the Commission will develop appropriate reports and recommendations.

I. Analysis of National Ambient Air Quality Standards

A. *Issues to be Addressed.*

The establishment of National Ambient Air Quality Standards (NAAQS), which must be attained by a specified date, is a fundamental requirement of the present statutory framework. Pursuant to the Clean Air Act of 1970, the Environmental Protection Agency adopted national primary and secondary ambient air quality standards for sulfur oxides, total suspended particulates, carbon monoxide, photochemical oxidants, hydrocarbons, and oxides of nitrogen. In response to a court decision that the agency must adopt a standard once it determines that a pollutant coming from numerous sources causes adverse health effects, EPA also has adopted primary and secondary standards for lead.

Congress in the 1977 Clean Air Act Amendments directed EPA to establish an independent scientific committee to review the air quality criteria and ambient standards no later than December 31, 1980, and thereafter at intervals of not more than five years. Congress also provided that the EPA review can take place more often than every five years, and said the standards should be revised whenever the information justifies revision.

In the 1977 Amendments, Congress directed EPA to adopt a short-term (maxium three-hour) standard for oxides of nitrogen within a year of enactment of the amendments unless the EPA Administrator finds no such standard "is requisite to protect public health."

In addition, Congress amended Section 122(a) of the Clean Air Act to require EPA to investigate the need for setting ambient standards for radioactive pollutants, cadmium, arsenic, and polycyclic organic matter. If the EPA Administrator determines that any of those substances may endanger public health, then ambient standards, emission standards for hazardous pollutants, or new source performance standards must be adopted for them within one year of enactment, except for radioactive pollutants, for which the standards are to be adopted within two years of enactment.

The Commission will focus its activities on the process for, and the criteria used in, establishing ambient air quality standards. Special attention will be given to examining the adequacy of the resources available for the identification and evaluation of the effects of pollutants on public health and welfare, and to the adequacy of the present air pollution research organization to attract and encourage staffing capable of producing the highest caliber scientific basis for air quality standards. Studies will attempt to examine both the policy and physical phenomena related to standard setting. Several issues are particularly relevant to this area of study:

- A review of the practices used by EPA in preparing criteria documents and establishing NAAQS and practices which might be substituted for or added to existing ones
- An analysis of criteria considered in establishing NAAQS, including margin of safety, identification of susceptible segments of the population, distinctions among health effects for the purpose of assessing severity, duration, and reversibility, synergistic effects of pollutants, and secondary effects such as acid rainfall
- Scientific and medical bases for NAAQS
- The relationship between hydrocarbons and oxides of nitrogen in the formation of photochemical oxidants
- The necessity to develop a standard for fine particulate matter as a replacement for or in addition to the total suspended particulates (TSP) standard
- The consideration of fugitive dust in the establishment of particulate standards
- The need for a separate NAAQS for carbon monoxide at high altitudes
- The need for additional resources for research, or reorganization of the research effort, or both, to eliminate the delays in setting promised or mandated standards experienced under both the 1970 and 1977 Acts.

In addition to an examination of existing standards, the Commission will study the desirability of developing ambient or other standards for currently unregulated pollutants including pollutants resulting from chemical changes in the atmosphere (secondary pollutants).

B. *Methodology.*

The Commission's study in this area will consist primarily of an examination of the processes used by EPA in establishing NAAQS. The Commission will perform a preliminary literature search for each of the existing criteria pollutants and compile a list of candidate substances for further investigation to determine whether a NAAQS or other regulatory approach is required. The Commission also will establish a review panel to examine the relationship of hydrocarbons and oxides of nitrogen in the formation of photochemical oxidants.

The panel is not intended to develop the ultimate answers to all questions relating to photochemical oxidant formation. Rather, it is to provide the Commission with the most up-to-date scientific approach for use in its studies of oxidants, and clarify some of the considerable uncertainties which surround this subject. In addition, the panel should recommend what additional data and research are necessary to provide further understanding of atmospheric formation of photochemical oxidant. The panel will consist of 10–12 experts in the field selected by the Commission. The Commission will solicit names of candidates from the public through a notice in the Federal Register and from the candidates submitted will select the members of the panels. The specific questions to be addressed by the panel are: whether and how much one or both precursors of oxidant (hydrocarbons and oxides of nitrogen) must be controlled to attain the NAAQS for oxidant; whether the precursor to be controlled varies for different parts of the country; and, what are the most appropriate model(s) and assumptions to be used in the non-attainment studies in Part III. The review panel will be charged with developing within 90 days an approach to these issues by means of at least two intensive 3–4 day sessions where data and views can be presented in an uninterrupted manner. The conclusions of this panel will be necessary in order to complete the non-attainment studies in Part III and the NO_x control study in Part IV.

Upon completing the preliminary literature search, the Commission will examine the criteria and procedures used in establishing current and proposed NAAQS, candidate substances, and relevant studies by the National Academy of Sciences and public and private sector groups. In the examination of the criteria and procedures used in establishing NAAQS, the Commission will look at each of the standards established by EPA and will compare the definitions, criteria and procedures used in their

development of them. This examination will provide a basis for identification of alternative criteria for issues such as: definition of margin of safety; identification of susceptible populations; distinctions among various health effects including reversibility, severity and duration. The Commission will identify information necessary to set standards based upon these alternatives. In each case the Commission will determine to the extent possible the consequences of each alternative approach.

The Commission will review relevant scientific studies and data on health effects of fine particles and high altitude effects of carbon monoxide. In addition relevant data on candidate substances will be examined and recommendations will be developed on the most appropriate manner of treating each substance; e.g., establishment of a new source performance standard *or* no regulation.

The information developed from these studies will be the basis for recommendations by the Commission regarding the standard setting procedure, the need for refinement of certain standards, and the need, if any, for additional substances to be the subject of NAAQS or other standard setting. The research also will be used in other studies; for example, the attainment and non-attainment studies. The special studies on unregulated pollutants and high altitude CO emissions will be used in examining standards for motor vehicle emissions and their health effects.

II. Review and Analysis of Policy for Areas Attaining Standards

A. *Issues to be Addressed.*

Congress in the Clean Air Act of 1970 directed the Environmental Protection Agency to establish national ambient air quality standards and gave states primary responsibility for attainment and maintenance of both primary and secondary standards.

While directing that areas exceeding the standards reduce emissions to meet the standards, the Act did not specify requirements for areas of the country in which air quality was cleaner than required by the ambient standards. The issue raised in subsequent litigation was whether EPA could approve state implementation plans which did not prevent "clean air" areas from becoming "dirtier" up to the national standards.

With the courts ultimately determining that EPA could not approve such plans, EPA in November 1972 notified states that it would disapprove state implementation plans which did not provide for the prevention of significant deterioration of air quality (PSD). EPA's December 1974 PSD regulations were incorporated into SIPs under Section 110(c) of the Clean Air Act.

EPA's regulations established three classes with numerical "increments" specifying additional allowable pollution levels for sulfur dioxide and particulates. Class I allowed very minor additional pollution, Class II moderate additional pollution, and Class III additional pollution up to the NAAQS.

The PSD regulations were to be enforced through a preconstruction and premodification permit program applicable to 19 specified industries. Permits for sources in those industries could not be approved unless the sources would not exceed the applicable increments and unless they used best available control technology (BACT).

In its 1977 Clean Air Act Amendments, Congress affirmed the PSD concept and extended its application. In those Amendments, Congress mandated that EPA adopt PSD regulations for other criteria pollutants by August 1979. Within 21 months of promulgation of those regulations, state implementation plans are to be submitted to EPA and approved or disapproved in the succeeding four months.

Congress in the 1977 Amendments also expanded from 19 to 28 the number of source categories specified to be covered by the PSD regulations. It said "major stationary sources" within those 28 industries with the potential to emit 100 tons or more per year of pollutants would be covered by the regulations. The coverage would extend also to those sources with the potential to emit or increase emissions by 100 tons or more per year of any pollutant or any regulated under new source performance standards, national emission standards for hazardous air pollutants, or those regulated under the mobile source control title of the Act.

Beyond the 28 specified industries, other sources with the potential to emit 250 tons or more per year of any pollutant also would be covered.

The law specified that, except for certain federal lands, all areas initially would be classified as Class II and could be redesignated by states, Indian tribes, and federal land managers.

The Commission in this research will focus on issues related to the prevention of significant deterioration provisions of the Clean Air Act, with particular attention being given to values intended to be protected by those provisions and to impacts of PSD on source location and size, employment and regional economic growth. The Commission also will address questions relating to uniform implementation and enforcement of existing requirements of the Act and will consider alternative techniques for accomplishing the goals of PSD. Of particular interest will be the enforceability of alternative techniques.

In examining PSD and its impacts, the Commission will address a number of significant issues. These include:

- The appropriateness of the increments of additional pollution permitted by the Act in preventing significant deterioration of air quality in Class I, II and III regions;
- Alternative techniques, for example the use of standards in lieu of increments and the use of nonregulatory alternatives to PSD and the enforceability of such approaches;
- The allocation of PSD increments within a state and in interstate areas, particularly in areas with significant existing or potential energy development and generation;
- Whether existing PSD requirements affect the size and location of major sources and the effectiveness and appropriateness of existing siting requirements;
- Whether exclusion of non-major sources will affect the ability of major sources to meet existing increments;
- The reliability of existing modelling techniques and possible alternatives for PSD review, and the extent to which modelling should serve as a basis for approval of PSD permits;
- The desirability of including pollutants other than sulfur dioxide and particulates in PSD review including an analysis of approaches which may be used for these pollutants;
- Whether technology is available to permit projected economic growth without exceeding increments contained in the Act, and the cost of such technology;
- Best available control technology requirements;
- The adequacy of the existing methods for designation of lands of special national interest and of methods to add or delete such lands from Class I designation;
- The impact of the visibility provisions in the Act on future economic development, including industrial growth and tourism.

B. *Methodology.*

The Commission will develop the information necessary to address these issues through studies of selected air quality regions. Separate studies will focus on modelling, alternative designation techniques, inclusion of additional pollutants, and visibility.

The Commission will review existing literature which addresses these questions and on the basis of this search will develop a detailed study methodology. At the same time, the Commission will establish a modelling review panel. This panel, similar in composition and purpose to the photochemical oxidant panel, will have the following responsibilities: Review

existing modelling techniques and assumptions taking into account the effects of variations in climate, meteorology, terrain, and other localized effects; recommend model(s) to be used by the Commission in its studies of TSP and SO_2 for both level and rough terrain; and, examine the level of reliance which should be placed on modelling in permitting and other decisionmaking under the Act. The selection process for this panel will be similar to that described for the oxidant panel, above. The panel will be charged with making recommendations to the Commission within 90 days of its establishment. These recommendations will be considered by the Commission for use in the regional studies in this part and in Part III, and also for use in developing policy recommendations on modelling.

The Commission during this time will begin a study to examine the appropriateness of the existing increments of additional pollution permitted by the Act. In this study, the Commission will focus on whether the existing increments are appropriate to protect areas designated as Class I, II and III from significant deterioration of air quality. The Commission will use results of the study to assess costs and benefits associated with the existing increments as compared to the alternative increment levels to be examined in the regional studies.

The Commission concurrently will select regions for study of the issues discussed above. Although these studies will be designed to be comprehensive, the Commission recognizes that local situations for all portions of the country cannot be addressed in these studies. However, the Commission believes that the in-depth evaluation contemplated in these studies will provide a sound basis for evaluation of current and alternative policies.

The Commission may select up to four regions for in-depth analysis depending upon the level of funding available to the Commission. Among the factors to be considered in selecting the regions are: representativeness of the type of area (urban, rural, climate, topography, etc.); industry growth projections including energy generation or development plans; institutional relationships; and, the adequacy of emission inventories. Another very important factor will be whether the region is classified non-attainment for other pollutants. The Commission will attempt to select regions for study which will provide the Commission with a representative range of impacts of Clean Air Act requirements. In this way, the maximum amount of information can be developed within the limited resources available to the Commission.

The regional studies will include the following components:

An examination of control technology and costs necessary for compliance with existing requirements;
The establishment of growth projections;
A review of emission inventory and air quality data from 1979 SIP submissions;
An evaluation of costs of control for existing increments in the region;
An evaluation of regional economic and energy impacts;
The development of alternatives to PSD including alternative increment levels;
An evaluation of costs, enforceability and institutional requirements of alternatives;
A comparison of environmental, economic, energy and technological effects of the current increment approach with the effects under alternatives considered.

The regional studies will be designed and performed in a manner which allows the most complete evaluation of existing requirements and impacts arising from these requirements, and also an evaluation of alternatives and their impacts. The methodology and analytical approach for all of these studies will be the same to assure consistent results.

When regions are selected for study the Commission will establish ad hoc information groups composed of local government, business and citizen representatives for each region. These groups will provide data and help involve local officials to ensure that the analysis uses the most accurate information available. Existing emission inventories and to the extent available monitoring data will serve as the basis for the calculation of the current baseline emission levels. Alternative growth projections will be developed and reviewed for reasonableness by the ad hoc information group. These projections then will be analyzed to determine whether the anticipated growth can occur under existing PSD increments and procedures. The analysis will cover the years 1981–1995. The baseline and growth projections will also be analyzed and compared to alternative classifications under the existing PSD program.

Concurrently with the determination of baseline emission levels and air quality, a comprehensive set of alternatives to PSD will be developed for use in all regional studies. The Commission will seek the participation of the public in the development of these alternatives. Each of the alternatives will be examined for its enforceability and impact on institutional relationships. The analysis described above will be repeated for each alternative approach selected.

These analyses will be designed to provide the following types of information for comparison purposes:

Relative impacts on air quality;
Impacts on ability to meet energy needs;
Technological and financial capacity to meet existing and alternative requirements;
Impact on siting requirements and resulting impact on regional development.

When the regional studies are being conducted, the Commission will examine the issues of designation methods, visibility requirements, and the desirability of including additional pollutants in PSD review. In the study of additional pollutants, the Commission will attempt to identify the types and relative magnitude of costs and benefits associated with including other pollutants in PSD review. This effort will include an examination of approaches which may be used to regulate such pollutants. In the study of visibility, the Commission will attempt to measure effects of the Act's provisions on regional economic development, including industrial growth and tourism, and the Act's effectiveness in protecting visibility in scenic areas. In the designation study, the Commission will examine existing procedures for designating Class I or Class III areas to determine their efficacy in preventing deterioration of air quality while permitting economic growth. The Commission in this study will work closely with the Department of the Interior and state and local officials in affected areas.

An early and on-going activity of the Commission will be a study of new source permits applied for since the enactment of the 1977 Amendments. This study is intended to provide information for several parts of the overall study. New source permit applications submitted to EPA will be examined to determine; the designation status of the area; the length of time from submission to issuance, or the length of pendency of the application if a permit has not been issued; the reasons for delay in issuing and denial of permits; the level of control required of the source; and inconsistencies among permitting agencies. This information will be used to help examine the issues surrounding BACT in this part of the study, and LAER in Part III. In addition, the pendency time will be used in serveral parts of the study to determine impacts on costs, siting and institutional issues, and to address the feasibility of consolidated permitting.

Results of the regional, increment evaluation, pollutant addition, visibility designation and permit studies will form the basis for the Commission's recommendations on the issue of PSD policies for attainment areas. These findings also will provide valuable data for the industry and institutional relationship studies described below.

III. Review and Analysis of Policy for Non-Attainment Areas

A. *Issues to be Addressed*

The Clean Air Act of 1970 required states to attain primary national ambient air quality standards by May 31, 1975, with extensions possible for some areas to mid-1977. Secondary standards were to be attained within a "reasonable time," and most state implementation plans defined that to be the same as the primary standard attainment date.

By the May 31, 1975 date, however, the Environmental Protection Agency reported that 160 of 247 air quality control regions still had monitored violations. Lacking congressional guidance on the consequences for states failing to achieve the standards by deadline, EPA adopted its own strategy for allowing new growth in non-attainment areas.

On December 21, 1976, EPA published an interpretive ruling on its preconstruction review regulations establishing what has become known as the "emissions offset" ruling. As amended in 1977, the Clean Air Act largely ratifies until July 1, 1979, EPA's interpretive ruling. After July 1, 1979, the ruling is to be replaced by revising state implementation plans (SIPs).

The revised SIPs must provide for annual emission reductions from existing sources, an emission inventory for all non-attainment areas, a growth allowance, and detailed permit requirements for new major sources. The SIPs must demonstrate that primary NAAQS attainment will be accomplished by December 31, 1982, except for oxidants and carbon monoxide for which, upon the making of a special showing, deadlines can be extended until December 31, 1987.

The plans also must detail the amount of new growth permissible and require that new sources achieve the lowest achievable emission rate (LAER), which is defined as the most stringent emission limitation in the state implementation plan of any state for that class or category of source or the most stringent emission limitation actually achieved in practice, whichever is more stringent.

The state implementation plans must require also that existing sources use reasonably available control technology so that annual reductions in emissions will lead to attainment of the applicable NAAQS by the specified attainment date.

The Commission will assess the existing statutory requirements for areas not attaining ambient standards for their effectiveness in achieving the goals intended by Congress and for their effects on environmental health, energy development, employment and economic growth. The pollutants considered in this analysis will be sulfur dioxide, particulates, and photochemical oxidants. The Commission will examine several subsidiary issues as part of the overall non-attainment issue. These include:

- The effectiveness of the offset/new source review provisions and alternatives to those provisions (e.g., emission taxes, emission "auctions," other market approaches to allocating emissions and other emission allocation procedures), and the enforceability of the alternatives;
- The effectiveness and appropriateness of existing siting requirements other than the offset provisions;
- The impact of interregional and interstate transport and background levels of photochemical oxidants on non-attainment control requirements (only in oxidants study);
- The availability of offset sources within regions;
- Whether the most cost-effective controls are being included in SIPs;
- The need for Inspection and Maintenance (I/M) Programs in photochemical oxidant non-attainment areas;
- The availability, effectiveness and costs of transportation controls for attaining or maintaining standards, including analysis of alternative policy instruments for achieving reductions of emissions from transportation systems; e.g., incentives/disincentives through federal transportation funding mechanisms and energy and economic impacts of these alternative funding approaches (only in oxidants study);
- The effectiveness and uniformity of state and federal enforcement activities;
- The use of alternative control schemes (e.g., increased emphasis on controlling mobile rather than stationary source emissions or vice versa) and resultant enforcement impacts;
- The ability of states to attain standards by deadlines in the Act;
- Consideration of the definitions of reasonably available control technology (RACT) and lowest achievable emission rate (LAER);
- Special probles of small businesses and government agencies in obtaining emission offsets.

B. *Methodology.*

The Commission's research on non-attainment will be quite similar in approach to its studies of attainment areas. Except for the study on special problems of small businesses and government agencies in obtaining emission offsets, much of the data will be collected through regional studies. Once again the Commission recognizes the limitations of such an approach because the number of regions studied will not approach the number of non-attainment areas. However, the analysis contemplated in these studies will provide as sound a basis as is possible consistent with time and resource constraints, to evaluate existing and alternative policies.

The Commission will undertake an extensive literature search and upon completion will select regions to be studied. Considerations in the selection of regions will be similar to those discussed in the attainment areas study. The Commission will seek regions which may be attainment for some pollutants and non-attainment for others in order to assure examination of the broadest range of impacts. Also, the Commission will establish ad hoc information groups such as those described in the attainment area study.

Concurrently with the establishment of regional information groups, the Commission will prepare detailed work statements for these studies. The methodology for each will be the same to ensure that the results can be properly compared. Up to four regions for each pollutant will be selected for study depending on the level of funding available to the Commission. As with the attainment studies, these will use existing reports to the maximum extent possible. Also, the work done by the photochemical oxidants review panel and the modelling review panel will be used in these studies.

The content of the regional studies will be quite similar to the studies outlined the PSD/attainment area discussion, above. However, because of several significant differences in content, the basic elements of these regional studies also are listed; these include:

- An examination of control technology and costs;
- The establishment of regional growth projections;
- A review of emission inventory and air quality data derived from 1979 SIP submission;
- An evaluation of the way background levels and transport of oxidants affect development and implementation of control strategies (performed only in oxidant non-attainment studies);
- The identification of alternative control strategies;
- An evaluation of economic, technology, compliance time and health impacts of

alternative strategies and alternative NAAQS levels (from NAAQS review studies);
The development of alternative aproaches to offset/new source review policy;
An evaluation of costs, economic development, enforceability and institutional requirements of alternative approaches;
A comparison of offset/new source review procedures to alternative approaches.

The regional studies conducted under this Part of the Plan will be designed to assure a thorough examination of existing requirements and alternatives to these requirements. Each regional study will use the 1979 SIP submission as the basis for emission inventories and control strategies. For oxidant studies, assumptions will be made for measures to be required in the post 1982 period. These will be made in conjunction with local officials and the ad hoc information committee. The emission inventory and monitoring data will be examined to determine its accuracy, and improvements will be made where they are necessary. Next, alternative growth projections will be developed and analyzed. The ad hoc information group for the region will play an important role in helping to determine the reasonableness of these projections. Using the inventory of existing sources and alternative growth projections, an analysis will be performed of the existing SIP requirements (including an analysis of offset or other mechanism contained in the SIP). This analysis will be designed to provide information on air quality levels for 1982, 1987 and 1995. These can then be compared to existing and alternative standards. The analysis of existing SIP requirements will also provide a basis for determining economic and energy impacts of these requirements, and basis for comparison with alternative requirements.

Concurrently with the evaluation of the emission inventory and growth projections, alternatives to offset requirements will be developed for use in all regional studies. As stated above, each of the alternatives developed for use in the regional studies will be evaluated for their enforceability and impact on institutional relationships.

The existing SIP control requirements together with each of the alternatives to the offset requirements will then be separately analyzed to determine air quality levels in 1982, 1987 and 1995 under each of these approaches. In addition, alternative control requirements (e.g., I/M or no I/M; transportation controls or no such controls; stricter levels of control of mobile sources or stationary sources or both; control of currently unregulated sources) will be developed and analyzed together with the offset requirements and each of the alternative approaches to offset. These analyses will allow comparisons of air quality, energy and economic impacts to be made among existing requirements, alternatives to offset, and alternative control strategies. These can provide specific information on:

The impact of alternatives on energy development and consumption;
The ability to attain NAAQS;
The dates by which NAAQS can be attained;
The technological and financial impacts;
The impacts on siting and resulting impacts on regional development.

The study of problems encountered by small businesses and governmental agencies in obtaining offsets will proceed while the regional and industry studies are in progress. The Commission will examine the extent of problems and identify possible means of eliminating them (if serious problems exist). In addition, the Commission will evaluate the impact of alternative approaches to non-attainment developed as a part of the regional studies.

The permit study described in Part II will be used to examine the definition of LAER and to obtain information on technology, emission reductions and costs for the regional analyses.

Results of the regional studies and of the small business study will form the basis of the Commission's recommendations on policies and strategies to attain ambient air quality standards in present non-attainment areas. They also will provide data for studies conducted in the Institutional Relationship and Selected Industry portions of the Commission's Plan of Study. Varying mobile and stationary source control options also will be useful to the Vehicle Emission Standards Study.

IV. Review of Vehicle Emission Standards

A. *Issues To Be Addressed.*

Congress in 1965 noted that "the problem of motor vehicle pollution is growing," and said that photochemical smog "is appearing with increasing frequency and severity in metropolitan areas throughout the nation." The Senate that year said it was convinced that "manufacturers have the capability of incorporating air pollution reduction facilities in their vehicles" for hydrocarbons and carbon monoxide, but it said "further research is needed to determine effects of automobile pollutants other than hydrocarbons and carbon monoxide and to find means of controlling them."

In the Motor Vehicle Air Pollution Control Act of 1965, Congress directed the Secretary of the Department of Health, Education and Welfare to "conduct and accelerate research programs" into these and other automobile emission problems. In enacting the 1970 Amendments to the Act, Congress adopted automobile emissions standards for hydrocarbons, carbon monoxide, and oxides of nitrogen.

In the 1977 Clean Air Act Amendments it established interim automobile emission standards for those pollutants for 1978–1979, and 1980, with "final" standards to be achieved by 1981. Under the 1977 Amendments, the 1981 standards call for meeting 0.41 gram per mile for hydrocarbons, 3.40 grams per mile for carbon monoxide (with the possibility of a two-year waiver to 7 grams per mile), and one gram per mile for oxides of nitrogen (with a research goal of 0.4 gram per mile and with an innovative technology or diesel waiver to 1.5 grams per mile).

The 1977 Amendments also require automobile manufacturers to demonstrate to the Environmental Protection Agency Administrator the health and safety impacts of new motor vehicles and engines and of new fuels and fuel additives. EPA is authorized also to prescribe gasoline fill pipe standards for new motor vehicles to assure proper connections with approved vapor recovery systems.

In addition, the 1977 Amendments provide for civil penalties of up to $2,500 for tampering with auto emission controls, and the Amendments require EPA to develop and phase in heavy-duty vehicle emission standards for hydrocarbons, carbon monoxide and, by 1985, for oxides of nitrogen. The heavy-duty vehicle statutory standards require 90 percent hydrocarbon and carbon monoxide emission reductions by 1983 and a 75 percent oxides of nitrogen reduction by 1985.

The Commission will examine the following issues related to vehicle emission standards:

The availability of technology and the economic, energy and environmental effects of achieving required and proposed control levels for NOx emissions;
The effectiveness of existing and proposed control technology for all pollutants, including the problems of deterioration of current technology, tampering and fuel switching;
The need for emission limitations for currently unregulated pollutants;
An analysis of alternatives to the internal combustion engine and the pollution

control fuel economy, and cost implications of such alternatives;
The effectiveness of alternative ways to reduce emissions from in-use vehicles;
The control of vehicle emissions at high altitude.

B. *Methodology.*

The Commission will design these studies to determine the emission standards necessary both to attain and maintain relevant NAAQS and to protect the public from currently unregulated pollutants such as nitrosamines.

In the case of NOx emissions, existing exhaust standards for gasoline and diesel vehicles and alternative levels will be examined to determine benefits of the various limitations in attaining the existing photochemical oxidants standard, and the short-term ambient standard for NO_2 to be proposed by EPA. The Commission also will study the availability and cost of technology to meet more stringent NOx standards.

The Commission will examine the impact of NOx emissions on non-attainment of the photochemical oxidants NAAQS by examining varying vehicle emission levels of NOx in the regional non-attainment studies discussed above and also examining benefits and costs which would result from such controls. The Commission will evaluate the impact of NOx emissions on meeting the proposed short-term NO_2 NAAQS by determining the effects existing and alternative emission levels would have on attainment in a non-attainment area. In examining alternative NOx emission standards, the Commission will estimate fuel economy impacts of various alternatives.

Finally, as a part of the NOx study, the Commission will assess the potential NOx reductions obtainable with an I/M program and consider which type of test for the NOx may be best suited for I/M programs.

In the study of control technology, the Commission will examine questions related to equipment currently in use, and will examine the impact that anticipated control technology or alternative engine designs may have on these questions. The Commission will review catalyst technology to determine how much catalytic converters deteriorate in in-use vehicles. In addition, the Commission will determine the extent to which tampering with other engine components and fuel switching reduce the control obtained from these devices. The Commission then will assess anticipated control technology and alternative engine systems to determine their effects on these issues and will attempt to identify potential areas of concern with these technologies.

The Commission will examine several types of I/M programs to determine their effectiveness in reducing emissions from in-use vehicles. This study will examine both idle and loaded tests, various pass-fail levels for CO and HC, and other programs such as mandatory maintenance, and component examinations. This study will examine each type of program both for present technology vehicles as well as for technology anticipated in the post-1981 period. As mentioned in Part III above, the regional nonattainment studies for photochemical oxidant will include an analysis of ambient levels both with and without an I/M program.

The Commission will study the control of CO by examining benefits and costs of existing and alternative emission levels both at sea level and at high altitude. The Commission will examine the impact of different CO limitations by analyzing three typical non-attainment locations for CO: an urban central business district at sea level; a major suburban shopping plaza at sea level; and a business district with heavy traffic at high altitude. Each of these conditions will be examined assuming both the existence and the absence of an I/M program.

In each case, the Commission will examine existing and alternative CO emission limitations to determine effects they have on attainment of NAAQS. The Commission also will address the impact of the alternative emission levels on fuel economy at sea level and at high altitude in light of findings in the NAAQS study regarding the need for a high-altitude CO NAAQS.

Currently unregulated pollutants from vehicles, specifically including diesel-powered vehicles, will be examined in light of the study of regulated and unregulated pollutants in the NAAQS study described above. The Commission will determine emission levels of these pollutants by examining data from manufacturers and control agencies. This study will focus on determining what contribution unregulated vehicular emissions make to the overall emissions of substances of particular concern and also the extent to which current and anticipated emissions will present a health or other environmental problem.

In its vehicle emission studies, the Commission will explore the adequacy of some of the most debated areas of the 1977 Clean Air Act Amendments. In addition to forming an integral part of the Commission's final report to Congress, the results will provide data for the cost-benefit, institutional relationship and alternative analysis portions of the Plan of Study.

V. Costs and Benefits Associated With Air Pollution Control

A. *Issues to be Addressed.*

The Clean Air Act currently contains requirements which specifically allow or disallow the examination of costs in making certain decisions. For example, costs must be considered in establishing new source performance standards, but costs cannot be considered in establishing an emission standard for hazardous pollutants. The most cost-effective means of attaining standards is allowed for attainment of NAAQS, but if NAAQS cannot be attained by the use of these means then cost is not to be considered. The Commission will examine both the costs and the benefits of air pollution control generally and also the use of cost-benefit analyses as they apply to air pollution control.

The Commission will examine at a macroeconomic level both the costs and benefits associated with air pollution control. The Commission also will examine cases in which cost/benefit analyses can and should be used in air pollution control activities and cases in which cost/benefit analyses can and should be used in air pollution control activities and cases in which cost/benefit analyses cannot be used. To the extent possible, the Commission will quantify aggregate costs and benefits of past and future controls. Where precise quantification is not possible, the Commission will attempt to provide, where appropriate, a range or estimate based upon the best available methodology.

Examples of the types of costs and benefits to be examined include:

Costs

Capital costs for compliance;
Operation and maintenance costs;
Opportunity costs/foregone investment;
Administrative fees (consultants legal fees);
Control agency budgets;
Decreases in employment in certain industries;
Decreases in plant productivity.

Benefits

Health—Lower health care costs because of fewer adverse health effects of air pollution;
Aesthetic—Increased visibility;
Economic:
Increased worker productivity;
Increased employment in certain industries;
Less damage to structures, materials and property values;
Fewer adverse effects on aesthetics and tourism;
Increases in plant productivity and process modernization as a result of pollution control investment;

Recovery of materials.

Other issues to be examined as part of this analysis include the effects of domestic air pollution control requirements on U.S. industry in international markets and effects on the balance of trade. In addition, with data developed in the regional attainment, non-attainment, vehicle emission and industry studies, the Commission will examine marginal costs associated with the marginal benefits of increasingly stringent control requirements.

B. *Methodology.*

The Commission in its study of these questions will emphasize the assignment of values and quantification of benefits because they are a relatively new and more speculative area of study. The Commission will begin its compilation of these data early in its study through an extensive search of existing literature. The literature search will determine where additional information is necessary in order to attempt to fully quantify, or accurately estimate, a cost or benefit, or to determine where quantification is possible given current valuation techniques.

The literature search will be followed by workshops focussing on current methodology used in assessing costs and benefits. The goals of these workshops are: To identify the major issues involved in the accurate assessment of both costs and benefits; to identify research needs in the assessment process; and to determine a commonly accepted methodology for the assessment of both costs and benefits. This effort will enable the Commission to determine how or where such additional information can be obtained or the type of analyses necessary to develop it. Where the development of gathering of that information will not involve extensive new research, the Commission will attempt to obtain or develop the information. Where major new research is needed, the Commission will identify the type of work to be undertaken.

The Commission also will examine the use of cost-benefit studies in future air pollution control programs at all levels of government. The Commission will examine current practices and determine situations in which they can and cannot reasonably be used. The Commission will use the results of the quantification and valuation analyses discussed above to determine potential additional uses for them in air pollution control activities.

VI. The Impact of Air Pollution Abatement Activities on Selected Industries

A. *Issues to be Addressed.*

The existing statutory requirements for attainment and non-attainment areas, together with requirements for new source performance standards, national emission standards for hazardous pollutants, and visibility requirements create a complex framework within which sources are to operate. In analyzing the attainment and non-attainment parts of the Plan, the Commission will focus on general effects of existing and alternative requirements and will not assess effects on a specific industry. In this portion of its activities the Commission will examine the overall impact of the Act's requirements on specific industries, with high priority being given to energy-related industries, particularly those using coal or affecting coal utilization.

The Commission in this area will examine the following broad subjects:

The effects of existing control requirements on new, modified and existing sources;
The effects of alternative control approaches on new, modified and existing sources.

On the first issue, the Commission will study existing control approaches and assess the abatement technologies necessary, costs, energy consumption, and effects on the environment, employment and economic development. On the second issue, the Commission will examine the effects alternative approaches to PSD and offset/non-attainment review may have on existing sources, and on siting decisions for new or modified sources. In these studies, the Commission will attempt to determine the extent of overlapping requirements for PSD, non-attainment review, new source performance standards and visibility requirements and whether alternative approaches would reduce or increase the amount of any overlap.

B. *Methodology*

The Commission in this research effort will focus on in-depth analyses of selected industries. The Commission first will select candidate industries for study. The Commission will examine those industries which will be affected by the broadest range of requirements contained in the existing Act. It will give top priority to energy-related industries, with particular emphasis on those industries affecting increased coal utilization. Because many studies of major industries have been undertaken by industrial and governmental groups, and because of limited Commission resources, the Commission intends to use studies conducted by others to the greatest possible extent, both in selecting industries and in performing its analysis.

Once the Commission selects the industries, it will make a thorough literature search to examine the studies previously performed on the industries. This approach will enable the Commission to determine what additional data or analyses will be necessary to complete the studies contemplated and to develop a detailed work statement.

While the literature search is being conducted, the Commission will establish an ad hoc information group for each industry selected. These groups will consist of representatives of the industry to be studied, control agencies, and environmental and labor organizations. The groups will provide a flow of communication among the Commission, the industry, and those affected by the industry. These groups will help assure that the Commission and those performing the study for the Commission have the most accurate data possible.

Each industry study will include the following components:

A compilation of the availability of control technology, environmental effects, costs, and energy needs associated with existing SIP requirements;
A cost-effectiveness analysis of various processes and controls;
The performance of air quality modelling to predict impacts relative to the following: existing PSD increments; alternative increments; alternative approaches to PSD; offset/new source non-attainment review; new source performance standards; visibility requirements;
Selection of possible control techniques for existing and alternative requirements;
Assembly of regional and national projections of future new and expanded plants;
Extrapolation nationally of technology availability and costs;
Evaluation of regional and national effects of existing and alternative approaches on economic growth, employment, energy consumption and development and, where appropriate, coal utilization.

The Commission will examine results of these analyses in light of the overall impact each industry has on national and regional air quality, economic development, employment, and energy development, especially the future use of coal. In the studies of industries which utilize coal an analysis will be performed of current and projected emissions of carbon dioxide (CO_2) from sources in that industry, as well as the relationship between coal combustion and radioactive by-products. The

studies will be conducted to allow consideration of effects that current requirements have on plant siting and sizing decisions. In addition, they will examine overall effects on the industry of alternative approaches to existing requirements which will be developed as part of the regional studies of attainment and non-attainment areas.

The Commission will use these studies in conjunction with the regional and new source permit studies discussed above to evaluate the overall effects of existing requirements and alternative control approaches. These studies will provide the Commission with an examination of existing and alternative requirements from an important additional perspective. The analysis will help the Commission develop overall recommendations on attainment, non-attainment and new source review policies and procedures, particularly as they affect energy development and coal utilization.

VII. Review and Analysis of Institutional Relationships and Research Programs

A. *Issues to be Addressed.*

The Commission will focus its attention in this area on the relationships between federal, state, and local governments and the private sector in planning, administering and enforcing the Clean Air Act, and on air pollution-related research activities of government and industry. Specific questions to be addressed include:

- The ability of federal, state, and local governments to implement and enforce existing provisions of the Act, including an examination of available resources, of existing sanction provisions;
- The effects of regulatory and procedural requirements of federal, state, and local programs, and ways to simplify and improve them;
- The adequacy of research, development, and demonstration projects conducted by federal, state, and local governments and private industry;
- The adequacy of air pollution monitoring networks and impacts associated with the presence or absence of adequate monitoring;
- The ability of business to secure the financial resources and train the personnel necessary to assure compliance with the control requirements contained in the Act.

B. *Methodology.*

Early in the course of its study, the Commission will identify the effects of the regulatory and procedural requirements of Federal, state, and local programs under the Act. Examples of issues to be examined include: effects of permitting requirements on new source construction, and the extent of reporting requirements and their relationship to enforcement. At a workshop of affected parties, the Commission will identify the major effects of regulatory and procedural requirements and solicit proposals for appropriate changes in the requirements (without addressing substantive requirements). In evaluating these proposals, the Commission will involve business, government agencies, and public interest groups.

The Commission will study administration and enforcement of existing provisions of the Act by EPA and state and local governments. It will examine statutory authority of state and local agencies, resources available to all levels of government, and the effectiveness in using those resources for planning, surveillance and enforcement. The Commission will emphasize two areas: The proper role of the federal government in the air quality planning process; and implementation of the Act by all levels of government. As part of this study, the Commisson will examine the relationship of air quality planning to other state and local planning activities and, in particular, the role of regional planning organizations. Recommendations for improvements or adjustment of any major differences in planning and enforcement will be developed.

To carry out this study, the Commission will contact officials at all levels of government and industry for views and data. Some of this contact will take place in the regional and industry information group activities which are part of the attainment, non-attainment and industry studies. The views of officials in other regions and industries also will be actively sought. Of particular interest will be the degree of participation by elected and non-elected officials, business and labor officials, and public interest groups in developing the 1979 SIP revisions, and the effects of any sanctions imposed because of EPA non-approval of those plans. The Commission will also examine the Section 175 (Department of Transportation) transportation planning grants to local agencies, the urban demonstration grants made by the Department of Housing and Urban Development, EPA and the Department of Commerce under the President's Urban Policy, and the consultation and coordination processes under Section 174 of the Act.

The Commission will analyze current and projected budgets, personnel levels, and enforcement activity data by reviewing existing SIPs and contacting appropriate officials. Whenever possible, the issues explored in this study will be analyzed in conjunction with the regional studies described earlier in the Plan of Study.

In a second study to be done simultaneously with the one described above, the Commission will examine the air pollution research done by federal, state and local governments and industry. Federal research activities will be carefully scrutinized and evaluated, and several state and local programs will be selected for examination. In addition, the Commission will examine efforts of selected industries and industry groups to further air pollution research activities. In this study, the Commission will determine the adequancy of research programs at each level and recommend possible improvements.

For federal agency analysis, the Commission will draw upon reports in light of recent activities. The Commission will use existing reports and data on state, local and industrial efforts where available, and additional information will be obtained through interviews with appropriate officials.

An important part of the regional attainment and non-attainment studies will be the development of alternative approaches to meeting the goals of PSD and offset/new source review policies. As indicated in the description of those studies, a portion of them will be devoted to examining institutional relationships which would be created by substituting each alternative for the existing approach, as well as the enforceability of each of these measures. Because these factors are critical to determining the viability of these alternatives, Commission personnel who will analyze these issues will not have participated in developing the alternative approaches.

The Commission will conduct a survey of monitoring networks in selected areas of the country to examine the adequacy of these systems. This information will allow the Commission to examine the impacts associated with adequate and inadequate systems. The study will examine both urban and rural areas and will address all pollutants for which NAAQS presently exist. Such a study is important because monitoring provides the quantitative evidence of the degree to which requirements imposed under the Act are achieving NAAQS.

In the study of the ability of industry to achieve requirements contained in the Act, the Commission will use data collected in the regional attainment, non-attainment, industry and cost-benefit studies. The Commisson will examine not only the financial

commitments needed to comply with the Act's requirements and sources of these resources, but also training programs established by industry to assure proper operation and maintenance of pollution control equipment, and proper reporting of information to control agencies.

The institutional relationships, research and monitoring studies will be especially important to almost all other Commission studies. The findings will be applied to these other studies as they are completed to test the practicality of alternative approaches to the 1977 Clean Air Act Amendments and to support final recommendations of the Commission.

VIII. Review and Analysis of Alternative Approaches to Air Pollution Control

A. *Issues to be Addressed.*

Other parts of the Plan provide for developing and evaluating alternatives to the specific area of the Act being considered. These alternatives include economic and other non-regulatory approaches and alternative emission limitations as potential substitutes for existing requirements.

This portion of the study, in addition to compiling and summarizing conclusions about each of the alternatives, will review alternatives transcending specific issues such as attainment or non-attainment, now provided for under the Act. In particular, the Commission will emphasize the study of economic incentives. The Commission also will examine alternatives which would require that pollutants from all media be addressed comprehensively. The Commission in this part of the Plan also will assess the technology-forcing requirements of the Act and examine possible alternative approaches to effectively encourage advances in control technology. Advantages and disadvantages of all alternatives will be considered, and an evaluation made of each approach or combination of approaches.

B. *Methodology.*

The Commission will thoroughly examine each of the studies prepared as part of this Plan of Study. The alternatives discussed in each of these studies will be reviewed both as complete or partial replacements for and as supplements to existing requirements. The Commission will examine the alternatives and advantages and disadvantages of each, and assess whether the overall goals of the Act could be better accomplished by use of one or more alternatives. In this evaluation, the Commission will consider the net effect on air quality and other environmental programs, enforceability, economic impacts, and needed institutional arrangements.

While analyses of these considerations will take place as part of each study, the examination in this part will enable the Commission also to review the total statutory framework. That review may result in modifying some of the alternatives or applying approaches in one subject area to other areas.

This approach will allow the Commission to explore more fully the range of possible approaches and to evaluate implications of these newly developed or modified approaches.

While reviewing and evaluating alternative approaches to existing issues, the Commission also will examine whether economic and other non-regulatory approaches can be used effectively to deal with the major issues created by the Act and whether these alternatives will help simplify compliance requirements. As discussed previously, these approaches may include auction or other market approaches, emission taxes and other alternative concepts to existing PSD and non-attainment requirements. The Commission will develop candidate alternatives in light of future growth and technology projections and those alternatives will be examined in terms of enforceability, economic impact and needed institutional relationships.

The results of these studies on alternative approaches will be an essential part of the basis for the Commission's overall recommendations.

IX. The Final Report

Upon concluding the studies in the eight areas described above, the Commission will review and compile the findings of each. These findings will then be reviewed in the context of the overall statutory scheme; within two months of completion of all studies, a draft report will be prepared for review by the general public. After that review, the Commission will consider the views and comments and prepare a final report to Congress.

The final report will contain recommendations on issues for which statutory modifications appear desirable and the framework for such modifications; issues for which no changes to the existing statute appear necessary; issues for which modifications to current administrative practices and procedures would be appropriate; and will identify areas where further research is necessary.

[FR Doc. 79-[illegible] Filed 7-5-79; 8:45 am]
BILLING CODE 6820-98-M

NATIONAL FOUNDATION ON THE ARTS AND THE HUMANITIES

Humanities Panel Meeting

July 2, 1979.

Pursuant to the provisions of the Federal Advisory Committee Act (Public Law 92-364 as amended), notice is hereby given that a meeting of the Humanities Panel will be held at 806 15th Street, N.W., Washington, D.C. 20506, in room 1023, from 9 a.m. to 5:30 p.m. on Monday, July 23, 1979.

The purpose of the meeting is to review NEH Centers for Advanced Study applications submitted to the National Endowment for the Humanities for projects beginning after January 1, 1980.

Because the proposed meeting will consider financial information and disclose information of a personal nature the disclosure of which would constitute a clearly unwarranted invasion of personal privacy, pursuant to authority granted me by the Chairman's Delegation of Authority to Close Advisory Committee Meetings, dated January 15, 1978, I have determined that the meeting would fall within exemptions (4) and (6) of 5 U.S.C. 552b(c) and that it is essential to close the meeting to protect the free exchange of internal views and to avoid interference with operation of the Committee.

It is suggested that those desiring more specific information contact the Advisory Committee Management Officer, Mr. Stephen J. McCleary, 806 15th Street, N.W., Washington, D.C. 20506, or call area code 202-724-0367.

Stephen J. McCleary,
Advisory Committee Management Officer.

[FR Doc. 79-20917 Filed 7-5-79; 8:45 am]
BILLING CODE 7536-01-M

Visual Arts Panel; Meeting

Pursuant to Section 10(a)(2) of the Federal Advisory Committee Act (Pub. L. 92-463), as amended, notice is hereby given that a meeting of the Visual Arts Advisory Panel to the National Council on the Arts will be held July 23, 1979, from 9:00 a.m. to 5:30 p.m., in room 1426, Columbia Plaza Office Building, 2401 E Street, NW., Washington, D.C.

This meeting is for the purpose of Panel review, discussion, evaluation, and recommendation on applications for

financial assistance under the National Foundation on the Arts and the Humanities Act of 1965, as amended, including discussion of information given in confidence to the agency by grant applicants. In accordance with the determination of the Chairman published in the Federal Register of March 17, 1977, these sessions will be closed to the public pursuant to subsection (c) (4), (6) and 9(B) of section 552 of Title 5, United States Code.

Further information with reference to this meeting can be obtained from Mr. John H. Clark, Advisory Committee Management Officer, National Endowment for the Arts, Washington, D.C. 20506, or call (202) 634-6070.

John H. Clark,

Director, Office of Council and Panel Operations, National Endowment for the Arts.

[FR Doc. 79-20865 Filed 7-5-79; 8:45 am]

BILLING CODE 7537-01-M

NATIONAL SCIENCE FOUNDATION

Availability of Report of Advisory Committee for Minority Programs in Science Education

The National Science Foundation has filed with the Library of Congress a report entitled "The 1978 Annual Report of the Advisory Committee for Minority Programs in Science Education", which was prepared by the Advisory Committee for Minority Programs in Science Education.

The report was filed in accordance with the Federal Advisory Committee Act, Pub. L. 92-463, and is available for public inspection and use at the Library of Congress, Rare Book Division Rm. 256, Washington, D.C. A copy of the report is also available for public inspection and use at the National Science Foundation, Committee Management Office, Rm. 248, Washington, D.C.

Dated: July 2, 1979.

Joyce F. Laplante,

Acting Committee Management Coordinator.

[FR Doc. 79-20915 Filed 7-5-79; 8:45 am]

BILLING CODE 7555-01-M

Subcommittee for Oceanography Project Support of Advisory Committee for Ocean Sciences; Changes in Meeting Announcement

The above named Subcommittee has made the following changes in their notice:

Name: Subcommittee for Ocean Sciences Research.

DATE AND TIME: July 23-25, 1979, 9:00 a.m. to 6:00 p.m., each day.

Place: Rooms 536, 510, 540, 628 and 642, National Science Foundation, 1800 G Street, N.W., Washington, D.C.

Contact person: Dr. Robert E. Wall, Head, Oceanography Section, Room 611, National Science Foundation, Washington, D.C. 20550, telephone 202/634-4227, and Dr. Grant Gross, Head, IDOE, Room 605, National Science Foundation, Washington, D.C. 20550, telephone 202/632-4334.

The original Notice of Meeting appeared in the Federal Register Monday, June 25, 1979, Vol. 44, No. 123, page 37093.

Dated: July 2, 1979.

Joyce F. Laplante,

Acting Committee Management Coordinator.

[FR Doc. 79-20916 Filed 7-5-79; 8:45 am]

BILLING CODE 7555-01-M

NUCLEAR REGULATORY COMMISSION

[Docket No. 50-331]

Iowa Electric Light & Power Co. (Duane Arnold Energy Center); Request for Action Under 10 CFR 2.206

Notice is hereby given that by petition received June 1, 1979, dated April 9, 1979, the Citizens United for Responsible Energy, Community Action Research Group, and Iowa Public Interest Research Group requested that the Director of Nuclear Reactor Regulation order suspension of License Amendment No. 46 to License No. DPR-49 for the Duane Arnold Energy Center. This petition is being treated as a request for action under 10 CFR 2.206 of the Commission's regulations, and accordingly, action will be taken on the petition within a reasonable time.

Copies of the petition are available for inspection in the Commission's Public Document Room at 1717 H Street, NW., Washington, D.C. 20555 and in the local public document room at the Cedar Rapids Public Library, 426 Third Avenue, SE., Cedar Rapids, Iowa 52401.

Dated at Bethesda, Maryland, this 26th day of June 1979.

For the Nuclear Regulatory Commission.

Harold R. Denton,

Director, Office of Nuclear Reactor Regulation.

[FR Doc. 79-20763 Filed 7-5-79; 8:45 am]

BILLING CODE 7590-01-M

[Docket Nos. 50-387 and 50-388]

Pennsylvania Power & Light Co. and Allegheny Electric Cooperative, Inc.; Availability of Draft Environmental Statement for Susquehanna Steam Electric Station, Units 1 and 2

Pursuant to the National Environmental Policy Act of 1969 and the United States Nuclear Regulatory Commission's regulations in 10 CFR Part 51, notice is hereby given that a Draft Environmental Statement (NUREG-0564) prepared by the Commission's Office of Nuclear Reactor Regulation related to the proposed operation of the Susquehanna Steam Electric Station, Units 1 and 2, located in Luzerne County, Pennsylvania, is being made available for inspection by the public in the Commission's Public Document Room at 1717 H Street, NW, Washington, DC and in the Osterhout Free Library, Reference Department, 71 South Franklin Street, Wilkes-Barre, Pennsylvania. The Draft Statement is also being made available at the Pennsylvania State Clearinghouse, Governor's Budget Office, Intergovernment Relations Division, Harrisburg, Pennsylvania, and at the Luzerne County Planning Commission, Court House, Wilkes-Barre, Pennsylvania, and the Economic Development Council of Northeast Pennsylvania, Avoca, Pennsylvania. Requests for copies of the Draft Environmental Statement should be addressed to the U.S. Nuclear Regulatory Commission, Washington, DC, Attention: Director, Division of Technical Information and Document Control.

The Applicant's Environmental Report, as supplemented, submitted by Pennsylvania Power and Light Company and Allegheny Electric Cooperative, Inc. is also available for public inspection at the above-designated locations. Notice of availability of the Applicant's Environmental Report was published in the Federal Register on August 9, 1978 (43 FR 35406).

Pursuant to 10 CFR Part 51, interested persons may submit comments on the Applicant's Environmental Report, as supplemented, and the Draft Environmental Statement for the Commission's consideration. Federal and State agencies are being provided with copies of the Applicant's Environmental Report and the Draft

Environmental Statement (local agencies may obtain these documents upon request). Comments are due by August 21, 1979. Comments by Federal, State, and local officials, or other persons received by the Commission will be made available for public inspection at the Commission's Public Document Room in Washington, DC and the Osterhout Free Library, Wilkes-Barre, Pennsylvania. Upon consideration of comments submitted with respect to the Draft Environmental Statement, the Commission's staff will prepare a Final Environmental Statement, the availability of which will be published in the Federal Register.

Comments on the Draft Environmental Statement from interested persons of the public should be addressed to the U.S. Nuclear Regulatory Commission, Washington, DC 20555, Attention: Director, Division of Site Safety and Environmental Analysis.

Dated at Bethesda, Maryland, this 27th day of June 1979.

For the Nuclear Regulatory Commission.

Donald E. Sells,

Acting Branch Chief, Environmental Projects Branch 2, Division of Site Safety and Environmental Analysis.

[FR Doc. 79-20764 Filed 7-5-79; 8:45 am]

BILLING CODE 7590-01-M

[Docket No. 50-272-SP; Operating License No. DPR-70]

Public Service Electric & Gas Co. (Salem Nuclear Generating Station, Unit 1); Reconstitution of Board

Lester Kornblith, Jr. was a member of the Atomic Safety and Licensing Board for the above proceeding. Mr. Kornblith is retiring and is unable to continue his service on this Board.

Accordingly, Mr. Frederick J. Shon, whose address is Atomic Safety and Licensing Board Panel, U.S. Nuclear Regulatory Commission, Washington, D.C. 20555, is appointed a Member of this Board. Reconstitution of the Board in this manner is in accordance with § 2.721 of the Commission's rules of practice, as amended.

Dated at Bethesda, Maryland this 27th day of June 1979.

Robert M. Lazo,

Acting Chairman, Atomic Safety and Licensing Board Panel.

[FR Doc. 79-20765 Filed 7-5-79; 8:45 am]

BILLING CODE 7590-01-M

[Docket No. PRM-50-22]

Response to and Partial Denial of Petition for Rulemaking Filed by the Public Interest Research Group, et al.

Correction

In FR Doc. 79-19566 appearing at page 36523 in the issue for Friday, June 22, 1979, in the middle column of page 36524, under "Present NRC Requirements Relating to Financial Qualifications of Nuclear Power Plant Operators", change the second paragraph to read as follows:

* * * * *

Under the provisions of § 50.71(b) of Part 50, "* * * each licensee and each holder of a construction permit shall, upon each issuance of its annual financial report, including the certified financial statements, file a copy thereof with the Commission." This requirement provides the NRC staff with current information about a licensee's financial status during the operating life of a nuclear power plant. Appendix C of Part 50 is intended to apprise applicants of the general kinds of financial data and other related information that will demonstrate the financial qualifications of the applicant to carry out the activities for which the license is sought. The foregoing requirements do not provide procedures or methods for funding the decommissioning of nuclear power plants. Neither do they specify particular decommissioning methods *or implementing mechanisms for accumulation of funds.* They do, however, provide for determination (prior to plant operation) that a nuclear power plant licensee possesses or has reasonable assurance of obtaining sufficient funds for shutting down and maintaining his nuclear power plant in a safe condition.

* * * * *

BILLING CODE 1505-01-M

[Docket No. 50-338]

Virginia Electric & Power Co.; Issuance of Amendment to Facility Operating License

The U.S. Nuclear Regulatory Commission (the Commission) has issued Amendment No. 12 to Facility Operating License No. NPF-4, issued to Virginia Electric and Power Company, which revises pages to the Appendix A technical Specifications for operation of the North Anna Power Station, Unit No. 1 (the facility) located in Louisa County, Virginia. The amendment is effective as of its date of issuance.

The amendment revises Appendix A Technical Specifications 3/4.7.12 and 3/4.7.13 and Tables 3.7-5 and 3.7-6 concerning the maximum allowable settlement values of Class I structures and allowable groundwater conditions of the pumphouse and service water reservoir.

The application for the amendment dated June 13, 1978, and revised on May 17, 1979, complies with the standards and requirements of the Atomic Energy Act of 1954, as amended (the Act), and the Commission's regulations. The Commission has made appropriate findings as required by the Act and the Commission's regulations in 10 CFR Chapter I, which are set forth in the license amendment. Prior public notice of this amendment was not required since the amendment does not involve a significant hazards consideration.

The Commission has determined that the amendment does not authorize a change in effluent types or total amounts nor an increase in power level and will not result in any significant environmental impact. Having made this determination, it has further been concluded that the amendment involves an action which is insignificant from the standpoint of environmental impact and pursuant to 10 CFR Section 51.5(d)(4), that an environmental impact statement or negative declaration and environmental impact appraisal need not be prepared in connection with the issuance of this amendment.

For further details with respects to this action, see (1) Virginia Electric and Power Company letters, dated June 13, 1978 and May 17, 1979; (2) Amendment No. 12 to License No. NPF-4 with Appendix A Technical Specification page changes, and (3) the Commission's related Safety Evaluation, dated January 9, 1979, and supplemented by testimony to the Atomic Safety and Licensing Appeal Board, dated April 27, 1979. All of these items are available for public inspection at the Commission's Public Document Room, 1717 H Street, N.W., Washington, D.C. 20555 and at the Board of Supervisor's Office, Louisa County Courthouse, Louisa, Virginia 23093 and at the Alderman Library, Manuscripts Department, University of Virginia, Charlottesville, Virginia 22901. A copy of items (2) and (3) may be obtained upon request addressed to the U.S. Nuclear Regulatory Commission, Washington, D.C. 20555, Attention: Director, Division of Project

Management, Office of Nuclear Reactor Regulation.

Dated at Bethesda, Maryland this 28th day of June, 1979.

For the Nuclear Regulatory Commission.

Olan D. Parr,

Chief, Light Water Reactors Branch No. 3, Division of Project Management.

[FR Doc. 79-20766 Filed 7-5-79; 8:45 am]

BILLING CODE 7590-01-M

[Docket Nos. 50-338SP; 50-339SP; Proposed Amendment to Operating License NPF-4]

Virginia Electric & Power Co. (VEPCO) (North Anna Power Station Units 1 and 2); Order Allowing Additional Time for Certain Answers and Resetting Time for Hearing on Proposed Amendment to Operating License NPF-4

In the Matter of Virginia Electric and Power Company (VEPCO) (North Anna Power Station Units 1 and 2).

1. Upon reconsideration of the reasons offered by Potomac Alliance why it could not answer adequately VEPCO's motion for summary disposition, the Licensing Board allows Potomac Alliance additional time, to on or before July 23, 1979, for supplementing its answers to said motion. Under these circumstances, the Licensing Board will reconsider its order of June 18, 1979 partially granting VEPCO's motion for summary disposition.

2. In view of the foregoing, the Licensing Board cancels the scheduled prehearing conference for July 9, 1979 and the hearing to follow immediately thereafter, and reschedules the prehearing conference and hearing, if required, as follows:

Prehearing Conference—9:30 a.m., Tuesday, August 14, 1979.

Hearing—Immediately following the prehearing conference and continuing through the work week if necessary.

The location of the prehearing conference and hearing shall be the same as scheduled before, namely, the Council Chambers, City Hall (2nd floor,) 7th and Main Streets, Charlottesville, Virginia.

3. The NRC Staff and Potomac Alliance are allowed an additional five days beyond the time provided for at 10 CFR § 2.730 to file answers to VEPCO's motion for interim relief. Similarly, VEPCO and the NRC Staff are also allowed an additional five days to file answers to Potomac Alliance's motion to add to the list of contentions in dispute its contention of SEISMICITY and to Potomac Alliance's motion that the Licensing Board undertake a declaration that each contention in dispute be addressed within "the time frame bounded by the point at which the materials to be stored in the spent fuel pool will cease to prevent significant radiation hazards."

Done this 29th day of June 1979 at Washington, D.C.

Atomic Safety and Licensing Board.

Valentine B. Deale,

Chairman.

[FR Doc. 79-20767 Filed 7-5-79; 8:45 am]

BILLING CODE 7590-01-M

Staff Assesment of Proposed Agreement Between the NRC and the State of Rhode Island

Note.—This document originally appeared in the Federal Register for Friday, June 29, 1979. It is reprinted in this issue to meet requirements for publication on an assigned day of the week. (See CFR notice 41 FR 32914, August 6, 1976.)

Notice is hereby given that the U.S. Nuclear Regulatory Commission is publishing for public comment the staff assessment of a proposed agreement received from the Governor of the State of Rhode Island for the assumption of certain of the Commission's regulatory authority pursuant to section 274 of the Atomic Energy Act of 1954, as amended.

The staff assessment of the proposed agreement, the proposed agreement and a narrative, prepared by the State of Rhode Island and describing the State's proposed program for control over sources of radiation, is set forth below as an appendix to this notice. A copy of the program narrative, including the referenced appendices,[1] appropriate State legislation and Rhode Island regulations, is available for public inspection in the Commission's public document rooms at 1717 H Street, N.W., Washington, D.C. All interested persons desiring to submit comments and suggestions for the consideration of the Commission in connection with the proposed agreement should send them, in triplicate, to the Office of State Programs, U.S. Nuclear Regulatory Commission, Washington, D.C. 20555; Attention: Edgar C. Ashley (301) 492-7767 on or before July 30, 1979.

Exemptions from the Commission's regulatory authority which would implement this proposed agreement, have been published in the Federal Register and codified as Part 150 of the Commission's regulations in Title 10 of the Code of Federal Regulations.

Dated at Bethesda, Maryland, this 25th day of June 1979.

[1] Filed with the Office of the Federal Register as part of the original document.

For the U.S. Nuclear Regulatory Commission.

Robert G. Ryan,

Director, Office of State Programs.

Appendix—Staff Assessment—Summary

The Commission has received a proposal from the Governor of Rhode Island for the State to enter into an agreement with the NRC whereby the NRC would relinquish and the State would assume certain regulatory authority pursuant to section 274 of the Atomic Energy Act of 1954, as amended.

I. Background

A. Section 274 of the Atomic Energy Act of 1954, as amended provides a mechanism whereby the NRC may transfer to the States certain regulatory authority over agreement materials[1] when a State desires to assume this authority and the Governor certifies that the State has an adequate regulatory program, and when the Commission finds that the State's program is compatible with that of the NRC and is adequate to protect the public health and safety. Section 274g directs the Commission to cooperate with the States in the formulation of standards for protection against radiation hazards to assure that State and Commission programs for radiation protection will be coordinated and compatible. Further, section 274j provides that:

"The Commission, upon its own initiative after reasonable notice and opportunity for hearing to the State with which an agreement under subsection b. has become effective, or upon request of the Governor of such State, may terminate or suspend all or part of its agreement with the State and reassert the licensing and regulatory authority vested in it under this Act, if the Commission finds that (1) such termination or suspension is required to protect the public health and safety, or (2) the State has not complied with one or more of the requirements of this section. The Commission shall periodically review such agreements and actions taken by the States under the agreements to ensure compliance with the provisions of this section."

B. In a letter dated May 25, 1979, Governor J. Joseph Garrahy of the State of Rhode Island requested that the Commission enter into an agreement with the State pursuant to section 274 of the Atomic Energy Act of 1954, as amended, and proposed that the agreement become effective on October 1, 1979. The Governor certified that the State of Rhode Island has a program for control of radiation hazards which is adequate to protect the public health and safety with respect to the materials within the State covered by the proposed agreement, and that the State of Rhode Island desires to assume regulatory responsibility for such materials.

The Governor has certified that there is no byproduct material as defined in section 11e.(2) of the Act within the State and that there is no activity within the State resulting in the production of byproduct material as defined in section 11e.(2) of the Act. At the

[1] A. Byproduct materials;

B. Source materials; and

C. Special nuclear materials in quantities not sufficient to form a critical mass.

same time, the staff has determined that there are no NRC licenses outstanding in the State for byproduct material as defined in section 11e.(2) of the Act or for any activity within the State resulting in the production of byproduct material as defined in section 11e.(2) of the Act.

The proposed agreement provides for necessary amendments to the agreement in the event that the State wishes to regulate byproduct material as defined in section 11e.(2) of the Act and recognizes that it will be necessary to amend the agreement in the event any activity resulting in the production of byproduct material as defined in section 11e.(2) of the Act is found to exist within the State.

The eight Articles of the proposed agreement cover the following areas:

I. Lists the materials covered by the agreement.

II. Lists the Commission's continued authority and responsibility for certain activities.

III. Allows for certain regulatory changes by the Commission.

IV. References the continued authority of the Commission for common defense and security and safeguards purposes.

V. Pledges the best efforts of the Commission and the State to achieve coordinated and compatible programs.

VI. Recognizes reciprocity of licenses issued by the respective agencies.

VII. Sets forth criteria for termination or suspension of the agreement.

VIII. Specifies the effective date of the agreement.

C. Title 23, Chapter 1.3, as amended, of the General Laws of Rhode Island authorizes the Radiation Control Agency of the Department of Health to issue licenses to, and perform inspections of, users of radioactive materials under the proposed agreement and otherwise carry out a total radiation control program.

Rhode Island Rules and Regulations for the Control of Radiation, adopted in accordance with the Rhode Island Radiation Control Act, Title 23, Chapter 1.3 of the General Laws and the Administrative Procedure Act, Title 42, Chapter 35 of the General Laws, provides standards, licensing, inspection, enforcement and administrative procedures for agreement and non-agreement materials. The regulations are not applicable to agreement materials until the effective date of the agreement. The Rhode Island regulations became effective June 2, 1978 as they relate to X-ray machines and non-agreement materials such as naturally occurring and accelerator produced radioactive materials.

D. Environmental radiation issues with which the Division of Occupational Health and Radiation Control has been involved include: Monitoring and assessment of the impact of radioactive fallout from nuclear weapons testing; monitoring and assessment of off-site impact of effluents from facilities utilizing large quantities of special nuclear materials; review of environmental reports and safety analysis reports submitted to support applications for EPA permits and NRC licenses; monitoring and assessment of levels of radioactivity in public, community, and private drinking water supplies; and assistance to other State agencies when environmental radiation issues arise.

The Rhode Island Department of Environmental Management (DEM) is the department responsible for environmental protection within the State. The State laws governing hazardous waste, air pollution, and water pollution are included in Appendix I of the description of Rhode Island Radiation Control Program. The memoranda of understanding from the three divisions involved are contained in Appendix X.

The Division of Land Resources, DEM, will not issue a permit for a low-level radioactive waste burial site until a license has been issued by the Radiation Control Agency. Presently, the Division of Air Resources, DEM, does not have any air quality standards for radioactive air pollutants, and in the absence of any guidance from the United States Environmental Protection Agency (EPA), the division does not plan to regulate such materials.

The Division of Water Resources, DEM, does not issue EPA water discharge permits, but they do certify the adequacy of the applications. In their review they will assure that all discharges meet the standards contained in Appendix a, Table II, Column II of the Rhode Island rules and regulations.

E. The estimated budget for Radiation Control for fiscal year 1980 (July 1, 1979 to June 30, 1980) is $164,500. Funding for Radiation Control is 78% State and 22% Federal. Federal funds include $12,000 from the Bureau of Radiological Health for compliance testing of diagnostic X-ray and $23,590 in HEW block grant monies.

It is estimated that $78,000 will be necessary to fund the radioactive materials activities of the Radiation Control Section. Radioactive material activities in the section will include naturally occurring and accelerator produced radioactive materials (NARM), environmental radiation programs and impact reviews, emergency response, industrial and academic X-ray facilities and agreement material activities.

Approximately one-third of the radioactive material budget, or $25,700 will be designated for the agreement material activities.

It is expected that close to 45 of approximately 50 NRC radioactive material licenses currently in effect in Rhode Island would be transferred to the State under the proposed Agreement. The State's budget for the agreement material program would therefore be approximately $570 per license. This compares to our recommended funding level range of $200–$350 per license.

II. Assessment of Proposed Rhode Island Program for Control of Agreement Materials

Reference: Criteria for Agreement With States Under Section 274 of the Atomic Energy Act of 1954, as Amended.[1]

Objectives

1. *Protection, Development.* A state regulatory program shall be designed to protect the health and safety of the people against radiation hazards, thereby encouraging the constructive uses of radiation.

Based upon the analysis of the State's proposed regulatory program (following) the staff believes the Rhode Island proposed regulatory program for agreement materials is adequately designed to protect the health and safety of the people against radiation hazards.

Radiation Protection Standards[2]

2. *Standards.* The state regulatory program shall adopt a set of standards for protection against radiation, which shall apply to byproduct, source and special nuclear materials in quantities not sufficient to form a critical mass.

Statutory authority to formulate and promulgate rules and regulations is contained in the Rhode Island Radiation Control Act (Title 23 of the general laws entitled, "Health and Safety," Chapter 1.3, hereafter referred to as RIRCA) Section 23–1.3–2 (4). In accordance with that authority, the state has proposed Rules and Regulations for the Control of Radiation (hereafter referred to as RIRR) which include radiation protection standards which would apply to byproduct, source and special nuclear materials in quantities not sufficient to form a critical mass upon the effective date of an agreement between the state and the Commission pursuant to Section 274b of the Atomic Energy Act of 1954, as amended.

References: RIRCA Section 23–1.3–2 (4). RIRR Part A.

3. *Uniformity in Radiation Standards.* It is important to strive for uniformity in technical definitions and terminology, particularly as related to such things as units of measurement and radiation dose. There shall be uniformity on maximum permissible doses and levels of radiation and concentrations of radioactivity, as fixed by 10 CFR Part 20 of the NRC regulations based on officially approved radiation protection guides.

Technical definitions and terminology contained in the Rhode Island regulations including those related to units of measurement and radiation dose are uniform with those contained in 10 CFR Part 20, *except* the definition of byproduct material conforms to that contained in the Atomic Energy Act prior to enactment by Congress of Pub. L. 95–604, 92 Stat. 3021 et seq., November 8, 1978, the Uranium Mill Tailings Radiation Control Act of 1978 (UMTRCA). Enactment of Pub. L. 95–604 took place after promulgation of the proposed state regulations. The staff notes that Rhode Island is not now the site of mill tailings from ores processed primarily for their source material content nor is it likely to become such a site in the foreseeable future. The definition of byproduct material currently in use by the 25 Agreement States is that contained in the Atomic Energy Act of 1954, as amended prior to enactment of Pub. L. 95–604. NRC staff is preparing draft model State legislation which, when enacted by affected states, will enable

[1] As adopted in February 1961 (26 FR 2537, March 24, 1961), and amended in November 1965 (30 FR 15044, December 4, 1965). Minor editorial changes have been made to reflect changes in reorganization and authority of Federal agencies.

[2] The Conference of Radiation Control Program Directors' model State regulations and State legislation for control of radiation were used as a basis for all criteria enunciated.

them to conform with the requirements of UMTRCA, including the amended definition of byproduct material. The States have until November 7, 1981 to enact such legislation and adopt other necessary regulatory requirements if the States desire to continue to regulate ores processed primarily for their source material content and disposal of byproduct materials as defined in Section 11e (2) of the Atomic Energy Act, as amended, pursuant to a Section 274b agreement with the NRC.

In view of the above, the absence of a definition of byproduct material conforming to that contained in Section 11e (2) of the Atomic Energy Act of 1954, as amended, is not viewed as a significant departure at this time from the need for uniformity in radiation standards and should not be considered an impediment towards signing of a Section 274b agreement.

References: RIRR Part A and Annex, Governor Garrahy's letter dated May 25, 1979, Enclosure (1).

4. *Total Occupational Radiation Exposure.* The regulatory authority shall consider the total occupational radiation exposure of individuals, including that from sources which are not regulated by it.

The Rhode Island regulations cover all sources of radiation within the State's jurisdiction and provide for consideration of the total radiation exposure of individuals from all sources of radiation in the possession of a licensee or registrant.

References: RIRR, Parts A.2.1 and A.2.2.

5. *Surveys, Monitoring.* Appropriate surveys and personnel monitoring under the close supervision of technically competent people are essential in achieving radiological protection and shall be made in determining compliance with safety regulations.

The requirements for surveys to evaluate potential exposures from sources of radiation and the personnel monitoring requirements are uniform with those contained in 10 CFR Part 20.

References: RIRR, Parts A.3.1, A.3.2 and A.3.7 (c), (d) and (f); C.8.2(c); E.2.15, and Annex, definition no. 157.

6. *Labels, Signs, Symbols.* It is desirable to achieve uniformity in labels, signs and symbols, and the posting thereof. However, it is essential that there be uniformity in labels, signs, and symbols affixed to radioactive products which are transferred from person to person.

The prescribed radiation labels, signs, and symbols are uniform with those contained in 10 CFR Part 20, Parts 30 thru 32 and Part 34. The Rhode Island posting requirements are also uniform with those contained in Part 20.

References: RIRR, Parts A.3.3 and A.3.4, Part C, and Part E.2.

7. *Instruction.* Persons working in or frequenting controlled areas shall be instructed with respect to the hazards of excessive exposure to radioactive materials and in precautions to minimize exposure.

The Rhode Island regulations contain requirements for instructions and notices to workers that are uniform with those contained in 10 CFR Part 19.

References: RIRR, Part A.6.

8. *Storage.* Licensed radioactive material in storage shall be secured against unauthorized removal.

Licensed radioactive material in storage must be secured against unauthorized removal from places of storage.

References: RIRR, Parts A.3.6 and E.2.3.

9. *Waste Disposal.* The standards for the disposal of radioactive materials into the air, water, and sewers, and burial in the soil shall be in accordance with Part 20. Holders of radioactive material desiring to release or dispose of quantities in excess of the prescribed limits shall be required to obtain special permission from the appropriate regulatory authority.

The standards for the disposal of radioactive materials into the air, water and sewers and by burial in the soil are uniform with those in 10 CFR Part 20.

Holders of radioactive materials licenses desiring to release or dispose of concentrations or quantities in excess of the prescribed limits are required to obtain special permission from the Rhode Island Department of Health. The criteria for granting exceptions, as specified in the regulations, are uniform with those contained in 10 CFR Part 20.

References: RIRR, Part A.4.

10. *Regulations Governing Shipment of Radioactive Materials.* The state shall to the extent of its jurisdiction promulgate regulations applicable to the shipment of radioactive materials, such regulations to be compatible with those established by the U.S. Department of Transportation and other agencies of the United States whose jurisdiction over interstate shipment of such materials necessarily continues.

The transportation of licensed material including by common and contract carriers where such transportation is subject to the regulations of the U.S. Department of Transportation or the U.S. Postal Service is exempt from licensing. Other transportation is subject to licensing requirements and licensees must comply with applicable requirements of the U.S. Department of Transportation.

References: RIRR, Parts A.1.4(b), C.4.3 and C.7.

11. *Records and Reports.* The state regulatory program shall require that holders and users of radioactive materials: (a) maintain records covering personnel radiation exposures, radiation surveys, and disposals of materials; (b) keep records of the receipt and transfer of the materials; (c) report significant incidents involving the materials, as prescribed by the regulatory authority; (d) make available upon request of a former employee a report of his exposure to radiation; (e) at request of an employee advise him of his annual radiation exposure; and (f) inform each employee in writing when he has received radiation exposure in excess of the prescribed limits.

The Rhode Island regulations require the following records reports by licensees and registrants:

a. Records covering personnel radiation exposures, radiation surveys and disposal of materials.

References: RIRR, Parts A.5, C.8.2(c) and E.2.15.

B. Records of receipts and transfer of licensed materials. Reference: RIRR Part A.1.5.

c. Reports of radiation incidents, overexposures and excessive levels and concentrations are defined in provisions uniform with those contained in 10 CFR Part 20.

Reference: RIRR Parts A.5.2, A.5.3, and A.5.4.

d. reports to former employees or to individuals of their exposure to radiation or radioactive material.

References: RIRR Parts A.5.5, A.5.7, and A.6.4.

12. *Additional Requirements and Exemptions.* Consistent with the overall criteria here enumerated and to accommodate special cases or circumstances, the regulatory authority shall be authorized in individual cases to impose additional requirements to protect health and safety, or to grant necessary exemptions which will not jeopardize health and safety.

The Rhode Island Department of Health is authorized to impose upon any licensee or registrant, by rule, regulation, or order such requirements in addition to those established in the regulations as it deems appropriate or necessary to minimize danger to public health and safety or property.

Reference: RIRR Part A.1.8.

The Rhode Island Department of Health is authorized to exempt certain radiation sources, uses or users from licensing or registration requirements when it makes a finding that the exemption will not constitute a significant risk to the public health and safety.

Reference: RIRCA 23-1-.3-5(d).

Prior Evaluation of uses of Radioactive Materials

13. *Prior Evaluation of Hazards and Uses, Exceptions.* In the present state of knowledge, it is necessary in regulating the possession and use of byproduct, source and special nuclear materials that the regulatory authority require the submission of information on, and evaluation of, the potential hazards and capability of the user or possessor prior to his receipt of the materials. This criterion is subject to certain exceptions and to continuing reappraisal as knowledge and experience in the atomic energy field increase. Frequently there and, and increasingly in the future there may be, categories of materials and uses as to which there is sufficient knowledge to permit possession and use without prior evaluation of the hazards and the capability of the possessor and user. These categories fall into two groups—those materials and uses which may be completely exempt from regulatory controls, and those materials and uses in which sanctions for misuse are maintained without preevaluation of the individual possession or use. In authorizing research

and development or other activities involving multiple uses of radioactive materials, where an institution has people with extensive training and experience, the regulatory authority may wish to provide a means for authorizing broad use of materials without evaluating each specific use.

Prior to the issuance of a specific license for the use of radioactive material, the Rhode Island Department of Health will require the submission of information on, and will make an evaluation of, the potential hazards of such uses, and the capability of the applicant.

References: RIRR Parts C.1, C.3.1(b), and C.5, Governor Garrahy's letter dated May 25, 1979, Enclosure (2).

Provision is made for the issuance of general licenses for byproduct, source and special nuclear materials in situations where prior evaluation of the licensee's qualifications, facilities, equipment and procedures is not required. The regulations grant general licenses under the same circumstances as those under which general licenses are granted in the Commission's regulations.

References: RIRR Parts C.1, C.3.1(a), C.4 and C.6.

14. *Evaluation Criteria.* In evaluating a proposal to use radioactive materials, the regulatory authority shall determine the adequacy of the applicant's facilities and safety equipment, his training and experience in the use of the materials for the purpose requested, and his proposed administrative controls.

In evaluating a proposal to use agreement materials, the Rhode Island Department of Health will determine whether:

a. The applicant is qualified by reason of training and experience to use the material in question for the purpose requested in a manner as to minimize danger to public health and safety or property;

b. The applicant's proposed equipment, facilities, and procedures are adequate to minimize danger to public health and safety or property; and

c. The issuance of the license will not be inimical to the health and safety of the public.

Reference: RIRR Part C.5.2.

Special requirements for the issuance of specific licenses are contained in the regulations.

References: RIRR Parts C.5.3, C.5.4 and C.5.5.

15. *Human Use.* The use of radioactive materials and radiation on or in humans shall not be permitted except by properly qualified persons (normally, licensed physicians) possessing prescribed minimum experience in the use of radioisotopes or radiation.

The use of radioactive materials or sealed sources on or in humans will be permitted only by licensed physicians possessing prescribed experience in the use, handling and administration of radioisotopes or radiation. Rhode Island requirements regarding such use are uniform with those of the NRC.

References: RIRR Part C.5.3(a) through (d), Governor Garrahy's letter dated May 25, 1979, Enclosure (2).

Inspection

16. *Purpose, Frequency.* The possession and use of radioactive materials shall be subject to inspection by the regulatory authority and shall be subject to the performance of tests, as required by the regulatory authority. Inspection and testing is conducted to determine, and to assist in obtaining, compliance with regulatory requirements. Frequency of inspection shall be related directly to the amount and kind of material and type of operation licensed, and it shall be adequate to insure compliance.

The possession and use of radioactive materials will be subject to inspection by the Rhode Island Department of Health and also to the performance of tests as required by or performed by the Department. Inspection and testing will be conducted to determine compliance with State regulations and to determine adequacy of the licensee's radiation protection program. Proposed inspection procedures are similar to those of the NRC Office of Inspection and Enforcement.

The frequency of inspections is dependent upon the type and scope of the licensed activities and will be at least as frequent, and in most cases, more frequent than inspections of similar licensees by NRC.

References: RIRR Parts A.1.6 and A.1.7, Governor Garrahy's letter dated May 25, 1979, Enclosure (2).

17. *Inspections Compulsory.* Licensees shall be under obligation by law to provide access to inspectors.

The Director of Health or his duly authorized representatives shall have the power to enter at all reasonable times upon any private or public property for the purpose of determining whether or not there is compliance with the state radiation control act and rules and regulations issued thereunder.

References: RIRCA Section 23-1.3-4, RIRR Part A.1.6(a).

18. *Notification of Results of Inspection.* Licensees are entitled to be advised of the results of inspections and to notice as to whether or not they are in compliance.

When there are items of noncompliance, licensees must be informed at the time of inspection. Written notices of violations will also be provided by the Department.

References: RIRR Part A.7.1 (a), (b) and (c), Governor Garrahy's letter dated May 25, 1979, Enclosure (2).

Enforcement

19. *Enforcement.* Possession and use of radioactive materials should be amenable to enforcement through legal sanctions, and the regulatory authority shall be equipped or assisted by law with the necessary powers for prompt enforcement. This may include, as appropriate, administrative remedies looking toward issuance of orders requiring affirmative action or suspension or revocation of the right to possess and use materials, and the impounding of materials; the obtaining of injunctive relief; and the imposing of civil or criminal penalties.

The Department is equipped with the necessary powers for prompt enforcement of the regulations as follows:

a. Each Notice of Violation will require a consent agreement whereby the licensee shall provide a written response to the Agency within ten days of service of the Notice of Violation.

Reference: RIRR Part A.7.1 (c).

b. The Department may issue orders to suspend, modify or revoke licenses.

Reference: RIRR Part A.7.4.

c. When the administrator finds that an emergency exists requiring immediate action to protect the public health or welfare, he may issue an order reciting the existence of such an emergency and require such action be taken as deemed necessary to meet the emergency. The order shall be effective immediately, but upon application to the Director of Health, a hearing shall be afforded within 15 days.

References: RIRCA Section 23-1.3.9, RIRR Part A.7.3.

d. A civil action may be instituted in superior court on behalf of the agency for injunctive relief to prevent the violation of the provisions of RCA 23-1.3 or codes, rules or regulations promulgated hereunder and said court may proceed in the action in a summary manner or otherwise and may restrain in all such cases any person from violating any of the provisions of this chapter or said rules or regulations.

Reference: RIRCA Section 23-1.3-10.

e. Any person who willfully violates any provisions of the Radiation Control Act, the regulations, or orders issued thereunder may be guilty of a misdemeanor and subject to a fine or imprisonment, or both.

Reference: RIRR Part A.1.9.

Personnel

20. *Qualifications of Regulatory and Inspection Personnel.* The regulatory agency shall be staffed with sufficient trained personnel. Prior evaluation of applications for licenses or authorizations and inspection of licensees must be conducted by persons possessing the training and experience relevant to the type and level of radioactivity in the proposed use to be evaluated and inspected.

To perform these functions involved in evaluation and inspection, it is desirable that there be personnel holding a bachelor's degree or equivalent in the physical and/or life sciences, and that the personnel have had training and experience in radiation protection. The person who will be responsible for the actual performance of evaluation and inspection of all of the various uses of byproduct, source and special nuclear material which might come to the regulatory body should have substantial training and extensive experience in the field of radiation protection.

It is recognized that there will also be persons in the program performing a more limited function in evaluation and inspection. These persons will perform the day-to-day work of the regulatory program and deal with both routine situations as well as some which

will be out of the ordinary. These people should have a bachelor's degree or equivalent in the physical or life sciences, training in health physics, and approximately two years of actual work experience in the field of radiation protection.

The foregoing are considered desirable qualifications for the staff who will be responsible for the actual performance of evaluation and inspection. In addition, there will probably be trainees associated with the regulatory program who will have an academic background in the physical or life sciences as well as varying amounts of specific training in radiation protection but little or no actual work experience in this field. This background and specific training of these persons will indicate to some extent their potential role in the regulatory program. As they gain experience and competence in the field, the trainees could be used progressively to deal with the more complex or difficult types of radioactive material applications. It is desirable that such trainees have a bachelor's degree or equivalent in the physical or life sciences and specific training in radiation protection. In determining the requirement for academic training of individuals in all of the foregoing categories, proper consideration should be given to equivalent competency which has been gained by appropriate technical and radiation protection experience.

It is recognized that radioactive materials and their uses are so varied that the evaluation and inspection functions will require skills and experience in the different disciplines which will not always reside in one person. The regulatory authority should have the composite of such skills either in its employ or at its command, not only for routine functions, but also for emergency cases.

a. *Number of Personnel.* There are approximately 50 NRC specific licenses in the State of Rhode Island. Under the proposed agreement, the State would assume responsibility for about 45 of these licenses. In addition, there are approximately 1500 X-ray machines and 10 radium users in the State. The Radiation Control Agency is staffed with two professional persons to carry out the radioactive material control activities. We estimate the State will need to apply a minimum of 0.5 to 0.75 person-years of efforts to the program. The present personnel together with their assigned responsibilities are as follows:

James E. Hickey: Chief, Division of Occupational Health and Radiation Control. Administrator, Radiation Control Agency. Responsible for overall administration and supervision of Division activities.

James L. Nolan: Supervising Radiation Control Specialist. Will be responsible for the radioactive materials control program, environmental surveillance and emergency response activities. Mr. Nolan will administer the licensing and inspection activities.

The Agency also has four persons specifically assigned to the x-ray program.

b. *Training.* The academic and specialized short course training for those persons involved in the administration, licensing and inspection of radioactive materials is shown below.

Mr. Hickey holds an M.S. degree in Occupational and Radiological Health from the Harvard School of Public Health. Mr. Nolan holds an MSE degree in Air Resources Engineering from the University of Washington. Mr. Hickey and Mr. Nolan attended the following specialized short courses:

James Hickey—Radionuclide Analysis by Gamma Spectroscopy—DHEW, PHS, BRH, November 1966, Rockville, Maryland—Ten Days. State Emergency Planning in Relation to Licensed Nuclear Facilities—USAEC, March 1973, Brookhaven, New York—Three Days. Orientation in Regulatory Practices and Procedures—USNRC, September 1976, Bethesda, Maryland—Ten days.

James Nolan—NRC "Ten-Week Health Physics and Radiation Protection Course". NRC "Medical Use of Radionuclides for State Regulatory Personnel"—Five days. NRC "Orientation Course in Regulatory Practices and Procedures"—Ten days. NRC "Radiological Emergency Response Operations"—Eight days. NRC "Inspection Procedures"—Five days. NRC "Safety Aspects of Industrial Radiography for State Regulatory Personnel"—Five days. USEPA—Five courses on air pollution—Four to five days each.

c. *Experience.* Mr Hickey has been Health Specialist and Program Administrator, Rhode Island Department of Health, Occupational and Radiological Health Program since 1968. Mr. Nolan has been inspecting x-ray facilities, is a Health Physicist on the State emergency response team and supervisor of the radiological environmental monitoring program since January 1978. Mr. Nolan also worked as an Air Pollution Control Engineer and supervisor in the Air Quality Management Section of the State Department of Health during the period 1972–1978.

d. *Medical Advisory Committee.* The State's Medical Advisory Committee is an integral part of the Rhode Island Radiation Advisory Commission. By law, the Commission shall consist of eleven members. Areas of medical expertise represented on the Commission are nuclear medicine, nuclear pharmacy veterinary medicine, dentistry, diagnostic radiology, radiological physics, and radiologic technology. Applications for non-routine medical uses of radioactive materials will be referred to the Commission for evaluation and recommendations.

Reference: RIRCA 23–1.3–13.

Special Nuclear Material

21. *Conditions Applicable to Special Nuclear Material.* The State's regulations do not prohibit or interfere with the duties imposed by the NRC on holders of special nuclear material owned by the U.S. Department of Energy or licensed by NRC, such as the responsibility of licensees to supply to the NRC reports of transfer and inventory.

Reference: RIRR Part A.1.1(a).

22. *Special Nuclear Material Defined.* The definition of special nuclear material in quantities not sufficient to form a critical mass, as contained in the Rhode Island regulations, is uniform with the definition in 10 CFR Part 150.

Reference: RIRR Annex, Definition 151.

Administration

23. *Fair and Impartial Administration.* The State has incorporated into its program provisions for a fair and impartial administration of its regulatory program. Public participation is provided for in the:

(a) Adoption, amendment, or repeal of rules.

References: RIRCA 23–1.3–2(c)(4), RI Administrative Procedures Act 42–35, RIRR preamble.

(b) Granting, suspending, revoking, or amending of any license.

Reference: RI APA 42–35, RIRR A.7.

(c) Determination of compliance with rules and regulations.

References: RI APA 42–35, RIRR A.7.

Any person adversely affected by the final determination of the Agency may petition for the judicial review of such determination in the superior court and finally by appeal to the State Supreme Court.

Reference: RI APA 42–35.

Arrangements for Discontinuing NRC Jurisdiction

24. *State Agency Designation.* The Rhode Island Department of Health's Division of Occupational Health and Radiation Control has been designated as the State's Radiation Control Agency.

Reference: RIRCA 23–1.3–2.

25. *Existing NRC Lincenses and Pending Applications.* The Agency has made provision to continue NRC licenses in effect temporarily after the transfer of jurisdiction. Such licenses will expire either 90 days after receipt from the Agency of a notice of expiration or on the date of expiration specified in the federal license, whichever is earlier.

Reference: RIRCA 23–1.3–7.

26. *Relations with Federal Government and Other States.* The Rhode Island Radiation Control Agency is charged with advising, consulting and cooperating with the federal government, other states and interstate agencies, political subdivisions, industries, and with groups concerned with control of radiation sources.

Reference: RIRCA 23–1.3–2.

27. *Coverage, Reciprocity.* The proposed Rhode Island agreement provides for the assumption of regulatory authority over the following categories of materials within the State:

(a) Byproduct materials, as defined by Section 11e.(1) of the Atomic Energy Act, as amended.

(b) Source materials.

(c) Special nuclear materials in quantities not sufficient to form a critical mass.

Reference: Proposed Agreement, Article I.

Provision has been made by Rhode Island for the reciprocal recognition of licenses to permit activities within Rhode Island of persons licensed by other jurisdictions. This reciprocity is like that granted under 10 CFR Part 150.

Reference: RIRR C.6.

28. *NRC and Department of Energy Contractors.* The State's regulations provide that certain NRC and DOE contractors or subcontractors are exempt from the State's requirements for licensing and registration of sources of radiation which such persons receive, possess, use, transfer, or acquire.

Reference: RIRR A.1.4(c).

III. Staff Conclusion

Section 274d of the Atomic Energy Act of 1954, as amended, states: "The Commission shall enter into an agreement under subsection b. of this section with any State if—

"(1) The Governor of that State certifies that the State has a program for the control of radiation hazards adequate to protect the public health and safety with respect to the materials within the State covered by the proposed agreement, and that the State desires to assume regulatory responsibility for such materials; and

"(2) The Commission finds that the State program is in accordance with the requirements of subsection o. and in all other respects compatible with the Commission's program for the regulation of such materials, and that the State program is adequate to protect the public health and safety with respect to the materials covered by the proposed agreement."

The staff has concluded that the State of Rhode Island meets the requirements of section 274 of the Act. The State's statutes, regulations, personnel, licensing, inspection and administrative procedures are compatible with those of the Commission and adequate to protect the public health and safety with respect to the materials covered by the proposed agreement.

Agreement Between the United States Nuclear Regulatory Commission and the State of Rhode Island and Providence Plantations for Discontinuance of Certain Commission Regulatory Authority and Responsibility Within the State Pursuant to Section 274 of the Atomic Energy Act of 1954, as Amended

WHEREAS, The United States Nuclear Regulatory Commission (hereinafter referred to as the Commission) is authorized under Section 274 of the Atomic Energy Act of of 1954, as amended (hereinafter referred to as the Act), to enter into agreements with the Governor of any State providing for discontinuance of the regulatory authority of the Commission within the State under Chapters 6, 7, and 8, and Section 161 of the Act with respect to byproduct materials as defined in sections 11e.(1) and (2) of the Act, source materials, and special nuclear materials in quantities not sufficient to form a critical mass; and

WHEREAS, The Governor of the State of Rhode Island and Providence Plantations is authorized under 23-1.3-7 of the General Laws of Rhode Island to enter into this Agreement with the Commission; and

WHEREAS, the Governor of the State of Rhode Island and Providence Plantations certified on May 25, 1979, that the State of Rhode Island and Providence Plantations (hereinafter referred to as the State) has a program for the control of radiation hazards adequate to protect the public health and safety with respect to the materials within the State covered by this Agreement, and that the State desires to assume regulatory responsibility for such materials; and

WHEREAS, The Governor of the State of Rhode Island and Providence Plantations certified on May 25, 1979, that there is no byproduct material as defined in section 11e.(2) of the Act within the State and that there is no activity within the State resulting in the production of byproduct material as defined in section 11e.(2) of the Act; and

WHEREAS, The Commission found on , that the program of the State for the regulation of the materials covered by this Agreement is compatible with the Commission's program for the regulation of such materials and is adequate to protect the public health and safety; and

WHEREAS, The Commission found on , that there are no NRC licenses outstanding in the State for byproduct material as defined in section 11e.(2) of the Act or for any activity within the State resulting in the production of byproduct material as defined in section 11e(2) of the Act; and

WHEREAS, The State and the Commission recognize the desirability and importance of cooperation between the Commission and the State in the formulation of standards for protection against hazards of radiation and in assuring that State and Commission programs for protection against hazards of radiation will be coordinated and compatible; and

WHEREAS, The Commission and the State recognize the desirability of reciprocal recognition of licenses and exemptions from licensing of those materials subject to this Agreement; and

WHEREAS, The State and the Commission recognize that it will be necessary to consider amendments to this Agreement in the event that the State wishes to regulate byproduct material as defined in section 11e.(2) of the Act and that it will be necessary to amend this Agreement in the event any activity resulting in the production of byproduct material as defined in section 11e.(2) of the Act is found to exist within the State; and

WHEREAS, This Agreement is entered into pursuant to the provisions of the Atomic Energy Act of 1954, as amended;

NOW, THEREFORE, It is hereby agreed between the Commission and the Governor of the State, acting in behalf of the State, as follows:

Article I

Subject to the exceptions provided in Articles II, III, and IV, the Commission shall discontinue, as of the effective date of this Agreement, the regulatory authority of the Commission in the State under Chapters 6, 7, and 8, and Section 161 of the Act with respect to the following materials:

A. Byproduct materials as defined in section 11e.(1) of the Act;

B. Source materials; and

C. Special nuclear materials in quantities not sufficient to form a critical mass.

Article II

This Agreement does not provide for discontinuance of any authority and the Commission shall retain authority and responsibility with respect to regulation of:

A. The construction and operation of any production or utilization facility;

B. The export from or import into the United States of byproduct, source, or special nuclear material, or of any production or utilization facility;

C. The disposal into the ocean or sea of byproduct, source, or special nuclear waste materials as defined in regulations or orders of the Commission;

D. The disposal of such other byproduct, source, or special nuclear material as the Commission from time to time determines by regulation or order should, because of the hazards or potential hazards thereof, not be so disposed of without a license from the Commission.

Article III

Notwithstanding this Agreement, the Commission may from time to time by rule, regulation, or order, require that the manufacturer, processor, or producer or any equipment, device, commodity, or other product containing source, byproduct, or special nuclear material shall not transfer possession or control of such product except pursuant to a license or an exemption from licensing issued by the Commission.

Article IV

This Agreement shall not affect the authority of the Commission under subsection 161 b. or i. of the Act to issue rules, regulations, or orders to protect the common defense and security, to protect restricted data or to guard against the loss or diversion of special nuclear material.

Article V

The Commission will use its best efforts to cooperate with the State and other Agreement States in the formulation of standards and regulatory programs of the State and the Commission for protection against hazards of radiation and to assure that State and Commission programs for protection against hazards of radiation will be coordinated and compatible. The State will use its best efforts to cooperate with the Commission and other Agreement States in the formulation of standards and regulatory programs of the State and the Commission for protection against hazards of radiation and to assure that the State's program will continue to be compatible with the program of the Commission for the regulation of like materials. The State and the Commission will use their best efforts to keep each other informed of proposed changes in their respective rules and regulations and licensing, inspection and enforcement policies and criteria, and to obtain the

comments and assistance of the other party thereon.

Article VI

The Commission and the State agree that it is desirable to provide for reciprocal recognition of licenses for the materials listed in Article I licensed by the other party or by any Agreement State. Accordingly, the Commission and the State agree to use their best efforts to develop appropriate rules, regulations, and procedures by which such reciprocity will be accorded.

Article VII

The Commission, upon its own initiative after reasonable notice and opportunity for hearing to the State, or upon request of the Governor of the State, may terminate or suspend all or part of this Agreement and reassert the licensing and regulatory authority vested in it under the Act if the Commission finds that (1) such termination or suspension is required to protect the public health and safety or (2) the State has not complied with one or more of the requirements of section 274 of the Act. The Commission shall periodically review this Agreement and actions taken by the State under this Agreement to ensure compliance with section 274 of the Act.

Article VIII

This Agreement shall become effective on October 1, 1979 and shall remain in effect unless and until such time as it is terminated pursuant to Article VII.

Done at Providence, State of Rhode Island, in triplicate, this ———— day of ————.

For the United States Nuclear Regulatory Commission.

For the State of Rhode Island and Providence Plantations.

J. Joseph Garrahy, Governor.

The Rhode Island Radiation Control Program

Foreward

The State of Rhode Island and Providence Plantations, while recognizing that the scientific, medical, and industrial usages of atomic energy can be beneficial to its citizens, is also cognizant of the hazards inherent to ionizing radiation. With these hazards in mind, and considering that the State is committed to attain the highest practicable degree of protection for the public from the harmful effects of all types of radiation exposure and simultaneously permit the many beneficial applications of radiation, the 1976 Rhode Island State Legislature enacted the present Radiation Control Act.

Section 274 of the Atomic Energy Act of 1954, as amended, authorizes the United States Nuclear Regulatory Commission (NRC) to enter into an agreement with the governor of a state for purposes of transferring to that state certain functions of licensing and regulatory control of byproduct, source, and less than critical quantities of special nuclear material.

Section 23-1.3-7 of the 1976 Rhode Island Radiation Control Act authorizes the Governor, on behalf of the State, to enter into an agreement with the NRC which would provide a discontinuance of certain responsibilities of the NRC relating to ionizing radiation and the assumption of such responsibilities by the State. A copy of this legislation is contained in Appendix I.

History

Prior to 1960, radiation control activities were integrated with the other program activities of the Division of Occupational Health of the Rhode Island Department of Health. About that time radiological health was recognized as an area of concern requiring a set of special program activities within the Division. The development of these activities generally has paralleled that of other states with the important exception that comprehensive radiation control legislation was not adopted until 1976.

In the early 1960's emphasis was placed upon personnel training in radiological health through attendance at U.S. Public Health Service courses. A state Industrial Code relating to Occupational Radiation Protection was adopted in June 1964. In response to the requirements of this Code, a registration of radiation sources was conducted and completed during 1965. Radiation protection surveys of x-ray facilities and facilities utilizing Radium began at this time. An environmental radiation surveillance network was established by the Division during the early 1960's to measure fallout and has provided continuous data since that time. The need for radiological emergency response capability was recognized with the occurrence of a criticality accident in the state in 1964 which resulted in one radiation death. The Division has cooperated with other agencies to provide this capability and is presently engaged in updating the State Emergency Response Plan.

The Division has been actively representing the State of Rhode Island as a member of the Conference of Radiation Control Program Directors, (CRCPD), and the New England Radiological Health Committee, (NERHC), since their inceptions. Both organizations bring together state and federal agencies for cooperative efforts toward reduction of radiation exposure.

Radioactive material users have been provided assistance with hazards evaluations and reduction upon request. These services have been available to and utilized by Nuclear Regulatory Commission licensees as well as users of naturally occurring and accelerator produced radioactive materials (NARM). Division personnel have taken every opportunity to accompany NRC inspectors in order to become familiar with problems uncovered in Rhode Island and procedures used for inspections and compliance.

Environmental radiation issues with which this Division has been involved include: monitoring and assessment of the impact of radioactive fallout from nuclear weapons testing; monitoring and assessment of off-site impact of effluents from facilities utilizing large quantities of special nuclear materials; review of environmental reports and safety analysis reports submitted to support applications for EPA permits and NRC licenses; monitoring and assessment of levels of radioactivity in public, community, and private drinking water supplies; and assistance to other state agencies when environmental radiation issues arise.

Medical and dental radiography presents by far the largest man-made source of ionizing radiation exposure to the state's population. As a result, programs to reduce this exposure have been given priority over the years. Early programs emphasized physical surveys to encourage voluntary compliance with NCRP recommendations for equipment and structural shielding. In 1968 emphasis shifted somewhat to programs designed to lower patient dose through user assistance. At that time a program was developed and implemented by which dental exposures could be normalized to provide optimum diagnostic quality at minimum patient exposure.

This Rhode Island program described in an article published in the American Journal of Public Health in August 1970 (contained in Appendix VIII) became the basis for the Dental Exposure Normalization Technique (DENT) program sponsored by the Federal Food and Drug Administration's Bureau of Radiological Health (BRH, FDA). Under their sponsorship, DENT has since been implemented by most states. The Division has also conducted Technique Normalization programs for mammography, and for podiatric, chiropractic, and cephalometric x-ray procedures. In later years the quality assurance aspects of these programs have received special attention.

In 1975 the Division began its participation in the Nationwide Evaluation of X-Ray Trends (NEXT) program sponsored by CRCPD and BRH, FDA. A stratified random sample of 100 x-ray facilities was chosen and surveyed under this program. The results, including mean exposures for Rhode Island for various routine radiographic procedures, were published in the Rhode Island Medical Journal in 1978, and this paper is included in Appendix VIII. The Division continues to utilize the NEXT program in its x-ray control effects.

During 1976 it was decided by the State's Legislature that comprehensive legislation and regulations for control of radiation were necessary and desirable in Rhode Island to accomplish further reductions in population exposure to radiation. The State Radiation Control Act, Title 23, Chapter 1.3. of the General Laws was enacted in May 1976. Acting in accordance with this legislation, the Director of Health designated the renamed Division of Occupational Health and Radiation Control as the State Radiation Control Agency and designated the current Chief of that Division as the Agency's Administrator. The Director also appointed the eleven-member Radiation Advisory Commission as provided by the legislation.

Regulations for x-ray facilities, which are modeled after the Suggested State Regulations for Control of Radiation, were drafted by the Agency and reviewed by the Radiation Advisory Commission. After a

public hearing in accordance with the State's Administrative Procedures Act, the Agency's first regulations were adopted in June 1978. These regulations provide for annual registration of all x-ray facilities and certain services to x-ray facilities. The initial registration was completed in September 1978. Inspection of x-ray facilities on a scheduled basis for compliance with regulations began shortly thereafter.

The State Radiation Control Act also provides the authority for the Governor to enter into an Agreement for the assumption of certain licensing and inspection functions of NRC. In December 1978, regulations were adopted to facilitate the transition of authority form NRC to the State Radiation Control Agency. These regulations become effective on the date of an Agreement.

Organization, Functions, and Responsibilities.

The Rhode Island Department of Health was established in April 1878, under Section 23 of the General Laws of Rhode Island. This department is responsible for promoting and protecting the health of the people of Rhode Island by:

(1) formulating policy and providing leadership and coordination of health services;

(2) directing the planning, regulation, and development of health resources; and

(3) providing personal and environmental health services.

The act creating the state Board of Health established a six-member board to make investigations into the causes of diseases, especially epidemics and endemics among the people, the sources of mortality, and the effects of localities, employments, conditions, and circumstances on the public health. Subsequent legislation setting up individual divisions within the Health Department delegated the responsibility for promulgating rules and regulations to each individual division.

The Department has four Associate Directors with board program responsibilities in: (1) Management and Support Services, (2) Health Planning and Development, (3) Preventative Medicine, and (4) Community Health Services. A chart showing the present organization of the Department of Health is contained in Appendix II.

Funding for the Department is both state and federal. Federal Block Grants are used to fund many of the Health Department programs, but specific federal grants are also employed (e.g., Drinking Water Program). Funding for the Radiation Control Agency is 22% federal and 78% state and has the services of one assignee from the Bureau of Radiological Health.

Under the Radiation Control Act, a Radiation Advisory Commission consisting of 11 members was established. The commission members are appointed by the Director of Health and include persons representing engineering, diagnostic radiology, nuclear medicine, dentistry, veterinary medicine, industrial radiation protection, and radiologic technology. Appendix III lists the membership of the present commission. It is the duty of the commission to advise the Agency on technical matters relating to radiation. The Radiation Control Agency has authority to regulate the use of all sources of ionizing radiation, except those which it may exempt or are under the jurisdiction of the Federal Government. A chart showing the organization of the Radiation Control Agency is shown in Appendix II.

All members of the Agency have experience in health physics and have specialized training in this field. Professional staff including both new personnel and existing personnel will attend NRC training courses to attain and maintain a high level of technical competency. Members also have experience in operating laboratory and survey equipment. Responsibilities, job descriptions, background, and experience of radiation control personnel are given in Appendix IV.

The Supervising Radiation Control Specialist in charge of the Radioactive Materials Section will be responsible for licensing, inspections, investigations into incidents,and response to emergencies involving radioactive materials. It is anticipated that he will spend half of his time on the agreement program. The Administrator of the Radiation Control Agency (the Chief of the Division of Occupational Health and Radiation Control) will review and sign licenses and will review all inspection reports. His time on the agreement program will amount to a tenth of a man-year. Other members of the Radiation Control staff will also participate in the agreement program such that the total staff commitment will be one man-year. These breakdowns are further quantified in the budget contained in Appendix VII.

Rhode Island is an OSHA Consultation State and not an Enforcement State; therefore, it is not anticipated that the activities of the Occupational Health Section will impact on the Radioactive Materials Section.

Scope of Activities

The Radiation Control Agency administers the regulatory program associated with licensing of radioactive materials and registration of radiation-producing machines, environmental surveillance, special projects, and response to emergency situations involving sources of radiation. Chapters 18 and 18A of the state health plan, included in Appendix IX, detail the objectives and methods of the Division.

Within the State of Rhode Island there are 1,520 registered x-ray machines: 827 dental units, 631 medical units, and 62 industrial x-ray units. The number of NRC licenses within the State of Rhode Island as of December 31, 1978 was 49.

It is anticipated that the State will assume approximately 45 of these licenses. The number of facilities using radium sources is estimated at 10, and most of these are hospitals presently under NRC license. Three linear accelerators are in use for radiation therapy, and three small particle accelerators are in use at local universities.

Regulatory Procedures and Policy

Licensing and Registration

The Radiation Control Act requires licensing of all radioactive materials and registration of all radiation-producing machines except such sources as may be specifically exempted by regulations. License fees will be charged in accord with the schedule contained in Appendix III.

Licensing procedures, as provided in Parts A and C of the Rhode Island Rules and Regulations for the Control of Radiation, are consistent with those of the NRC. The license applications and form contained in Appendix V will be used in conjunction with Licensing and Regulatory Guides provided by the NRC.

General licenses are provided by regulation without filing an application with the Agency or the issuance of a licensing document. General licenses will be issued for specified materials under specified conditions when it is determined that the issuance of specific licenses is not necessary to protect the public and occupational health and safety. Specific licenses or amendments thereto will be issued upon review and approval of an application. A specific license will be issued only to named persons or facilities under the supervision of named persons and will incorporate appropriate conditions and expiration date. Pre-licensing inspections will be conducted when appropriate.

The Agency will request the advice of the Radiation Advisory Commission, or appropriate members thereof, with respect to any matter pertaining to a medical license application, or to criteria for reviewing applications.

All applications for non-routine medical uses of radioactive materials will be referred to the Radiation Advisory Commission for advice and consultation. Appropriate research protocols will be required as part of an application. The Agency will maintain knowledge of current developments, techniques, and procedures for medical uses applicable to the licensing program through continuing contact and information exchange with the NRC, other agreement states, and the medical profession.

The registration program for radiation-producing machines will continue, and the use of naturally occurring and accelerator produced radionuclides will now be licensed.

Inspection

The Agency is presently initiating an inspection and compliance program for x-ray equipment registrants which is similar to the proposed inspection and compliance program for radioactive materials.

Inspections for the purpose of evaluating radiation safety and determining compliance with appropriate regulations and provisions of licenses will be conducted as scheduled or in response to requests of complaints. Inspection frequency will be based upon the extent of the potential hazard and experience with the particular facility. Inspection priorities may be changed on a case-by-case basis consistent with current NRC practices. It is anticipated that state inspections of licensed facilities will be conducted in

accordance with a priority schedule similar to that shown as follows:

Priority	Type of License	Inspection frequency
I	Broad medical, broad academic, industrial radiography.	6 mos. or less
II	Industrial	1 yr. or less
III	Academic, medical, civil defense	1 yr. or less
IV	Limited medical, limited industrial	2 yrs. or less
V	Generally licensed devices	As required

Inspections will be made by pre-arrangement with the licensee or may be unannounced as the Agency determines to be most constructive. Written inspection procedures provided by the NRC will be followed in conducting the inspections and preparing reports.

The Rhode Island Radiation Control Agency has personnel trained in regulatory practices and procedures. Additionally, Agency personnel have accompanied NRC compliance inspectors on field inspections to gain a higher degree of competence in evaluating radiation safety and determining compliance with appropriate regulations and license provisions. Inspections will include the observation of pertinent facilities, operators, and equipment; a review of pertinent records and of radioactive materials—all as appropriate to the scope of the activity, conditions of the license and applicable regulations. In addition, independent measurements will be made, as appropriate.

At the start and conclusive of an inspection, personal contact will be made at management level whenever possible. Following the inspection, results will be discussed with management. Prompt investigations and reports will be made of all reported or alleged incidents to determine the cause, the steps taken for correction, and the prevention of similar incidents in the future.

Compliance and enforcement

Compliance with regulations and license conditions will be determined by inspections and evaluation of inspection reports. When there are items of non-compliance, the licensee or registrant will be informed at the time of inspection as follows:

(1) When the items are minor and the licensee or registrant agrees at the time of inspection to correct them, written inspection findings will be prepared which will list the items of non-compliance, confirm any corrections made during the inspection, and require acknowledgement by the person interviewed. The licensee or registrant will be informed that a review of any corrective action items will be conducted at the time of the next regular inspection or by a reinspection.

(2) When the non-compliance is considered serious, the person interviewed will be informed at the time of inspection. Written inspection findings will be sent to the licensee or registrant which will list the items of non-compliance and require a response within 20 days including proposed corrective action and an estimated date of completion of the corrective action.

(3) If no reply is received to the initial letter within the specified time, a Notice of Violation is issued. This Notice of Violation, mailed to management, will require a written Consent Agreement including proposed corrective action and an estimated date of completion of the corrective action. If considered appropriate, an unannounced reinspection will be made shortly after the estimated date of completion.

(4) Continued non-compliance as determined by the reinspection or by failure to reply within 10 days of the Notice of Violation will necessitate an Order of Abatement from the Agency. Such formal proceedings will follow the procedures contained in A.7.2 of the Rules and Regulations for the Control of Radiation.

The Agency uses its best efforts to attain compliance through cooperation and education prior to initiating formal legal procedures such as the Notice of Violation and Order of Abatement.

Upon request by a licensee, or upon the determination by the Agency, the terms and conditions of a license may be amended, consistent with the Act or regulations, to meet changing conditions in operations or to remedy technicalities of non-compliance.

Effective Date of Licensee Transfer

Any person who possesses a license for agreement materials issued by the NRC, on the effective date of the agreement with the NRC, shall be deemed to possess a like license issued by the Agency, which shall expire either 90 days after the receipt from the Agency of a notice of expiration of such license, or on the date of expiration specified in the federal license, whichever is earlier.

Administrative Procedures and Judicial Review

The basic standards of procedures for administrative agencies in the State of Rhode Island are set forth in 42–35 of the General Laws of Rhode Island found in Appendix I. The Agency shall follow this law and the Radiation Control Act with respect to hearings, issuance of orders, and judicial review of findings.

Compatibility and Reciprocity

In promulgating the present Rules and Regulations for the Control of Radiation, the Agency has, insofar as practicable, maintained compatibility with NRC and agreement state regulations; has avoided requiring dual licensing and has provided for reciprocal recognition of other agreement states and federal licenses.

Through these regulations the State has adopted radiation protection standards and will strive to maintain compatibility with NRC and other Agreement States. The Agency will also cooperate with NRC and other Agreement States in interchanging information and statistics relating to control of radioactive materials.

Coordination with the Department of Environmental Management

The Department of Environmental Management is the department responsible for environmental protection within the state. The state laws governing hazardous waste, air pollution, and water pollution are included in Appendix I, and the memoranda of understanding from the three divisions involved are contained in Appendix X.

The Division of Land Resources will not issue a permit for a low level radioactive waste burial site until a license has been issued by the Radiation Control Agency. Presently the Division of Air Resources does not have any air quality standards for radioactive air pollutants, and in the absence of any guidance from the United States Environmental Protection Agency (EPA), the division does not plan to regulate such materials.

The Division of Water Resources does not issue EPA water discharge permits, but they do certify the adequacy of the applications. In their review they will assure that all discharges meet the standards contained in Appendix A. Table II, Column II of the Rhode Island rules and regulations.

Radiation Laboratory Services

The Radiation Control Agency has the capability of evaluating samples collected during routine inspections and for making independent measurements. In addition to the survey instruments listed in Appendix VI, the Division has a large variety of air sampling equipment for industrial hygiene surveys including portable air sampling pumps for filters and charcoal cartridges, smoke tubes, and a velometer. If the need for a neutron survey meter arises, one can be borrowed from the University of Rhode Island. All survey instruments used for inspection and emergency response will be calibrated quarterly as per NRC State Agreements—Division III Information Notice H.2.

The Division of Laboratories has capabilities of gamma spectroscopy and gross alpha-beta counting of environmental samples. For more sophisticated non-routine evaluations, samples will be sent to the EPA lab in Montgomery, Alabama.

Emergency Response

The Rhode Island Radiation Control Agency has technically trained personnel and specialized equipment to investigate and evaluate incidents involving ionizing radiation. The Agency continues to prepare for such response by providing the following:

(1) trained staff for advisement required to meet any given situation;

(2) trained and equipped staff for emergency field activities;

(3) transportation by automobile to site of incident;

(4) established liaison with appropriate NRC and DOE Operations Offices; and

(5) training to key personnel of other state/local agencies.

Radiological assistance in the form of monitoring, liaison with appropriate authorities, and recommendations for area security and cleanup are provided by the Agency. The contamination guides used by the Agency are in Table III of the Protective Action Guides contained in Appendix XI. All Agency personnel will be maintained at an operation-ready level of training. Part of this training will be provided through cooperation of the NRC in Las Vegas, Nevada.

The Annex C Nuclear Accident or Incident Control Plan presently being revised by the State Civil Defense Preparedness Agency (DCPA) is included in Appendix XI. This plan addresses both transportation accidents and off-site releases from fixed facilities. It requires that the State Police first notify DCPA which in turn notifies the Radiation Control Agency. It is the responsibility of the Agency to advise the DCPA the extent of the hazard to the public health and safety and recommend protective actions as necessary. All licensees will be given copies of the plan and instructed in proper reporting of incidents which occur outside of their facility.

[FR Doc. 79-20067 Filed 6-28-79; 8:45 am]
BILLING CODE 7590-01-M

OFFICE OF PERSONNEL MANAGEMENT

Privacy Act of 1974; Proposed New System of Records

AGENCY: Office of Personnel Management.

ACTION: Proposed new system of records.

SUMMARY: The Office of Personnel Management published (44 FR 30836 et seq.) fourteen Central Notices of Systems of Records, identified as OPM/CENTRAL-1 through OPM/CENTRAL-14. The purpose of this notice is to propose a fifteenth Central system, identified as OPM/CENTRAL-15, Senior Executive Service (SES) Records.

COMMENT DATE: Any interested party may submit written comments regarding this proposal. To be considered, comments must be received on or before August 6, 1979.

ADDRESS: Address comments to the Associate Director for Executive Personnel and Management Development, Office of Personnel Management, 1900 E Street, N.W., Washington, D.C. 20415. Comments received will be available for public inspection at the above address from 9 a.m. to 4 p.m., Monday through Friday.

FOR FURTHER INFORMATION CONTACT: Anne A. Andrews, Executive Personnel and Management Development (202) 632-6820.

SUPPLEMENTARY INFORMATION: Under the provisions of the Civil Service Reform Act of 1978, Pub. L. 95-454, the Office of Personnel Management is required to prescribe regulations implementing the Senior Executive Service (SES) and, during the five year period beginning with the effective date of the SES, referred to in Section 415 (b)(1) of the Act, to submit to Congress reports on the SES. These reports include: information on the number of SES positions, in the aggregate and by agency; the number of career and non-career appointees, in the aggregate and by agency; the position titles and descriptions of SES positions for the current fiscal year; a description of each exclusion of an agency or component thereof from coverage under the SES; statistical figures on types of appointees and percentages of incumbents per pay rate; distribution and amounts of performance awards; conversions of career reserved positions to general positions and vice versa; and any other such information as the Office considers appropriate.

To provide the Office with the necessary data upon which decisions affecting its issuance and maintenance of implementing regulations are based and to serve as the basis of the contents of required reports to Congress, it is necessary to maintain certain specific records on current and former appointees to SES positions. The maintenance of these records in an individually identifying format is necessary for effective oversight of the impact of Office regulations through longitudinal studies, surveys, and the use of research questionnaires. Additionally, because of the Office's role in determining managerial qualifications of career civil service applicants and in receiving applications for placement in the SES under the provisions of 5 U.S.C. 3593(b) (reinstatement in the SES), individually identifiable records must also be retained.

This proposed new system of records identifies those necessary records that the Office has determined will be in the system. The collection of race and ethnic data on covered individuals is for statistical uses only, and no such data will be disclosed by individuals.

This system contains only those records on covered individuals that are in the physical posession of the Office. A Report on New Systems has been submitted to OMB and Congress concurrent with this notice. No waiver of the 60-day advance notice period has been requested for this system and, therefore, this system, as proposed, will become effective on September 4, 1979, unless comments received necessitate changes. Until this system is adopted, those SES records which are submitted before, on, or after July 13, 1979, are considered to be covered by the former Civil Service Commission System, CSC-3, Executive Assignment and Inventory Records.

The complete text of the system notice appears below.

Beverly M. Jones,
Issuance System Manager.

OPM/CENTRAL-15

SYSTEM NAME:

Senior Executive Service Records.

SYSTEM LOCATION:

Associate Director for Executive Personnel and Management Development, Office of Personnel Management, 1900 E Street, N.W., Washington, D.C. 20415.

CATEGORIES OF INDIVIDUALS COVERED BY THE SYSTEM:

Current and former appointees in the Senior Executive Service and civil service applicants for such positions whose applications have been submitted to OPM for a determination of executive (managerial) qualifications.

CATEGORIES OF RECORDS IN THE SYSTEM:

These records include:

a. Demographic, appointment, and assignment information (e.g., name, date of birth, Social Security Number, race and ethnic designation, title of position, pay rate, and type of appointment);

b. Background data on work experience, educational experience, publications or awards, and career interests;

c. Determinations on nominees for Meritorious and Distinguished Executive ranks;

d. Determinations concerning executive (managerial) qualifications (i.e., Qualification Review Board records);

e. Information relating to participants (current and former) in the sabbatical leave program (e.g., dates of participation and reasons for);

f. Applications from individuals who, within the 90-day period provided for under 5 U.S.C. 3593(b), seek reemployment in the Senior Executive Service;

g. Information concerning the reason(s) why an individual leaves the SES (e.g., to enter private industry, to work for a State Government, or removed during probation or after, because of performance); and

h. Information about the recruitment of individuals for SES positions (e.g., recruited from another Federal agency or from outside the Federal service).

AUTHORITY FOR MAINTENANCE OF THE SYSTEM:

Sections 401 through 415 of the Civil Service Reform Act of 1978, Pub. L. 95-454.

PURPOSE:

These records are used to: (1) assist the Office in carrying out its responsibilities under title 5, United States Code, and Office rules and regulations promulgated thereunder, with regard to the Senior Executive Service; (2) provide data used in policy formulation program planning, research studies, and statistical reports regarding the Government-wide SES program; and (3) locate individuals for personnel research.

Race and ethnic data are collected for statistical uses only.

ROUTINE USES OF RECORDS MAINTAINED IN THE SYSTEM, INCLUDING CATEGORIES OF USERS AND THE PURPOSES OF SUCH USES:

These records and information in these records may be used:

a. To identify and refer qualified current or former Federal employees to Federal agencies for vacancies in the Senior Executive Service.

b. To refer qualified current or former Federal employees or retirees to State and local Governments and international organizations for employment consideration.

c. To provide an employing agency with extracts from the records of that agency's employees in the system.

d. To provide information required in the annual report to Congress mandated by 5 U.S.C. 3135 and elsewhere, regarding positions in the SES and the incumbents of these positions.

e. To provide information to a congressional office from the record of an individual in response to an inquiry from the Congressional office made at the request of the individual.

f. By the Office of Personnel Management in the production of summary descriptive statistics and analytical studies in support of the function for which the records are collected and maintained, or for related work force studies. While published studies do not contain individual identifiers, in some instances the selection of elements of data included in the study may be structured in such a way as to make the data individually identifiable by reference.

g. To disclose information to the appropriate Federal, State, or local agency responsible for investigating, prosecuting, enforcing, or implementing a statute, rule, regulation, or order, where the disclosing agency become aware of an indication of a violation or potential violation of civil or criminal law or regulation.

h. To the National Archives and Records Service (General Services Administration) for records management inspections conducted under authority of 44 U.S.C. 2904 and 2906.

i. To disclose information to another Federal agency or to a court when the Government is party to a judicial proceeding before the court.

j. To disclose, in response to a request for discovery or for appearance of a witness, information that is relevant to the subject matter involved in a pending judicial or administrative proceeding.

k. To disclose information to officials of: the Merit Systems Protection Board, including the Office of the Special Counsel; the Federal Labor Relations Authority and its General Counsel; or the Equal Employment Opportunity Commission when requested in performance of their authorized duties.

POLICIES AND PRACTICES FOR STORING, RETRIEVING, ACCESSING, RETAINING, AND DISPOSING OF RECORDS IN THE SYSTEM:

STORAGE:

Records are maintained in file folders, and on magnetic disk and tape, punched cards, and microfiche.

RETRIEVABILITY:

Records are retrieved by the name and social security number of the individual to whom they pertain.

SAFEGUARDS:

Manual records are maintained in lockable metal filing cabinets or in a secured room with access limited to those whose official duties require access. Access to the computerized records is limited to those whose official duties require access. Access to race and ethnic data is restricted to specially designated OPM personnel.

RETENTION AND DISPOSAL:

Records are retained indefinitely.

SYSTEM MANAGER AND ADDRESS:

Associate Director for Executive Personnel and Management Development, Office of Personnel Management, 1900 E Street, NW., Washington, D.C. 20415.

NOTIFICATION PROCEDURE:

Individuals wishing to inquire whether this system of records contains information about them should contact the System Manager indicated above. Individuals must furnish the following information for their records to be located and identified:

a. Full name.

b. Social Security Number.

RECORD ACCESS PROCEDURES:

Individuals wishing to request access to records about themselves should contact the System Manager indicated above. Individuals must furnish the following information for their records to be located and identified:

a. Full name.

b. Social Security Number.

An individual requesting access must also follow the Office's Privacy Act regulations regarding access to records and verification of identity (5 CFR 297.203 and 297.201).

CONTESTING RECORD PROCEDURES:

Individuals wishing to request amendment of their records should contact the System Manager indicated above. Individuals must furnish the following information for their records to be located and identified:

a. Full name.

b. Social Security Number.

An individual requesting amendment must also follow the Office's Privacy Act regulations regarding amendment of records and verification of identity (5 CFR 297.208 and 297.201).

RECORDS SOURCE CATEGORIES:

Information is provided by the individual named in the record, his or her employing agency, and is also obtained from official documents of the Office.

[FR Doc. 79-20536 Filed 7-5-79; 8:45 am]
BILLING CODE 6325-01-M

THE PRESIDENT'S ADVISORY COMMITTEE FOR WOMEN

Meeting

Correction

In FR Doc. 79-20289 appearing on page 38032 in the issue for Friday, June 29, 1979, the seventeenth line of text should read, "1. Closed Business Meeting—(9-10:15 a.m. 7/"

BILLING CODE 1505-01-M

PRESIDENT'S COMMISSION ON THE ACCIDENT AT THREE MILE ISLAND

Amended Notice of Meetings

In accordance with the Federal Advisory Committee Act (Public Law 92-463), amended announcement is made of the following meetings:

Name: President's Commission on the Accident at Three Mile Island.

Place: Washington, D.C., Georgetown University, Hall of Nations, The Edmund Walsh Building (36th Street, N.W., between N and Prospect Streets, N.W.)

Time: Wednesday, July 18, 10:00 a.m.—2:00 p.m.; Thursday, July 19, 10:00 a.m.—2:00 p.m.; Friday, July 20, 10:00 a.m.—2:00 p.m.

Proposed Agenda:

I. Testimony of Witnesses

II. Briefing Sessions
III. Discussion of issuance of *subpoenas ad testificandum* and *duces tecum.*

The Commission was established by Executive Order 12130 on April 11, 1979, to conduct a comprehensive study and investigation of the accident involving the nuclear power facility on Three Mile Island in Pennsylvania.

Upon completion of the receiving of testimony and any other business on July 18 and 19, 1979 and for a period of time on July 17, 1979, the Commission will go into closed sessions for staff briefings on the conduct and status of its investigation and on the presentation of documents and oral testimony at the public hearings. Upon completion of the receiving of testimony and any other business on July 20, 1979, the Commission will go into closed session to discuss issuance of *subpoenae* for subsequent meetings.

These meetings will be held pending notification and approval by GSA Administrator.

Except for these designated closed sessions, the meetings are open to the public. Inquiries should be addressed to Barbara Jorgenson (202/653-7677).

Barbara Jorgenson,
Public Information Director.
July 2, 1979.
[FR Doc. 79-20841 Filed 7-5-79; 8:45 am]
BILLING CODE 6820-AJ-M

SECURITIES AND EXCHANGE COMMISSION

[Administrative Proceeding File No. 3-5734; File No. 81-489]

Aguirre Co.; Application and Opportunity for Hearing

June 28, 1979.

Notice is hereby given that Aguirre Company (the "Applicant") has filed an application pursuant to Section 12(h) of the Securities Exchange Act of 1934, as amended (the "1934 Act"), for an order exempting Applicant from the provisions of Sections 13 and 15(d) of the 1934 Act.

The Applicant states, in part:

1. On December 14, 1978, Applicant's shareholders approved a plan of liquidation of Applicant's assets.

2. The Applicant has filed with the Commission a Form 8-K which reflects the shareholder approval of the plan of liquidation, a Form 10-Q which reflects the progress of the liquidation, and an affiliate, Aguirre Corporation of Puerto Rico, has undertaken to update the progress of the liquidation in its periodic reports.

Applicant argues that the granting of the exemption would not be inconsistent with the public interest or the protection of investors.

For a more detailed statement of the information presented, all persons are referred to said application which is on file in the offices of the Commission at 1100 L Street, N.W., Washington, D.C. 20549.

Notice is further given that any interested person not later than July 23, 1979, may submit to the Commission in writing his views or any substantial facts bearing on this application or the desirability of a hearing thereon. Any such communication or request should be addressed: Secretary, Securities and Exchange Commission, 500 North Capitol Street, N.W., Washington, D.C. 20549, and should state briefly the nature of the interest of the person submitting such information or requesting the hearing, the reason for such request, and the issues of fact and law raised by the application which he desires to controvert. At any time after said date, an order granting the application may be issued upon request or upon the Commission's own motion.

For the Commission, by the Division of Corporation Finance, pursuant to delegated authority.

George A. Fitzsimmons,
Secretary.
[FR Doc. 79-20875 Filed 7-5-79; 8:45 am]
BILLING CODE 8010-01-M

[Release No. 10749; 812-4478]

American General Reserve Fund, Inc.; Filing of an Application

June 27, 1979.

Notice is hereby given that American General Reserve Fund, Inc. ("Applicant"), 2777 Allen Parkway, Houston, Texas 77019, registered under the Investment Company Act of 1940 ("Act") as an open-end, diversified management investment company, filed an application on May 18, 1979, and an amendment thereto on June 6, 1979, for an order of the Commission, pursuant to Section 6(c) of the Act, exempting Applicant from the provisions of Rules 2a-4 and 22c-1 under the Act to the extent necessary to permit Applicant to compute its net asset value per share, for the purpose of effecting sales, redemptions and repurchases of its shares, to the nearest one cent on a share value of one dollar. Applicant represents that in all other respects, its portfolio securities will be valued in accordance with the views of the Commission, set forth in Investment Company Act Release No. 9786 (May 31, 1977) ("Release No. 9786"). All interested persons are referred to the application on file with the Commission for a statement of the representations contained therein, which are summarized below.

Applicant represents that it is a "money market" fund designed as an investment vehicle for investors who seek to combine their assets to participate in a portfolio of money market instruments. According to the application, its investment objective is to seek protection of capital while earning high current income through investments in a portfolio of money market instruments generally maturing within one year, including marketable obligations issued or guaranteed by the U.S. Government or its agencies or instrumentalities, bank obligations, high grade commerical paper and other corporate obligations, and repurchase agreements ("Portfolio Securities").

Applicant states that since its inception in 1974 it has declared and paid dividends on a monthly rather than a daily basis. Applicant further states that for purposes of determining its per share net asset value, the value of Applicant's portfolio securities (including interest accrued but not collected) is divided by the number of shares outstanding. Portfolio securities for which market quotations are readily available are valued at the most recent bid price and if there are no quotations for a particular security it is valued based on market quotations for securities of similar yield, quality, and duration. Other investments and assets are valued at fair value as determined in good faith by or under direction of the Applicant's Board of Directors. Applicant declares all of its net investment income monthly and realized capital gains annually according to the application. All unrealized capital gains and losses and undistributed net income are reflected in Applicant's net asset value per share, which causes its net asset value per share and dividend rates to fluctuate.

Applicant further states that it believes that potential money market fund investors wish a money market fund to maintain a constant net asset value per share and to pay dividends which do not fluctuate on account of daily changes in the values of its portfolio assets. Applicant states that its Board of Directors has authorized a stock split of Applicant's common stock so that immediately following such stock split the net asset value per share of Applicant would be $1.00. Applicant asserts that it expects as a result of the

implementation of its proposal to round its net asset value per share to the nearest one cent on a $1.00 price, and that Applicant's price per share for the purpose of sales and redemptions will remain at $1.00.

Applicant states that its Board of Directors believe that this stock split and constant $1.00 per share price will benefit Applicant and its shareholders. Applicant states that it believes that potential investors prefer that the income dividends declared by Applicant reflect income as it is earned on a daily basis and that its sales and redemption price remain fixed. Applicant represents that its Board of Directors has, therefore, concluded that stability of capital and a steady flow of investment income would be of benefit to existing shareholders and a helpful tool in attracting potential investors to Applicant. Applicant asserts that its shareholders would achieve the convenience of being able to determine the value of their holdings simply by knowing the number of shares they own. Applicant further states that the task of maintaining an investment record would be made easier for Applicant's shareholders. According to the application the proposed change is expected to eliminate the periodic fluctuation in Applicant's net asset value per share which in the past has caused its shareholders to realize unwanted captial gains and losses upon redemption of their shares.

Rule 22c-1 under the Act provides, in pertinent part, that no registered investment company or principal underwriter thereof issuing any redeemable security shall sell, redeem, or repurchase any such security except at a price based on the current net asset value of such security which is next computed after receipt of a tender of such security for redemption or of an order to purchase or sell such security. Rule 2a-4 under the Act provides, as here relevant, that "current net asset value" of a redeemable security issued by a registered investment company used in computing its price for the purposes of distribution, redemption and repurchase shall be determined with reference to (1) current market value for portfolio securities with respect to which market quotations are readily available and (2) for other securities and assets, fair value as determined in good faith by the board of directors of the registered company. In Release No. 9786 the Commission issued an interpretation of Rule 2a-4 expressing its view that (1) it is inconsistent with the provisions of Rule 2a-4 for money market funds to value their assets on an amortized cost basis except with respect to portfolio securities with remaining maturities of 60 days or less and provided that such valuation method is determined to be appropriate by each respective fund's board of directors, and (2) it is inconsistent with the provisions of Rule 2a-4 for money market funds to "round off" calculations of their net asset value per share to the nearest one cent on a share value of $1.00, because such a calculation might have the effect of masking the impact of changing values of portfolio securities and therefore might not "reflect" such funds' proper portfolio valuation as required by Rule 2a-4. On the basis of the foregoing, Applicant submits that without an exemption from the provisions of Rule 2a-4 and 22c-1 under the Act, Applicant would be prohibited from determining its net asset value in the manner set forth above.

Section 6(c) of the Act provides, in part, that the Commission may, by order upon application, exempt any person, security or transaction, or any class or classes of persons, securities or transactions, from any provision or provisions of the Act or of any rule or regulation thereunder, if and to the extent that such exemption is necessary or appropriate in the public interest and consistent with the protection of investors and the purposes fairly intended by the policy and provisions of the Act.

Applicant submits that the requested exemption is appropriate in the public interest and consistent with the protection of investors and the purposes fairly intended by the policy and provisions of the Act. Applicant further asserts that a substantial number of money market funds now offer the public a stable $1.00 price for their shares. Applicant has agreed, in order to attempt to assure the stability of its price per share, that the order its seeks may be conditioned upon its adherence to the following conditions:

(1) Its Board of Directors, in supervising Applicant's operations and delegating special responsibilities involving portfolio management to its investment adviser, will undertake, as a particular responsibility within its overall duty of care owed to Applicant's shareholders, to assure to the extent reasonably practicable, taking into account current market conditions affecting the Applicant's investment objectives, that the Applicant's price per share as computed for purposes of distribution, redemption and repurchase, rounded to the nearest one cent will not deviate from $1.00;

(2) Applicant will maintain a dollar weighted average portfolio maturity appropriate to its objective of maintaining a stable price per share, and it will not (i) purchase a portfolio security with a remaining maturity of greater than one year, or (ii) maintain a dollar-weighted average portfolio maturity in excess of 120 days. In addition, to help maintain a $1.00 net asset value, and subject to approval by the Board of Directors of Applicant and unless particular circumstances dictate otherwise, portfolio securities having maturities of 60 days or less when purchased shall be valued at cost adjsted for amortization of premiums and accretions of discounts and that securities originally purchased with maturities in excess of 60 days shall be valued beginning on the 60th day prior to maturity using market quotations on the 61st day prior to maturity with unrealized appreciation or depreciation of the 61st day, if any, amortized or accreted to maturity. Portfolio securities having remaining maturities in excess of 60 days will be valued by the mark-to-market valuation method; and

(3) Applicant's purchases of portfolio securities, including repurchase agreements, will be limited to:

(a) U.S. Treasury Bills and other obligations issued or guaranteed as to interest and principal by the U.S. Government, its agencies and instrumentalities.

(b) Obligations of U.S. banks (including certificates of deposit and bankers' acceptances) having total assets at the time of purchase in excess of one billion dollars.

(c) Commercial paper which at the date of purchase is rated within the two highest grades by Standard & Poor's Corporation (A-1 or A-2) or by Moody's Investor Service (P-1 or P-2) or, if not rated, is issued by a company having an outstanding debt issue rated at least A by Standard & Poor's or Moody's.

(d) Repurchase agreements (agreements under which the seller agrees at the time of sale of a security to repurchase the security at an agreed time and price) for any security (but regardless of its maturity) in which the Applicant is permitted to invest; provided that such transactions are limited to transactions with U.S. banks (or a foreign branch or subsidiary thereof) having total assets of at least $500,000,000. In this regard, Applicant represents that its Board of Directors will limit the entering into of repurchase agreements by Applicant so that such repurchase agreements will only be entered into with financial institutions which are believed by Applicant's investment adviser to present minimum credit risk.

Notice is further given that any interested person may, not later than July 23, 1979, at 5:30 p.m., submit to the Commission in writing a request for a hearing on the application accompanied by a statement as to the nature of his interest, the reasons for such request and the issues, if any, of fact or law proposed to be controverted, or he may request that he be notified if the commission shall order a hearing thereon. Any such communication should be addressed: Secretary, Securities and Exchange Commission, Washington, D.C. 20549. A copy of such request shall be served personally or by mail upon Fidelity at the case of an attorney-at-law by certificate) shall be filed contemporaneously with the request. As provided by Rule 0-5 of the Rules and Regulations promulgated under the Act, an order disposing of the application herein will be issued as of course following said date unless the Commission thereafter orders a hearing upon request or upon the Commission's own motion. Persons who request a hearing, or advice as to whether a hearing is ordered, will receive any notices (if ordered) and any postponements thereof.

For the Commission, by the Division of Investment Management, pursuant to delegated authority.

George A. Fitzsimmons,

Secretary.

[FR Doc. 79-20332 Filed 7-5-79; 8:45 am]

BILLING CODE 8010-01-M

[File No. 81-303]

American Systems, Inc.; Application and Opportunity for Hearing

June 28, 1979.

Notice is hereby given that American Systems, Inc. ("Applicant") has filed an application pursuant to Section 12(h) of the Securities Exchange Act of 1934, as amended (the "1934 Act") for exemption from the provisions of Section 12(g) of the 1934 Act.

The Application states in part:

1. The level of business activity for the past two years has been negligible.

2. There is no indication the business activity will suddenly sharply increase.

3. The Company is developing new products which may or may not be successful and will take some time to develop into significant business activity.

4. The total assests of the Company are a little over $100,000.

5. The trading interest in the securities of the Compnay is very low, approximately 10 transactions a month.

6. The cost to the registrant of providing the required reports and documentation to the SEC is a burden on its ability to develop the business.

7. The Officers of the Company are now spending a disproportionate amount of their time on remaining up to date on registration requirements and preparing documents which are required.

For a more detailed statement of the information presented, all persons are referred to said application which is on file in the offices of the Commission at 1100 L Street, N.W., Washington, D.C. 20549.

Notice is further given that any interested person not later than July 23, 1979, may submit to the Commission in writing his views or any substantial facts bearing on this application or the desirability of a hearing thereon. Any such communication or request should be addressed: Secretary, Securities and Exchange Commisson, 500 North Capitol Street, N.W., Washington, D.C. 20549, and should state briefly the nature of the interest of the person submitting such information or requesting the hearing, the reason for such request, and the issues of fact and law raised by the application which he desires to controvert.

Persons who request a hearing or advice as to whether a hearing is ordered will receive any notices and orders issued in this matter, including the date of the hearing (if ordered) and any postponements thereof. At any time after said date, an order granting the application may be issued upon request or upon the Commission's own motion.

For the Commission, by the Division of Corporation Finance, pursuant to delegated authority.

George A. Fitzsimmons,

Secretary.

[FR Doc. 79-20378 Filed 7-5-79; 8:45 am]

BILLING CODE 8010-01-M

[File No. 81-535; Administrative Proceeding File No. 3-5748]

Ashland Oil Canada Ltd.; Application and Opportunity for Hearing

June 28, 1979.

Notice is hereby given that Ashland Oil Canada Limited (the "Applicant") has filed an application pursuant to Section 12(h) of the Securities Exchange Act of 1934, as amended, (the "1934 Act") for an order exempting it from the periodic reporting requirements under Section 15(d) of the 1934 Act.

The Applicant states,

(1) On April 18, 1979, as a result of stock purchases by Kaiser Resources Ltd., the Applicant no longer had any public security holders.

(2) Stockholders were given pertinent information concerning the Applicant and the Stock purchases in the Applicant's annual report on Form 10-K for fiscal year ended September 30, 1978, quarterly report on Form 10-Q for the period ending December 31, 1978, and proxies solicited in accordance with Regulation 14A of the 1934 Act.

For a more detailed statement of the information presented, all persons are referred to said application which is on file in the offices of the Commission at 1100 L Street, N.W., Washington, D.C. 20549.

Notice is further given that any interested person no later than July 23, 1979, may submit to the Commission in writing his views or any substantial facts bearing on this application or the desirability of a hearing thereon. Any such communication or request should be addressed: Secretary, Securities and Exchange Commission, 500 North Capitol Street, N.W., Washington D.C. 20549, and should state briefly the nature of the interest of the person submitting such information or requesting the hearing, the reason for such request, and the issues of fact and law raised by the application which he desires to controvert. At any time after said date, an order granting the application may be issued upon request or upon the Commission's own motion.

For the Commission, by the Division of Corporation Finance, pursuant to delegated authority.

George A. Fitzsimmons,

Secretary.

[FR Doc. 79-20377 Filed 7-5-79; 8:45 am]

BILLING CODE 8010-01-M

[Release No. 10750; (811-1008)]

The Capital Fund of America, Inc.; Filing of Application

June 27, 1979.

Notice is hereby given that The Capital Fund of America, Inc. ("Applicant") Two Embarcadero Center, P.O. Box 7650, San Francisco, California 94120, a Delaware corporation registered under the Investment Company Act of 1940 ("Act") as an open-end, diversified, management investment company, filed an application on January 22, 1979, and amendments thereto on January 31, 1979, and April 23, 1979, pursuant to Section 8(f) of the Act Rule 8f-1 thereunder, for an order of the Commission declaring

that Applicant has ceased to be an investment company as defined by the Act. All interested persons are referred to the application on file with the Commission for a statement of the representations contained therein, which are summarized below.

Applicant states that on December 16, 1960, it registered under the Act, and that on the same date it filed a registration statement pursuant to the Securities Act of 1933 with respect to 400,000 shares of its capital stock. Applicant further states that it commenced a public offering of its shares immediately after such registration statement was declared effective by the Commission on March 10, 1961. According to the application, on July 7, 1978, Applicant's board of directors approved an Agreement and Plan of Reorganization ("Agreement") between Applicant and New Perspective Fund, Inc. ("NPF"), a company registered under the Act as an open-end, diversified, management investment company, which provided for: (i) the acquisition of the assets and the assumption of the liabilities of Applicant by NPF in exchange for shares of NPF equal to the value of Applicant's net assets; (ii) the *pro rata* distribution of such shares of NPF stock to shareholders of Applicant according to their respective interests; and (iii) the dissolution of Applicant following the consummation of such transactions. The application states that on August 18, 1978, Applicant and NPF filed an application for an order, pursuant to Section 17(b) of the Act, exempting from the provisions of Section 17(a) of the Act the transactions contemplated by the Agreement, and that such order was granted on October 31, 1978 (Investment Company Act Release No. 10461). Applicant states that the Agreement was approved by the affirmative vote of the holders of more than a majority of its outstanding shares at a meeting held on October 31, 1978.

According to the application, on November 3, 1978, (i) the Agreement became effective, and Applicant and NPF filed the Agreement with the State of Delaware, and (ii) NPF acquired the assets and assumed the liabilities of Applicant in exchange for 14,460,210.809 shares of NPF with an aggregate value of $85,253,933.30. Applicant states that it has distributed such shares of NPF to Applicant's shareholders, who received 1.2772 shares of NPF in exchange for each share of Applicant.

Applicant states that: (i) no brokerage commissions were paid in connection with the acquisition; (ii) it distributed its final income dividend to shareholders on October 27, 1978; (iii) it and NPF were responsible for their own expenses in connection with the acquisition; and (iv) its expenses in connection with the acquisition were aproximately $50,000. According to the application, Applicant is not now engaged, and does not propose to engage, in any business activity other than that necessary to wind up its affairs.

Section 8(f) of the Act provides, in pertinent part, that when the commission, upon application, finds that a registered investment company has ceased to be an investment company, it shall so declare by order and upon the taking effect of such order the registration of such company under the Act shall cease to be in effect.

Notice is further given that any interested person may, not later than July 23, 1979, at 5:30 p.m., submit to the Commission in writing a request for a hearing on the matter accompanied by a statement as to the nature of his interest, the reason for such request, and the issues, if any, of fact or law proposed to be controverted, or he may request that he be notified if the Commission shall order a hearing thereon. Any such communication should be addressed: Secretary, Securities and Exchange Commission, Washington, D.C. 20549. A copy of such request shall be served personally or by mail upon applicant at the address stated above. Proof of such service (by affidavit or, in case of an attorney-at-law, by certificate) shall be filed contemporaneously with the request. As provided by Rule 0-5 of the Rules and Regulations promulgated under the Act, an order disposing of the application will be issued as of course following said date unless the Commission thereafter orders a hearing upon request or upon the Commission's own motion. Persons who request a hearing, or advice as to whether a hearing is ordered, will receive any notices and orders issued in this matter, including the date of the hearing (if ordered) and any postponements thereof.

For the Commission, by the Division of Investment Management, pursuant to delegated authority.

George A. Fitzsimmons,

Secretary.

[FR Doc. 79-20883 Filed 7-5-79; 8:45 am]

BILLING CODE 8010-01-M

[Rel. No. 21124; (70-6235)]

Central & South West Fuels, Inc.; Proposed Increases in Fuel Exploration and Development Budgets; Order Authorizing Budgets for Period Ending July 31, 1979

June 28, 1979.

In the Matter of Central and South West Fuels, Inc., P.O. Box 10773, Golden, Colorado 80401; Central Power and Light Company, P.O. Box 2121, Corpus Christi, Texas 78403; Public Service Company of Oklahoma, Ash Creek Mining Company, P.O. Box 201, Tulsa, Oklahoma 74102; Southwestern Electric Power Company, P.O. Box 21106, Shreveport, Louisiana 71156; West Texas Utilities Company, P.O. Box 841, Abilene, Texas 79604.

Notice is hereby given that Central Power and Light Company ("CPL"), Public Service Company of Oklahoma ("PSO"), Southwestern Electric Power Company ("SWEPCO") and West Texas Utilities Company ("WTU"), each an electric utility subsidiary company of Central and South West Corporation ("CSW"), a registered holding company, together with Central and South West Fuels, Inc. ("CSWF"), a fuel subsidiary of CPL, PSO, SWEPCO and WTU, and Ash Creek Mining Company ("Ash Creek"), a mining subsidiary of PSO, have filed with this Commission a post-effective amendment to their application-declaration previously filed and amended pursuant to the Public Utility Holding Company Act of 1935 ("Act"), designating Sections 9(a), 10, 12 and 13 of the Act and Rules 90-95 promulgated thereunder as applicable to the proposed transactions. All interested persons are referred to the application-declaration, as amended by said post-effective amendment, which is summarized below, for a complete statement of the proposed transactions.

By orders dated December 28, 1978, March 30, 1979, May 11, 1979, and May 31, 1979 (HCAR Nos. 20864, 20983, 21040 and 21071), applicants-declarants have been authorized fuel exploration and development budgets through the period ending June 30, 1979, in the following amounts: CSWF Coal, $2,350,000; CSWF Lignite, $8,776,000; CSWF Uranium, $1,271,000; CSWF Administrative; $684,000; CPL Oil and Gas, $4,895,000; PSO Oil and Gas, $12,070,000; and SWEPCO Oil and Gas, $3,281,000.

By post-effective amendment applicants-declarants request the following individual budget authorizations for the 15-month period

ending March 31, 1980 (in the cases of CPL, PSO and SWEPCO such amounts represent increases of 10% beyond the amounts as to which notice was previously issued in HCAR Nos. 20816 and 21046):

CSWF	$29,079,600
CPL	12,290,300
PSO	33,922,900
SWEPCO	5,968,600

The CSWF $29,079,600 budget authorization is composed as follows: coal projects, $4,189,000; lignite projects, $18,662,000; uranium projects, $2,017,000; administrative expenditures, $1,568,000; and contingency margin, $2,643,000 (a sum representing 10% of the total other budgeted expenditures). The CPL, PSO and SWEPCO budget authorizations of $12,290,300, $33,922,900 and $5,968,600, respectively, are for oil and gas exploration and development activities to be conducted by them unilaterally or with non-affiliated entities (and include a contingency margin of 10% of the other budgeted expenditures in each case).

There are no additional fees or expenses to be incurred in connection with the revised fuel budgets. It is stated that no state commission and no federal commission, other than this Commission, has jurisdiction over the fuel budgets.

Notice is further given that any interested person may, not later than July 25, 1979, request in writing that a hearing be held on such matter, stating the nature of his interest, the reasons for such request, and the issues of fact or law raised by said application-declaration, as amended by said post-effective amendment, which he desires to controvert; or he may request that he be notified if the Commission should order a hearing thereon. Any such request should be addressed: Secretary, Securities and Exchange Commission, Washington, D.C. 20549. A copy of such request should be served personally or by mail upon the applicants-declarants at the above-stated addresses, and proof of service (by affidavit or, in case of an attorney at law, by certificate) should be filed with the request. At any time after said date, the application-declaration, as amended by said post-effective amendment or as it may be further amended, may be granted and permitted to become effective as provided in Rule 23 of the General Rules and Regulations promulgated under the Act, or the Commission may grant exemption from such Rules as provided in Rules 20(a) and 100 thereof or take such other action as it may deem appropriate. Persons who request a hearing or advice as to whether a hearing is ordered will receive any notices and orders issued in this matter, including the date of the hearing (if ordered) and any postponements thereof.

It appearing that the application-declaration, as amended by said post-effective amendment, insofar as it proposes fuel budgets for applicants-declarants for the period July 1 through July 31, 1979, should be granted and permitted to become effective forthwith:

It is ordered, pursuant to the applicable provisions of the Act and Rules thereunder, that applicants-declarants be, and they hereby are, authorized fuel exploration and development budgets for the period July 1 through July 31, 1979, in the following individual amounts: CSWF Coal, $500,000; CSWF Lignite, $1,925,000; CSWF Uranium, $250,000; CSWF Administrative, $150,000; CPL Oil and Gas, $1,500,000; PSO Oil and Gas, $3,000,000; SWEPCO Oil and Gas, $300,000; subject to the terms and conditions prescribed in Rule 24 promulgated under the Act, except that certificates thereunder shall be filed quarterly.

For the Commission, by the Division of Corporate Regulation, pursuant to delegated authority.

George A. Fitzsimmons,

Secretary.

[FR Doc. 79-20370 Filed 7-5-79; 8:45 am]

BILLING CODE 8010-01-M

[File No. 81-507; Administrative Proceeding File No. 3-5747]

The Cross Co.; Application and Opportunity for Hearing

June 28, 1979.

Notice is hereby given that The Cross Company ("Applicant") has filed an application pursuant to Section 12(h) of the Securities Exchange Act of 1934, as amended (the "1934 Act") for an order granting Applicant an exemption from the provisions of Sections 13 and 15(d) of the 1934 Act.

The Applicant states, in part:

1. On February 9, 1979 Applicant merged with a wholly-owned subsidiary of Cross and Trecker Corporation and thereby itself became a wholly-owned subsidiary of Cross and Trecker Corporation. As a result of the merger, Applicant no longer has any publicly owned common stock.

2. The Applicant has filed with the Commission its proxy statement dated December 13, 1978, containing audited financial statements for the year ended September 30, 1978, plus a consolidated summary of operations of Applicant for the five years ended September 30, 1978.

3. The common stock of Cross and Trecker Corporation is registered with the Commission pursuant to Section 12(g) of the 1934 Act.

4. The results of the Applicant's operations for the fiscal year ended September 30, 1979 will be reflected in the Form 10-K and annual report to shareholders of Cross and Trecker Corporation for fiscal 1979.

In the absence of an exemption, Applicant is required to file reports pursuant to Sections 13 and 15(d) of the 1934 Act and the rules and regulations thereunder for the fiscal year ending September 30, 1979. Applicant believes that its request for an order exempting it from the reporting provisions of Sections 13 and 15(d) of the 1934 Act is appropriate in view of the fact that the Applicant believes that the time, effort and expense involved in the preparation of additional periodic reports will be disproportionate to any benefit to the public.

For a more detailed statement of the information presented, all persons are referred to said application which is on file in the offices of the Commission at 1100 L Street, N.W., Washington, D.C.

Notice is further given that any interested person not later than July 23, 1979 may submit to the Commission in writing his views or any substantial facts bearing on this application or the desirability of a hearing thereon. Any such communication or request should be addressed: Secretary, Securities and Exchange Commission, 500 North Capitol Street, N.W., Washington, D.C. 20549, and should state briefly the nature of the interest of the person submitting such information or requesting the hearing, the reason for the request, and the issues of fact and law raised by the application which such person desires to controvert. At any time, after said date, an order granting the application may be issued upon request or upon the Commission's own motion.

For the Commission, by the Division of Corporation Finance, pursuant to delegated authority.

George A. Fitzsimmons,

Secretary.

[FR Doc. 79-20030 Filed 7-5-79; 8:45 am]

BILLING CODE 8010-01-M

[File No. 81-522; Administrative Proceeding File No. 3-5762]

Cutler-Hammer, Inc.; Application and Opportunity for Hearing

June 28, 1979.

Notice is hereby given that Cutler-Hammer, Inc. ("Applicant") has filed an application pursuant to Section 12(h) of the Securities Exchange Act of 1934, as amended (the "1934 Act") for an order exempting Applicant from the provisions of Sections 13 and 15(d) of that Act.

The Applicant states, in part:

(1) The Applicant has become a wholly-owned subsidiary of Eaton Corporation as a result of the merger of the Applicant into new CHI, Inc., a wholly-owned subsidiary of Eaton.

(2) Pursuant to the merger, which was consummated on January 2, 1979, all shareholders of Applicant, have become security holders of Eaton, which is subject to the reporting requirements of the 1934 Act.

(3) All shares of Applicant's common stock are now owned by Eaton.

In the absence of an exemption, Applicant would be required to file a report on Form 10-K for the period ended December 31, 1978. Applicant believes that it is no longer in the public interest or necessary for the protection of investors to require it to continue to file the reports required by Sections 13 and 15(d) of the 1934 Act inasmuch as there is no trading in the Applicant's securities and all former shareholders of Applicant, have become security holders of Eaton.

For a more detailed statement of the information presented, all persons are referred to the application which is on file in the offices of the Commission at 1100 L St., N.W., Washington, D.C. 20549.

Notice is further given that any interested person, not later than July 23, 1979, may submit to the Commission in writing his views or any substantial facts bearing on this application or the desirability of a hearing thereon. Any such communication or request should be addressed to Secretary, Securities and Exchange Commission, 500 North Capitol Street, N.W., Washington, D.C. 20549, and should state briefly the nature of the interest of the person submitting such information or requesting the hearing, the reason for such request, and the issues of fact and law raised by the application which he desires to controvert. Persons who request a hearing or advice as to whether a hearing is ordered will receive any notices and orders issued in this matter, including the date of the hearing (if ordered) and any postponements thereof. At any time after said date, an order granting the application may be issued upon request or upon the Commission's own motion.

For the Commission, by the Division of Corporation Finance, pursuant to delegated authority.

George A. Fitzsimmons,

Secretary.

[FR Doc. 79-20981 Filed 7-5-79; 8:45 am]

BILLING CODE 8010-01-M

[Release No. 10751; (811-1770)]

The Dreyfus Leverage Fund, Inc.; Filing of Application

June 28, 1979.

Notice is hereby given that the Dreyfus Leverage Fund, Inc. ("Applicant"), (a Delaware corporation), 767 Fifth Avenue, New York, New York 10022, registered as an open-end diversified management investment company under the Investment Company Act of 1940 ("Act"), filed an application pursuant to Section 8(f) of the Act on May 1, 1979, for an order of the Commission declaring that Applicant has ceased to be an investment company as defined in the Act. All interested persons are referred to the application on file with the Commission for a statement of the representations set forth therein, which are summarized below.

Applicant was organized as a Delaware corporation and was registered under the Act on November 22, 1968. The application states that on December 19, 1973, Applicant's board of directors determined that it would be in the best interest of the Applicant and its stockholders to change Applicant's state of incorporation from Delaware to Maryland. In order to effect such reincorporation, Applicant and The Dreyfus Leverage Fund, Inc., a Maryland corporation, entered into an Agreement and Articles of Merger, which provided for the merger of Applicant with and into the Dreyfus Leverage Fund, Inc., a Maryland corporation. The application states that on March 1, 1974, there were 19,904,802 shares of capital stock outstanding, of which 11,303,644 shares voted in favor of the merger and 516,544 shares voted against it at a meeting held on April 30, 1974. Applicant states that under the terms of an Agreement and Articles of Merger, each share or fraction thereof of Applicant was converted into an equal number of whole or fractional shares of the Dreyfus Leverage Fund, Inc., a Maryland corporation.

Applicant also represents that on August 16, 1974 the Certificate and Agreement of Merger of the Applicant and the Dreyfus Leverage Fund, Inc., a Maryland corporation, was filed, and the corporate existence of the Applicant, The Dreyfus Leverage Fund, Inc. (a Delaware corporation), was terminated.

Applicant further states that Applicant does not hold any assets and does not have any debts or other liabilities which remain outstanding. The application states Applicant is not a party to any litigation or administrative proceeding and is not currently engaged in any business activities. Finally, Applicant states that Applicant does not have any security holders and that no security holders exist to whom distributions were incomplete.

Section 8(f) of the Act provides, in pertinent part, that when the Commission, upon application, finds that a registered investment company has ceased to be an investment company, it shall so declare by order and upon the effectiveness of such order, the registration of such company shall cease to be in effect.

Notice is further given that any interested person may, not later than July 23, 1979, at 5:30 p.m., submit to the Commission in writing a request for a hearing on the matter accompanied by a statement as to the nature of his interest, the reason for such request, and the issues, if any, of fact or law proposed to be controverted, or he may request that he be notified if the Commission shall order a hearing thereon. Any such communication should be addressed: Secretary, Securities and Exchange Commission, Washington, D.C. 20549. A copy of such request shall be served personally or by mail upon Applicant(s) at the address(es) stated above. Proof of such service (by affidavit, or in case of an attorney-at-law, by certificate) shall be filed contemporaneously with the request. As provided by Rule 0-5 of the Rules and Regulations promulgated under the Act, an order disposing of the application will be issued as of course following said date unless the Commission thereafter orders a hearing upon request or upon the Commission's own motion. Persons who request a hearing, or advice as to whether a hearing is ordered, will receive any notices and orders issued in this matter, including the date of the hearing (if ordered) and any postponements thereof.

For the Commission, by the Division of Investment Management, pursuant to delegated authority.

George A. Fitzsimmons,

Secretary.

[FR Doc. 79-20371 Filed 7-5-79; 8:45 am]

BILLING CODE 8010-01-M

[File No. 81-513; Administrative Proceeding File No. 3-5724]

Louis Sherry, Inc.; Application and Opportunity for Hearing

Notice is hereby given that Louis Sherry, Inc. ("Applicant") has filed an application pursuant to Section 12(h) of the Securities Exchange Act of 1934, as amended, (the "1934 Act") for an order exempting Applicant from the provisions of Section 13 and 15(d) of that Act.

1. On December 20, 1978, the Applicant was merged with and into Norin Corporation, a Delaware Corporation, which is a reporting Company under the 1934 Act.

2. As a result of the merger, the number of shareholders of Applicant has been reduced to one. The Applicant is now a wholly-owned subsidiary of Norin Corporation.

3. Applicant's registration under Section 12(g) of the 1934 Act was terminated March 1, 1979.

In the absence of an exemption, Applicant would be required to file a report on Form 10-K for the period ended August 31, 1979 and a report on Form 10-Q for the period ending June 30, 1979. Applicant believes that its request for an order exempting it from the reporting provisions of Sections 13 and 15(d) of the 1934 Act is appropriate, since it has no publicly held securities, there is no trading market for any of its securities, and the time effort and expense involved in preparation of the reports would be disproportionate to any benefit to the public.

For a more detailed statement of the information presented, all persons are referred to the application which is on file in the offices of the Commission at 1100 L St. N.W., Washington, D.C. 20549.

Notice is further given that any interested person, not later than July 23, 1979, may submit to the Commission in writing his views or any substantial facts bearing on this application or the desirability or a hearing thereon. Any such communication or request should be addressed to Secretary, Securities and Exchange Commission, 500 North Capitol Street, N.W., Washington, D.C. 20549, and should state briefly the nature of the interest of the person submitting such information or requesting the hearing, the reason for such request, and the issues of fact and law raised by the application which he desires to controvert. Persons who request a hearing or advice as to whether a hearing is ordered will receive any notices and orders issued in this matter, including the date of the hearing (if ordered) and any postponements thereof. At any time after said date, an order granting the application may be issued upon request or upon the Commission's own motion.

For the Commission, by the Division of Corporation Finance, pursuant to delegated authority.

George A. Fitzsimmons,

Secretary.

[FR Doc. 79-20373 Filed 7-5-79; 8:45 am]

BILLING CODE 8010-01-M

[Investment Company Act of 1940, Release No. 10753; (812-4453)]

Merrill Lynch, Pierce, Fenner & Smith, et al.; Filing of Application

June 29, 1979.

In the Matter of Merrill Lynch, Pierce, Fenner & Smith Inc., Bache Halsey Stuart Shields Inc., Dean Witter Reynolds, Inc., and The Mortgage-Backed Income Fund First Monthly Payment Series (A Unit Investment Trust) and Subsequent Series, c/o Merrill Lynch, Pierce, Fenner & Smith Incorporated, 125 High Street, Boston, Massachusetts 02110. Notice is hereby given that Merrill Lynch, Pierce, Fenner & Smith Incorporated, Bache Halsey Stuart Shields Incorporated, Dean Witter Reynolds Inc. ("Sponsors") and The Mortgage-Backed Income Fund, First Monthly Payment Series (a Unit Investment Trust) and subsequent Series ("Fund" or individually a "Series") (hereinafter the Sponsors and the Fund are sometimes collectively referred to as the "Applicants"), filed an application on February 13, 1979, and an amendment thereto on June 7, 1979, pursuant to Sections 6(c) and 11 of the Investment Company Act of 1940 ("Act") for an order of the Commission (1) exempting them from compliance with the initial net worth requirements of Section 14(a) of the Act; (2) exempting them from the provisions of Rule 19b-1 with regard to distribution of capital gains more than once in a taxable year; (3) exempting them during the initial offering period for each Series from that portion of Rule 22c-1 which requires that the value of net assets be determined as of the time of the close of trading on the New York Stock Exchange, Inc., and exempting them in secondary market trading from all provisions of Rule 22c-1; and (4) exempting them from the provisions of Sections 22(d) and 11(c) of the Act to the extent necessary to permit the exchange of units of any Series of the Fund for units of other Series of the Fund or for units of certain series of Municipal Investment Trust Fund, The Corporate Income Fund or The Government Securities Income Fund on the basis of a reduced fixed sales charge per unit. All persons are referred to the application on file with the Commission for a statement of the representations contained therein, which are summarized below.

The Mortgage-Backed Income Fund, First Monthly Payment Series (a Unit Investment Trust) and subsequent Series is a unit investment trust and is registered under the Act. The application states that each Series will be created under Massachusetts law by a trust indenture among the Sponsors, the Trustee (the Bank of New York), the Co-trustee (Shawmut Bank of Boston, N.A.) and the Evaluator (Interactive Data Services, Inc.). The portfolio of each Series will consist of mortgage-backed securities.

The Applicants state that, although the Sponsors are not obligated to do so, it is their intention to maintain a market for units of each Series and to offer to purchase such units at prices which are based upon the aggregate offering price of the securities in each Series. If the supply of units of any Series exceed demand, the Sponsors may discontinue purchases of such units at prices based on the offering prices of securities in the Series. In this event the Applicants state that the Sponsors may nonetheless purchase units, as a service to unitholders, at prices based on the current redemption prices for those units. However, if the Sponsors repurchase units in the secondary market at a price below the offering prices of securities in any Series, they will tender these units to the Trustee for redemption and will not resell these units in the secondary market. During the initial public offering period or thereafter while the Sponsors continue to maintain such market, on any given day the price offered by the Sponsors for the purchase of units of a Series shall be an amount not less than the unit value at which units of the Series may be redeemed, based on the aggregate bid prices of securities in the Series on the date on which the units are tendered for redemption.

In addition, the Applicants state the Sponsors intend to allow unitholders to exchange units of any Series for units of

certain series of Municipal Investment Trust Fund, The Corporate Income Fund or The Government Securities Income Fund and other Series of the Fund (the "Exchange Funds") on the basis of a reduced fixed sales charge per unit. The application states that the structures of the Exchange Funds and the various series are very similar in most respects to each other and to the Fund, but the investment objectives of the Exchange Funds are different. Applicants state that this exchange option (the "Exchange Option") would have the effect of providing unitholders of Series of the Fund with a convenient means of transferring interests as their investment requirements change into other series of the Exchange Funds, and would serve as an alternative to disposition of a unitholders's interest, either in the secondary market or through redemption. The Applicants state that the Sponsors intend to hold the Exchange Option open under most circumstances, but that they do, however, reserve the right to modify, suspend or terminate the Exchange Option at any time without further notice to unitholders.

Section 14(a)

Section 14(a) of the Act requires, in substance, that a registered investment company (a) have a net worth of at least $100,000 prior to making a public offering of its securities, (b) have previously made a public offering and at that time have had a net worth of $100,000 or (c) have made arrangements for at least $100,000 to be paid in by 25 or fewer persons before acceptance of public subscriptions with the condition that any amount so paid in, as well as any sales load, will be refunded to any subscriber on demand in the event the net proceeds so received do not result in the company's having a net worth of at least $100,000 within 90 days after its registration statement becomes effective.

The Applicants state that each Series, at the date of deposit of the underlying securities and before any unit is offered to the public, is intended to have a net worth, represented by the market value of the Securities on that date as determined by the Evaluator, in excess of $100,000. It is the contention of the Applicants that the proposed course of conduct of the Sponsors as described in the application, as well as the history of the Sponsors in the securities industry, demonstrates that each Series will be managed in a responsible way by responsible persons. The Applicants also contend that any requirement that the Sponsors invest in $100,000 or more of units of each Series under investment letters would only increase the cost to the Sponsors of marketing the units without creating any significant increase in the protection of unitholders. The Applicants also contend that each Series will have a net worth far in excess of $100,000 fully invested in securities on the date of deposit for each Series and will therefore fully comply with Section 14(a)(1).

In connection with their request for exemption from Section 14(a), the Applicants agree, as a condition to such exemption, that they will refund, on demand and without deduction, all sales charges to purchasers of units of any Series from the Sponsors or from any underwriter or dealer participating in the distribution, and liquidate the securities held by such Series and distribute the proceeds thereof, if, within 90 days from the time that the registration statement relating to the units of such Series shall have become effective under the Securities Act of 1933, the net worth of such Series shall be reduced to less than $100,000 or if such Series shall have been terminated. The Sponsors further agree to instruct the Trustee to terminate such Series in the event redemption by the Sponsors of units which have not been sold in the initial distribution thereof results in such Series having a net worth of less than 40% of the face amount of securities in its original portfolio, and in the event of any such termination the Sponsors will refund, on demand and without deduction, all sales charges to purchasers of units of such Series from the Sponsors or from any underwriter or dealer participating in the distribution. The Sponsors further agree that any future Sponsor will, as a condition to becoming a Sponsor, agree to the foregoing undertakings.

Rule 19b-1

Rule 19b-1(a), adopted pursuant to Section 19(b) of the Act, provides in substance that no registered investment company which is a "regulated investment company" as defined in Section 851 of the Internal Revenue Code shall distribute more than one capital gain distribution in any one taxable year.

The application states that distributions of principal, including any capital gains, and interest on The Mortgage-Backed Income Fund, First Monghly Paymnent Series will be made to unitholders each month. The Applicants indicate that distributions of principal constituting capital gains to unitholders may arise in the following instances: (i) an issuer might call or redeem securities held in the portfolio; (ii) securities might be liquidated in order to provide funds necessary to make redemptions; and (iii) securities might be disposed of in order to maintain the qualification of such Series as a regulated investment company under the Internal Revenue Code. The Applicants state that it is unlikely any capital gains will arise from sales upon default on payment of principal or interest on securities, institution of certain legal proceedings, default under other documents or securities, or the occurrence of other market factors that in the opinion of the Sponsors would make retention of securities in the First Series detrimental to the interests of the unitholders. Any capital gains would be distributed on the next succeeding distribution date.

In support of the requested exemption, the Applicants contend that the dangers against which Rule 19b-1 is intended to guard do not exist in the situation of the Fund since the Fund and the Sponsors have no control over events which might trigger capital gains, such as the tendering of the units for redemption, the prepayment of securities or other market or credit factors which might require sales of securities. In addition, it is alleged that the regular distribution per unit will be relatively constant within a specified range and return of capital or any capital gains distributions will be clearly distinguished from income distributions in reports by the Trustee to unitholders.

Paragraph (b) of Rule 19b-1 provides that a unit investment trust may distribute capital gains dividends received from a regulated investment company within a reasonable time after receipt. Applicants assert that the possible purpose behind such provision is to avoid forcing a unit investment trust to accumulate valid distributions received throughout the year until year-end, and that the operation of the Fund will be consistent with the apparently intended objectives of such provision.

Rule 22c-1

Rule 22c-1, adopted pursuant to Section 22(c) of the Act, provides in pertinent part, that redeemable securities of registered investment companies must be sold, redeemed, or repurchased at a price based on the current net asset value (computed on each day during which the New York Stock Exchange is open for trading not less frequently than once daily as of the time of the close of trading on such Exchange) which is next computed after receipt of a tender of such security for

redemption or of an order to purchase or sell such security.

Applicants represent that the Sponsor intends to maintain a secondary market for units at the offering side evaluation used for redemption of units. For purposes of secondary market transactions, pricing of units would be based upon evaluations made only once each week, and the basis for Sponsor's determination of its repurchase bid or offering price is the evaluation made by the Evaluator on the last business day of each week effective for all purchases and sales made by the Sponsor during the following week.

As a condition to the granting of an exemptive order by the Commission, the Applicants agree that a procedure will be instituted to ensure, without additional cost to investors, that an investor who wishes to dispose of his units will never receive less than the redemption value by selling his units to the Sponsors. The Evaluator will determine, without a formal evaluation and thus without the expense a formal evaluation would impose upon investors, if the bid side evaluation on any day during the week, which would be used for redemption purposes, has so changed that it might have become higher than, or equal to the previous Friday's offering side evaluation, which is used by the Sponsors for their bid. The Sponsors accordingly agree to obtain from the Evaluator, for each Series and on each trading day, a letter to the effect that in its independent judgment the bid side evaluation is not higher than or equal to the previous Friday's offering side evaluation, and if the Evaluator does not feel that it can give such letter the Sponsors will order a new evaluation.

Similarly, in order to minimize the risk that a purchasing investor will pay more than he would pay if daily evaluations were made, Applicants agree that the Evaluator will, without a formal evaluation, also determine if the evaluation has decreased by an amount greater than or equal to one-half point, and, if it determines that such a decrease has occurred, it will perform a new evaluation which will become the basis for the public offering price until the next succeeding evaluation.

To avoid the Sponsors' receiving more than the specified sales charge on the resale of units, the Sponsors undertake in the application not to resell any units which they repurchased at a price below the offering side evaluation.

Finally, the Applicants state that Rule 22c-1 requires that net asset value be determined as of the time of the close of trading on the New York Stock Exchange. The application notes that only rarely will securities in the various series be listed on the New York Stock Exchange and, if so listed, the principal market therefor will be over-the-counter. It is contended that the time of the close of trading on the New York Stock Exchange therefore bears little relationship to the evaluation procedures used in determining net asset value for the Fund. Since the evaluation procedure depends heavily on developments in the over-the-counter market during the day on which the evaluation is made, the Applicants state that the Evaluator has informed them that 3:30 p.m. is the most reliable time for evaluations, regardless of the time of the close of trading on the New York Stock Exchange, which may change from time to time.

Applicants therefore request that the Commission enter an order, based on the facts stated in the application, exempting the Applicants during the initial offering period for each Series from that portion of Rule 22c-1 which requires that the value of net assets be determined as of the time of the close of trading on the New York Stock Exchange and exempting them in secondary market trading from all provisions of Rule 22c-1.

Sections 11(c) and 22(d)

The Applicants state that more than 300 series of the Exchange Funds have been issued, comprising portfolios of underlying securities aggregating some $8 billion and additional series are being created and offered to the public at a rate of more than one a week. The Applicants further state that the creation and public offering of all existing series of the Exchange Funds have been undertaken with a view to full compliance with the requirements of the Act and the Securities Act of 1933 and it is anticipated that subsequent offerings of new series will comply in all respects with these Acts.

The Applicants state that although the structure of particular Exchange Funds and particular series differ in various respects depending on the nature of the underlying portfolios, the essential procedure followed in all cases is for the Sponsors to acquire a portfolio of securities, believed by them to satisfy the standards applicable to the investment objectives of the particular series, which is then deposited in trust with a corporate fiduciary in exchange for certificates representing units of undivided interest in the deposited portfolio. These units are then offered to the public at a public offering price which is based upon the offering prices of the underlying securities plus a sales charge, which is currently 3¾% of the public offering price in the case of series investing in long term debt securities and preferred stock and 3% in the case of offerings series investing in intermediate term bonds or "Ginnie Maes". The sales charge applicable to future series may be varied by the Sponsors.

The Applicants state that although the Sponsors are not legally obligated to do so, the Sponsors maintain a secondary market for units of outstanding series and continually offer to purchase these units at prices based upon the offering side evaluation of the underlying bonds, as determined by the independent evaluator. If the Sponsors discontinue maintaining a secondary market at any time, the units of the series can be liquidated by holders only by direct presentation to the trustee at redemption prices based upon the bid side evaluation of the underlying bonds.

The Applicants state that it is intended that the Exchange Option would operate as follows: The Exchange Option would be meant to operate only as to units of the various series of the Exchange Funds as to which a secondary market may from time to time be maintained. A unitholder wishing to dispose of those of his units for which a market is maintained would have the option to exchange his units into units of any other series of any Exchange Fund for which a market is also maintained. While it is not presently contemplated that unit holders would be permitted to exchange their units into units of other series which are available on original issue, the Sponsors might at some future date determine to permit such exchanges. When any unitholder notifies the Sponsors of his desire to exercise his Exchange Option the Sponsors would deliver to such unitholder a current prospectus for those series in which the unitholder has indicated an interest and which the Sponsors have available to offer to the unitholder as a result of acquisitions by them in the secondary market.

The Applicants state that the exchange transaction would operate in a manner essentially identical to any secondary transaction, except that the Sponsors seek authority to allow a reduced sales charge in a transaction pursuant to the Exchange Option. Heretofore, units of any series repurchased by the Sponsors have been resold at a public offering price based upon the offering side evaluation of the underlying securities plus a sales charge of either 3¾% or 3% depending on the nature of the portfolio making up the

particular series. The Applicants seek authority to sell units of Exchange Funds pursuant to the Exchange Option at a price equal to the offering side evaluation of the underlying securities divided by the number of units outstanding (the "Unit Offering Price"), plus a fixed charge of $15 per unit. Such $15 fixed charge can be expected to approximate about 1½% of the offering price. The Sponsors reserve the right to increase or decrease such fixed charge from time to time in the event of fluctuations in the costs of professional assistance and operational expenses in connection with these exchange transactions.

The Applicants state that an individual who has purchased units of a series with a sales charge less than the sales charge of a Series of the Fund for which such individual desires to exchange and who has held his units for a period of at least eight months would be allowed to exercise the Exchange Option at the Unit Offering Price plus a fixed sales charge of $15 per Unit. However, any such certificate-holder of a series with a lower sales charge who wisher to exchange his units for units of a Series prior to the expiration of the eight month period would only be allowed to exchange such units at the Unit Offering Price plus a sales charge based on the greater of $15 per unit or an amount which together with the initial sales charge paid in connection with the acquisition of the units being exchanged equals the sales charge of the series of the Fund for which such certificate-holder desires to exchange, determined as of the date of the exchange.

The Applicants state that a unitholder would not be permitted to make up any difference between the amount representing the units being submitted for exchange and the units being acquired. That is to say, a unitholder would be permitted to acquire pursuant to the Exchange Option whole units only and any excess amounts representing sales price of units submitted for exchange would be remitted to the unitholder.

Section 11(c) of the Act prohibits any type of offer of exchange of the securities of registered unit investment trusts for the securities of any other investment company unless the terms of the offer have been approved by the Commission or are in accordance with rules and regulations prescribed by the Commission with respect to such offers. Applicants state that none of the exemptions from the provisions of Section 11 appear to apply to the proposed Exchange Option. The Applicants state that they would therefore be unable to proceed with the Exchange Option unless the Commission grants the requested exemtpion from the provisions of the Section 11(c) of the Act.

Section 22(d) of the Act prohibits a registered investment company from selling any redeemable security issued by it except either to or through a principal underwriter for distribution other than at the current public offering price described in its prospectus. None of the applicable exemptions from the provisions of that section appear to apply to the Exchange Option. The Applicants state that they would therefore be unable to proceed with the Exchange Option unless, pursuant to Section 6(c) of the Act, the Commission exempts the Exchange Option from the provisions of Section 22(d).

The initially suggested reduced sales charge of $15 rather than the customary 3–¾% or 3% sales charge for regular primary and secondary market sales is proposed by the Sponsors as a result of certain cost savings. The Applicants believe that the proposed reduction would be beneficial to investors. Applicants submit that under the proposed Exchange Option, a person desiring to dispose of units of one series and acquire units of another series may wish to do so for a number of reasons, such as changes in his or her particular investment goals or requirements or in order to take advantage of possible tax benefits flowing from the exchange.

The application states that under the Exchange Option, the same retailer from whom the investor had purchased another investment product would likely be involved and the investment product would contain substantial similarities to the product previously sold. Applicants submit that the sales charge of $15 achieves a major goal of passing cost savings on to investors and also compensates brokers fairly for their advice, financial planning and operational expenses.

Applicants submit that requiring certificateholders of series of Exchange Funds with a lower sales charge to pay an adjusted sales charge for exchanges for units of various series of the Exchange Funds made by them under the Exchange Option during the first eight months in which they have held units of a series with a lower sales charge is appropriate since the sales charge relating to original purchases of units of such series is less than the sales charge of the series of the Exchange Fund to which they desire to convert. It could be possible under certain circumstances for a person to acquire units of series with a lower sales charge and immediately convert such units into units of a series of another Exchange Fund and pay a lower totals sales charge than a person purchasing units of such series of that Fund directly at the same time. Applicants state that under normal circumstances this situation is unlikely, since the initial sales charge on direct purchases of units of series with a lower sales charge (currently 3%) plus the conversion sales charge ($15 per unit or approximately 1–½%) usually will exceed the sales charge related to direct purchases of units of series of that Fund. However, if the price of the units of series of an Exchange Fund were to increase sharply, the $15 sales charge on exchange could represent less than the difference between the lower sales charge and the higher sales charge, in which case the exchanging certificateholder could obtain an unfair price advantage when compared to investors making direct purchases of units of a series of that Fund. Applicants submit that after a certificateholder of a series with a lower sales charge has held his units for an adequate period of time (here proposed to be eight months), the discriminatory nature of his effecting an exchange transaction is not as compelling, and thus the possible abuses outlined above are not material.

Section 6(c) of the Act provides, in part, that the Commission, by order upon application, may conditionally or unconditionally exempt any person, security or transaction from any provision of the Act or of any rule or regulation thereunder, if and to the extent that such exemption is necessary or appropriate in the public interest and consistent with the protection of investors and the purposes fairly intended by the policy and provisions of the Act.

Notice is further given that any interested person may, not later than July 23, 1979, at 5:30 p.m., submit to the Commission in writing a request for a hearing on the matter accompanied by a statement as to the nature of his interest, the reason for such request, and the issues, if any, of fact or law proposed to be controverted, or he may request that he be notified if the Commission shall order a hearing thereon. Any such communication should be addressed: Secretary, Securities and Exchange Commission, Washington, D.C. 20549. A copy of such request shall be served personally or by mail upon Applicant(s) at the address(es) stated above. Proof of such service (by affidavit, or in case of an attorney-at-law, by certificate) shall be filed contemporaneously with the

request. As provided by Rule 0-5 of the Rules and Regulations promulgated under the Act, an order disposing of the application will be issued as of course following said date unless the Commission thereafter orders a hearing upon request or upon the Commission's own motion. Persons who request a hearing, or advice as to whether a hearing is ordered, will receive any notices and orders issued in this matter, including the date of the hearing (if ordered) and any postponements thereof.

For the Commission, by the Division of Investment Management, pursuant to delegated authority.

George A. Fitzsimmons,

Secretary.

[FR Doc. 79-20887 Filed 7-5-79; 8:45 am]

BILLING CODE 8010-01-M

[File No. 81-434; Administrative Proceeding File No. 3-5683]

Portland Transit Co.; Application and Opportunity for Hearing

June 28, 1979.

Notice is hereby given that Portland Transit Company ("Applicant") has filed an application pursuant to Section 12(h) of the Securities Exchange Act of 1934, as amended (the "1934 Act") for an order exempting it from the reporting requirements under Sections 13 and 15(d) of the 1934 Act.

Applicant's application discloses in part:

1. In July 1976, Applicant adopted a Plan of Liquidation.
2. As of December 31, 1977, Applicant had distributed to its shareholders approximately 93% of its assets, leaving just a small remainder for the settlement of liabilities.
3. As far as can be ascertained and in light of the steps taken in dissolution, all trading in Applicant's stock has ceased.
4. Applicant believes that further reports under the 1934 Act would involve a substantial burden, and would not serve any real purpose in the public interest or for the protection of shareholders.

For a more detailed statement of the information presented, all persons are referred to said application which is on file in the offices of the Commission at 1100 L Street, N.W., Washington, D.C. 20549.

Notice is further given that any interested person no later than July 23, 1979 may submit to the Commission in writing his views or any substantial facts bearing on this application or the desirability of a hearing thereon. Any such communications or request should be addressed: Secretary, Securities and Exchange Commission, 500 North Capitol Street, N.W., Washington, D.C. 20549, and should state briefly the nature of the interest of the person submitting such information or requesting the hearing, the reason for such request, and the issues of fact and law raised by the application which he desires to controvert. At any time after said date, an order granting the application may be issued upon request or upon the Commission's own motion.

For the Commission, by the Division of Corporation Finance, pursuant to delegated authority.

George A. Fitzsimmons,

Secretary.

[FR Doc. 79-20376 Filed 7-5-79; 8:45 am]

BILLING CODE 8010-01-M

[File No. 81-530; Administrative Proceeding File No. 3-5754]

Resource Management Corp.; Application and Opportunity for Hearing

June 28, 1979.

Notice is hereby given that Resource Management Corporation ("Applicant") had filed an application pursuant to Section 12(h) of the Securities Exchange Act of 1934, as amended (the "1934 Act"), seeking an exemption from the requirement to file reports pursuant to Sections 13 and 15(d) of the 1934 Act.

The Applicant states in part:

1. The Applicant is a publicly-held company with a class of securities registered pursuant to Section 12(g) of the 1934 Act, and is thus subject to the reporting provisions of Section 13 of the 1934 Act.
2. On March 28, 1979, the Applicant consummated a merger into a wholly owned subsidiary of Kappa Systems, Inc. ("Kappa") pursuant to a Plan and Agreement of Merger dated June 23, 1978.
3. As a result of the sale, all the issued and outstanding shares of common stock of the Applicant are now held solely by Kappa.

In the absence of an exemption, Applicant will be required to file certain periodic reports with the Commission, including an annual report on form 10-K for the fiscal year ended June 30, 1979, pursuant to Sections 13 and 15(d) of the 1934 Act.

The Applicant contends that no useful purpose would be served in filing the periodic reports because all of its common stock is now held solely by Kappa, there is no trading market for Applicant's common stock, Applicant has no publicly held securities, Applicant's security holders were advised of current financial information in the proxy dated March 6, 1979, and they have no further interest or investment in Applicant as an independent entity.

For a more detailed statement of the information presented, all persons are referred to said application which is on file in the Office of the Commission at 1100 L Street, NW., Washington, D.C. 20549.

Notice is further given that any interested person not later than July 23, 1979 may submit to the Commission in writing his views or any substantial facts bearing on the application or the desirability of a hearing thereon. Any such communication or request should be addressed: Secretary, Securities and Exchange Commission, 500 North Capitol Street, NW., Washington, D.C. 20549, and should state briefly the nature of the person submitting such information or requesting the hearing, the reason for such request, and the issues of fact and law raised by the application which he desires to controvert.

Persons who request a hearing or advice as to whether a hearing is ordered will receive any notices or orders issued in this matter, including the date of the hearing (if ordered) and any postponements thereof. At any time after said date, an order granting the application may be issued upon request or upon the Commission's own motion.

For the Commission, by the Division of Corporation Finance, pursuant to delegated authority.

George A. Fitzsimmons,

Secretary.

[FR Doc. 79-20872 Filed 7-5-79; 8:45 am]

BILLING CODE 8010-01-M

[Securities Act of 1933; Release No. 6087, (18-47)]

Retirement Savings Plan of Whitman & Ransom; Filing of Amended Application

June 27, 1979.

In the Matter of Retirement Savings Plan of Whitman & Ransom, 522 Fifth Avenue, New York, N.Y. 10036.

Notice is hereby given that the law firm of Whitman & Ransom ("Applicant" or "Firm") filed an application on June 21, 1979 for an amended order pursuant to Section 3(a)(2) of the Securities Act of 1933 ("Act") exempting from the registration requirements of the Act interests or participations issued in connection with the Retirement Savings Plan of Whitman & Ransom ("Plan").

Applicant states that the Plan is of the type commonly referred to as a "Keogh" plan, which covers employees (in this case, Applicant's partners) who are

employees within the meaning of Section 401(c)(1) of the Internal Revenue Code of 1954, as amended ("Code"), and therefore is excepted from the exemption provided by Section 3(a)(2) of the Act for interests or participations in employee benefit plans of certain employers. Section 3(a)(2) of the Act provides, however, that the Commission may exempt from the provisions of Section 5 of the Act any interest or participation issued in connection with a pension or profit-sharing plan which covers employees some or all of whom are employees within the meaning of Section 401(c)(1) of the Code, if and to the extent that the Commission determines this to be necessary or appropriate in the public interest and consistent with the protection of investors and the purposes fairly intended by the policy and provisions of the Act.

On March 27, 1975 Applicant adopted the Plan and on August 4, 1978 the Commission issued an Order (Securities Act Release No. 5955) (the "1978 Order") exempting the Plan from Section 5 of the Act. The 1978 Order was based on the Firm's application dated December 19, 1977 (the "Prior Application").

The Prior Application sets forth in detail the operative provisions of the Plan and indicates that the Plan is qualified under Section 401(a) of the Code and is subject to the fiduciary standards and the reporting and disclosure requirements imposed by the Employee Retirement Income Security Act of 1974 ("ERISA").

The Plan as structured at the time of the 1978 Order offered participants a choice of two funding media: Trust A is invested by the Trustees (partners of the Firm) in separate deposit accounts in either savings banks or savings and loan associations at such available maturity and interest rates as the participants may select; and Trust B consists of investments made in its discretion by the U.S. Trust Company of New York, as trustee.

Applicant wishes to amend its prior Order to add a New Trust C as a funding medium. Participants will be permitted to divide contributions among all three funding media. The purpose of Trust C is to enable participants to direct their own investments made for their individual accounts which will be maintained by one or more brokers. Applicant states that all expenses and transaction charges incurred with respect to an individual account in Trust C will be charged only to such account.

Applicant states that the new option provided by Trust C offers Plan participants a meaningful alternative to the interest investment fund provided by Trust A and the Trust B securities fund managed by a corporate trustee and that therefore granting the requested exemption would be appropriate in the public interest, and consistent with the protection of investors and the purposes fairly intended by the policy and provisions of the Act.

Notice is further given that any interested person may, not later than July 23, 1979, at 5:30 p.m. submit to the Commission in writing a request for a hearing on the matter accompanied by a statement as to the nature of his interest, the reason for such request, and the issues, if any, of fact or law proposed to be controverted, or he may request that he be notified if the Commission should order a hearing thereon. Any such communication should be addressed: Secretary, Securities and Exchange Commission, Washington, D.C. 20549. A copy of such request shall be served personally or by mail upon Applicants at the address stated above. Proof of such service (by affidavit, or in the case of an attorney at law, by certificate) shall be filed contemporaneously with the request. An order disposing of the application will be issued as of course following July 23, 1979, unless the Commission thereafter orders a hearing upon request or upon the Commission's own motion. Persons who request a hearing, or advice as to whether a hearing is ordered, will receive any notices and orders issued in this matter, including the date of the hearing (if ordered) and any postponements thereof.

For the Commission, by the Division of Investment Management, pursuant to delegated authority.

George A. Fitzsimmons,

Secretary.

[FR Doc. 79-20886 Filed 7-5-79; 8:45 am]

BILLING CODE 8010-01-M

[File No. 81-506; Administrative Proceeding File No. 3-5738]

Ross Aviation, Inc.; Application and Opportunity for Hearing

Notice is hereby given that Ross Aviation, Inc. ("Applicant") has filed an application pursuant to Section 12(h) of the Securities Exchange Act of 1934, as amended (the "1934 Act"), seeking an exemption from the reporting provisions of Sections 13 and 15(d) of that Act.

The Applicant states in part:

1. Prior to March 1, 1978, the common stock of Ross Aviation, Incorporated was subject to the provisions of Sections 15(d) and 12(g) of the 1934 Act.

2. As a result of a tender offer made by Sterling Oil of Oklahoma, Inc. ("Sterling"), over 92% of the common stock was owned by Sterling.

3. On March 1, 1979, Ross Aviation, Incorporated was merged into Applicant, a wholly owned subsidiary of Sterling, and all of the outstanding shares of Ross Aviation, Incorporated not then owned by Applicant were canceled.

4. As a result of the tender offer and merger, Applicant owns all the issued shares of Ross Aviation, Incorporated and the Applicant has only one shareholder, Sterling.

5. Since March 1, 1978 there have been no transactions in the Applicant's common stock and none will occur.

6. After termination of the Section 12(g) registration of Ross Aviation, Incorporated, on March 23, 1979, Applicant is subject to the reporting provisions of Section 15(d) of the 1934 Act.

In the absence of an exemption, Applicant will be required to file certain periodic reports with the Commission for periods ending in 1979.

The Applicant contends that no useful purpose would be served in filing the periodic reports because none of its securities is publicly held, and its common stock is no longer publicly traded.

For a more detailed statement of the information presented, all persons are referred to said application which is on file in the Office of the Commission at 1100 L Street, N.W., Washington, D.C. 20549.

Notice is further given that any interested person not later than July 23, 1979 may submit to the Commission in writing his views or any substantial facts bearing on the application or the desirability of a hearing thereon. Any such communication or request should be addressed: Secretary, Securities and Exchange Commission, 500 North Capitol Street, N.W., Washington, D.C. 20549, and should state briefly the nature of the person submitting such information or requesting the hearing, the reason for such request, and the issues of fact and law raised by the application which he desires to controvert.

Persons who request a hearing or advice as to whether a hearing is ordered will receive any notices and orders issued in the matter, including the date of the hearing (if ordered) and any postponements thereof. At any time after said date, an order granting the application may be issued upon request or upon the Commission's own motion.

For the Commission, by the Division of Corporation Finance pursuant to delegated authority.

George A. Fitzsimmons,

Secretary.

[FR Doc. 79-20674 Filed 7-5-79; 8:45 am]

BILLING CODE 8010-01-M

[Release No. 34-15938; File No. SR-MSRB-79-6]

Self-Regulatory Organizations; Proposed Rule Changes by Municipal Securities Rulemaking Board

Pursuant to Section 19(b)(1) of the Securities Exchange Act of 1934, 15 U.S.C. 78s(b)(1), notice is hereby given that on June 6, 1979, the above-mentioned self-regulatory organization filed with the Securities and Exchange Commission the proposed rule changes as follow:

Statement of the Terms of Substance of the Proposed Rule Changes

The Municipal Securities Rulemaking Board (the "Board") is filing herewith proposed amendments to rule G-15 on customer confirmations (hereafter sometimes referred to as the "proposed rule changes"). The proposed rule changes would modify the requirements of rule G-15 with respect to the information to be provided to customers on confirmations of transactions involving callable securities. The text of the proposed rule changes is set forth below.

Statement of Basis and Purpose

The basis and purpose of the foregoing proposed rule changes is as follows:

Purpose of Proposed Rule Changes

Rule G-15 requires brokers, dealers and municipal securities dealers ("municipal securities dealers" or "municipal securities professionals") to send written confirmations of municipal securities transactions to customers and prescribes the information to be set forth on the confirmations. In the case of callable securities, rule G-15 currently requires a customer confirmation to indicate:

(1) That the securities are callable;

(2) The yield at which transaction was effected and resulting dollar price, except in the case of securities traded on the basis of dollar price or sold at par, in which event only dollar price is required; and

(3) Whether the securities are priced to premium call or to par option.

Further, rule G-15 requires that if a transaction is effected on a yield basis, the price must be calculated to the lowest of price to premium call, price to par option or price to maturity.

The proposed rule changes would modify the provisions of rule G-15 relating to callable securities in two respects. These changes are discussed below.

Trades Made on the Basis of Dollar Price

As noted above, rule G-15 currently provides an exception for transactions "effected on the basis of dollar price" from the requirement that the yield at which a transaction is effected be shown on confirmations. The proposed rule change would eliminate this exception, so that the yield information requirement would apply to all customer transactions, whether effected on the basis of yield or dollar price.

The Board has adopted the proposed rule changes because it believes that yield information should be furnished on all confirmations since such information is of critical importance to investors in municipal securities. Investors are primarily concerned in municipal securities transactions with the yield which they will realize on their investments, and it is this yield that they use as a basis for comparing investments in municipal securities. The Board notes in this regard that yield information is often provided to a customer at the time of trade, even if the transaction is executed on a dollar basis.

The proposed rule changes would apply also to transactions involving "dollar" bonds, *i.e.*, municipal securities which are normally traded on the basis of dollar price. Some municipal securities are sold as term issues with a single coupon rate and maturity date. Because of the large size of certain of these issues of identical securities, they can be traded on dollar prices rather than on yields. Yield information is still important to customers in such transactions for the reasons noted above, including the fact that it facilitates the comparison of investment alternatives. In the case of other types of "dollar" bonds, yield information may be important to customers, although perhaps less so than in other transactions. For example, investors purchase certain types of "dollar" bonds primarily in anticipation of being able to tender them successfully to a sinking fund at an appreciated price. Yield information in such situations may nevertheless be relevant to a customer's investment decision since it provides the customer with information concerning the return on his or her investment should the customer be unable to tender the securities successfully to the sinking fund.

Information Relating to Call Features

As noted above, rule G-15 requires that if a transaction is effected on a yield basis, the price must be calculated to the lowest of price to premium call, price to par option, or price to maturity. Under this provision, dollar price must be calculated in such transactions to a date at which an issuer may exercise an option to call the whole of a particular issue or, in the case of serial bonds, a particular maturity, and not to the date of a call in part.

The Board is concerned that customers may be misled unless they are apprised of the possibility of receiving a yield substantially less than anticipated on their investment as a result of the exercise of an "in part" call. The Board recognizes, however, that it would not be practical to provide complete information on customer confirmations regarding all call features or to price securities on the basis of the possibility that an "in part" call will be exercised with respect to the securities. The Board nevertheless is of the view that customers should be made aware of the possibility of the exercise of such a call feature. The Board therefore proposes to modify rule G-15 to require that a statement be included on each confirmation, when appropriate, indicating that if the securities are called, the yield realized by the customer may differ from the yield indicated on the confirmation, and further, that information concerning the call provisions of such securities will be provided upon request. This requirement could be satisfied by a statement to the following effect:

Call features may exist which could affect yield; complete information will be provided upon request.

Delayed Effective Date

If the Commission determines to approve the proposed rule changes, the Board hereby respectfully requests that the Commission make the proposed rule changes effective as of the date six months following the date of approval. The Board requests such a delay in order to provide municipal securities dealers sufficient time to re-program their data processing systems and to prepare and order new confirmation forms, if necessary.

Basis Under the Act for Proposed Rule Changes

The Board has adopted the proposed rule changes pursuant to section

15B(b)(2)(C) of the Securities Exchange Act of 1934, as amended (the "Act"), which directs the Board to propose and adopt rules:

> * * * designed to prevent fraudulent and manipulative acts and practices, to promote just and equitable principles of trade, to foster cooperation and coordination with persons engaged in regulating, clearing, settling, processing information with respect to, and facilitating transactions in municipal securities, to remove impediments to and perfect the mechanism of a free and open market in municipal securities, and, in general, to protect investors and the public interest * * *

Comments Received From Members, Participants or Others on Proposed Rule Changes

On February 5, 1979, the Board released a notice soliciting comments on the proposed rule changes, as well as certain other proposed changes to rule G-15 which have not been adopted by the Board. A total of twelve letters of comment were received in response to the notice. The letters of comment were from the following persons:

Bankers Trust Company ("Bankers Trust").
The Cashiers' Association of Wall Street, Inc. ("Cashiers' Association").
Dealer Bank Association (the "DBA").
A. G. Edwards and Sons, Inc. ("A. G. Edwards").
Lebenthal and Co., Inc. ("Lebenthal").
Hugo Marx & Co.
National Association of Securities Dealers, Inc. (the "NASD").
Public Securities Association (the "PSA").
Seattle-Northwest Securities Corporation.
Securities Industry Association—Data Management Division (the "SIA").
Union Bank.
Wauterlek & Brown, Inc. ("Wauterlek & Brown").

Copies of the comment letters, as well as the February 5, 1979 notice, are on file at the offices of the Board.

Trades Made on the Basis of Dollar Price

The DBA and the NASD expressed general support for all of the proposed changes, including the proposal to eliminate the exception for transactions "effected on the basis of dollar price" from the requirement to show yield on confirmations.

Several commentators expressed opposition to this proposal. A. G. Edwards and Bankers Trust objected to the application of the proposed requirement to "dollar" bond transactions, claiming that it would not provide meaningful information to customers. A. G. Edwards also asserted that it would have difficulty generating the required yield information for transactions effected on a dollar basis, given the limitations of the firm's current data processing system. Lebenthal expressed a similar concern.

As indicated above, the Board is of the view that yield information may be important to customers even in "dollar" bond transactions. In such transactions as well as in other municipal securities transactions, yield information provides a means for a customer to evaluate the merits of investing in a particular security and a basis for comparing investment alternatives. In the case of certain dollar bond transactions where the yield to maturity or yield to call is not the primary motivating factor, yield information may nevertheless be important to customers for the reasons discussed and because it highlights for customers the importance of the other factors and their anticipated value.

The Board is also of the view that the benefit to customers of providing yield information outweighs any possible burden on municipal securities dealers in providing such information. However, in recognition of the fact that the proposed rule changes may require certain municipal securities dealers to revise their data processing systems or to make other modifications in this area, the Board has requested the Commission in this filing, if it determines to approve the proposed rule changes, to delay their effective date for six months from the date of Commission approval.

In oral comments, several industry members have inquired regarding the degree of refinement that would be required in calculating yields on "dollar" bonds. The Board is of the view that, in recognition of the mathematical complexity of deriving a precise yield figure from a dollar price, calculation of the approximate yield to the nearest five hundredths of a percentage point would be sufficient.

The PSA and Wauterlek & Brown expressed opposition to application of the proposal to transactions involving purchases of municipal securities from customers. According to Wauterlek & Brown, in the case of dollar bonds, "the dollars [the customers] will receive are what is important, not the yield they would continue to get if they were not selling."

The proposed rule changes would apply both to purchases from, and sales to, customers of municipal securities traded on the bases of dollar price, including "dollar" bonds. The Board believes that the yield information requirement should apply in both situations since such information may have relevance to a customer who is selling, as well as purchasing municipal securities. For example, in "swapping" securities for tax purposes, a customer is interested in the yield of the securities being sold, particularly in respect of how such yield compares with the yield of the securities being purchased. Such information is also useful to customers in comparing the merits of securities which the customer is considering purchasing, with those which are being sold.

Information Relating to Call Features

The DBA, the NASD, the PSA, and Wauterlek & Brown expressed support for the proposal to require that customer confirmations indicate that call features exist which could effect realization of the yields shown, and that additional information relating to such call features will be furnished upon request.

A. G. Edwards expressed opposition to the proposal, suggesting that a statement to such effect on confirmations would only confuse customers. Union Bank suggested that there are several problems with the proposal. According to Union Bank, there may be circumstances when it will not be clear whether the statement as to yield should be used. Union Bank suggested therefore that a legend be permitted to be placed on every confirmation and not only on confirmations for securities subject to "normal" calls. The proposed amendments would permit the use of a legend in this manner, although a legend would have to be used only when, in fact, call features exist which may affect yield.

Union Bank also suggested that this provision may be difficult to comply with since information as to call features is not always easily obtainable. The Board believes that in view of the potential importance of such information, municipal securities professionals should have the responsibility for providing the information to customers, if requested.

The Board does not believe that this will impose an undue burden on municipal securities professionals. In many cases, a municipal securities professional will be familiar with the existence and operation of call features for particular securities. Further, a municipal securities professional is generally in a better position than a customer to obtain information regarding call features, since the municipal securities professional may subscribe to publications containing such information or otherwise be aware of where such information may be obtained.

In this regard, the Board notes that information as to call feaures is usually

contained in the legal opinion accompanying municipal securities. The proposed requirement to provide information regarding call features could be satisfied by referring a customer to the legal opinion, if the customer has possession of the securities.

Other Comments on Exposure Draft

One of the proposed changes to rule G–15 set forth in the February 5 notice would have required that yield to maturity, as well as yield to premium call or par option, be shown on customer confirmations if transactions are effected on the basis of yield to premium call or par option. Substantial comment was received on this proposal. Since the Board has decided not to modify rule G–15 to require that both yields be shown, there is no need to discuss the comments in detail.

The Board continues to be concerned that in certain circumstances information as to yield to maturity may be important to customers, even when securities are priced to premium call or par option. For example, in certain instances the concomitant yield to maturity may be significantly lower than the yield on comparable non-callable securities of similiar maturity, even though the yield to call at which the transaction is effected may provide a fair and reasonable return if the call is exercised. Information on the yield to maturity in such cases may be particularly important to customers in making investment decisions. The Board is currently considering ways, other than modifying rule G–15, to address its concern in this area.

Burden on Competition

The Board believes that the proposed rule changes will not impose any burden on competition.

On or before August 10, 1979, or within such longer period (i) as the Commission may designate up to 90 days of such date if it finds such longer period to be appropriate and publishes its reasons for so finding or (ii) as to which the above-mentioned self-regulatory organization consents, the Commission will:

(A) by order approve such proposed rule changes, or

(B) institute proceedings to determine whether the proposed rule changes should be disapproved.

Interested persons are invited to submit written data, views and arguments concerning the foregoing. Persons desiring to make written submissions should file 6 copies thereof with the Secretary of the Commission, Securities and Exchange Commission, Washington, D.C. 20549. Copies of the filing with respect to the foregoing and of all written submissions will be available for inspection and copying in the Public Reference Room, 1100 L Street, NW., Washington, D.C. Copies of such filing will also be available for inspection and copying at the principal office of the above-mentioned self-regulatory organization. All submissions should refer to the file number referenced in the caption above and should be submitted within 21 days of the date of this publication.

For the Commission by the Division of Market Regulation, pursuant to delegated authority.

George A. Fitzsimmons,

Secretary.

June 19, 1979.

Text of Proposed Rules Changes [1]

Rule G–15. Customer Confirmations

(a) (i) through (vii) No change.

(viii) [yield at which transaction was effected and resulting dollar price, except in the case of securities which are traded on the basis of dollar price or securities sold at par, in which event only dollar price need be shown (in cases in which securities are priced to premium call or to par option, this must be stated, and where a transaction is effected on a yield basis, the dollar price shall be calculated to the lowest of price to premium call, price to par option, or price to maturity);] *yield and dollar price, as follows:*

(A) for transactions effected on a yield basis, the yield at which transaction was effected and the resulting dollar price shall be shown. Such dollar price shall be calculated to the lowest of price to premium call, price to par option, or price to maturity. In cases in which the dollar price is calculated to premium call or par option, this must be stated.

(B) for transactions effected on the basis of dollar price, the dollar price at which transaction was effected, and the lowest of the resulting yield to premium call, yield to par option, or yield to maturity shall be shown.

(C) for transactions at par, the dollar price shall be shown;

(ix) through (xiii) No change.

(b) No change.

(c) In addition to the information required by paragraphs (a) and (b) above, each confirmation to a customer shall contain the following information, if applicable:

(i) through (iii) No change.

(iv) if the securities are callable, a statement that the yield set forth pursuant to subparagraph (viii) of paragraph (a) may be affected by the exercise of a call provision, and that information relating to call provisions is available upon request. A statement to the following effect will be deemed to satisfy this requirement:

"Call features may exist which could affect yield; complete information will be provided upon request";

(*v*) [(iv)] denominations of notes and, if other than the following, denominations of bonds:

(A) for bearer bonds, denominations of $1,000 or $5,000 par value, and

(B) for registered bonds, denominations which are multiples of $1,000 par value, up to $100,000 par value;

(*vi*) [(v)] any special instructions or qualifications, or factors affecting payment of principal or interest, such as (A) "ex legal," or (B), if the securities are traded without interest, "flat," or (C) if the securities are in default as to the payment of interest or principal, "in default," and

(*vii*) [(vi)] such other information as may be necessary to ensure that the parties agree to the details of the transaction.

(d) through (h) No change.

[FR Doc. 79-20034 Filed 7-5-79; 8:45 am]

BILLING CODE 8010-01-M

[1] *Italic* indicates new language; [brackets] indicate deletions.

[Release No. 34-15937; Filed No. SR-MSRB-79-7.]

Self-Regulatory Organizations; Proposed Rule Change by Municipal Securities Rulemaking Board

Pursuant to Section 19(b)(1) of the Securities Exchange Act of 1934, 15 U.S.C. 78s(b)(1), notice is hereby given that on June 6, 1979 the above-mentioned self-regulatory organization filed with the Securities and Exchange Commission the proposed rule changes as follows:

Statement of the Terms of Substance of the Proposed Rule Changes

The Municipal Securities Rulemaking Board (the "Board") is filing herewith proposed amendments to Board rule G–3 (hereafter sometimes referred to as the "proposed rule changes") which, among other matters, prescribes qualification requirements for municipal securities dealers. The proposed rule changes would modify rule G–3 as follows:

1. Section (e) of rule G–3 would be modified to clarify the relationship between the requirement for a municipal securities representative to take and pass the Municipal Securities Representative Qualification

Examination and the requirement for new persons entering the industry as representatives to serve a 90-day apprenticeship; and

2. Section (h) of the rule G-3 would be modified to limit the period of apprenticeship, for purposes of the Board's rules, to maximum of 180 days. The text of the proposed rule changes is set forth below.

Statement of Basis and Purpose

The basis and purpose of the foregoing proposed rule changes is as follows:

Under rule G-2, a municipal securities representative may not effect any transaction in municipal securities unless qualified. Rule G-3(e) provides that a municipal securities representative must take and pass the Municipal Securities Representative Qualification Examiniation (the "Examiniation") prior to being qualified in that capacity. Rule G-3(h) requires a person new to the industry to serve an apprenticeship period of "at least 90 days," commencing from the date he or she becomes associated with a municipal securities broker or municipal securities dealer. During this period, such a person may not effect transactions "with any member of the public," or be compensated for any transactions in municipal securities. Individuals subject to the limitations of rule G-3(h) are permitted to transact business with persons other than members of the public if their compensation is not based upon transactions in municipal securities effected by them. Thus, salaried personnel of a securities firm or bank dealer may effect transactions with other municipal securities professionals during the 90 day period.

Proposed Amendment to Rule G-3(e)

The Board is concerned that there is an apparent inconsistency in rule G-3 between the provisions requiring persons to pass the Examination before they may effect transactions in municipal securities and the provision permitting persons to engage in certain limited activities during the 90 day apprenticeship period. In adopting rule G-3, the Board intended these provisions to establish separate and independent requirements for persons seeking to become qualified as municipal securities professionals; for example, a person new to the industry does not have to pass the Examination in order to engage in the limited activities of an apprentice representative. Further, a person subject to the apprenticeship requirement may take the Examination at any time during the apprenticeship period, as well as after the end of it. The proposed amendment to rule G-3(e) is intended to clarify this relationship between the examination and the apprenticeship requirements of the rule.

Proposed Amendment to Rule G-3(h)

As noted above, rule G-3(h) currently restricts the activities in which a person new to the industry may engage *"for a period of at least 90 days"* following the commencement of such person's association with a securities firm or bank dealer. During this period, such persons may effect transactions only with other municipal securities professionals. The Board is concerned that the "at least 90 days" provision might be construed to permit an individual to continue in apprenticeship status for an undue period of time, without taking and passing the Examination. For example, a person could theoretically continue to function indefinitely as a "trader" without passing the Examination by claiming apprenticeship status, since traders do not transact business with the public. This would be inconsistent with the Board's purpose in establishing an apprenticeship requirement. The Board therefore proposes to modify rule G-3(h) to provide that a person may not continue as an apprentice, for purposes of the Board's rules, beyond 180 days following the commencement of his or her employment. This would mean that a person newly entering the industry would have to pass the representative or principal examination before the expiration of 180 days or cease to perform any of the functions of a municipal securities professional. A person subject to the apprenticeship requirement would have to act in such capacity for a minimum of 90 days, even if the person passes the required examinations before the end of the 90 day period. The Board believes that 180 days is a reasonable time limit since it will permit persons who fail the representative or principal examination to take them up to three times.

Basis Under the Act for Proposed Rule Changes

The Board has adopted the proposed rule changes pursuant to the provisions of Section 15B(b)(2)(A) of the Securities Exchange Act of 1934, as amended (the "Act") which directs the Board to propose and adopt rules which provide that no municipal securities broker or municipal securities deal shall effect any transaction in, or induce or attempt to induce the purchase or sale of, any municipal security unless * * * such municipal securities broker or municipal securities dealer and every natural person associated with such municipal securities broker or municipal securities dealer meets such standards of training, experience, competence, and such other qualifications as the Board finds necessary or appropriate in the public interest or for the protection of investors.

Comments Received From Members, Participants or Others on Proposed Rule Changes

The Board neither solicited nor received comments on the proposed rule changes. The Board and its staff, however, have recently received several inquiries concerning the points addressed by the proposed rule changes.

Burden on Competition

The Board believes that the proposed rule changes will not impose any burden on competition.

On or before August 10, 1979, or within such longer period (i) as the Commission may designate up to 90 days of such date if it finds such longer period to be appropriate and publishes its reasons for so finding or (ii) as to which the above-mentioned self-regulatory organization consents, the Commission will:

(A) by order approve such proposed rule changes, or

(B) institute proceedings to determine whether the proposed rule changes should be disapproved.

Interested persons are invited to submit written data, views and arguments concerning the foregoing. Persons desiring to make written submissions should file 6 copies thereof with the Secretary of the Commission, Securities and Exchange Commission, Washington, D.C. 20549. Copies of the filing with respect to the foregoing and of all written submissions will be available for inspection and copying in the Public Reference Room, 1100 L Street, N.W., Washington, D.C. Copies of such filing will also be available for inspection and copying at the principal office of the above-mentioned self-regulatory organization. All submissions should refer to the file number referenced in the caption above and should be submitted within 21 days of the date of this publication.

For the Commission by the Division of Market Regulation, pursuant to delegated authority.

George A. Fitzsimmons,

Secretary.

June 19, 1979.

Text of Proposed Rule Change *

Rule G-3. Classification of Principals and Representatives; Numerical Requirements; Testing

(a) through (d) No change.

(e) (i) through (iii) No change.

(iv) *A person subject to the requirements of section (h) of this rule shall not have to comply with the requirements of paragraph (e)(i) prior to the expiration of 180 days following the date such person becomes associated with a municipal securities broker or municipal securities dealer. Any person whose compliance with the requirements of section (h) is waived pursuant to the provisions of such section shall take and pass the Municipal Securities Representative Qualification Examination prior to being qualified as a municipal securities representative unless exempt therefrom pursuant to the provisions of subparagraph (e)(ii)(E) of this rule or the requirements of paragraph (e)(i) are waived pursuant to paragraph (e)(v) of this rule.*

(v)[iv] The requirements of paragraph (e)(i) shall not apply to any person who is qualified as a municipal securities principal or a general securities principal who becomes a municipal securities representative, provided that such person shall take and pass the Municipal Securities Representative Qualification Examination within 90 days after becoming a municipal securities representative, or qualify as a general securities representative with a registered securities association within 90 days after becoming a municipal securities representative.

(vi)[v] The requirements of paragraph (e)(i) may be waived by a registered securities association with respect to a person associated with a member of such association, by the Commission with respect to a person associated with any other municipal securities broker or municipal securities dealer (other than a bank dealer), or by the appropriate regulatory agency with respect to a person associated with a bank dealer, in extraordinary cases in which such person demonstrates extensive experience in a field closely related to the business of such municipal securities broker or municipal securities dealer in municipal securities.

(vii)[vi] The requirements of paragraph (e)(i) shall become effective on May 1, 1979 (six months following the date of the first administration of the Municipal Securities Representative Qualification Examination).

(f) through (g) No change.

(h) Employment. Notwithstanding any other provision of this rule, a person who first becomes associated with a municipal securities broker or municipal securities dealer in a representative capacity (whether as a general securities representative or a municipal securities representative) or in a principal capacity without previously having qualified as a general securities representative or municipal securities representative shall not transact business with any member of the public with respect to, or be compensated for any transactions in, municipal securities for a period of at least 90 days following the commencement of such person's association with such municipal securities broker or municipal securities dealer, regardless of such person's having qualified as a municipal securities principal or municipal securities representative during such period; provided, however, that *no person subject to the requirements of this section shall continue to perform any of the functions of a municipal securities representative or municipal securities principal after 180 days following the commencement of such person's association with such municipal securities broker or municipal securities dealer, unless such person qualifies as a municipal securities representative or municipal securities principal pursuant to paragraphs (e)(i) or (c)(i), respectively.* The requirements of this section (h) may be waived by a registered securities association with respect to a person associated with a member of such association, by the Commission with respect to a person associated with any other municipal securities broker or municipal securities dealer (other than a bank dealer), or by the appropriate regulatory agency with respect to a person associated with a bank dealer, in extraordinary cases in which such person demonstrates extensive experience in a field closely related to the business of such municipal securities broker or municipal securities dealer in municipal securities.

[FR Doc. 79-20685 Filed 7-5-79; 8:45 am]

BILLING CODE 8010-01-M

* *Italics* indicate additions; [brackets] indicate deletions.

[File No. 81-510; Administrative Proceeding File No. 3-5766]

Zemarc, Ltd.; Application and Opportunity for Hearing

June 28, 1979.

Notice is hereby given that Zemarc, Ltd. ("Applicant") has filed an application, pursuant to Section 12(h) of the Securities Exchange Act of 1934, as amended (the "1934 Act"), that Applicant be granted an exemption from the reporting provisions of Sections 13 and 15(d) of that Act.

The applicant states, in part:

1. Applicant was incorporated under the laws of the state of Pennsylvania; and

2. Pursuant to a Plan of Complete Liquidation and Distribution adopted by shareholders on December 16, 1976, the Company was formally dissolved on February 2, 1979.

In the absence of an exemption, Applicant is required to file reports pursuant to Sections 13 and 15(d) of the 1934 Act. Applicant believes that its request for an order exempting it from the provisions of Sections 13 and 15(d) of the 1934 Act is appropriate in view of the fact that on April 10, 1979 a final liquidating disbursement of all remaining assets was made to the Applicant's shareholders. Applicant believes that the time, effort and expense involved in preparation of additional periodic reports would be disproportionate to any benefit of the public.

For a more detailed statement of the information presented, all persons are referred to said application which is on file in the offices of the Commission at 500 North Capitol Street, N.W., Washington, D.C. 20549.

Notice is further given that any interested person not later than July 23, 1979 may submit to the Commission in writing his views or any substantial facts bearing on this application or the desirability of a hearing thereon. Any such communication or request should be addressed: Secretary, Securities and Exchange Commission, 500 North Capitol Street, Washington, D.C. 20549, and should state briefly the nature of the interest of the person submitting such information or requesting the hearing, the reason for such request, and the issues of fact and law raised by the application which he desires to controvert. At any time after said date, an order granting the application may be issued upon request or upon the Commission's own motion.

For the Commission, by the Division of Corporation Finance, pursuant to delegated authority.

George A. Fitzsimmons,

Secretary.

[FR Doc. 79-20873 Filed 7-5-79; 8:45 am]

BILLING CODE 8010-01-M

RAILROAD RETIREMENT BOARD

Actuarial Advisory Committee With Respect to the Railroad Retirement Accounts; Public Meeting

Notice is hereby given in accordance with Public Law 92-463 that the Actuarial Advisory Committee will hold a meeting on July 25, 1979, at the offices of the Chief Actuary of the U.S. Railroad Retirement Board, 844 North Rush Street, Chicago, Illinois, on the conduct of the 14th Actuarial Valuation of the Railroad Retirement Account. The agenda for this meeting will include a discussion of the results and presentation of the 14th Actuarial Valuation. It is expected that the text and the tables which constitute the Valuation will have been prepared in presumed-final form for review by the Committee and that this will be the last meeting of the Committee before publication of the Valuation.

The meeting will be open to the public. Persons wishing to submit written statements or make oral presentation should address their communications or notices to the RRB Actuarial Advisory Committee, c/o Chief Actuary, U.S. Railroad Retirement Board, 844 North Rush Street, Chicago, Illinois 60611.

Dated: June 27, 1979.

By Authority of the Board.

R. F. Butler,

Secretary of the Board.

[FR Doc. 79-20866 Filed 7-5-79; 8:45 am]

BILLING CODE 7905-01-M

SMALL BUSINESS ADMINISTRATION

[License No. 02102-0357]

Atalanta Investment Co., Inc.; Issuance of a License To Operate as a Small Business Investment Company

On March 16, 1979, a Notice was published in the Federal Register (44 FR 16058) stating that Atalanta Investment Company, Inc., 450 Park Avenue, New York, New York 10022, had filed an application with the Small Business Administration pursuant to § 107.102 of the SBA Rules and Regulations governing small business investment companies (13 CFR 107.102 (1979)), for a license to operate as a small business investment company (SBIC).

Interested parties were given until the close of business March 31, 1979, to submit their comments. No comments were received.

Notice is hereby given that, having considered the application and all other pertinent information, SBA on June 22, 1979, issued License No. 02/02-0357 to Atalanta Investment Company, Inc., pursuant to Section 301(c) of the Small Business Investment Act of 1958, as amended.

(Catalog of Federal Domestic Assistance Program No. 59.011, Small Business Investment Companies)

Dated: June 28, 1979.

Peter F. McNeish,

Acting Associate Administrator for Finance and Investment.

[FR Doc. 79-20920 Filed 7-5-79; 8:45 am]

BILLING CODE 8025-01-M

[Proposal No. 10/10-0168]

Market Acceptance Corp.; Application for a License as a Small Business Investment Company

Notice is hereby given of the filing of an application with the Small Business Administration pursuant to Section 107.102 of the SBA Regulations (13 CFR 107.102 (1979)), by Market Acceptance Corporation, 1111 N.W. Market Street, Seattle, Washington 98107, for a license to operate as a small business investment company (SBIC) under the provisions of the Small Business Investment Act of 1958 (the Act), as amended (15 U.S.C. 661 *et seq.*).

The proposed officers, directors, and stockholders are:

Name and Address, Title and Relationship, Percent of Ownership

Archie E. Iverson, President and Director, 99 percent, 507 West Mercer, Apartment 801, Seattle, Washington 98119.

Dorothy P. Zaccardo, Secretary and Director, None, 7536 34th Avenue N.E., Seattle, Washington 98115.

Beverly J. Foss, Treasurer and Director, 1 percent, 337 3rd Avenue South, Edmonds, Washington 98020.

The Applicant proposes to begin operations with a capitalization of $300,000 and will be a source of equity capital and long term loan funds for qualified small business concerns. The Applicant intends to render management consulting services to small business concerns.

Matters involved in SBA's consideration of the application include the general business reputation and character of the proposed owners and management, and the probability of successful operations of the new company under their management, including adequate profitability and financial soundness, in accordance with the Act and Regulations.

Notice is further given that any person may, not later than 15 days from the date of publication of this Notice, submit written comments on the proposed SBIC to the Acting Associate Administrator for Finance and Investment, Small Business Administration, 1441 "L" Street, N.W., Washington, D.C. 20416.

A copy of this Notice will be published in a newspaper of general circulation in Seattle, Washington.

(Catalog of Federal Domestic Assistance Program No. 59.011, Small Business Investment Companies)

Dated: June 28, 1979.

Peter F. McNeish,

Acting Associate Administrator for Finance and Investment.

[FR Doc. 79-20929 Filed 7-5-79; 8:45 am]

BILLING CODE 8025-01-M

Optional Peg Rate

The Small Business Administration publishes on a quarterly basis an interest rate called the optional "peg" rate (13 CFR § 120.3(b)(2)(iii)). This rate is a weighted average cost of money to the government for maturities similar to the average SBA loan. This rate may be used as a base rate for fluctuating interest rate SBA loans.

For the July-September quarter of 1979, this rate will be nine and one-fourth (9¼) percent.

Dated: June 28, 1979.

A. Vernon Weaver,

Administrator.

[FR Doc. 79-20931 Filed 7-5-79; 8:45 am]

BILLING CODE 8025-01-M

DEPARTMENT OF STATE

Agency for International Development

AID Missions and Offices in Near East Region

Amendment No. 1 to Redelegation of Authority No. 5.15, also Numbered 38.13, 40.5 and 113.3.

Paragraph 5 of Redelegation of Authority No. 5.15, 38.13, 40.5 and 113.3 dated September 20, 1978 is revised to read as follows:

* * * * *

5. The authorities herein redelegated may be exercised by a person serving in

an "Acting Director" or "Acting Representative" capacity and may be redelegated but not successively redelegated, except that for countries other than Egypt the authorities enumerated in paragraph 1, paragraph 2(e) with respect to approval of the terms of country contracts, and amendments and modifications thereto of over a 10 percent increase in total contract price, and paragraph 2(f) may not be redelegated; for Egypt the authorities enumerated in paragraphs 1 and 2(f) may not be redelegated.

All other provisions of Redelegation No. 5.15, 38.13, 40.5 and 113.3 remain unchanged and in full force and effect. This amendment is effective immediately.

Dated: June 25, 1979.

Joseph C. Wheeler,

Assistant Administrator, Bureau for Near East.

[FR Doc. 79-20867 Filed 7-5-79; 8:45 am]

BILLING CODE 4710-02-M

TENNESSEE VALLEY AUTHORITY

Implementation of Procedures on the National Environmental Policy Act

AGENCY: Tennessee Valley Authority.

ACTION: Proposed procedures implementing the National Environmental Policy Act.

SUMMARY: On November 29, 1978, the Council on Environmental Quality (CEQ) promulgated regulations establishing uniform procedures for implementing the procedural provisions of the National Environmental Policy Act. CEQ required Federal agencies to adopt appropriate procedures to supplement their regulations. As a result, TVA is proposing to amend its internal procedures to take into account this initiative.

DATE: Written comments will be received with respect to these proposed procedures. Comments must be received on or before August 6, 1979.

ADDRESS: Written comments and requests for additional information should be addressed to Dr. Harry G. Moore, Jr., Acting Director of Environmental Quality, Tennessee Valley Authority, 268 401 Building, Chattanooga, Tennessee 37401.

Proposed Procedures

For Compliance With the National Environmental Policy Act

Table of Contents

1. Purpose.
2. Policy.
3. Scope.
4. References.
5. Abbreviations.
6. Procedures.
6.1 Action Formulation and NEPA Determination.
6.2 Categorical Exclusions.
6.3 Limited Categorical Exclusions.
6.4 Environmental Assessments.
6.5 Environmental Impact Statement (EIS).
6.6 Predecision Referrals.
6.7 Mitigation Commitment Identification, Auditing, and Reporting.
6.8 Adoption of Another Federal Agency's EIS.
6.9 Emergency Action.
6.10 Miscellaneous Procedures.
7. Definitions.
7.1 Categorical Exclusion.
7.2 Class-Action EA
7.3 Compliance Plan.
7.4 Cooperating Agency.
7.5 Environmental Assessment.
7.6 Environmental Impact Statement.
7.7 Errata Sheet.
7.8 Finding of No Significant Impact.
7.9 Lead Agency.
7.10 Limited Categorical Exclusion.
7.11 Mitigation.
7.12 Mitigation Confirmation Report.
7.13 Notice of Intent to Prepare an Environmental Assessment.
7.14 Notice of Intent to Prepare an Environmental Impact Statement.
7.15 Other Interested Offices.
7.16 Predecision Referral.
7.17 Record of Decision.
7.18 Scope.
7.19 Special Expertise.
7.20 Tiering.

Proposed Implementing Procedures

Environmental Review Procedures

1. *Purpose*

This code provides guidance for compliance by TVA with the National Environmental Policy Act, 42 U.S.C. §§ 4321, et seq. (1970) (NEPA) and other applicable guidelines, regulations, and Executive Orders implementing NEPA. It is intended to incorporate the concepts and implement the policies in the regulations promulgated by the Council on Environmental Quality (CEQ) at 40 CFR Parts 1500-1508 (43 *Fed. Reg.*, 55978-56007 [1978]).

2. *Policy*

TVA, to the fullest extent possible, directs its policies, plans, and programs to protect and enhance environmental quality. In carrying out this policy, these instructions assure that actions are viewed in a manner to encourage productive and enjoyable harmony between man and the environment. Commencing at the earliest possible point, and continuing through implementation, appropriate and careful consideration of the environmental aspects of proposed actions is built into the decision-making process in order that adverse environmental effects may be avoided or minimized.

3. *Scope*

This procedure is applicable to all decision-making activities to TVA including actions of, permitted by, or approved by TVA and proposals for legislation.

4. *References*

—The National Environmental Policy Act (Pub. L. 91-190, 42 U.S.C. §§ 4321-4347 [1970]).

—The Environmental Quality Improvement Act of 1970, as amended (42 U.S.C. 4371 et seq.).

—Section 309 of the Clean Air Act, as amended (42 U.S.C. 7609).

—Executive Order 11514, Protection and Enhancement of Environmental Quality (March 5, 1970, as amended by Executive Order 11991, May 24, 1977).

—Executive Order 11988, Floodplain Management, May 24, 1977.

—Executive Order 11990, Protection of Wetlands, May 24, 1977.

—Council on Environmental Quality NEPA Regulations 40 CFR Parts 1500-1508 (November 29, 1978).

—The National Historic Preservation Act of 1966.

—The Endangered Species Act of 1973.

—Executive Order 11593, Protection and Enhancement of the Cultural Environment.

5. *Abbreviations*

5.1 Board—The Tennessee Valley Authority Board of Directors

5.2 CEQ—The Council on Environmental Quality

5.3 EA—Environmental Assessment

5.4 EQS—Environmental Quality Staff, Office of Natural Resources, Tennessee Valley Authority

5.5 ECS—Environmental Compliance Staff, Office of Management Services, Tennessee Valley Authority

5.6 EIS—Environmental Impact Statement—D-Draft; P-Preliminary; F-Final

5.7 EPA Environmental Protection Agency

5.8 GM—Office of the General Manager, Tennessee Valley Authority

5.9 NEPA National Environmental Policy Act

5.10 Office, Division, Branch, or staff—A Tennessee Valley Authority Office, Division, Branch or staff

5.11 OGC—Office of the General Counsel, Tennessee Valley Authority

5.12 TVA—The Tennessee Valley Authority

6. *Procedures*

6.1 *Action Formulation and NEPA Determination*

Each office is responsible for integrating environmental considerations into its planning process at the earliest possible time to ensure that potential environmental effects are appropriately considered, to avoid potential delays, and to minimize potential conflicts. Environmental analyses are to be included in or circulated with and reviewed at the same time as other planning documents. This responsibility is to be carried out in accordance with the environmental review procedures contained herein.

At the earliest practicable time the office proposing to initiate an action will initially determine the level of environmental review required for a specific action. An action will be in one of the following categories:

	Procedure	Definition
Categorical Exclusion	6.2	7.1
Limited Categorical Exclusion	6.3	7.10
Environmental Assessment	6.4	7.5
Environmental Impact Statement	6.5	7.6

This initial determination may be revised by the Board or GM at any time in the decision-making process. The initiating office, Environmental Quality Staff (EQS), or OGC in consultation with other interested offices may recommend that the initial determination be revised as additional information is made available.

6.2 *Categorical Exclusions*

Actions listed as categorical exclusions in 7.1 normally do not require the preparation of an environmental assessment (EA) or an environmental impact statement (EIS). The initiating office will determine whether or not the proposed action qualifies for treatment as a categorical exclusion. Once this determination is made, the initiating office in consultation with other interested offices as appropriate will determine whether or not any special circumstance or public controversy associated with the proposed action warrants the preparation of an EA or an EIS.

If no special circumstance or public controversy is involved, then further environmental review of the proposed action is left to the discretion of the initiating office manager. EQS and other interested offices will, upon request, assist the initiating office in addressing any special environmental circumstances or public controversy associated with an action listed in 7.1.

6.3 *Limited Categorical Exclusions*

An action listed in 7.10 will normally not require preparation of an EA, but the initiating office must seek the concurrence of EQS in each case.

The initiating office will determine whether or not the proposed action qualifies for treatment as a limited categorical exclusion. Once this determination is made, the initiating office will consult with EQS and describe the proposed action, its probable environmental effects, and potential controversial aspects. Based on this information, EQS will make one of the following determinations: (1) the action qualifies as a categorical exclusion; (2) the decision will be deferred until a later stage in the planning process, or (3) the action will require the preparation of an EA as described in 6.4 (Environmental Assessments). If a categorical exclusion is granted, then further environmental review of the proposed action will be left to the discretion of the initiating office manager. If the initiating office does not agree with the determination made by EQS, it may refer the matter to the GM.

EQS in consultation with the initiating office and other interested offices may identify measures to mitigate environmental impacts of an action as described in 6.7 (Mitigation Commitment Identification, Auditing, and Reporting).

6.4 *Environmental Assessments*

6.4.1 Purpose and Scope

An environmental assessment (EA) as defined in 7.5 will be prepared for any action not qualifying as a categorical exclusion. For an action requiring an environmental impact statement (EIS), a "scoping" EA will normally be prepared to serve as a basis for the scoping process. This "scoping" EA will not require the review and public involvement normally a part of the EA process, nor will it contain environmental commitments.

6.4.2 Notice of Intent to Prepare an EA

TVA may, in its discretion, publish a Notice of Intent to Prepare an EA (defined in 7.13). In determining whether or not to publish a notice, EQS, in consultation with the initiating office, should consider:

1. The complexity of the issues and the likelihood that public input will assist TVA in analyzing a proposed action;

2. The extent to which public involvement has already been achieved; and

3. Whether the proposed action will occur in a floodplain or a wetland.

If it is determined that a notice should be prepared, the initiating office will prepare and transmit it to EQS and OGC. If it is approved by EQS, in consultation with OGC, EQS will forward it to the Information Office for release. Normally a 15-day public comment period shall be provided from the date of publication. EQS, in consultation with the initiating office, may extend the public comment period if it is determined that an extension would be in TVA's interest. If special consultation with other agencies is desirable, the notice shall be sent to such agencies with EQS's approval after consultation with OGC.

6.4.3 EA Preparation

The initiating office in consultation with EQS and other interested offices is responsible for the preparation of the EA as defined in 7.5. The EA will include the identification, and as appropriate, discussion of questions and concerns raised during the public input period.

At the close of the specified public input period and upon completion of an internal review involving other interested offices, EQS will in consultation with the Office of the General Counsel (OGC) make one of the following determinations: (1) the action does not require the preparation of an EIS; (2) the action will require the preparation of an EIS; or (3) the EA is incomplete and/or the decision will be deferred until a later stage in the planning process. If the action does not require the preparation of an EIS, the initiating office or EQS will prepare, and EQS will issue a Finding of No Significant Impact as defined in 7.8.

If an EA is for any reason incomplete and must await a determination at a later stage in the planning process, EQS may revise, as appropriate, the Notice of Intent to Prepare an Environmental Assessment and if necessary extend the public input period. If the action requires the preparation of an EIS, the EIS will be prepared by the initiating office as described in 6.5 (Environmental Impact Statements).

EQS or the initiating office in consultation with each other and other interested offices will identify, and ECS will audit, and report to the GM on environmental mitigation measures committed to in the EA as described in 6.7 (Mitigation Commitment Identification, Auditing, and Reporting).

If the initiating office or other interested offices do not agree with the determination made by EQS during any

phase of the EA process, the action may be referred to the GM.

6.4.4 EA Public Comment Period

The Finding of No Significant Impact (Finding) will be prepared by either the initiating office or by EQS for all EA actions not requiring an EIS. The Finding will be reviewed by EQS and made available to the public by EQS in cooperation with the Information Office. The Finding will be made available for 30-day public review if: (1) the proposed action is, or is closely similar to, one which normally requires preparation of an EIS; (2) the nature of the proposed action is one without precedent; or (3) ECS in consultation with the initiating office and other interested offices determined that the longer review period would improve the decision-making process. The initiating office in consultation with EQS, will prepare responses, as appropriate, to all comments received during the public comment period. The responses will be approved and transmitted by EQS.

If EQS in consultation with the initiating office determines that the information obtained during the public comment period does not significantly alter the Finding of No Significant Impact, the action will not require further environmental review. If, however, EQS in consultation with the initiating office determines that circumstances and issues raised during the public comment period warrant further review, the initiating office in consultation with EQS and other interested offices will revise the EA to include, as appropriate, this additional public input. EQS in consultation with the initiating office, OGC, and the Information Office will determine further review requirements for the revised EA. The EA will then be reviewed as before.

6.4.5 Additional Public EA Review

At any time in the EA process, EQS in consultation with the initiating office, the Information Office, and OGC may recommend to the GM additional public involvement to supplement EA preparation. The type of and format for public involvement would be selected as appropriate to best facilitate timely and meaningful public input into the EA process. In the event that a public meeting is held, the initiating office will provide a meeting synopsis, comments, and comment responses, as appropriate, that will be incorporated into the EA. The Information Office will normally coordinate public EA review in cooperation with EQS and interested offices.

6.4.6 Class-Action EA

For any class of actions not described in 6.2 (Categorical Exclusions), the initiating office may prepare a class-action EA as defined in 7.2 if actions in the class normally have no significant environmental impacts. The class-action EA will be prepared, reviewed, and approved as would any other EA. Upon completion of review, EQS in consultation with OGC will make one of the following determinations: (1) the proposed class-action may normally be treated as if listed in 6.2 as a categorical exclusion; (2) the proposed class-action may normally be treated as if listed in 6.3 as a limited categorical exclusion; (3) the proposed subclass action does not warrant special consideration and each action will require individual EA preparation; or (4) the subclass EA is inadequate and/or the decision will be deferred until a later stage in the planning process.

6.5 *Environmental Impact Statements (EIS)*

6.5.1 Purpose and Scope

An EIS will normally be prepared for each action listed in 7.6. For other actions an EIS will be prepared if it is determined to be a major action sigificantly affecting the quality of the human environment during the environmental review process. An EIS will provide a full and fair discussion of major actions and will in conjunction with other relevant material, be used to plan and make decisions.

The scope of the EIS as defined in 7.18 will include information concerning the range of actions, alternatives, and probable impacts of the action. Offices should consider the need for EIS preparation for successive "tiers" of decisions as defined in 7.20, beginning with policy, followed by program, and then finally project level decisions.

6.5.2 Lead and Cooperating Agency Determinations

As soon as possible after the decision is made to prepare an EIS, normally on the basis of an EA determination as described in 6.4 (Environmental Assessments), the appropriate TVA organization in coordination with the intiating office will contact appropriate Federal, State, and local agencies to identify lead and cooperating agency responsibilities concerning EIS preparation as described in the CEQ regulations. EQS in consultation with OGC, and the intiating office, will then recommend to the GM that the agency should have one of the following responsibilites: Lead agency (7.9); Cooperating agency (7.4).

6.5.3 Scoping Process

If it is determined that TVA is the lead agency, the initiating office will organize a scoping committee to tentatively define action alternatives, probable environmental issues, and a schedule for EIS preparation. The scoping committee will consist of one member each from EQS, the intiating office, the Information Office, OGC, and other interested or affected offices.

EQS will assure that the scoping process complies with these procedures. The initiating office will oversee the scoping committee for each action requiring scoping. The initiating office will make available details concerning the proposed action and will make presentations at the various scoping sessions explaining the proposed action. OGC will advise the scoping committee about legal matters concerning the proposed action and the scoping process. OGC will also furnish a hearing officer and conduct public hearings if that format is used. The Information Office will also furnish a meeting officer and conduct public meetings if that format is used. Other offices and divisions will furnish members to serve on the scoping committee as requested to furnish technical input as required during the environmental review process.

The scoping committee shall tentatively decide what further meetings will be required and shall set dates and decide on locations for these meetings, if any. The scoping process may consist of any one, combination, or all three of the following sessions: (1) internal scoping by interested offices; (2) interagency scoping to coordinate action with and obtain inputs from other interested agencies; and (3) public scoping to obtain input from interested members of the general public. The scoping committee will determine the need, nature, and format for the various scoping sessions. Session types and format will be selected by the scoping committee as appropriate to best facilitate timely and meaningful input into the EIS process.

As soon as practicable in the scoping process, the intiating office will prepare and EQS will review and make available a Notice of Intent to Prepare an EIS as defined in 7.14. There will normally be a public input period of at least 30 days from the date of publication of the Notice of Intent in the Federal Register to allow other interested agencies and the public an opportunity to review the action

alternatives and probable environmental issues, identified by the scoping committee. On the basis of input received from continuing internal review, from other interested agencies, and from the public, the scoping committee may determine what, if any, additions or modifications in the scoping process or schedule are required.

At the close of the scoping process, the initiating office in consultation with EQS and the scoping committee will identify and document the following EIS components: (1) key action alternatives; (2) significant environmental issues to be addressed in detail; (3) probable nonsignificant environmental issues that should be mentioned but not addressed in detail, (4) lead and cooperating agency assignments, (5) related environmental documents; and (6) other environmental review and consultation requirements.

6.5.4 DEIS Preparation

Based on information obtained and decisions made during the scoping process, the initiating office, in consultation with EQS and other interested offices, will prepare the Preliminary DEIS as defined in 7.6. The Preliminary DEIS will be circulated by the initiating office to EQS, OGC, and other interested offices for review and comment. All reviewing offices will as soon as practicable, and normally within 30 days, supply written comments concerning the Prelimianry DEIS to the initiating office and EQS. Thses comments will include lists of agencies, A-95 contacts, groups, and individuals who should receive a copy of the DEIS. These lists should include those who might be opposed to the proposed action. In cases where the internal written review uncovers significant new information, significant program conflicts, or involves major policy issues, the initiating office in consultation with EQS and interested offices will conduct an internal review meeting. The internal review meeting may also be held in lieu of submitting written comments if the initiating office determines that it is desirable.

If program conflicts develop during the internal review process, EQS will resolve them or recommend a course of action to the GM. The initiating office will transmit the preliminary DEIS to other interested offices for their final approval. When approval from all involved offices is received, EQS will review the document and upon approval transmit it to the GM.

Upon receipt of the Preliminary DEIS the GM may make one of the following determinations: (1) the action is satisfactorily assessed; (2) the proposed action is not satisfactorily assessed; or (3) the action does not warrant further consideration.

If the action is satisfactorily assessed, the GM may approve and return the DEIS to EQS. EQS will then release the DEIS as described in 6.5.5 (DEIS Transmittal). If the GM determines that the Preliminary DEIS does not satisfactorily address the action, the GM will contact EQS which will reinitiate and coordinate the requisite revised DEIS as described above. The revision will be resubmitted for written office manager signoff if necessary and then resubmitted to the GM with EQS recommendations. If the GM determines that the action does not warrant further consideration, the GM will so notify EQS, the initiating office, and other interested offices.

6.5.5 DEIS Transmittal

Upon notification of approval from the GM, EQS will transmit the DEIS and appropriate notices to EPA and other Federal Agencies. The Information Office will coordinate overall DEIS distribution and will maintain a master list of those who receive it. The length of the DEIS public comment period will normally be no less than 45 days from publication of the notice of availability in the Federal Register. Copies of an EIS are normally provided free of charge unless the quantity, volume of demand, or the costs of distribution are unreasonable. Where the costs of free distribution appear unreasonable, the Information Office, after consultation with appropriate offices, will establish a fee for such materials which does not exceed the actual cost of their reproduction.

6.5.6 Additional Public DEIS Review

At any time in the DEIS process, EQS in consultation with the initiating office, the Information Office, and OGC may recommend to the GM additional public involvement to supplement DEIS preparation. The type of and format for public involvement would be selected as appropriate to best facilitate timely and meaningful public input into the EIS process.

6.5.7 FEIS Preparation

At the close of the DEIS public review period, normally 45 days or longer as determined by EQS, EQS will in consultation with the initiating office and other interested offices, determine the need for the preparation of a FEIS. If the requisite changes in the DEIS are limited to making factual corrections and explaining why the comments received do not warrant further response, an Errata Sheet containing only DEIS comments, responses, and changes as defined in 7.7, may be prepared by the initiating office. If other more extensive modifications are required, the initiating office will, in consultation with EQS and other interested offices, prepare a Preliminary FEIS as defined in 7.6. The Errata Sheet or Preliminary Final EIS will be prepared and circulated by the initiating office to EQS, OGC, the Information Office, and other interested offices for review and comment. All reviewing offices will supply written comments concerning the Errata Sheet or Preliminary Final EIS to the initiating office with copies to EQS and OGC.

The initiating office, with the advice and assistance of EQS, will review all comments received and modify, as appropriate, the Errata Sheet or the Preliminary FEIS. The internal review of the Errata Sheet or FEIS will be conducted under the same procedures as the DEIS as described in 6.5.4 (DEIS Preparation). Upon receipt of written office manager signoff, the revised Errata Sheet or revised preliminary Final EIS will be forwarded with recommendations by EQS to the GM for final approval along with a list of environmental commitments made in the EIS as described in 6.7 (Mitigation Commitment Identification, Auditing, and Reporting).

Upon receipt of the Preliminary Final Errata Sheet or Preliminary FEIS, the GM may make one of the following determinations: (1) the action is satisfactorily assessed; (2) the proposed action is not satisfactorily assessed; or (3) the action does not warrant further consideration.

If the action is satisfactorily assessed in the Preliminary Final Errata Sheet or Preliminary FEIS, the GM may approve the document as the final EIS and return it to EQS for transmittal as described in 6.5.8 (FEIS Transmittal). If the GM determines that the document does not satisfactorily assess the action, the GM will contact EQS which will initiate and coordinate the requisite revisions. The revisions will be resubmitted by EQS for office manager signoff if necessary and then resubmitted to the GM for approval. If it is determined that the action does not warrant further consideration, the GM will so notify EQS, the initiating office, and other interested offices.

EQS in consultation with the initiating office and other interested offices will identify, and ECS will audit and report on environmental mitigation measures committed to in the FEIS as described in

6.7 (Mitigation Commitment Identification, Auditing, and Reporting).

6.5.8 FEIS Transmittal

This procedure is the same as that outlined in 6.5.5 (DEIS Transmittal) except there will be no comment period.

6.5.9 Revisions and Supplements

At any time during the action planning process that any significant information concerning action modifications, alternatives, probable environmental effects, or adverse public reaction becomes available, the initiating office shall prepare a revision or a supplement to any environmental document. EQS will in consultation with the initiating office, OGC, and other interested offices determine whether and in what form to incorporate the supplemental information into the preparation of the existing EIS or require the preparation of a new EIS or supplement.

6.5.10 Record of Decision

After publication of the FEIS, a Record of Decision as defined in 7.17 shall be prepared by the GM or its designee.

6.6 *Predecision Referrals*

EQS in consultation with OGC, other interested offices, and the GM will prepare and coordinate agency environmental referrals and agency response to referrals as provided for in Part 1504 of the CEQ regulations.

6.7 *Mitigation Commitment Identification, Auditing, and Reporting*

All measures which are planned to minimize or mitigate expected significant environmental impacts shall be identified in the EIS or EA without regard to whether or not the proposed action is determined to be a major Federal action significantly affecting the quality of the human environment within the meaning of NEPA. Each such commitment will be tentatively assigned by the initiating office to the appropriate responsible office and such assignments shall be transmitted to ECS, EQS, and the affected offices. The initiating office should consult with the assigned offices to resolve assignment conflicts, to identify supporting offices, and to determine schedules for commitment resolution as necessary. The initiating office will report to ECS on a specified schedule the status of commitment resolution. ECS may, in its discretion, require an assigned office to draft a compliance plan as defined in 7.3. The assigned office should coordinate the compliance plan with other interested offices and transmit the plan to ECS for review and comment. ECS may also, in its discretion, request additional periodic inspections and request or perform audits and reports. In addition, ECS, in consultation with the initiating office, may, in its discretion, identify other commitments made in the EIS or EA and followup on such commitments.

ECS may prepare periodic reports to the GM concerning the status of commitment resolution. Upon receipt of a mitigation confirmation report as defined in 7.12, ECS shall close the file on the commitment. When resolution of all indentified commitments associated with an EA or an EIS is completed, ECS shall forward copies of all mitigation confirmation reports to EQS which shall file them with the EA or EIS.

6.8 *Adoption of Another Federal Agency's EIS*

The initiating office may adopt another Federal agency DEIS or FEIS or portion thereof provided that the EIS or portion thereof meets agency standards. Adoption procedures may be applied to lead and cooperating agency actions.

The outside agency DEIS or FEIS will be reviewed internally as described in 6.5 (Environment Impact Statements). EQS will, after consultation with the initiating office, OGC, and other interested offices, determine whether or not the outside agency statement or portion thereof is adequate. If the statement does not meet these requirements, the EIS cannot be adopted. If the EIS does meet these requirements, the draft or final EIS or portions thereof may be used as described in CEQ regulations, Part 1506.3 (Adoption).

6.9 *Emergency Action*

Because of unforeseen situations or emergencies, or through inadvertence, or for other reasons, some of the steps outlined in procedures may be consolidated, modified, or omitted by offices. EQS should be promptly asked to approve any such consolidation, modification, or omission, and may do so if such change would conform to legal requirements and substantially comply with the intent of this code. EQS in consultation with OGC will consult with CEQ as it deems appropriate before approving such changes.

6.10 *Miscellaneous Procedures*

6.10.1 Proposals for Legislation

Proposals for Congressional legislation significantly affecting the quality of the human environment will require the preparation of an EIS as described in CEQ regulations, Part 1506.8 (Proposals for Legislation).

6.10.2 Private Applicants

In those cases when private applicants or other non-Federal entities propose to undertake an action that will require TVA's approval or involvement, that office first learning of the proposed action will refer the applicant or requesting party to EQS. EQS, in consultation with the office charged with the responsibility of initiating action upon the applicant or requesting party's request, should, when practicable, advise the applicant or requesting party of the information or studies (including the preparation of an EA, if necessary) that will be required in order for TVA to fulfill its responsibilities hereunder. The applicant or requesting party must provide to TVA sufficient information to allow an accurate determination of the environmental impacts of the proposed action. TVA may require that this information be submitted in the form of a written environmental report. If TVA is required to make investigations or otherwise incur additional expenses, the applicant can be charged for TVA's service. EQS with the concurrence of OGC, will also determine the need to consult early with appropriate Federal, State, and local agencies, Indian tribes, and other interested persons regarding TVA's involvement in or approval of the applicant's proposed action and, where appropriate, should commence such consultation at the earliest, practicable time.

6.10.3 Outside Agency EIS Review

EQS, in consultation with other interested offices, will review EIS's within TVA's jurisdiction, special expertise, (see 7.19) or authority submitted to TVA by other Federal agencies. EQS will prepare responses to such statements and will, after approval by OGC, transmit such responses to the initiating agency (CEQ regulations 1503.2 and 3).

6.10.4 Supplemental Instruction

EQS, in consultation with interested offices and with the concurrence of OGC, may issue supplemental or explanatory instructions to these procedures.

6.10.5 Modifications of These Procedures

The assignments to offices in these procedures can be modified by agreement of the offices involved or by instructions from the GM.

6.10.6 Tiering

An initiating office may consider tiering the environmental review of a

proposed action. Tiering involves coverage of general matters in broader environmental documents and subsequent narrower analyses need only incorporate by reference the broader analyses. (See also 7.20—Tiering.)

6.10.7 Judicial Review

TVA intends that judicial review of its compliance with these procedures shall not occur before TVA publishes an FEIS or a Finding of No Significant Impact. Further, any trivial violation of these procedures shall not give rise to any independent cause of action.

6.10.8 Combining Documents

Any environmental document may be combined with any other document to reduce duplication and paperwork.

6.10.9 Applicability to Ongoing Actions

These procedures shall not apply to those actions which have been approved under applicable procedures prior to the effective date of these procedures or for which an EA or a DEIS has already been prepared. No environmental documents need be redone by reason of the adoption of these revised procedures.

6.10.10 Consolidation of Reviews

Review of proposed actions under these procedures may be consolidated with other reviews where such consolidation would reduce duplication and/or increase efficiency.

6.10.11 Commencement of Action

An action for which an EIS has been approved should not commence until 30 days after notice of availability for the final statement has been published in the Federal Register or 90 days after a notice of availability of the DEIS has been published in the Federal Register whichever is later, except where a shorter time period is allowed in accordance with these procedures or CEQ regulations.

Definitions—Proposed Instructions

TVA Procedures for Implementing Council on Environmental Quality Regulations

7. Definitions

7.1 *Categorical Exclusion*

(See also 7.10, Limited Categorical Exclusion) "Categorical exclusion" means a category of actions which do not individually or cumulatively have a significant effect on the human environment and for which, therefore, neither an environmental assessment nor an environmental impact statement is normally required. Categorical exclusion actions are:

1. Routine operation, maintenance, and minor upgrading of existing TVA facilities.
2. Technical and planning assistance to State and local organizations.
3. Establishment of environmental quality monitoring programs and field monitoring stations.
4. Procurement contracts.
5. Personnel actions.
6. Contracts for the sale, purchase, or interchange of electricity.
7. Accounting, auditing, financial reports, and disbursement of funds.
8. Communications, transportation, computer services, and other office services.
9. Activities related to the promotion and maintenance of employee health.
10. Activities of TVA's Equal Employment Opportunity staff.
11. Preliminary planning, studies, or reviews consisting of only paperwork.
12. Research tests conducted entirely in the laboratory.
13. Projects which consist of joining an organization.
14. Work done under blanket contracts with universities for consultant time.
15. Visitor reception.
16. Property protection and law enforcement.
17. Emergency preparedness.
18. Minor non-TVA activities on TVA property authorized under license, permit, and covenant agreements, including utility crossings, encroachments, agricultural uses, rental of structures, and sale of miscellaneous structures and materials from TVA land.
19. Sale or abandonment of minor tracts of power land or landrights.
20. Transmission line relocation or modifications due to conflicts such as new highway projects and projects requiring acquisition of small amounts of additional substation property or transmission line right of way easements.
21. Construction and operation of communication facilities (i.e., powerline carrier, insulated overhead ground wire, VHF radio, and microwave).
22. Purchase and lease-purchase of stepdown facilities by TVA directly-served customers.
23. Exploration for uranium, including hydrologic investigations.
24. Backslope agreements on properties for which TVA holds an interest between operators and other adjacent mining companies.
25. Actions which were successfully treated as class-action EA's.

Limitations for Categorical Exclusions

An EA should be prepared when the action is environmentally controversial; would affect wetlands or floodplains; involves large tracts of land or would result in a significant change in land use or land use plans; has the potential to affect areas of natural, scenic, or cultural importance; or when other special circumstances exist.

7.2 *Class-action EA*

"Class-action EA" means a concise public document that provides a generic assessment of probably environmental effects of a certain class of actions (see also, 7.1, Categorical Exclusion and Limited Categorical Exclusion) that normally have no significant environmental impacts. Class-action EA preparation and review are conducted in the same manner as any other EA (see also, 7.5, Environmental Assessment).

7.3 *Compliance Plan*

"Compliance Plan" means a plan written by the responsible TVA organization and reviewed by ECS to ensure the implementation of environmental mitigation commitments identified in the EA or FEIS. It will include a schedule for meeting commitments and will establish monitoring and reporting frequencies.

7.4 *Cooperating Agency*

"Cooperating agency" means any Federal agency other than a lead agency which has jurisdiction by law or special expertise with respect to any environmental impact as described in CEQ regulations, Part 1508.5 (Cooperating Agency).

7.5 *Environmental Assessment*

7.5.1 "Environmental Assessment" (EA) means a concise public document that serves to:

1. Briefly provide sufficient evidence and analysis for determining whether to prepare an environmental impact statement or a finding of no significant impact.
2. Aid in compliance with NEPA when no environmental impact statement is necessary.
3. Facilitate preparation of a statement when one is necessary, including being the basis for the scoping process.

7.5.2 The EA will consist of:

1. A need or opportunity section which describes briefly the need or opportunity for the proposed action.
2. The proposal section will contain details of the proposed action and a description of the favored alternatives

including the no action alternative. In addition, this section will include an identification and description of all requisite permits, licenses, and other environmental approvals.

3. An examination of the anticipated environmental impacts of the proposal and alternatives compared with projected impacts of the no action alternative. Energy requirements and conservation potential of various alternatives and mitigation measures will also be addressed. Adverse impacts that cannot be avoided should be discussed.

4. A summary of implications to outside agencies and governments, including consideration of their plans and required permits, licenses, and approvals.

5. A description of public input and environmental controversy that have developed concerning the proposal. There should be a discussion of the resolution of all significant issues raised in the environmental review process.

6. If floodplains or wetlands are involved, there will be a description of the areas affected and their significance prepared in accordance with TVA Code IX, Floodplain Management and Protection of Wetlands.

7. A description of any threatened or endangered species and identification of any cultural resources.

8. A discussion of any short-term uses of the environment caused by the proposed action that might preclude a long-term use.

9. Any irreversible or irretrievable commitments of resources should be identified.

7.6 *Environmental Impact Statement*

"Environmental impact statement" (EIS) means a detailed written statement as required by Section 102(2)(C) of NEPA. An EIS may be written for successive levels or tiers (see Tiering, 7.20) of decisions starting with policy level and proceeding to programs and finally projects.

7.6.1 EIS's are normally prepared for the following actions:

1. Large water resource development and water control projects.
2. The choice of future power generating alternatives.
3. New power generating projects.
4. Major transmission system additions, 500-kV and above.
5. Addition of new navigation locks.
6. New town projects.
7. System-wide vector control and watermilfoil control programs.
8. Any major action, the environmental impact of which is expected to be highly controversial.
9. Any other major action which, based on the EA is expected to have a significant effect on the quality of the human environment.

7.6.2 The EIS will normally use the following format:

1. Cover Sheet.
2. Summary.
3. Table of Contents.
4. Purpose of and Need for Action.
5. Alternatives Including proposed Action.
6. Affected Environment.
7. Environmental Consequences.

—Environmental impacts of the proposed action.

—Any adverse environmental effects which cannot be avoided.

—The relationship between local short-term uses of man's environment and the maintenance and enhancement of long-term productivity.

—Any irreversible and irretrievable commitments of resources which would be involved in the proposed action.

—A summary of coordination with other agencies and the public, including issues which were raised and their resolution.

8. List of Preparers.
9. List of Agencies, Organizations, and Persons to Whom Copies of the Statement Are Sent.
10. Index.
11. Appendices (if any).

7.7 *Errata Sheet*

"Errata Sheet" means a concise written statement that may be prepared and attached to the statement instead of rewriting the DEIS if the changes in response to comments are minor and are confined to the following:

1. Making factual corrections.
2. Explaining why the comments do not warrant further agency response, citing the sources, authorities, or reasons which support the agency's position and, if appropriate, indicate those circumstances which would trigger agency reappraisal or further response.

In such cases only the comments, the responses, and the changes and not the final statement need be circulated. The entire document with a new cover sheet will be filed as the FEIS.

7.8 *Finding of No Significant Impact*

"Finding of no significant impact" means a document briefly presenting the reasons why an action, not otherwise excluded will not have a significant effect on the human environment and for which an environmental impact statement, therefore, will not be prepared. It shall include the environmental assessment or a summary of it and shall note any other environmental documents related to it. If the assessment is included, the finding need not repeat any of the discussion in the assessment but may incorporate it by reference.

7.9 *Lead Agency*

"Lead agency" means the agency or agencies preparing or having taken primary responsibility for preparing the environmental impact statement.

7.10 *Limited Categorical Exclusion*

(See also 7.1, Categorical Exclusion) "Limited categorical exclusions" are a category of actions which normally do not require EA's or EIS's but which require the concurrence of EQS in each case. These classes of actions are so designated because of their poorly defined nature or potential for controversy or environmental impacts. The same limitations apply to limited categorical exclusions as apply to categorical exclusions (7.1). Limited categorical exclusions include:

1. Minor research, development, and joint demonstration projects if not meeting the requirements of 7.1.11. (Paperwork studies)
2. Permits under section 26a of the TVA Act for minor structures, boat docks, and shoreline facilities.
3. Acquisition of small amounts of additional land for expansions of existing facilities.
4. Modification, abandonment, and enforcement of restrictive provisions in deeds to property sold by TVA as in the deeds by which TVA acquired flowage and other easement rights.
5. Development of TVA public use areas and stream access points.
6. Mooring cells in waterways to facilitate navigation.
7. Preliminary onsite engineering studies for future power generating plants.
8. Any minor action which the initiating organization thinks may qualify as a categorical exclusion or limited categorical exclusion.

7.11 *Mitigation*

"Mitigation" includes:

1. Avoiding the impact altogether by not taking a certain action or parts of an action.
2. Minimizing impacts by limiting the degree or magnitude of the action and its implementation.
3. Rectifying the impact by repairing, rehabilitating, or restoring the affected environment.
4. Reducing or eliminating the impact over time by preservation and maintenance operations during the life of the action.

5. Compensating for the impact by replacing or providing substitute resources or environments.

7.12 *Mitigation Confirmation Report*

"Mitigation Confirmation Report" means the report from the office responsible for a commitment to ECS stating that an identified EA or FEIS commitment has been met.

7.13 *Notice of Intent To Prepare an Environmental Assessment*

"Notice of Intent to Prepare an Environmental Assessment" means a notice that an EA will be prepared and considered. The notice shall briefly:

1. Describe the proposed action and alternatives.

2. Describe the probable environmental impacts.

3. State the name and address of the Director of EQS who can be contacted for additional information concerning the proposed action and the EA.

7.14 *Notice of Intent To Prepare an Environmental Impact Statement*

"Notice of Intent to Prepare an Environmental Impact Statement" means a notice that an EIS will be prepared and considered. The notice shall briefly:

1. Describe the proposed action and possible alternatives.

2. Describe the proposed scoping process, including whether, when, and where any scoping meeting(s) will be held.

3. State the name and address of the Director of EQS who can be contacted for additional information concerning the proposed action and the EIS.

7.15 *Other Interested Offices*

"Other Interested Offices" means other TVA offices having program interests, responsibilities, or expertise regarding the proposed action or its probable environmental effects.

7.16 *Predecision Referral*

"Predecision Referral" is a provision of the CEQ regulations that establishes procedures for referring to CEQ interagency disagreements concerning proposed major Federal actions that might cause unsatisfactory environmental effects and provides a means for early resolution of such disagreements as described in CEQ regulations, Part 1504 (Predecision Referrals to the Council of Proposed Federal Actions Determined to be Environmentally Unsatisfactory).

7.17 *Record of Decision*

The "Record of Decision" will be a concise public document which will:

1. State what the decision was.

2. Identify all alternatives considered in reaching its decision, specifying the alternative or alternatives which were considered to be environmentally preferable. Preferences among alternatives may be discussed based on relevant factors including economic and technical considerations and agency statutory missions. TVA shall identify and discuss all such factors including any essential considerations of national policy which were balanced by the agency in making its decision and state how those considerations entered into the decision.

3. State whether all practicable means to avoid or minimize environmental harm from the alternative selected have been adopted, and if not, why they were not.

7.18 *Scope*

"Scope" consits of the range of actions, alternatives, and impacts to be considered in an environmental impact statement as described in CEQ regulations, Part 1508.25 (Scope).

7.19 *Special Expertise*

"Special Expertise" means statutory responsibility, agency mission or related program experience.

7.20 *Tiering*

"Tiering" refers to the coverage of general matters in broader environmental impact statements (such as national program or policy statements) with subsequent narrower statements or environmental analyses (such as regional or basin-wide program statements or ultimately site-specific statements) incorporating by reference the general discussions and concentrating solely on the issues specific to the statement subsequently prepared. Tiering is appropriate when the sequency of statements or analyses is:

1. From a program, plan, or policy environmental impact statement to a program, plan, or policy statement or analysis of lesser scope or to a site-specific statement or analysis.

2. From an environmental impact statement on a specific action at an early stage (such as need and site selection) or a subsequent statement or analysis at a later stage (such as environmental mitigation). Tiering in such cases is appropriate when it helps the lead agency to focus on the issues which are ripe for decision snd exclude from consideration issues already decided or not yet ripe.

Harry G. Moore, Jr.,

Acting Director of Environmental Quality.

[FR Doc. 79-20747 Filed 7-5-79; 8:45 am]

BILLING CODE 8120-01-M

Public Utility Regulatory Policies Act of 1978 and the Tennessee Valley Authority Act of 1933; Proposed Determinations on Service Practice Standards

AGENCY: Tennessee Valley Authority (TVA).

ACTION: Notice of Proposed determinations on service practice standards being considered by the TVA Board.

SUMMARY: The TVA Board has proposed its determinations on the service practice standards set out in the notice published in the Federal Register on January 11, 1979 (44 FR 2448). The TVA Board invites comments from interested persons which it will consider before adopting these standards. The standards include those listed in section 113 of the Public Utility Regulatory Policies Act of 1978 (Pub. L. 95-617), and other service practices affecting consumers of TVA power. The TVA Board has considered the proposed standards on the basis of their effect on conservation of energy, efficient use of facilities and resources, and equity among electrical consumers, and the objectives and requirements of the TVA Act.

DATES: Comments in writing must be received by 5 p.m., August 10, 1979, to be assured of being considered.

ADDRESS: Written comments should be sent to Albert O. Daniels, Service Practice Hearings, Tennessee Valley Authority, 540 Market Street, Chattanooga, Tennessee 37402.

FOR FURTHER INFORMATION CONTACT: Dawn S. Ford, Tennessee Valley Authority, 400 Commerce Avenue, E12A2, Knoxville, Tennessee 35902, (615) 632-4402.

PROCEDURES: After further consideration following review of Public comments on the proposed determinations, the TVA Board will make its final determinations as to the standards and whether they should be adopted for TVA and the distributors of TVA power. The final determinations will be published in the Federal Register. All comments received from the public and the final determinations will be placed at those locations where the Transcript of Public Hearings has

been made available for public use. (See 44 FR 2448.)

SUPPLEMENTAL INFORMATION: Of the standards being considered, the Public Utility Regulatory Policies Act of 1978 (Pub. L. 95-617) (PURPA) required that TVA consider standards 1-5. Standards 6-8 involve either provisions presently contained in the wholesale power contracts between TVA and the distributors of TVA power or generally included in individual distributors' Schedule of Rules and Regulations attached to the wholesale power contracts. Standard 9 is a new consideration.

Data, views, and comments were requested from the public as to the need and desirability of changes in the service practices affecting TVA consumers with respect to each of the nine standards. Public hearings, with both morning and evening sessions, were conducted at seven locations throughout the area in which TVA and the distributors serve. In addition to the notice in the Federal Register on January 11, 1979, which described the standards, news releases describing the standards and providing information as to the time and location of the hearings were furnished to the news media throughout the region. Also, advertising providing notification of the hearings and the standards being considered was placed int newspapers in the vicinity of each of the hearings. Arrangements were made at TVA expense with seven law firms for service as public counsel to represent the interests of consumers who otherwise could not afford to participate effectively in the hearings. Prior to the hearings, a Statement of the TVA Office of Power Staff, which described how the nine standards would apply to the TVA system and evaluating the standards in light of available data, was prepared and made available to the public.

Attendance at the public hearings totaled about 1,000 people, with nearly 200 speaking. In addition, considerable written data and information were submitted for consideration. Copies of verbatim transcripts of the public hearings and written materials submitted, totaling more than 9,000 pages, have been made and are available for public use. These verbatim transcripts of the public hearings have been placed in 26 public libraries throughout the region, in the eight TVA offices identified in the January 11, 1979, Federal Register notice, and in the principal offices of the 160 municipal and cooperative distributors of TVA power.

TVA's consideration of, and the determinations to be made concerning, the nine service practice standards are being carried out pursuant to the provisions of PURPA, under which TVA is identified as the regulatory authority for electric utilities over which TVA has ratemaking authority, and the Tennessee Valley Authority Act of 1933, 48 Stat. 58, *as amended*, 16 U.S.C. §§ 831-831dd (1976).

Proposed Determinations

The TVA Board has considered for adoption for itself and the distributors of TVA power nine service practice standards. The Board has determined that its consideration of the standards, and the determinations being made with respect thereto, are in accord with the provisions of the Tennessee Valley Authority Act of 1933 and the Public Utility Regulatory Policies Act of 1978. The first five standards are those set out in PURPA while the remaining four standards, which involve other service practices affecting consumers of TVA power, are being considered by the Board under the provisions of the TVA Act.

The nine standards have been considered in light of the record developed during proceedings on the standards. The Board recognizes the importance of and concurs in the purposes of conservation of electrical energy, efficiency in the use of facilities and resources, and equitable rates as described in PURPA for the five service practices being considered under that act. These purposes were considered in reaching the determination below. The Board also took into account the objectives and requirements of the TVA Act. In making its determinations the Board recognizes the many diverse conditions affecting the distribution of electric power in the region served by TVA. The Board is aware of the wide range of opinions and diversity of views expressed during the hearings.

As demonstrated by the data and information contained in the record, there is a great variety of conditions prevailing in the TVA region that can significantly affect the need for and effect of various service practices. Not only do conditions frequently differ between local distribution systems but there are often significant variations of conditions within individual systems. Among the factors that can cause such variations are number of customers served (TVA distributors range in size from a few hundred customers to a quarter of a million), whether service principally involves rural or urban consumers, differing social and economic conditions, and differences in consumers' usage of electric power depending on the reliance on electricity for heating or cooling and the availability of alternative energy sources.

The determinations of the Board as to the proposed standards reflect the recognition of such varying conditions and the concerns of the individual distributors and their initiative and ability in dealing with these conditions as demonstrated by current service practices. In some instances, it was determined that they were not appropriate or needed. The standards proposed for adoption, to the extent practicable, are general in nature so as to permit local distributor managements to achieve the best match of service and consumer needs consistent with the desired purposes.

TVA is interested in seeing how well the standards adopted work as they are implemented on the systems of individual distributors and how effective they are in carrying out the intended purposes. The Board will continue to actively review service practices in the region. Periodic reviews concerning service practices will be facilitated as data and information are developed.

The Board's determinations follow.

Standard 1—Master Metering

I. Standard Under Consideration

(1) *Master metering.* To the extent determined appropriate, master metering of electric service in the case of new buildings shall be prohibited or restricted to the extent necessary to carry out the purposes of Title I of the Public Utility Regulatory Policies Act of 1978 (Pub. L. 95-617). Separate metering shall be determined appropriate for any new building if

(a) There is more than one unit in such building;

(b) The occupant of each such unit has control over a portion of the electric energy used in such unit; and

(c) With respect to such portion of electric energy used in such unit, the long-run benefits to the electric consumers in such building exceed the costs of purchasing and installing separate meters in such building.

II. Observations

The TVA Board believes that it is important that individual occupants be made to feel a responsibility for electric energy use in the units they occupy. However, information in the record indicates that in the TVA region the standard would not be particularly

effective for achieving such response. One factor is the strong trend that has developed against the use of master metering. Individual metering is normally provided in construction of new multiunit residential buildings. The only significant exception is in the case of public housing. Individual metering is not cost-effective in public housing when individual occupants pay rental charges, which cover utility services, based on the occupants' income rather than the consumption of services.

Part of the provisions of the standards being considered are currently being met through requirements of Energy Conservation Codes for new construction which have recently been adopted by a number of the states in the area served by TVA. A majority of the consumers receiving TVA power are in states covered by these codes. The codes in general require that in all multifamily dwellings, provisions shall be made to determine the energy consumed by each tenant by separately metering individual dwelling units. To the extent that such requirements lead to conservation of energy use, it is already accomplished through the application of the codes.

It is also recognized that there are possibilities for long-run energy-saving benefits to consumers through use of more efficient central equipment, renewable energy sources, and load management schemes. It is clearly not in the consumers' interest to require individual metering which could preclude the use of any such advantageous measures.

While the application of the standard in some cases would probably promote conservation of energy and efficient use of facilities, on balance the adoption of the standard would appear to be of marginal benefit in helping to achieve such purposes from an overall standpoint. With the strong trend toward voluntary application of metering of individual units and the need to retain flexibility to assure that the most cost-effective measures are followed, the standard is not considered necessary or appropriate for the TVA area at this time.

III. Proposed Determination by the TVA Board

Adoption of the standard is not considered necessary or appropriate.

Standard 2—Automatic Adjustment Clauses

I. Standard Under Consideration

(2) *Automatic adjustment clauses.* No rate may be increased pursuant to an automatic adjustment clause unless it meets the following requirements:

(a) Such clause is determined, not less often than every four years, by TVA, after an evidentiary hearing, to provide incentives for efficient use of resources (including incentives for economical purchase and use of fuel and electrical energy), and

(b) Such clause is reviewed not less often than every two years, by TVA, to ensure the maximum economies in those operations and purchases which affect the rates to which such clause applies. In making such review TVA shall examine and, if appropriate, cause to be audited its practices relating to costs subject to an automatic adjustment clause and shall require such reports as may be necessary to carry out such review (including a disclosure of any ownership or corporate relationship between TVA and sellers to it of fuel, electric energy, or other items).

The term "automatic adjustment clause" means a provision of a rate schedule which provides for increases or decreases (or both), without prior hearing, in rates reflecting increases or decreases (or both) in costs incurred by TVA or the distributors of TVA power. Such term does not include an interim rate which takes effect subject to a later determination of the appropriate amount of the rate.

II. Observations

Under the TVA Act, TVA establishes (1) the rates for electricity sold to all of the distributors of TVA power and to all customers served directly by TVA and (2) the resale rates applicable for all electricity sold by the distributors. The use of automatic adjustment clauses as a part of such rates has been discontinued by TVA. Adoption of the standard in the TVA area will not serve to carry out the purposes of PURPA.

III. Proposed Determination by the TVA Board

Adoption of the standard is not considered necessary or appropriate.

Standard 3—Information to Consumers

I. Standard Under Consideration

(3) *Information to consumers.* TVA and the distributors of TVA power shall transmit to each of their electric consumers the following information regarding rate schedules:

(a) A clear and concise explanation of the existing rate schedule and any rate schedule applied for or proposed applicable to such consumer. Such statement shall be transmitted to each such consumer

(i) Not later than 60 days after the date of commencement of service to such consumer or 90 days after this standard is adopted, whichever last occurs and

(ii) Not later than 30 days (60 days in the case of a bimonthly billing system) after application for or proposal of any change in a rate schedule applicable to such consumer.

(b) Each electric consumer shall be given not less frequently than once each year

(i) A clear and concise summary of the existing rate schedules applicable to each of the major classes of electric consumers for which there is a separate rate and

(ii) An identification of any classes whose rates are not summarized.

Such summary may be transmitted together with such consumer's billing or in such other manner as TVA or the distributor deems appropriate.

(c) On request an electric consumer shall be given a clear and concise statement of the actual consumption (or degree-day adjusted consumption) of electric energy by such consumer for each billing period during the prior year (unless such consumption data is not reasonably ascertainable).

II. Observations

In a period of higher cost energy and public awareness, it is important that distributors take reasonable, positive actions to inform customers about such important matters as rates and service practice policies. Informed customers are better able to respond to changes in rates and act in their own interest and in the interest of all customers. A body of informed customers is clearly a desirable goal in the face of the long-run rise in energy costs and the obvious possibility of energy shortages. Distributors are demonstrating an increasing awareness of the need to see that such information is available to consumers and the importance of furnishing it in the most cost-effective manner.

The availability of information about rates, consumption, and service practice policies, is considered to be effective in helping customers achieve conservation of energy, the efficient use of facilities and resources, and equity among consumers. However, it is important from the customers' standpoint that such benefits be achieved as economically as possible. As indicated throughout the record, the mandatory requirements for transmitting information to each customer would result in little if any additional benefits while creating considerable additional cost. Based on

information and data in the record, such provisions for the mandatory transmittal of information to all customers are not considered effective for achieving the purposes set out in PURPA and are not considered appropriate for adoption in the TVA area.

It is essential that the most effective means be used to provide information to consumers that will encourage conservation of energy. TVA expects to work closely with distributors in using present means, as well as developing more effective methods, of reaching consumers with information that will achieve such purposes.

III. Proposed Determination by the TVA Board

The standard under consideration is revised and adopted as follows:

Information to Consumers

Distributors shall reasonably inform customers about rates and service practice policies by making such information available upon application for service and at any other time upon request.

Distributor, on request, shall provide a statement of the monthly consumption for the prior 12 months if it is reasonably ascertainable.

Distributor, as it determines appropriate, shall utilize channels such as mail, newspaper, radio, and television to inform customers about rates and service policies.

* * * * *

Each distributor shall, upon notice and opportunity for comment, develop and file with TVA within 60 days of the effective date of this standard an information service policy, which takes into account the considerations set out above, consistent with local circumstances.

Standard 4—Procedures for Termination of Electric Service

I. Standard Under Consideration

(4) *Procedures for termination of electric service.* Electric service to any electric consumer may not be terminated except pursuant to procedures which provide that

(a) Reasonable prior notice (including notice of rights and remedies) is given to such consumer and such consumer has a reasonable opportunity to dispute the reasons for such termination and

(b) During any period when termination of service to an electric consumer would be especially dangerous to health, as determined by TVA, and such consumer establishes that

(i) He is unable to pay for such service in accordance with the requirements of the billing or

(ii) He is able to pay for such service but only in installments.

such service may not be terminated.

Such procedures shall take into account the need to include reasonable provisions for elderly and handicapped consumers.

II. Observations

The importance of electricity to the well-being and health of individual consumers in the region in which TVA power is made available is widely understood. Termination of service for any reason is considered a matter of serious concern by TVA, distributors, and customers.

The varying circumstances and conditions affecting individual distributor systems, as evidenced by the record, demonstrate the need for each system to have flexibility in developing procedures appropriate for that system for terminating service. However, distributors are expected in all circumstances to satisfy due process and other legal requirements in terminating service to customers. Procedures must provide adequate notice and opportunity for consideration of disputed bills.

Considerations referred to in the above standard shall be taken into account by individual distributors in developing service policies for termination of service. In addition, the following considerations should be taken into account:

(1) In establishing the amount of time that it considers to be reasonable notice, each distributor should recognize the delays that frequently are now incurred in receiving mailings as well as the difficulties of taking immediate steps to avoid termination because of the work schedules of the customers or where elderly individuals or illness is involved.

(2) Notification on the customer's bill is not considered adequate for satisfying the requirement for a reasonable prior written notice under the standard being adopted.

(3) Distributors also are expected to consider the desirability of establishing as part of termination procedures efforts to actually contact customers prior to termination. Inasmuch as some customers are unable for health or other reasons to cope with the threat of termination, distributors are encouraged to include provisions permitting third party notifications.

Programs at the Federal and state levels are available to help provide funds and other assistance in customer hardship situations. TVA will be working with distributors in placing greater emphasis on such programs, in helping to see that they are available for customers' use, and seeing that customers have knowledge of the availability.

III. Proposed Determination by the TVA Board

The standard under consideration is revised and adopted as follows:

Procedures for Termination of Electric Service

Service may not be terminated for nonpayment of a bill except after affording the affected customer due process including reasonable prior written notice (including notice of rights and remedies).

* * * * *

Each distributor shall, upon notice and opportunity for comment, develop and file with TVA within 60 days of the adoption of this standard a termination of service policy, which takes into account the considerations set out above, consistent with local circumstances.

Standard 5—Advertising

I. Standard Under Consideration

(5) *Advertising.* Neither TVA nor the distributors of TVA power may recover from any person other than their shareholders (or other owners) any direct or indirect expenditure for promotional or political advertising.

(a) The term "advertising" means the commercial use of any media, including newspaper, printed matter, radio, and television, in order to transmit a message to a substantial number of members of the public or to electric consumers.

(b) The term "political advertising" means any advertising for the purpose of influencing public opinion with respect to legislative, administrative, or electoral matters, or with respect to any controversial issue of public importance.

(c) The term "promotional advertising" means any advertising for the purpose of encouraging any person to select or use electric service or additional electric service or the selection or installation of any applicance or equipment designed to use electric service.

(d) The terms "political advertising" and "promotional advertising" do not include

(i) Advertising which informs electric consumers how they can conserve energy or can reduce peak demand for electric energy;

(ii) Advertising required by law or regulation, including advertising required under part 1 of Title II of the National Energy Conservation Policy Act;

(iii) Advertising regarding service interruptions, safety measures, or emergency conditions;

(iv) Advertising concerning employment opportunities;

(v) Advertising which promotes the use of energy efficient appliances, equipment, or services; or

(vi) Any explanation or justification of existing or proposed rate schedules or notifications of hearings thereon.

II. Observations

Advertising by TVA and the distributors of TVA power is presently used to encourage and emphasize the need for conservation through efficient use of electricity, and is not now used to increase sales. TVA does not engage in political advertising and provisions of the wholesale power contracts specifying the purposes for which revenues from the sale of power can be spent prevent the distributors from engaging in political advertising. The standard would not appear to further the purposes of PURPA with respect to TVA or the distributors and is not considered necessary or appropriate for adoption.

III. Proposed Determination by the TVA Board

Adoption of the standard is not considered necessary or appropriate.

Standard 6—Deposit

I. Standard Under Consideration

(6) *Deposit.* A deposit or suitable guarantee approximately equal to twice the average monthly bill may be required of any Customer before electric service is supplied. Distributor may at its option return deposit to Customer after one year. Upon termination of service, deposit may be applied by Distributor against unpaid bills of customer, and if any balance remains after such application is made, said balance shall be refunded to Customer.

II. Observations

The Board is aware of the role of security deposits in helping reduce bad debt losses, and thereby protecting the mass of customers who pay their bills from unfairly having to cover for those who do not. Information in the record clearly demonstrates that circumstances and conditions affecting individual distributors vary significantly and that it is desirable and appropriate for each distributor to have some flexibility in establishing practices reflecting its own circumstances and needs. Data included in the record shows the logic of permitting distributors to require deposits of customers up to the equivalent of twice the average monthly bill, especially those with poor credit ratings.

The record also shows that there may be applicants who need service but are unable to pay the entire deposit prior to service. Provision for installment payments in such cases is a proper matter to be considered by distributors in developing a service policy on the standard adopted. Deposits collected on the basis of race, color, creed, sex, national origin, or marital status are inappropriate.

Security deposits retained for long periods without interest payments in a number of instances are used to meet a part of the distributor's capital requirements and thus deprive the customer of the use of his money without direct compensation. It appears reasonable that deposits should be refunded after a customer demonstrates a good payment record of no more than a year and that reasonable interest should be paid on deposits retained longer than six months.

III. Proposed Determination by the TVA Board

The standard under consideration is revised and adopted.

Deposit. A reasonable deposit may be required of any Customer. In cases of hardship of residential customers, distributor may accept installment payment of deposits. Deposits held for more than six months should be returned with interest after a good payment record.

* * * * *

Each distributor shall, upon notice and opportunity for comments, develop and file with TVA within 60 days of the adoption of this standard a deposit policy, which takes into account considerations set out above, consistent with local circumstances.

Standard 7—Connection, Reconnection, and Disconnection Charges

I. Standard Under Consideration

(7) *Connection, reconnection, and disconnection charges.* Distributor may establish and collect standard charges to cover the reasonable average cost, including administration, of connecting or reconnecting service, or disconnecting service as provided above. Higher charges may be established and collected when connections and reconnections are performed after normal office hours or when special circumstances warrant.

II. Observations

The record indicates that there are relatively few problems with connection, reconnection, and disconnection charges as they are being applied by distributors. The record indicates that some individuals have difficulties in paying such charges. The Board believes that individual distributors can help alleviate the difficulties of this small number of persons without adopting a mandatory standard containing such requirements. The Board further recognizes that, as shown in the record, because of a diversity of conditions prevailing throughout the Tennessee Valley area and from system to system, individual distributors are in the best position to establish the charges, if any, which are appropriate.

III. Proposed Determination by the TVA Board

Adoption of a new standard is not considered necessary.

Standard 8—Billing

I. Standard Under Consideration

(8) *Billing.* Bills will be rendered monthly and shall be paid at the office of Distributor or at other locations designated by Distributor. Failure to receive bill will not release Customer from payment obligation. Should bills not be paid by due date specified on bill, Distributor may at any time thereafter, upon five (5) days' written notice to Customer, discontinue service. Bills paid after due date specified on bill may be subject to additional charges. Should the due date of bill fall on a Sunday or holiday, the business day next following the due date will be held as a day of grace for delivery of payment. Remitances received by mail after the due date will not be subject to such additional charges if the incoming envelope bears United States Postal Service date stamp of the due date or any date prior thereto.

Distributor shall designate in its standard policy a period of not less than 10 days nor more than 20 days after date of the bill during which period the bill is payable as computed by application of the charges for service under the appropriate resale schedule and shall further designate in said policy the percentage or percentages, if any, not to exceed 10 percent of the bill, computed as above provided, which will be added to the bill as additional charges for payment after the period so designated.

II. Observations

Data and information in the record show that timely receipt of revenues is needed by distributors to meet expenses and to avoid incurring additional costs. At the same time as electric rates continue to increase, many customers,

particularly those with low or fixed income, are having more difficulty making timely payments of power bills.

The record indicates that distributors are sensitive to the need to reach an appropriate balance between these two compelling factors. In this regard, distributors are tending toward lengthening the net payment period (from previous limits of 10 days), and to reducing the late payment charge (from previous levels of 10 percent). The offering by many distributors of special counseling in hardship cases (referral to public assistance agencies, installment payments, etc.) is proving effective in helping customers deal with payment problems.

While it is considered appropriate to adopt a standard containing certain limits, it is recognized, as shown in the record, that distributors need the flexibility to reflect individual system conditions in establishing billing policies. Considerable data and information as to an appropriate period for net payment of residential bills was included in the record. After consideration of this and in light of existing circumstances, it appears appropriate that the standard provide a net payment period of at least 21 days. Although some have suggested substantially longer periods to pay, it seems likely that this would tend to cause some customers to only accumulate larger amounts in arrears making eventual payment even more difficult.

The use of late payment charges as high as 10 percent applied to today's higher bills may produce more revenue than the costs associated with late payments. Conclusions drawn from the record indicate that a late payment charge in the order of 5 percent would be an adequate upper limit to cover the additional distributor costs imposed by late payments and, at the same time, encourage customers to pay before the due date. It is recognized that late payment charges of up to 5 percent are not needed in many cases and distributors, where possible, are encouraged to limit such charges to 1½ percent per month.

As indicated by the record, budget billing can be a helpful device for lessening the impact of higher seasonal bills of residential customers. While it is recognized that budget billing may not be readily adaptable for customers who change location often, distributors are strongly encouraged to include the availability of budget billing within the service policy provisions covering billing.

III. Proposed Determination by the TVA Board

The standard is revised and adopted.

Billing. Distributor shall designate a standard net payment period for residential customers of not less than 21 days after the date of the bill and may establish a late payment charge of no more than 5 percent for any portion of bill paid after net payment period.

* * * * *

Each distributor shall, upon notice and opportunity for comment, develop and file with TVA within 60 days of the adoption of this standard a service policy, which takes into account the considerations set out above, consistent with local circumstances.

Standard 9—Building Standards

I. Standard Under Consideration

(9) *Building standards.* New buildings, including homes, must meet energy conservation weatherization standards developed by TVA as a requirment for electric service.

II. Observations

The record indicates that most people are concerned about the high cost of energy and agree with the concept of energy-efficient homes and buildings but that it is difficult for consumers to discriminate between those homes which are in fact energy efficient and those which are not. Many of those testifying, including individuals and construction-related organizations, felt that traditional code making and governmental enforcement bodies should be relied upon to develop and enforce conservation standards for new buildings and that such a role was inappropriate for TVA. However, testimony was received from Federal and state agencies indicating that adoption or development and/or enforcement of conservation standards may not be forthcoming from the various legislative or regulatory bodies. In the absence of legislative action, they encouraged TVA to develop and enforce conservation standards and related programs for new buildings.

Existing codes and those under development, if adopted by the states, and stringently enforced, would greatly improve the energy efficiency of new commercial and industrial buildings. However, as indicated in the record, existing codes being adopted by the states for new homes are only minimally better than current practice. The potential exists for considerable conservation improvement in the residential sector, but lack of reliable information about the efficiency of new homes is a barrier which needs to be breached if these savings are to be fully captured.

Many participants expressed concern that increased housing costs due to conservation might squeeze potential home buyers out of the market. The record also reveals a lack of knowledge by consumers that energy savings quickly repay the cost of conservation investments and then the consumer will save money each year thereafter. Builders also indicated that lending institutions do not generally give credit for conservation measures in loan qualification procedures or appraisals. New home buyers generally are not able to estimate accurately and compare the utility costs between efficient and wasteful and are thus unable to trade off the increased first cost of energy efficiency against decreased operating costs when making purchasing decisions.

These factors support the conclusion that builders have insufficient incentive to build highly efficient homes along the lines of the TVA Super Saver. The record does show that most people would support a voluntary program designed both to upgrade the thermal characteristics of new homes and to provide trustworthy information about the energy efficiency of new construction.

While it is clear that adoption of mandatory standards by TVA would be a cost-effective way to promote energy efficiency in new buildings, the TVA Board recognizes that considerable effort is now underway by other Government agencies in developing and enforcing building standards. TVA will actively encourage the responsible state and local Governments to develop and adopt more than minimal codes and to enforce them strictly. In addition, a vouluntary residential sector program, emphasizing education, energy efficiency labeling, and technical assistance, will be established and monitored for effectiveness to encourage the construction and purchase of highly efficient homes. Financial incentives for energy-efficient construction may also be considered, but such consideration should more appropriately be taken up as part of proceedings dealing with section 111 of PURPA.

In lieu of adopting a mandatory standard, TVA will take the following steps to improve energy efficiency of new buildings. TVA will:

(1) Aid and encourage the Federal, state, and local Governments to develop, adopt, and enforce building standards that optimize reduced utility costs with increased building costs to

produce the lowest total cost to the consumer.

(2) Establish a residential program using education and technical assistance for consumers, builders, lending institutions, and realtors to encourage the construction of energy-efficient homes equivalent to:

Twenty-five percent all new homes built to TVA's $uper $aver specifications during the first year;

Forty percent of all new homes built to TVA's $uper $aver specifications during the second year;

Sixty-five percent of all new homes built to TVA's $uper $aver specifications during the third year.

(3) Inspect new homes and provide certification and labeling of those inspected homes that meet the energy efficiency equivalent of TVA's $uper $aver standard. A TVA-approved "Energy Saving Home" seal of approval would be available for display. This will better enable those in the home-buying market to choose the most efficient homes, as well as providing an additional market-related stimulus to meet the goals cited above.

In the event that this overall approach does not produce the desired improvements in the energy efficiency of new buildings, adoption of mandatory standards by TVA will be reconsidered.

III. Proposed Determination by the TVA Board

Adoption of the standard is not considered appropriate.

Dated: June 29, 1979.

William F. Willis,

General Manager.

[FR Doc. 79-20868 Filed 7-5-79; 8:45 am]

BILLING CODE 8120-01-M

DEPARTMENT OF THE TREASURY

Customs Service

[521118]

American Manufacturer's Petition; Notice of Receipt Requesting That Antidumping Duties Be Assessed on Tapered Roller Bearings and Components From Japan, Pursuant to a 1976 Finding of Dumping With Respect to Such Merchandise

AGENCY: U.S. Customs Service, Department of the Treasury.

ACTION: Notice of receipt of American manufacturer's petition.

SUMMARY: Customs has received a petition from an American manufacturer of tapered roller bearings and components requesting that, pursuant to a 1976 finding of dumping made with respect to tapered roller bearings and components from Japan, antidumpting duties be assessed.

DATE: Interested persons may comment on this petition. Comments (preferably in triplicate) must be received on or before August 6, 1979.

ADDRESS: Comments should be addressed to the Commissioner of Customs, Attention: Regulations and Legal Publications Division, Room 2335, 1301 Constitution Avenue, N.W., Washington, D.C. 20229.

FOR FURTHER INFORMATION CONTACT: Jesse V. Vitello, Classification and Value Division, U.S. Customs Service, 1301 Constitution Avenue, N.W., Washington D.C. 20229 (202-566-8410).

SUPPLEMENTARY INFORMATION:

Background

A petition has been filed under section 516 of the Tariff Act of 1930, as amended (19 U.S.C. 1516), by an American manufacturer of tapered roller bearings and components. The petitioner alleges that, notwithstanding a finding of dumping made by the Secretary of the Treasury with respect to tapered roller bearings and components from Japan (T.D. 76-227, 41 FR 34974 (August 18, 1976)), antidumping duties have not been assessed against such merchandise manufactured and exported from Japan since July 3, 1973, by Koyo Seiko Co., Ltd., Nippon Seiko, K.K., Fujikoshi, Ltd., and The Toyo Bearing Mfg. Co., Ltd. The petitioner requests that the Secretary of the Treasury determine that such duties should be assessed.

It is pertinent to note that some dumping duties have been assessed against the subject merchandise. It is anticipated that additional assessments will be made in the near future.

Comments

Pursuant to section 175.21(a) of the Customs Regulations (19 CFR 175.21(a)), the Customs Service invites written comments on this petition from all interested parties.

The American manufacturer's petition, as well as all comments received in response to this notice, will be available for public inspection in accordance with sections 103.8(b) and 175.21(b), Customs Regulations (19 CFR 103.8(b), 175.21(b)), during regular business hours at the Regulations and Legal Publications Division, Headquarters, U.S. Customs Service, Room 2335, 1301 Constitution Avenue, N.W., Washington, D.C. 20229.

Authority

This notice is published in accordance with § 175.21(a) of the Customs Regulations (19 CFR 175.21(a)).

Donald W. Lewis,

Acting Commissioner of Customs.

Approved: June 28, 1979.

Robert H. Mundheim,

General Counsel.

[FR Doc. 79-20928 Filed 7-5-79; 8:45 am]

BILLING CODE 4810-22-M

Office of the Secretary

Draft Procedures for Implementation of the NEPA Regulations

AGENCY: Department of the Treasury.

ACTION: Notice of availability for public review and comment of draft Treasury procedures to supplement the Council on Environmental Quality's (CEQ) Regulations (40 CFR Parts 1500-1508) for implementing the procedural provisions of the National Environmental Policy Act (NEPA).

SUMMARY: These draft procedures, in the form of a proposed Treasury directive, are published for public review and comment as required by § 1507.3(a) of the CEQ Regulations. Although Treasury internal directives are not normally made available for public review and comment, and this proposed directive has not as yet received final approval, all Treasury bureaus and offices will be expected to comply with it effective July 30, 1979, even though it is subject to change as a result of public comment. Subsequent to review and comment, final procedures will be filed with CEQ, published in the Federal Register, and made readily available to the public. Since the final procedures will be issued as an internal directive in the Department of the Treasury Directives Manual, the criteria and procedures established by Treasury to implement Executive Order 12044, "Improving Government Regulations", are not applicable.

Authority: 40 CFR 1507.3

COMMENT DATE: Written comments must be received on or before August 6, 1979.

ADDRESS: Comments should be mailed or delivered to: the Assistant Secretary (Administration), Room 3442, Main Treasury, Department of the Treasury, Washington, D.C. 20220, Attention: NEPA.

FOR FURTHER INFORMATION CONTACT: Mr. Anthony V. DiSilvestre or Ms. Andrea Casement at 202-376-0289.

Subject—Department of the Treasury Environmental Quality Program

1. *Purpose.* This directive establishes policy, standards, and procedures for supplementing and implementing the Council on Environmental Quality Regulations (hereafter the CEQ Regulations) on the National Environmental Policy Act (NEPA).

2. *Scope.* This directive applies to the Office of the Secretary and all bureaus.

3. *Authority and References.*

a. National Environmental Policy Act of 1969, as amended, (42 U.S.C. 4321 et seq.).

b. Executive Order 11514, "Protection and Enhancement of Environmental Quality", March 5, 1970, as amended by Executive Order 11991, May 24, 1977.

c. Council on Environmental Quality, "National Environmental Policy Act Regulations", 40 CFR Parts 1500–1508, (43 FR 55978), November 29, 1978.

d. Section 309 of the Clean Air Act, as amended (42 U.S.C. 7609).

e. Executive Order 11988, "Floodplain Management", May 24, 1977.

f. Executive Order 11990, "Protection of Wetlands", May 24, 1977.

g. Water Resources Council, "Floodplain Management Guidelines" (43 FR 6030), February 10, 1978.

4. *Cancellation.* "Department of the Treasury Procedures for Preparation and Coordination of Environmental Impact Statements", (39 FR 14796), May 1, 1974.

5. *Effective date.* The provisions of this directive are effective as of July 30, 1979.

6. *Policy.* It is recognized that some major actions of the Department may have a significant impact on the human environment, and it is the policy of the Department to fully evaluate its actions, as necessary, in accordance with the requirements of the CEQ Regulations and NEPA.

7. *Responsibilities.* a. *Assistant Secretary (Administration),* is hereby designated as the Departmental Environmental Quality Officer (EQO), and the liaison official for the Department with the Council on Environmental Quality (CEQ), the Environmental Protection Agency (EPA), and other departments and agencies concerning environmental matters, and is responsible for:

(1) Insuring that the actions of Treasury offices and bureaus (hereafter referred to as "bureaus"), with respect to the fulfillment of NEPA and the CEQ Regulations, are duly coordinated;

(2) Providing guidance to bureaus on environmental policy and requirements;

(3) Assisting bureaus in reviewing and assessing the environmental impact of proposed Treasury actions;

(4) Providing guidance in the preparation, scoping, processing, and distribution of environmental assessments and environmental impact statements (EISs);

(5) Receiving for clearance action all environmental assessments and impact statements, draft and final, originating in the Department;

(6) Receiving all environmental assessments and impact statements submitted by other agencies to the Department and coordinating the appropriate review and reply; and

(7) Performing such other functions as are specified in this directive or are appropriate under the CEQ Regulations or other instructions or recommendations of CEQ, the Water Resources Council, and EPA concerning environmental matters.

b. *Assistant Director (Environmental Programs), Office of Administrative Programs, (AAE)* under the general supervision of the Director of Administrative Programs, shall provide staff support to the Assistant Secretary (Administration) in carrying out all the above mentioned duties.

c. *Assistant Secretaries and Heads of Bureaus* are responsible for:

(1) The preparation, consideration, and appropriate circulation of environmental assessments and impact statements when an action or policy area in question falls under their jurisdiction;

(2) The issuance of any supplementary procedures consistent with this directive for the implementation of NEPA which the bureau deems necessary. Any such procedures issued after July 30, 1979 shall be submitted for review and concurrence by the Departmental EQO, and any procedures in existence at such date shall, with similar review and concurrence, be revised in accordance with the CEQ Regulations and this directive. Such procedures shall be published in the bureau directive system.

(3) Assuring that communications with CEQ, EPA, and other governmental agencies or individuals, on environmental matters, are signed by or coordinated with the Departmental EQO. Examples of such communications are letters transmitting EISs, reports, and all Departmental contacts with the above mentioned. Unless special circumstances indicate that a different officer should act, communications announcing decisions to prepare EISs or assessments, requesting comments on draft statements, or transmitting final statements for the information of agencies or persons commenting on draft statements, shall also be signed by the Departmental EQO and, in the case of a Federal agency, shall be addressed to its Departmental EQO or equivalent official;

(4) Performing such other function as specified in this directive.

d. *Heads of Bureaus* are responsible for designating a Bureau Environmental Quality Officer (BEQO), and alternate.

e. *Bureau Environmental Quality Officers (BEQOs) are responsible for:*

(1) Identifying bureau actions requiring an environmental assessment or impact statement;

(2) Making sure that each required assessment or statement is prepared timely and with the prescribed content by appropriate bureau staff;

(3) Ensuring the bureau's compliance with the requirements of NEPA, the CEQ Regulations, and this directive, in particular, by coordinating the review within the bureau of such statements and assessments; and by maintaining compliance with all applicable scheduling, scoping, consultation, circulation, public hearing, and publicity requirements.

(4) Maintaining effective communication and consultation with the Departmental EQO and keeping key officials in the bureau informed of current developments in environmental policy and programs.

f. The Departmental EQO, and at the EQO's request, the respective bureaus, shall be responsive to requests from the CEQ and EPA for reports or other information in connection with the implementation of NEPA and for the preparation and circulation of EISs as required by Section 1506.9 of the CEQ Regulations.

g. The assessment of the environmental impact of actions concerning various areas of Treasury policy and operations specified below and the preparations of environmental impact statements relating thereto shall be coordinated in consultation with the Departmental EQO, and the officer having primary responsibility as follows:

Action area	Officer with coordinating responsibility
Administration of facilities, physical operations, procurement, contracts, leases, etc.	Assistant Secretary (Administration).
Tax policy recommendations and legislation.	Assistant Secretary (Tax Policy).
Nontax legislative recommendations and reports.	General Counsel.
International environmental matters.	Assistant Secretary (International Affairs).

Action area	Officer with coordinating responsibility
Energy and natural resource matters.	Assistant Secretary (Economic Policy).

8. *Background.* The National Environmental Policy Act (NEPA) of 1969 establishes national policies and goals for the protection of the environment. Section 102(2) of NEPA contains requirements directed toward the attainment of such goals. On November 29, 1978 CEQ issued new regulations implementing the procedural provisions of NEPA. The regulations are binding on all federal agencies and require that, effective July 30, 1979, each agency adopt implementing procedures to supplement the CEQ Regulations.

9. *Terminology.* Part 1508 of the CEQ Regulations requires that the terminology contained therein shall be uniform throughout the Federal Government. Therefore the terminology in Part 1508 shall be employed for purposes of this directive.

10. *The NEPA Process.* a. *Ensure the NEPA Process is Integrated With Bureau Planning and Decisionmaking.* (1) The ultimate purpose of NEPA is to ensure that public officials make decisions based on an understanding of the environmental consequences of proposed Federal actions. The means provided by NEPA to achieve its goal is called the "NEPA process" and is outlined in Section 102(2) of NEPA.

(2) To comply with NEPA, bureaus must ensure that the NEPA process is integrated with bureau planning and decisionmaking as early as possible (§ 1501.1 CEQ Regulations). Accordingly, bureaus shall:

(a) Make sure that final environmental impact statements or assessments and related documents accompany proposals through the entire review process.

(b) Consider and balance pertinent non-environmental factors with those relating to the environment, and consider all practicable alternatives and mitigation measures identified in the environmental documents.

(c) Make no decision on the proposed action until the timing requirements outlined in paragraph 12c(1) of this directive have been met.

(d) Prepare a concise public record of the decision at the time it is made or, for a legislative EIS, at the time of its recommendation to Congress. This record will be prepared in accordance with § 1505.2 of the CEQ Regulations.

b. *Early Involvement of the Bureaus in Actions Initiated by Non-Federal Entities.* (1) Section 1501.2(d) of the CEQ Regulations requires agencies to provide for early involvement in actions which, while planned by private applicants or other non-Federal entities, require some form of Federal approval.

(2) To implement the requirements of § 1501.2(d) with respect to these kinds of actions (for example, permits or approvals in connection with national banks or wineries) each bureau shall:

(a) Prepare where practicable generic guidelines describing the scope and level of environmental information required from applicants as a basis for evaluating their proposed actions and make these guidelines available.

(b) Provide such guidance on a project-by-project basis to applicants seeking assistance from the bureau.

(c) Upon receipt of an application for bureau approval, or notification that an application will be filed, consult as required with other appropriate parties to initiate and coordinate the necessary environmental analyses.

(3) The bureau shall independently evaluate the information submitted by the applicant and shall be responsible for its accuracy. If the bureau chooses to use the information submitted by the applicant in the environmental assessment or impact statement, it must include the names of the persons responsible for the independent evaluation in a list of preparers (§ 1506.5(a), CEQ Regulations).

(4) To facilitate compliance with the requirements above, private applicants and other non-Federal entities should be advised to:

(a) Contact the bureau as early as possible in the planning process for guidance on the scope and level of environmental information required to be submitted in support of their application;

(b) Conduct any studies which are deemed necessary and appropriate by the bureau to determine the impact of the proposed action on the human environment;

(c) Consult with appropriate Federal, regional, State and local agencies and other potentially interested parties during preliminary planning stages to ensure that all environmental factors are identified;

(d) Submit applications for all Federal, regional, State and local approvals as early as possible in the planning process;

(e) Notify the bureau as early as possible of all other Federal, regional, State, local and Indian tribe actions required for project completion so that the bureau may coordinate all Federal environmental reviews; and

(f) Notify the bureau of all known parties potentially affected by or interested in the proposed action.

c. *Identification of Typical Classes of Action Requiring Similar Treatment Under NEPA.* (1) Actions undertaken by the Department may be broken down into three main classes of action:

(a) Those actions normally requiring environmental impact statements;

(b) Those actions normally requiring environmental assessments but not necessarily environmental impact statements; and

(c) Those actions which require neither an environmental impact statement nor an environmental assessment (i.e., "categorical exclusion").

(2) The Department of the Treasury does not, in general, have responsibility for actions which will normally have a significant effect on the quality of the human environment and, therefore, it is difficult to establish detailed criteria for determining what proposed actions within the Department may require an environmental assessment or impact statement. Decisions as to whether environmental documentation is required shall be made on a case-by-case basis by the head of the bureau involved in conjunction with the BEQO and the Departmental EQO. The following are examples of bureau actions which fall within one of the classes of actions listed in subparagraph (1) above, and which might be used as an indication of the treatment which may be given to similar actions in the future.

(a) Bureau actions which would normally require environmental impact statements include proposals for approval of plastic liquor bottles by the Bureau of Alcohol, Tobacco and Firearms; proposals for major Treasury building projects involving land acquisition and construction of new facilities; or proposed major tax expenditure legislation by the Office of Tax Policy which may have a significant effect on the environment.

(b) Bureau actions which would normally require environmental assessments but not necessarily environmental impact statements include proposals to build new border stations by the Customs Service; permits by the Office of the Comptroller of the Currency for the establishment or relocation of a national bank; or significant changes in the Federal Law Enforcement Training Center's training program.

(c) Bureau actions which are categorically excluded include funding assistance solely in the form of general

revenue sharing funds, distributed under the State and Local Fiscal Assistance Act of 1972 (31 U.S.C. 1221 et seq.) with no Federal control over the subsequent use of such funds; and Internal Revenue Service functions in the administration of the Internal Revenue Code, such as regulations interpreting, implementing, or clarifying code provisions, revenue and letter rulings and memorandums, revenue procedures, and forms and publications to assure proper record retention, reporting, and payment of tax as due.

(3) In the event a proposed bureau action falls within either category (a) or (b) of subparagraph (1) above, the bureau should take the appropriate actions outlined in this directive in paragraphs 11 and 12 following. If the proposed action is "categorically excluded" then the bureau need not address the environmental effects of the action before implementing the action.

11. *Environmental Assessments.* a. NEPA requires that, for all proposals for legislation or other major Federal actions significantly affecting the quality of the human environment, the environmental implications of the proposal are to be explored.

b. Whenever it appears that a bureau matter, including the continuance of any action or program already initiated, constitutes a major action significantly affecting the quality of the human environment, whether beneficially or adversely, an environmental assessment shall be prepared as soon as possible, and at all times prior to the decision to take or to continue the action. Consistent with the views of the Departmental EQO, the head of bureau, or any officer specifically designated by the bureau head for the purpose, shall prepare the assessment. The Bureau EQO shall participate as appropriate in this preparation. The assessment shall be submitted to the Departmental EQO for review and approval.

c. The scoping process outlined in Section 1501.7 of the CEQ Regulations, shall be used for determining the scope of issues to be addressed and for identifying the significant issues related to the proposed action. The bureau involved and the Departmental EQO shall be responsible for carrying out the scoping process in accordance with the CEQ Regulations.

d. To the extent practicable, other agencies, applicants, and the public should be involved in preparing the assessment. Bureau responsibility for information provided by applicants for use in preparing an environmental assessment or for assessments prepared by an applicant for a bureau is outlined in § 1506.5(b) of the CEQ Regulations.

e. In accordance with § 1508.9 of the CEQ Regulations the environmental assessment shall:

(1) Describe the proposed action and the need for it;

(2) Briefly describe the environmental impacts of, and alternatives to, the proposed action, including mitigation measures;

(3) List the agencies and persons consulted; and

(4) Provide a brief analysis, based upon the above evidence, for determining whether to prepare an environmental impact statement or a finding of no significant impact.

f. The bureau shall make environmental assessments and findings of no significant impact available to the public as specified in paragraph 15b of this directive.

g. An environmental assessment need not be prepared if a bureau has decided to prepare an environmental impact statement on a proposed action.

12. *Environmental Impact Statements.* a. Once it is determined that a bureau shall be responsible for preparing an environmental impact statement, the decision to prepare the EIS shall be promptly announced in the Federal Register. The Departmental EQO will provide the BEQO with a sample of such an announcement and information on the procedures to be followed.

b. Section 1501.5(a) of the CEQ Regulations provides that a lead agency shall supervise the preparation of an environmental impact statement if more than one Federal agency either proposes or is involved in the same action, or is involved in a group of actions directly related to each other because of their functional interdependence or geographical proximity. In the event the preparation of an EIS for a proposed bureau action requires the designation of a lead agency for either of these reasons, the head of the bureau shall contact the Departmental EQO for guidance. Any communications with other agencies which deal with lead agency designation shall be coordinated with the Departmental EQO. The criteria for, and responsibilities of lead agencies and cooperating agencies are outlined in §§ 1501.5 and 1501.6 of the CEQ Regulations, respectively.

c. Impact statements shall first be issued in draft, for comment by government agencies and the public as appropriate. Final impact statements responsive to comments received shall then be issued. The requirements for the preparation and circulation of draft and final statements (Part 1502 of the CEQ Regulations) are as follows:

(1) *Timing:* (a) The timing of the preparation, circulation, submission, and public availability of environmental impact statements is of great importance. Impact statements are not intended to justification documents for proposed actions but are to be objective evaluations of proposed actions and their alternatives in light of all reasonably pertinent environmental considerations (Section 1502.2(g), CEQ Regulations). Therefore, the preparation of an EIS shall be undertaken as early as possible in the bureau's process of considering the proposed action.

(b) Environmental impact statements are then filed with EPA. EPA, in turn, publishes a weekly notice in the Federal Register of the EISs filed during the preceding week. No decisions on the proposed action may be made by the bureau until the following time periods, calculated from the publication date of the EPA notice, have been observed:

1. Not less than 45 days for comment on draft statements (§ 1506.10(c), CEQ Regulations).

2. Not less than 90 days and 30 days, respectively, for public availability of draft and final statements prior to administrative actions. These periods may run concurrently (§ 1506.10 (b) and (c), CEQ Regulations).

3. Not less than 15 days for public availability of draft statements prior to any relevant hearing on proposed administrative actions (§ 1506.6(c)(2), CEQ Regulations).

4. The time periods prescribed in *1* through *3* above may be extended or reduced, in specific instances, in accordance with §§ 1506.10(b)(2) and 1506.10(d) of the CEQ Regulations.

(2) *Securing Information:* (a) The full resources of the Department should be utilized in developing the factual and analytic information and reference sources required in the preparation of an environmental impact statement. Further, in the great majority of instances, the assistance of other agencies, Federal, State or local, with jurisdiction by law or special expertise concerning the environmental impacts involved should be sought.

(b) If BEQOs have difficulties in securing requisite information or need guidance in making the necessary analysis, they should consult the Departmental EQO, who will assist in locating needed information through appropriate staff members of the CEQ, EPA, or other pertinent sources.

(3) *Writing and Content:* (a) Environmental impact statements are to be written in plain language, and may

include appropriate graphics, so that bureau decisionmakers and the public can readily understand them (§ 1502.8, CEO Regulations).

(b) The "scoping" process as discussed in paragraph 11c of this directive shall be utilized so that only the significant issues related to the proposed action are analyzed in depth.

(c) Environmental impact statements should be kept as concise as possible while still providing adequate, meaningful, and factual information and analysis to permit an evaluation of the proposed action from the environmental standpoint. Their length shall normally be less than 150 pages, and for proposals of unusual scope or complexity, less than 300 pages (§ 1502.7, CEQ Regulations). "Tiering" (§ 1502.20, CEQ Regulations) and "incorporation by reference" (§ 1502.21, CEQ Regulations) should be used, where appropriate, to insure that statements are kept concise.

(d) Quantitative information about the proposed action, including actual or estimated data on its probable effects, should be included to the greatest extent practicable. If a cost-benefit analysis of the proposed action has been prepared, it should be incorporated by reference or appended to the statement as an aid in evaluating the environmental consequences (§ 1502.23, CEQ Regulations).

(e) All reasonable alternatives and their environmental impacts shall be addressed, regardless of whether or not they are within the authority of the Department (§ 1502.14(c), CEQ Regulations). Appropriate mitigation measures shall also be discussed (§ 1502.14(f), CEQ Regulations). See also paragraph 16 below.

(f) The basic content requirements for EISs are set forth in § 1502.10–25 of the CEQ Regulations. Bureaus shall follow the prescribed outline and content requirements described therein as closely as is feasible in each particular case.

(g) Each draft and final statement should refer to the underlying studies, reports and other documents considered by the preparing bureau and should indicate how such documents may be obtained. In general, with the exception of standard reference documents, such as Congressional materials, the bureau should maintain a file of the respective documents which may be consulted by interested persons. Even if especially significant documents are attached to the statement, care should be taken to insure that the statement remains an essentially self-contained instrument easily understood by the reader without the need for undue cross reference.

(4) *Utilizing Contractors:* A contractor may be selected to prepare the EIS. Bureau responsibility, in the event a contractor is employed, is outlined in § 1506.5(c) of the CEQ Regulations.

(5) *Circulation:* The entire draft and final environmental impact statement shall be circulated in accordance with § 1502.19 of the CEQ Regulations. Appendices and unchanged statements may be treated in accordance with §§ 1502.18(d) and 1503.4(c) of the CEQ Regulations. If the statement is unusually long the bureau may circulate the summary instead (§ 1502.12, CEQ Regulations), except that the entire statement shall be furnished to those persons and agencies listed in § 1502.19 of the CEQ Regulations.

(6) *Commenting:* (a) With respect to draft environmental impact statements, it is essential that the bureaus consult with, and take account of the comments of, appropriate Federal, state, and local agencies. This shall involve the formal solicitation of review and comments on the draft statement (§ 1503.1, CEQ Regulations). When appropriate, the procedures set forth in OMB Circular No. A–95, for obtaining state and local comments through clearing houses, shall be utilized (§ 1503.1(a)(2), CEQ Regulations).

(b) Comments should also be requested from individuals or organizations which appear to have a special interest in some significant environmental aspect of the proposed action (§ 1503.1(a)(4), CEQ Regulations).

(c) As to final statements, all substantive comments received on the draft (or summaries thereof where the response is exceptionally long) should be attached to each copy, whether or not each such comment is thought to merit individual discussion in the text of the statement (§ 1503.4(b), CEQ Regulations).

(d) Section 102(2)(C) of NEPA requires that the final environmental impact statement shall accompany the proposal to which it relates through the agency review process. See paragraph 10a above for the proper utilization of final statements.

13. *Proposals for Legislation.* a. Legislative environmental impact statements are required to be included in recommendations or reports on legislative proposals to Congress which significantly affect the quality of the human environment. A legislative EIS shall be considered part of the formal transmittal of a legislative proposal to Congress; although it may be sent to Congress up to 30 days later in order to allow time for completion and accuracy. In all instances, the legislative statement must be available in time for Congressional hearings and deliberations in order that it may serve as a basis for public and Congressional debate (§ 1506.8(a), CEQ Regulations).

b. Bureaus with primary responsibility for legislative proposals originating in the Department which will significantly affect the quality of the human environment shall be responsible for preparing legislative EISs.

c. Preparation of a legislative impact statement shall conform to the requirements for environmental impact statements as provided in paragraph 12 of this directive except as follows:

(1) There need not be a "scoping" process.

(2) The legislative impact statement, although prepared in the same manner as a draft impact statement, shall be considered the "detailed statement" required by statute. Provided that, when any of the following conditions exist, both a draft and final legislative environmental impact statement shall be prepared and circulated as provided in § 1503.1 and 1506.10 of the CEQ Regulations:

(a) A Congressional Committee with jurisdiction over the proposal has a rule requiring both draft and final environmental impact statements.

(b) The proposal results from a study process required by statute.

(c) Legislative approval is sought for Federal or federally assisted construction or other projects which the bureau recommends be located at specific geographic locations. For proposals requiring an environmental impact statement for the acquisition of space by the General Services Administration a draft statement shall accompany the Prospectus or the 11(b) Report of Building Project Surveys to the Congress, and a final statement shall be completed before site acquisition.

(d) The bureau decides to prepare draft and final statements.

d. Close coordination shall be maintained between the Office of the Departmental EQO and Office of the General Counsel in relation to the latters' normal responsibility concerning Departmental legislative proposals.

14. *Public Involvement.* Section 1506.6 of the CEQ Regulations requires public involvement in the NEPA process. To comply with this requirement bureaus shall:

a. Provide for public hearings whenever appropriate. Whenever under the normal policies or procedures of a bureau a hearing would be held on a matter requiring the preparation of an

environmental impact statement, the environmental aspects should be included in the hearing. In other cases the question of whether a hearing should be held with respect to an environmental matter shall be determined in accordance with the criteria set forth in § 1506.6(c) of the CEQ Regulations. Normally, all hearings contemplated in this paragraph should be based on a draft environmental impact statement, which should be made available to the public at least 15 days before the hearing.

b. Provide public notice of NEPA-related hearings, public meetings, and the availability of environmental documents. The notice should be provided by means most likely to inform those persons and agencies who may be interested or affected.

(1) Section 1506.6(b) of the CEQ Regulations provides notification methods that may be used, including publication in local newspapers of general circulation; notice to state and areawide clearinghouses pursuant to OMB Circular A-95; and notice by mail.

(2) A notice of the filing and availability of each environmental impact statement, draft and final, shall be inserted in the Federal Register by the responsible bureau. The Departmental EQO will supply a sample outline of such notices and information on the procedures to be followed.

c. Make environmental impact statements, along with any comments and underlying documents available to the public pursuant to the Freedom of Information Act (5 U.S.C. 552), the Department's regulations thereunder (31 CFR Part 1), and the disclosure regulations of the bureau § 1506.6(f) CEQ Regulations).

(1) These documents are to be placed in the public reading room of the Treasury Library in the Main Treasury Building, Washington, D.C., and the public reading rooms of the bureaus if any are maintained. The documents may be read or copied during working hours.

(2) Copies to be made available to the public shall normally be provided without charge, but when costs are significant, the bureau may, with the approval of the Departmental FQO, establish a fee which shall not exceed the actual cost per copy of reproducing the copies.

d. Provide for public involvement as specified elsewhere in this directive.

15. *Filing and Distribution of Environmental Impact Statements and Supplemental Statements.* a. Five (5) copies of draft and final environmental impact statements, comments, and responses shall be filed with EPA, Attention: Office of Federal Activities (A-104), 401 M Street S.W., Washington, D.C. 20460.

b. At the same time as they are filed with EPA, statements shall also be sent to commenting agencies and made available to the public § 1506.9, CEQ Regulations).

c. Any supplement made to an environmental impact statement shall be made a part of the formal record, if such a record exists, before a final decision on the proposal is made § 1502.9(c)(3), CEQ Regulations).

16. *Mitigation.* Bureaus shall ensure that mitigation measures that have been identified in environmental assessments and impact statement are carried out. Bureaus shall institute procedures, in coordination with the Departmental EQO, providing for "follow up" measures to ensure that the mitigation measures are carried out (§§ 1505.2(c) and 1505.3, CEQ Regulations).

17. *Commenting on Other Agencies' Impact Statements.* a. As set forth in paragraph 7a(6) of this directive, the Departmental EQO shall receive all environmental impact statements submitted by other agencies for comment and coordinate the appropriate review and reply.

b. If any bureau receives a request for comment direct from another agency the request, together with the respective statement, shall be referred to the Departmental EQO for appropriate action.

c. Comments should be confined to matters within the jurisdiction or expertise of the Department. However, comments need not be limited to environmental aspects but may relate to fiscal, economic, and other non-environmental matters of concern to the Department.

18. *Emergencies.* In the event of emergencies which prevent bureau observance of the provisions of this directive or the CEQ Regulations, the CEQ may be consulted, through the Departmental EQO, about alternative arrangements (Section 1506.11, CEQ Regulations).

19. *Other Requirements.* a. *Integrating Departmental Procedures With Other Environmental Review and Consultation Requirements.*

(1) Section 1501.7(a)(6) of the CEQ Regulations requires that as part of the scoping process agencies identifying other environmental review and consultation requirements so that other required analyses and studies may be prepared concurrently with, and integrated with, the environmental impact statements.

(2) Attention of the bureaus is directed particularly to the analyses and studies required by the Fish and Wildlife Coordination Act (16 U.S.C. 661 et seq.); the National Historic Preservation Act of 1966, as amended, (16 U.S.C. 470 et seq.); the Endangered Species Act of 1973 (16 U.S.C. 1531 et seq.); Executive Order 11988, "Floodplain Management", May 24, 1977; Executive Order 11990, "Protection of Wetlands", May 24, 1977; and similar requirements of other Acts and regulations such as these.

b. *EPA Review.* (1) *Section 309 of the Clean Air Act (42 U.S.C. 7609)* provides that the Administrator of EPA shall comment in writing on the environmental impact of any matter within the areas of EPA responsibility. Those areas include air and water quality, noise abatement and control, pesticide regulation, solid waste disposal, and generally applicable environmental radiation criteria and standards. Whenever an applicable bureau action is involved in one of these areas, the bureau is required to submit five (5) copies of the respective environmental impact statement to EPA for review and comment, in addition to the five (5) copies required in paragraph 15a of this directive.

(2) If the Administrator of EPA determines that the matter "is unsatisfactory from the standpoint of public health or welfare or environmental quality," the matter is to be referred to the CEQ in accordance with the criteria and procedures outlined in §§ 1504.2 and 1504.3 of the CEQ Regulations.

(3) Under Section 102(2)(C) of NEPA other Federal agencies are authorized to make similar reviews and referrals in accordance with the criteria and procedures in §§ 1504.2 and 1504.3 of the CEQ Regulations.

20. *Requirements for Floodplain Management and Protection of Wetlands.* a. Executive Orders 11988, "Floodplain Management", and 11990, "Protection of Wetlands", direct Federal agencies to ensure that the potential effects of any proposed actions they may take in a floodplain or wetland are considered and evaluated in their decisionmaking.

b. In a Federal Register notice of May 24, 1978 (43 FR 22311), the Department advised that, as a general rule, it does not engage in activities which would impact on floodplains or wetlands. It was further stated that no separate Treasury procedures implementing these executive Orders would be issued, but rather that such procedures would be incorporated in this directive.

c. Procedures for floodplain mangement and protection of wetlands are as follows:

(1) To the extent possible bureaus are to avoid actions which would result in modification or destruction of floodplains and wetlands and, wherever there is a practicable alternative, are to avoid direct or indirect support of new development or construction in floodplains and wetlands.

(2) In the case of any proposed Departmental action which may involve floodplains or wetlands, and which may require the preparation of an environmental assessment or impact statement, the assessment or impact statement shall include necessary data on the floodplain or wetlands in keeping with these procedures. In the event the proposed action does not require an assessment or impact statement, these procedures shall still be followed as concerns the floodplain or wetlands.

(3) In the event of floodplain or wetlands involvement, the following procedural steps are to be followed. Although these steps specifically mention floodplains, they are also applicable to wetlands involvement, as appropriate:

(a) Determine if the proposed action is in a floodplain.

(b) Provide for public involvement in a floodplain management decisionmaking process by informing the public of the intent to locate in the floodplain, and by encouraging public comments thereon.

(c) Identify and evaluate practicable alternatives to locating in a floodplain including alternative sites, alternative actions, or no action.

(d) If determined that the only practicable alternative is to locate in a floodplain, identify the impacts of the proposed action using the NEPA process identification and environmental assessment or impact statement procedures in this directive. Focus especially on the adverse impacts of the proposed action on lives and property in the area, and on natural and beneficial floodplain values.

(e) If harm to, or within a floodplain may result from the proposed action, determine ways to minimize the harm and to restore and preserve the floodplain values.

(f) Reevaluate the proposed alternatives, based on the information obtained from steps (d) and (e) above, and consider whether: the proposed action is still feasible at the site or the proposed action may be limited, and, if neither is acceptable, reevaluating the no action alternative.

(g) A statement of findings and public explanation, including a brief comment period, must be provided for the proposed action if reevaluation determines that action to be the only practicable alternative.

(h) These procedural steps are set forth in the Water Resources Council's (WRC) "Floodplain Management Guidelines". The WRC Guidelines should be utilized by the bureaus whenever there is any floodplain or wetlands involvement.

21. *Office of Primary Interest.* Office of Administrative Programs, Office of the Assistant Secretary (Administration).

This notice is submitted for the Department of the Treasury.

Dated: July 2, 1979.

Robert R. Fredlund,

Director of Administrative Programs.

[FR Doc. 79-20933 Filed 7-5-79; 8:45 am]

BILLING CODE 4810-25-M

Ice Cream Sandwich Wafers From Canada; Antidumping: Tentative Determination To Modify or Revoke Dumping Finding

AGENCY: U.S. Treasury Department.

ACTION: Tentative Revocation of Finding of Dumping.

SUMMARY: This notice is to advise the public that it appears that ice cream sandwich wafers from Canada are no longer being sold to the United States at less than fair value. Sales at less than fair value generally occur when the price of the merchandise sold for exportation to the United States is less than the price of such or similar merchandise sold in the home market or to third countries. In addition, the sole manufacturer has given assurances that they are not, and do not intend to resume selling ice cream sandwich wafers from Canada to the United States at less than fair value. If this action is made final, the finding of dumping covering the subject merchandise from Canada will be revoked. Interested persons are invited to comment on this action.

EFFECTIVE DATE: July 6, 1979.

FOR FURTHER INFORMATION CONTACT: Al Jemmott, Duty Assessment Division, U.S. Customs Service, 1301 Constitution Avenue, NW., Washington, D.C. 20229 (202-566-5492).

SUPPLEMENTARY INFORMATION: A finding of dumping with respect to ice cream sandwich wafers from Canada was published in the Federal Register on March 14, 1972 (37 FR 52993) (T.D. 72-77).

After due investigation, it has been determined tentatively that ice cream sandwich wafers from Canada are no longer being, nor likely to be, sold to the United States at less than fair value within the meaning of the Antidumping Act, 1921, as amended (19 U.S.C. 160 *et seq.*).

Statement of Reasons on Which This Tentative Determination Is Based

The investigation indicated that there have been no dumping duties assessed against ice cream sandwich wafers from Canada to the United States since 1974 and the sole manufacturer has given assurances that they do not intend to resume shipments of this merchandise to the United States at less than fair value.

Accordingly, notice is hereby given that the Department of the Treasury intends to revoke the finding of dumping with respect to ice cream sandwich wafers from Canada.

In accordance with § 153.40, Customs Regulations (19 CFR 153.40), interested persons may present written views or arguments, or request in writing that the Secretary of the Treasury afford an opportunity to present oral views.

Any requests that the Secretary of the Treasury afford an opportunity to present oral views should be addressed to the Commissioner of Customs, 1301 Constitution Avenue, NW., Washington, D.C. 20229, in time to be received by his office not later than 10 days from the date of publication of this notice in the Federal Register. Requests must be accompanied by a statement outlining the issues wished to be discussed.

Any written views or arguments should likewise be addressed to the Commissioner of Customs in time to be received by his office not later than 30 days from the date of publication in the Federal Register.

This notice is published pursuant to section 153.44(c) of the Customs Regulations (19 CFR 153.44(c)).

Robert H. Mundheim,

General Counsel.

June 27, 1979.

[FR Doc. 79-20869 Filed 7-5-79; 8.45 am]

BILLING CODE 4810-22-M

VETERANS ADMINISTRATION

Merit Review Board for Rehabilitative Engineering Research and Development; Meeting

The Veterans Administration gives notice pursuant to Pub. L. 92-463 of a meeting of the Merit Review Board for Rehabilitative Engineering Research and Development. This meeting will be for

the purpose of evaluating the merit of proposals for the funding of research and development work in the field of rehabilitative engineering and to make recommendations to the Director, Rehabilitative Engineering Research and Development Service. This meeting will convene in Room A35 of the Veterans Administration Central Office Building, 810 Vermont Avenue, NW, Washington, D.C. The meeting will be held August 16 and 17, 1979. It will start at 8 a.m. each day and last until approximately 5:30 p.m.

In accordance with the provisions set forth in sections 552b(c)(4), (c)(6) and (c)(9)(B), Title 5, United States Code, this meeting will be closed after approximately one-half hour from the start, for the review, discussion and evaluation of initial and renewal research and development projects. The closed portion involves the review and evaluation of commercial and financial information from a private contractor. In addition, the closed portion involves the discussion, references to, and oral review of site visits, staff and consulting critiques of research protocols and similar documents that necessitate the consideration of personal qualifications and performance and the competence of individual investigators, the disclosure of which would consittute a clearly unwarranted invasion of privacy. Finally, decisions recommended by the board are strictly advisory in nature; other factors are considered in final decisions. Premature disclosure of board recommendations would be likely to significantly frustrate implementation of final proposed actions. Thus, the closing is in accordance with the provisions of Title 5, United States Code as cited above and the determination of the Administrator of the Veterans Affairs pursuant to section 10(d) of Pub. L. 92-463 as amended by Pub. L. 94-409.

Due to the limited seating capacity of the room, those who plan to attend the open session should contact Mr. James R. McConnell, Biomedical Engineer (153), Rehabilitative Engineering Research and Development Service, Veterans Administration Central Office, 810 Vermont Avenue, NW, Washington, DC 20420 (phone: 202-389-5177) at least 3 days prior to the meeting. A roster of this Merit Review Board may be obtained from the same source.

Dated: June 28, 1979.

Max Cleland,

Administrator.

[FR Doc. 79-20846 Filed 7-5-79; 8:45 am]

BILLING CODE 3320-01-M

INTERSTATE COMMERCE COMMISSION

Motor Carrier Board Transfer Proceedings

The following publications include motor carrier, water carrier, broker, and freight forwarder transfer applications filed under Section 212(b), 206(a), 211, 312(b), and 410(g) of the Interstate Commerce Act.

Each application (except as otherwise specifically noted) contains a statement by applicants that there will be no significant effect on the quality of the human environment resulting from approval of the application.

Protests against approval of the application, which may include request for oral hearing, must be filed with the Commission on or before August 6, 1979. Failure seasonably to file a protest will be construed as a waiver of opposition and participation in the proceeding. A protest must be served upon applicants' representative(s), or applicants (if no such representative is named), and the protestant must certify that such service has been made.

Unless otherwise specified, the signed original and six copies of the protest shall be filed with the Commission. All protests must specify with particularity the factual basis, and the section of the Act, or the applicable rule governing the proposed transfer which protestant believes would preclude approval of the application. If the protest contains a request for oral hearing, the request shall be supported by an explanation as to why the evidence sought to be presented cannot reasonably be submitted through the use of affidavits.

The operating rights set forth below are in synopses form, but are deemed sufficient to place interested persons on notice of the proposed transfer.

No. MC-FC-78137, filed May 7, 1979. Transferee: D. A. EXPRESS, INC., 1570 Van Drunen, South Holland, IL 60473. Transferor: T. W. Express of Indiana, Inc., 1414 S. West, Indianapolis, IN 46225. Representative: Daniel C. Sullivan, Suite 1600, 10 S. LaSalle St., Chicago, IL 60603. By decision of June 18, 1979 the Motor Carrier Board granted authority for the purchase by transferee of the operating rights of transferor, as set forth in Certificate No. MC-52680 (Sub-No. 1), as follows: *Such merchandise* as is dealt in by mail order houses, when such merchandise is transported for mail order or retail merchandise establishments, from Chicago, IL, to Danville, IL, and points within 70 miles of Danville; meats, meat products, and meat byproducts, dairy products and articles distributed by meat-packing houses, as described in sections A, B, and C of the Appendix to the report of the Commission in *Modification of Permits-Packing House Products*, 46 M.C.C. 23, generally from Chicago and Danville, IL, to points within 70 miles of Danville, and from Danville, IL, to Kokomo, IN, and points in IN within 15 miles of Kokomo. Tranferee presently holds no authority from this Commission. Application has not been filed for temporary authority under 49 U.S.C. 11349.

Interested persons may file petitions for reconsideration on or before July 26, 1979. An original and six copies must be submitted together with a statement certifying that one copy was served on each party of record. If a petition is filed, the effective date of the decision will be stayed pending disposition of the petition. Replies may be filed within 20 days from the final date for filing petitions.

H. G. Homme, Jr.,

Secretary.

[FR Doc. 79-20760 Filed 7-5-79; 8:45 am]

BILLING CODE 7035-01-M

[Volume No. 73]

Permanent Authority Decisions; Decision-Notice

Decided: June 19, 1979.

The following applications, filed on or after March 1, 1979, are governed by Special Rule 247 of the Commission's *Rules of Practice* (49 CFR 1100.247). These rules provide, among other things, that a petition for intervention, either in support of or in opposition to the granting of an application, must be filed with the Commission within 30 days after the date notice of the application is published in the Federal Register. Protests (such as were allowed to filings prior to March 1, 1979) *will be rejected.* A petition for intervention without leave must comply with Rule 247(k) which requires petitioner to demonstrate that it (1) holds operating authority permitting performance of any of the services which the applicant seeks authority to perform, (2) has the necessary equipment and facilities for performing that service, and (3) has performed service within the scope of the application either (a) for those supporting the application, or, (b) where the service is not limited to the facilities or particular shippers, from and to, or between, any of the involved points.

Persons unable to intervene under Rule 247(k) may file a petition for leave to intervene under Rule 247(l) setting forth the specific grounds upon which it

is made, including a detailed statement of petitioner's interest, the particular facts, matters, and things relied upon, including the extent, if any, to which petitioner (a) has solicited the traffic or business of those supporting the application, or, (b) where the identity of those supporting the application is not included in the published application notice, has solicited traffic or business identical to any part of that sought by applicant within the affected marketplace the extent to which petitioner's interest will be represented by other parties, the extent to which petitioner's participation may reasonably be expected to assist in the development of a sound record, and the extent to which participation by the petitioner would broaden the issues or delay the proceeding.

Petitions not in reasonable compliance with the requirements of the rules may be rejected. An original and one copy of the petition to intervene shall be filed with the Commission, and a copy shall be served concurrently upon applicant's representative, or upon applicant if no representative is named.

Section 247(f) provides, in part, that an applicant which does not intend to timely prosecute its application shall promptly request that it be dismissed, and that failure to prosecute an application under the procedures of the Commission will result in its dismissal.

If an applicant has introduced rates as an issue it is noted. Upon request, an applicant must provide a copy of the tentative rate schedule to any protestant.

Further processing steps will be by Commission notice, decision, or letter which will be served on each party of record. *Broadening amendments will not be accepted after the date of this publication.*

Any authority granted may reflect administrative acceptable restrictive amendments to the service proposed below. Some of the applications may have been modified to conform to the Commission's policy of simplifying grants of operating authority.

Findings: With the exception of those applications involving duly noted problems (e.g., unresolved common control, unresolved fitness questions, and jurisdictional problems) we find, preliminarily, that each common carrier applicant has demonstrated that its proposed service is required by the present and future public convenience and necessity, and that each contract carrier applicant qualifies as a contract carrier and its proposed contract carrier service will be consistent with the public interest and the transportation policy of 49 U.S.C. 10101. Each applicant is fit, willing, and able properly to perform the service proposed and to conform to the requirements of Title 49, Subtitle IV, United States Code, and the Commission's regulations. Except where specifically noted, this decision is neither a major Federal action significantly affecting the quality of the human environment nor a major regulatory action under the Energy Policy and Conservation Act of 1975.

In those proceedings containing a statement or note that dual operations are or may be involved we find, preliminarily and in the absence of the issue being raised by a petitioner, that the proposed dual operations are consistent with the public interest and the transportation policy of 49 U.S.C. 10101 subject to the right of the Commission, which is expressly reserved, to impose such terms, conditions or limitations as it finds necessary to insure that applicant's operations shall conform to the provisions of 49 U.S.C. 10930(a) [formerly section 210 of the Interstate Commerce Act].

In the absence of legally sufficient petitions for intervention, filed on or before August 6, 1979 (or, if the application later becomes unopposed), appropriate authority will be issued to each applicant (except those with duly noted problems) upon compliance with certain requirements which will be set forth in a notification of effectiveness of the decision-notice. To the extent that the authority sought below may duplicate an applicant's other authority, such duplication shall be construed as conferring only a single operating right.

Applicants must comply with all specific conditions set forth in the grant or grants of authority within 90 days after the service of the notification of the effectiveness of this decision-notice, or the application of a non-complying applicant shall stand denied.

By the Commission, Review Board Number 1, Members Carleton, Joyce and Jones.

H. G. Homme, Jr.,

Secretary.

MC 7555 (Sub-72F), filed March 5, 1979. Applicant: TEXTILE MOTOR FREIGHT, INC., P.O. Box 70, Ellerbe, NC 28338. Representative: Terrence D. Jones, 2033 K St., NW., Washington, DC 20006. To operate as a *common carrier,* by motor vehicle, in interstate or foreign commerce, over irregular routes, transporting *foodstuffs* (except in bulk), (a) from the facilities of American Home Foods, Division of American Home Products Corporation, at Milton, PA, to points in AL, GA, NC, and SC, and (b) from Seagrove, NC, to the facilities of American Home Foods, Division of American Home Products Corporation, at Milton, PA, restricted in (a) and (b) above to the transportation of traffic originating at the named origins and destined to the indicated destinations. (Hearing site: Washington, DC.)

MC 53965 (Sub-148F), filed March 5, 1979. Applicant: GRAVES TRUCK LINE, INC., P.O. Drawer 1387, Salina, KS 67401. Representative: Bruce A. Bullock (same address as applicant). To operate as a *common carrier,* by motor vehicle, in interstate or foreign commerce, over irregular routes, transporting: (1) *pizza and pizza ingredients and* (2) *materials and supplies used in the manufacture and distribution of pizza and pizza ingredients,* between Salina, KS, on the one hand, and, on the other, points in AL, AR, AZ, CA, CO, GA, IA, ID, IL, IN, KY, LA, MI, MN, MO, MS, MT, NC, ND, NE, NM, NV, OH, OK, OR, PA, SC, TN, TX, UT, WA, WI, and WY. (Hearing site: Salina KS, or Marshall, MN.)

MC 56244 (Sub-76F), filed March 5, 1979. Applicant: KUHN TRANSPORTATION COMPANY, INC., P.O. Box 98, R.D. #2, Gardners, PA 17324. Representative: John M. Musselman, P.O. Box 1146, 410 North Third St., Harrisburg, PA 17108. To operate as a *common carrier,* by motor vehicle, in interstate or foreign commerce, over irregular routes, transporting (1) *foodstuffs* (except in bulk), and (2) *materials, equipment, and supplies* used in the manufacture and distribution of foodstuffs, (except commodities in bulk), between the facilities of Anderson Clayton Foods, Division of Anderson Clayton and Company, at Jacksonville, IL, on the one hand, and, on the other, points in DE, MD, NJ, PA, and DC, restricted to the transportation of traffic originating at the named origins and destined to the indicated destinations. (Hearing site: Harrisburg, PA, or Washington, DC.)

MC 65895 (Sub-6F), filed March 1, 1979. Applicant: REDDAWAY'S TRUCK LINE, a corporation, 1721 N.W. Northrup St., Portland, OR 97209. Representative: Lawrence V. Smart, Jr., 419 N.W. 23rd Ave., Portland, OR 97210. To operate as a *common carrier,* by motor vehicle, in interstate or foreign commerce, over irregular routes, transporting (1) *precast concrete products,* and (2) *materials and supplies* used in the manufacture and installation of precast concrete products, between the facilities of Utility Vault Co., at (a) Wilsonville, OR, and (b) Auburn, WA. (Hearing site: Portland, OR.)

MC 85934 (Sub-97F), filed March 5, 1979. Applicant: MICHIGAN TRANSPORTATION COMPANY, a corporation, 3601 Wyoming, P.O. Box 248, Dearborn, MI 48121. Representative: Martin J. Leavitt, 22375 Haggerty Road, P.O. Box 400, Northville, MI 48167. To operate as a *common carrier*, by motor vehicle, in interstate or foreign commerce, over irregular routes, transporting *liquid chemicals*, (a) between Detroit, MI, on the one hand, and, on the other, points in IL, IN, NY, OH, and PA, (b) between Indianapolis, IN, on the one hand, and, on the other, points in IL, KY, OH, and PA, and (c) between South Windsor, CT, on the one hand, and, on the other, points in MI, NY OH, PA, and RI. (Hearing site: Chicago, IL, or Washington, DC.)

MC 106074 (Sub-89F), Filed March 5, 1979. Applicant: B AND P MOTOR LINES, INC., P.O. Box 727, Forest City, NC 28043. Representative: George W. Clapp, P.O. Box 836, Taylors, SC 29687. To operate as a *common carrier*, by motor vehicle, in interstate or foreign commerce, over irregular routes, transporting: (1) *recycled boxboard*, from Taylors, SC, to points in AL, AR, IA, IL, KS, LA, MN, MO, MS, NE, OK, TX, and WI; and (2) *waste paper*, for recycling, in the reverse direction (Hearing site: Greenville, SC.)

Note.—Dual operations may be involved.

MC 106074 (Sub-90F), Filed March 1,1979. Applicant: B AND P MOTOR LINES, INC., Oakland Road and U.S. Highway 221 South, Forest City, NC 28043: Representative: Clyde W. Carver, P.O. Box 720434, Atlanta, GA 30328. To operate as a *common carrier*, by motor vehicle, in interstate or foreign commerce, over irregular routes, transporting *plastic containers and plastic lids*, from the facilities of Genpak Corporation, at Forest City, NC, to points in IA, IL, IN, KS, MI, MN, MO, NE, OH, OK, SD, and WI. (Hearing site: Charlotte, NC, or Washington, DC.)

Note.—Dual operations may be involved.

MC 109124 (Sub-63F), Filed March 5, 1979. Applicant: SENTLE TRUCKING CORPORATION, P.O. Box 7850, Toledo, OH 43619. Representative: James M. Burtch, 100 E. Broad St., Suite 1800, Columbus, OH 43215.To operate as a *common carrier*, by motor vehicle, in interstate or foreign commerce, over irregular routes, transporting *iron and steel articles*, from the facilities of Republic Steel Corporation, at Canton, Cleveland, Elyria, Niles, Warren, Youngstown, and Massillon, OH, to points in IL, IN, MI, AND PA. (Hearing site: Columbus, OH.)

MC 110325 (Sub-98F), filed March 5, 1979. Applicant: TRANSCON LINES, a Corporation, P.O. Box 92220, Los Angeles, CA 90009. Representative: Wentworth E. Griffin, Midland Bldg., 1221 Baltimore Ave., Kansas City, MO 64105. To operate as a *common carrier*, by motor vehicle, in interstate or foreign commerce, over regular routes, transporting *general commodities* (except those of unusual value, classes A and B explosives, household goods as defined by the Commission, commodities in bulk, and those requiring special equipment) between Portland, OR, and Tacoma WA, over Interstate Hwy 5, as an alternate route for operating convenience only, serving no intermediate points, and serving the termini for purpose of joinder only, restricted against the transportation of traffic originating at and destined to Portland, OR, and Tacoma and Seattle, WA. (Hearing site: Washington, DC.)

MC 111594 (Sub-83F), filed March 5, 1979. Applicant: C W TRANSPORT, INC., 610 High St., Wisconsin Rapids, WI 54494. Representative: Edward G. Bazelon, 39 South LaSalle St., Chicago, IL 60603. To operate as a *common carrier*, by motor vehicle, in interstate or foreign commerce, transporting *general commodities* (except those of unusual value, classes A and B explosives, household goods as defined by the Commission, commodities in bulk, and those requiring special equipment), serving the facilities of John H. Harland Co., at or near O'Fallon, MO, as an off-route point in connection with applicant's other-authorized regular-route operations. (Hearing site: St. Louis, MO.)

MC 113784 (Sub-77F), filed March 1, 1979. Applicant: LAIDLAW TRANSPORT LIMITED, P.O. Box 3020, Station B, 65 Guise Street, Hamilton, Ontario, Canada L8L4M1. Representative: David A. Sutherlund, 1150 Connecticut Avenue, NW., Washington, DC 20036. To operate as a *common carrier*, by motor vehicle, in foreign commerce only, over irregular routes, transporting *cement, in bags*, between ports of entry on the international boundary line between United States and Canada on the Niagara River, and those points in NY on and west of NY Hwy 14. (Hearing site: Wasington, DC, or Buffalo, NY.)

MC 113784 (Sub-78F), filed March 1, 1979. Applicant: LAIDLAW TRANSPORT LIMITED, P.O. Box 3020, Station B, 65 Guise Street, Hamilton, Ontario, Canada L8L4M1. Representative: David A. Sutherlund, 1150 Connecticut Avenue, NW., Suite 400, Washington, DC 20036. To operate as a *common carrier*, by motor vehicle, in foreign commerce only, over irregular routes, transporting *scrap metal, in dump vehicles*, between ports of entry on the international boundary line between the United States and Canada on the Detroit and St. Clair Rivers and points in MI. (Hearing site: Washington, DC, or Buffalo, NY.)

MC 114045 (Sub-532F), filed March 1, 1979. Applicant: TRANS-COLD EXPRESS, INC., P.O. Box 61228, Dallas, TX 75261. Representative: J. B. Stuart (same address as applicant). To operate as a *common carrier*, by motor vehicle, in interstate or foreign commerce, over irregular routes, transporting *prepared foodstuffs* (except in bulk), in vehicles equipped with mechanical refrigeration, (a) from the facilities of the Pillsbury Company, at New Albany, IN, to Denison, TX, and (b) from the facilities of the Pillsbury Company, at Denison, TX, to points in CA. (Hearing site: Chicago, IL.)

MC 114045 (Sub-533F), filed March 5, 1979. Applicant: TRANS-COLD EXPRESS, INC., P.O. Box 61228, Dallas, TX 75261. Representative: J. B. Stuart (same address as applicant). To operate as a *common carrier*, by motor vehicle, in interstate or foreign commerce, over irregular routes, transporting *meats, meat products and meat byproducts, and articles distributed by meat-packing houses*, as described in sections A and C of Appendix I to the report in *Descriptions in Motor Carrier Certificates*, 61 M.C.C. 209 and 766, (except hides and commodities in bulk), (a) from the facilities of MBPXL Corporation, at or near Friona and Plainview, TX, to points in CA, and (b) from the facilities of Armour & Co., at or near Hereford, TX, to points in CA. (Hearing site: Dallas, TX, or Wichita, KS.)

MC 114734 (Sub-29F), filed March 5, 1979. Applicant: D AND J TRANSFER CO., a corporation, Highway 4 North, Sherburn, MN 56171. Representative: Lavern R. Holdeman, 521 South 14th St., P.O. Box 81849, Lincoln, NE 68501. To operate as a *contract carrier*, by motor vehicle, in interstate or foreign commerce, over irregular routes, transporting *meats, meat products and meat byproducts, and articles distributed by meat-packing houses*, as described in sections A and C of Appendix I to the report in *Descriptions in Motor Carrier Certificates*, 61 M.C.C. 209 and 766, (except hides and commodities in bulk), (a) from the facilities of Iowa Beef Processors, Inc., at or near Luverne, MN, to Dakota City,

NE, under continuing contract(s), with Iowa Beef Processors, Inc., of Dakota City, NE. (Hearing site: Kansas City, MO, or Omaha, NE.)

Note.—Dual operations may be involved.

MC 115904 (Sub-137F), filed March 1, 1979. Applicant: GROVER TRUCKING CO., a corporation, 1710 West Broadway, Idaho Falls, ID 83401. Representative: Timothy R. Stivers, P.O. Box 162, Boise, ID 83701. To operate as a *common carrier*, by motor vehicle, in interstate or foreign commerce, over irregular routes, transporting (1) *hardwood flooring*, and (2) *materials and supplies* used in the installation of hardwood flooring, from points in TN, to Boise, ID. (Hearing site: Boise, ID.)

MC 116045 (Sub-48F), filed March 1, 1979. Applicant: NEUMAN TRANSIT CO., INC., P.O. 38, Rawlins, WY 82301. Representative: Leslie R. Kehl, 1600 Lincoln Center, 1660 Lincoln St., Denver, CO 80264. To operate as a *common carrier*, by motor vehicle, in interstate or foreign commerce, over irregular routes, transporting *liquid sulphur*, in bulk, from points in Park County, WY, to Denver, CO. (Hearing site: Denver CO.)

MC 117765 (Sub-253F), filed March 5, 1979. Applicant: HAHN TRUCK LINE, INC., 1100 S. MacArthur, P.O. Box 75218, Oklahoma City, OK 73147. Representative: R. E. Hagan (same address as applicant). To operate as a *common carrier*, by motor vehicle, in interstate or foreign commerce, over irregular routes, transporting *fabricated metal products*, from the facilities of the United States Gypsum Company, at Franklin Park, IL, to those points in the United States in and east of ND, SD, NE, KS, OK, and TX. (Hearing site: Oklahoma City, OK.)

MC 119765 (Sub-75F), filed March 5, 1979. Applicant: EIGHT WAY XPRESS, INC., 5402 South 27th St., Omaha, NE 68107. Representative: Marshall D. Becker, Suite 610, 7171 Mercy Rd, Omaha, NE 68106. To operate as a *common carrier*, by motor vehicle, in interstate or foreign commerce, over irregular routes, transporting *foodstuffs*, from the facilities of American Home Foods, Division of American Home Products Corporation, at or near LaPorte, IN, to points in IA, KS, MO, NE, ND, and SD. (Hearing site: Omaha, NE, or Chicago, IL.)

MC 119894 (Sub-11F), filed March 5, 1979. Applicant: BOWARD TRUCK LINE, INC., 104 Azar Bldg., Glen Burnie, MD 21061. Representative: M. Bruce Morgan (same address as applicant). To operate as a *common carrier*, by motor vehicle, in interstate or foreign commerce, over irregular routes, transporting *paper and paper products*, (a) from Hartsville, SC, to Greensboro, NC, and Richmond and Chester, VA, and (b) from Richmond and Chester, VA, to points in NC and SC. (Hearing site: Charlotte or Winston-Salem, NC.)

MC 120364 (Sub-19F), filed March 1, 1979. Applicant: A & B FREIGHT LINES, INC., 2800 Falund St., Rockford, IL 61109. Representative: Robert M. Kaske (same address and applicant). To operate as a *common carrier*, by motor vehicle, in interstate or foreign commerce, over irregular routes, transporting *general commodities* (except those of unusual value, classes A and B explosives, household goods as defined by the Commission, commodities in bulk, and those requiring special equipment), between Clinton, Dubuque, and Davenport, IA, and Morrison, IL, on the one hand, and, on the other, Chicago, Elizabeth, Savanna, Woodbine, Apple River, Hanover, Galena, and Scales Mound, IL, and those points in IL bounded by a line beginning at the IL-WI State line and extending southerly along IL Hwy. 78 to junction IL Hwy. 88, then along IL Hwy. 88 to junction IL Hwy. 92, then easterly along IL Hwy. 92 to junction U.S. Hwy. 34, then easterly along U.S. Hwy. 34 to junction, IL Hwy. 59, then northerly along IL Hwy. 59 to junction IL Hwy. 83 to the IL-WI State line, and then west along the IL-WI State line to the point of beginning. (Hearing site: Washington, DC, or Chicago, IL.)

Note.—Dual operations may be involved.

MC 124964 (Sub-33F), filed March 1, 1979. Applicant: J. M. BOOTH TRUCKING, INC., P.O. Box 907, Eustis, FL 32726. Representative: George A. Olsen, P.O. Box 357, Gladstone, NJ 07934. To operate as a *contract carrier*, by motor vehicle, in interstate or foreign commerce, over irregular routes, transporting: (1) *dry wall products, and materials, equipment, and supplies* used in the installation of dry wall products (except commodities in bulk), from Eustis, FL, to points in AL, GA, and SC; (2) *Materials, equipment, and supplies* used in the manufacture and distribution of dry wall products (except commodities in bulk), from those points in the United States in and east of MN, IA, MO, AR, OK, and TX, to Eustis, FL, under continuing contract(s) in (1) and (2) above with Tool World Inc., of Eustis, FL. (Hearing site: Jacksonville, FL, or Washington, DC.)

MC 125335 (Sub-51F), filed March 5, 1979. Applicant: GOODWAY TRANSPORT, INC., P.O. Box 2283, York, PA 17405. Representative: Gailyn L. Larsen, P.O. Box 82816, Lincoln, NE 68501. To operate as a *common carrier*, by motor vehicle, in interstate or foreign commerce, over irregular routes, transporting *prunes, prune extract, and prune juice*, in containers, from the facilities of Diamond/Sunsweet, Inc., at or near Middleboro, MA, to points in FL. (Hearing site: San Francisco, CA, or Lincoln, NE.)

MC 125335 (Sub-53F), filed March 5, 1979. Applicant: GOODWAY TRANSPORT, INC., P.O. Box 2283, York, PA 17405. Representative: Gailyn L. Larsen, P.O. Box 82816, Lincoln, NE 68501. To operate as a *common carrier*, by motor vehicle, in interstate or foreign commerce, over irregular routes, transporting *confectionery* from (A) the facilities of E. J. Brach & Sons, at or near Chicago, IL, to Morrow, GA, and (B) from Morrow, GA, to points in FL. (Hearing site: Chicago, IL, or Harrisburg, PA.)

MC 128205 (Sub-65F), filed March 5, 1979. Applicant: BULKMATIC TRANSPORT COMPANY, a Corporation, 12000 South Doty Ave., Chicago, IL 60628. Representative: Arnold L. Burke, 180 N. LaSalle St., Chicago, IL 60601. To operate as a *common carrier*, by motor vehicle, in interstate or foreign commerce, over irregular routes, transporting *salt*, in bulk, in tank vehicles, from the facilities of Morton Salt Company, at or near Chicago, IL, to points in IN and MI. (Hearing site: Chicago, IL.)

MC 134035 (Sub-35F), filed March 2, 1979. Applicant: DOUGLAS TRUCKING COMPANY, a Corporation, P.O. Box 698, Highway 75 South, Corsicana, TX 75110. Representative: Clint Oldham, 1108 Continental Life Bldg., Fort Worth, TX 76102. To operate as a *common carrier*, by motor vehicle, in interstate or foreign commerce, over irregular routes, transporting *vacuum cleaners, vacuum attachments, vacuum tools, vacuum parts, and vacuum cleaning compounds*, (A) from Bedford, Bellville, Chagrin Falls, Cleveland, Fremont and Marysville, OH, and Andrews, TX, to Orlando, FL, and (B) from Bedford, Bellville, Chagrin Falls, Cleveland, Fremont and Marysville, OH, to Andrews, TX. (Hearing site: Dallas, TX.)

MC 135524 (Sub-15F), filed March 5, 1979. Applicant: G. F. TRUCKING CO., a Corporation, P.O. Box 229, 1028 West Rayen Ave., Youngstown, OH 44501. Representative: George Fedorisin, 912 Salts Springs Road, Youngstown, OH 44509. To operate as a *common carrier*, by motor vehicle, in interstate or foreign commerce, over irregular routes, transporting (1) *iron and steel articles*, and (2) *materials, equipment, and*

supplies used in the manufacture and distribution of iron and steel articles, between Sharon, PA, on the one hand, and, on the other, points in IL, IN, IA, KY, MD, MI, MN, MO, OH (except Niles), VA, WV, and WI. (Hearing site: Pittsburgh, PA, or Washington, DC.)

MC 135524 (Sub-16F), filed March 5, 1979. Applicant: G. F. TRUCKING CO., a Corporation, P.O. Box 229, 1028 West Rayen Ave., Youngstown, OH 44501. Representative: George Fedorisin, 912 Salts Springs Rd., Youngstown, OH 44509. To operate as a *common carrier*, by motor vehicle, in interstate or foreign commerce, over irregular routes, transporting *plastic pipe, fittings, couplings and materials, accessories and supplies* (except commodities in bulk), between the facilities of Sampson Plastic Conduit and Pipe Corporation in Geneva County, AL, on the one hand, and, on the other, points in AR, CT, DE, FL, GA, IL, IN, KY, LA, MA, MD, ME, MI, MN, MO, MS, NC, NH, NJ, NY, OH, OK, PA, RI, SC, TN, VA, WI, WV and DC. (Hearing site: Mobile, AL, or Columbus, OH.)

MC 135524 (Sub-17F), filed March 5, 1979. Applicant: G. F. TRUCKING CO., a Corporation, P.O. Box 229, 1028 West Rayen Ave., Youngstown, OH 44501. Representative: George Fedorisin, 912 Salts Springs Rd., Youngstown, OH 44509. To operate as a *common carrier*, by motor vehicle, in interstate or foreign commerce, over irregular routes, transporting *treated poles, crossarms, cross ties, switch ties, lumber, and piling*, from the facilities of American Creosote Works, Inc., at or near (a) Louisville, MS, and (b) Jackson, TN, to those points in the United States in and east of WI, IA, NE, KS, OK, and TX. (Hearing site: Nashville, TN, or Columbus, OH.)

MC 135524 (Sub-18F), filed March 5, 1979. Applicant: G. F. TRUCKING CO., a Corporation, P.O. Box 229, 1028 West Rayen Ave., Youngstown, OH 44501. Representative: George Fedorisin, 912 Salts Springs Rd., Youngstown, OH 44509. To operate as a *common carrier*, by motor vehicle, in interstate or foreign commerce, over irregular routes, transporting *railroad ties, timbers, poles, pilings, and lumber*, from the facilities of Columbus Wood Company, at (1) Madison and Cambria, IL, (2) Indianapolis, Bloomington, Terre Haute, and Winslow, IN, (3) Waverly and Northup, OH, and (4) Louisville and Mayfield, KY, to points in AR, IA, IL, IN, KS, KY, MI, MO, NY, OH, PA, TN, WI, and WV. (Hearing site: Columbus, OH.)

MC 135524 (Sub-19F), filed March 5, 1979. Applicant: G. F. TRUCKING CO., a Corporation, P.O. Box 229, 1028 West Rayen Ave., Youngstown, OH 44501. Representative: George Fedorisin, 912 Salts Springs Rd., Youngstown, OH 44509. To operate as a *common carrier*, by motor vehicle, in interstate or foreign commerce, over irregular routes, transporting *roofing materials*, from the facilities of Koppers Company, Inc., at (a) Youngstown, (b) Wickliffe, and (c) Heath, OH, to points in CT, DE, IN, KY, MA, MD, ME, MI, NH, NJ, NY, PA, RI, VA, VT, WV, and DC. (Hearing site: Pittsburgh, PA, or Columbus, OH.)

MC 135524 (Sub-20F), filed March 5, 1979. Applicant: G. F. TRUCKING CO., a Corporation, P.O. Box 229, 1028 West Rayen Ave., Youngstown, OH 44501. Representative: George Fedorisin, 912 Salts Springs Rd., Youngstown, OH 44509. To operate as a *common carrier*, by motor vehicle, in interstate or foreign commerce, over irregular routes, transporting *lumber, lumber mill products, forest products, and wood products*, from Vancouver, WA, to points in the United States (except AK and HI). (Hearing site: Portland, OR, or Columbus, OH.)

MC 135524 (Sub-21F), filed March 5, 1979. Applicant: G. F. TRUCKING CO., a Corporation, P.O. Box 229, 1028 West Rayen Ave., Youngstown, OH 44501. Representative: George Fedorisin, 912 Salts Springs Rd., Youngstown, OH 44509. To operate as a *common carrier*, by motor vehicle, in interstate or foreign commerce, over irregular routes, transporting *lumber, lumber products, and wood products*, from the facilities of J. W. Black Lumber Company, at or near Corning, AR, to points in the United States (except AK and HI). (Hearing site: Little Rock, AR, or Columbus, OH.)

MC 135524 (Sub-22F), filed March 5, 1979. Applicant: G. F. TRUCKING CO., a Corporation, P.O. Box 229, 1028 West Rayen Ave., Youngstown, OH 44501. Representative: George Fedorisin, 912 Salts Springs Rd., Youngstown, OH 44509. To operate as a *common carrier*, by motor vehicle, in interstate or foreign commerce, over irregular routes, transporting *clay and clay products*, from the facilities of Waverly Mineral Products Company, at or near Meigs, GA, to points in AL, AR, CT, DE, FL, IL, IN, IA, KS, KY, LA, ME, MD, MA, MI, MN, MS, MO, NE, NH, NJ, NY, NC, ND, OH, OK, PA, RI, SC, SD, TN, TX, VT, VA, WV, WI, and DC. (Hearing site: Jacksonville, FL, or Atlanta, GA.)

MC 139495 (Sub-419F), filed March 1, 1979. Applicant: NATIONAL CARRIERS, INC., 1501 East 8th Street, P.O. Box 1358, Liberal, KS 67901. Representative: Herbert Alan Dubin, 1320 Fenwick Lane, Silver Spring, MD 20910. To operate as a *common carrier*, by motor vehicle, in interstate or foreign commerce, over irregular routes, transporting *toys and games*, between the facilities of the Milton Bradley Company, at or near East Longmeadow, MA, and the facilities of the Milton Bradley Company, at or near Voorheesville, NY. (Hearing site: Washington, DC.)

MC 139495 (Sub-420F), filed March 1, 1979. Applicant: NATIONAL CARRIERS, INC., 1501 East 8th Street, P.O. Box 1358, Liberal, KS 67901. Representative: Herbert Alan Dubin, 1320 Fenwick Lane, Silver Spring, MD 20910. To operate as a *common carrier*, by motor vehicle, in interstate or foreign commerce, over irregular routes, transporting (1) *paper and paper products*, from Cincinnati and Hamilton, OH, and Courtland, AL, to those points in the United States in and west of MN, IA, MO, AR, and LA, (except AK and HI), and (2) *materials and supplies* used in the manufacture of the commodities in (1) above, (except commodities in bulk), in the reverse direction. (Hearing site: Washington, DC.)

MC 139495 (Sub-422F), filed March 1, 1979. Applicant: NATIONAL CARRIERS, INC., 1501 East 8th Street, P.O. Box 1358, Liberal, KS 67901. Representative: Herbert Alan Dubin, 1320 Fenwick Lane, Silver Spring, MD 20910. To operate as a *common carrier*, by motor vehicle, in interstate or foreign commerce, over irregular routes, transporting (1) *foodstuffs* (except in bulk), from Kansas City, MO, to those points in the United States in and east of MN, IA, NE, KS, OK, and TX; and (2) *doughnut mix, flour, sugar, shortening, yeast, fruit filling, juices*, and *materials and supplies* used in the operation of a doughnut shop (except commodities in bulk), from Bonner Springs, KS, to points in CA, OR, CO, TX, MN, IL, and OH. (Hearing site: Washington, DC, or Kansas City, MO.)

MC 139495 (Sub-423F), filed March 1, 1979. Applicant: NATIONAL CARRIERS, INC., 1501 East 8th Street, P.O. Box 1358, Liberal, KS 67901. Representative: Herbert Alan Dubin, 1320 Fenwick Lane, Silver Spring, MD 20910. To operate as a *common carrier*, by motor vehicle, in interstate or foreign commerce, over irregular routes, transporting (1) *malt beverages and empty used beverage containers for recycling* and (2) *materials and supplies* dealt in or used by breweries, between points in Jefferson County, CO, on the one hand, and, on the other, points in KS

and OK. (Hearing site: Washington, DC, or Denver, CO.)

MC 139495 (Sub-429F), filed March 5, 1979. Applicant: NATIONAL CARRIERS, INC., 1501 East 8th Street, P.O. Box 1358, Liberal, KS 67901. Representative: Herbert Alan Dubin, 1320 Fenwick Lane, Silver Spring, MD 20910. To operate as a *common carrier*, by motor vehicle, in interstate or foreign commerce, over irregular routes, transporting *dry beverage preparations, malt products, cocoa products, candy, and popcorn*, from the facilities of Ovaltine Products, Inc., at or near Villa Park, IL, to points in AZ, CA, CO, GA, KS, MA, MO, NJ, NY, OR, PA, TX, UT, WA, and WV. (Hearing site: Washington, DC.)

MC 141804 (Sub-226F), filed March 5, 1979. Applicant: WESTERN EXPRESS, DIVISION OF INTERSTATE RENTAL, INC., P.O. Box 3488, Ontario, CA 91761. Representative: Frederick J. Coffman (same address as applicant). To operate as a *common carrier*, by motor vehicle, in interstate or foreign commerce, over irregular routes, transporting *plastic pipe, plastic pipe fittings, and valves*, (a) from Cleveland, OH, to points in CA (except Sun Valley, Bakersfield, and Santa Ana), OR, and WA, and (b) from Sun Valley, Bakersfield, and Santa Ana, CA, to points in NM and TX. (Hearing site: Los Angeles or San Francisco, CA.)

MC 142364 (Sub-7F), filed March 1, 1979. Applicant: KENNETH SAGELY, d.b.a. SAGELY PRODUCE, 2802 Kibler Road, Van Buren, AR 72956. Representative: Don A. Smith, P.O. Box 43, 510 North Greenwood, Fort Smith, AR 72902. To operate as a *common carrier*, by motor vehicle, in interstate or foreign commerce, over irregular routes, transporting (1) *aluminum folding furniture and wood folding furniture and aluminum institutional furniture*, from the facilities of Tucker Duck and Rubber Company, at Fort Smith, AR, to points in AL, AZ, CA, CO, GA, IL, IN, IA, KS, KY, LA, MI, MN, MS, MO, NE, NV, NM, NC, ND, OH, OK, SC, SD, TN, TX, UT, and WI, and (2) *materials, equipment and supplies* (except commodities in bulk) used in the manufacture of the commodities in (1) above, in the reverse direction. (Hearing site: Fort Smith, AR, or Washington, DC.)

MC 143775 (Sub-70F), filed March 1, 1979. Applicant: PAUL YATES, INC., 6601 West Orangewood, Glendale, AZ 85301. Representative: Michael R. Burke (same address as applicant). To operate as a *common carrier*, by motor vehicle, in interstate or foreign commerce, over irregular routes, transporting *paper, in rolls, and paper bags*, from Orange, TX, to points in AR, CA, IL, MA, ME, MN, NJ, NY, PA, and DC. (Hearing site: Houston, TX, or Washington, DC.)

Note:—Dual operations may be involved.

MC 145625 (Sub-3F), filed March 14, 1979. Applicant: DUTCHLAND TRUCKING, INC., 1051 Center Ave., Oostburg, WI 53070. Representative: Richard A. Westley, 4506 Regent St., Suite 100, Madison, WI 53705. To operate as a *common carrier*, by motor vehicle, in interstate or foreign commerce, over irregular routes, transporting *cheese and cheese products*, from the facilities of Swift & Co. of Pauly Cheese, Div. at or near Green Bay, WI, to points in AR, LA, MO, NM, OK, and TX. (Hearing site: Milwaukee, or Madison, WI.)

MC 145664 (Sub-2F), filed March 5, 1979. Applicant: STALBERGER, INC., 223 South 50th Ave. West, Duluth, MN 55806. Representative: John M. LeFevre, 4610-IDS Center, Minneapolis, MN 55402. To operate as a *common carrier*, by motor vehicle, in interstate or foreign commerce, over irregular routes, transporting (1) *building materials and asbestos cement pipe*, from the facilities of Johns-Manville Sales Corporation, at or near Waukegan, IL, to points in Ashland, Barron, Bayfield, Buffalo, Burnett, Chippewa, Clark, Douglas, Dunn, Eau Claire, Iron, Jackson, LaCrosse, Monroe, Pepin, Pierce, Polk, Price, Rusk, Saint Croix, Sawyer, Taylor, Trempealeau, Vernon, and Washburn Counties, WI, MN, ND, and SD; (2) *insulation board*, from the facilities of Johns-Manville Perlite Corp., at or near Rockdale, IL, to the destination points in (1) above; and (3) *plastic pipe*, from the facilities of Johns-Manville Sales Corporation, at or near Wilton, IA, to the destination points in (1) above. (Hearing site: Duluth or Minneapolis, MN.)

MC146204(Sub-1F), filed March 14, 1979. Applicant: BRAYMAN'S AUTOMOTIVE SERVICE, INC., 877 South Washington St., North Attleboro, MA 02760. Representative: William Humphrey Tucker, One State St., Boston, MA 02109. To operate as a *common carrier*, by motor vehicle, in interstate of foreign commerce, over irregular routes, transporting *wrecked motor vehicle or disabled motor vehicles*, between those points in (1) Norfolk, County, MA, on and south of MA Hwy 128 and 3, (2) Bristol County, MA, on and north of MA Hwy 44, and (3) Plymouth County, MA, within a line (including points on such line) beginning at the Norfolk-Plymouth County line and extending along MA Hwy 18 to junction U.S. Hwy 44, then west along U.S. Hwy 44 to the Plymouth-Bristol County line, then north along the Plymouth-Bristol County line to the Plymouth-Norfolk County line to point of beginning, on the one hand, and, on the other, points in CT, ME, NH, NY, RI, and VT. (Hearing site: Boston, MA.)

MC146305(Sub-2F), filed March 1, 1979. Applicant: MOBILE PRE-MIX TRANSIT, INC., Box 5183 T.A., Denver, CO 80217. Representative: Truman A. Stockton, Jr., 1650 Grant St., Denver, CO 80203. To operate as a *contract carrier*, by motor vehicle, in interstate or foreign commerce, over irregular routes, transporting *concrete admixtures* (a) between points in CO, (b) between points in CO, on the one hand, and, on the other, points in CA and TX, and (c) between points in CA, CO, and TX, on the one hand, and, on the other, points in AZ, ID, KS, MT, NE, NM, OK, UT, and WY, under continuing contract(s) in (a), (b), and (c) above with Mobile Premix Concrete, Inc., of Denver, CO. (Hearing site: Denver, CO.)

MC146404(Sub-1F), filed March 5, 1979. Applicant: C & J TRUCKING, INC., 2055 South High St., Columbus, OH 43207. Representative: David A. Turano, 100 East Broad St., Columbus, OH 43215. To operate as a *common carrier*, by motor vehicle, in interstate or foreign commerce, over irregular routes, transporting (1) *iron and steel articles*, and (2) *materials, equipment, and supplies* used in the manufacture and distribution of iron and steel articles, (except commodities in bulk), between the facilities of Newark Steel Company, at or near Newark, OH, on the one hand, and, on the other, points in IL, IN, KY, SC, TN, VA, and WV. (Hearing site: Columbus, OH.)

[FR Doc. 79-20779 Filed 7-5-79; 8:45 am]
BILLING CODE 7035-01-M

[Volume No. 80]

Permanent Authority Decisions; Decision-Notice

Decided: June 11, 1979.

The following applications filed on or before February 28, 1979, are governed by Special Rule 247 of the Commission's *Rules of Practice* (49 CFR 1100.247). For applications filed before March 1, 1979, these rules provide, among other things, that a protest to the granting of an application must be filed with the Commission within 30 days after the date notice of the application is published in the **Federal Register**. Failure to file a protest, within 30 days, will be considered as a waiver of opposition to the application. A protest

under these rules should comply with Rule 247(e)(3) of the Rules of Practice which requires that it set forth specifically the grounds upon which it is made, contain a detailed statement of protestant's interest in the proceeding, (as specifically noted below), and shall specify with particularity the facts, matters, and things relied upon, but shall not include issues or allegations phrased generally. A protestant should include a copy of the specific portions of its authority which protestant believes to be in conflict with that sought in the application, and describe in detail the method—whether by joinder, interline, or other means—by which protestant would use such authority to provide all or part of the service proposed.

Protests not in reasonable compliance with the requirements of the rules may be rejected. The original and one copy of the protest shall be filed wiht the Commission, and a copy shall be served concurrently upon applicant's representative, or upon applicant if no representative is named. If the protest includes a request for oral hearing, such request shall meet the requirements of section 247(e)(4) of the special rules and shall include the certification required in that section.

On cases filed on or after March 1, 1979, petitions for intervention either with or without leave are appropriate.

Section 247(f) provides, in part, that an applicant which does not intend timely to prosecute its application shall promptly request that it be dismissed, and that failure to prosecute an application under the procedures of the Commission will result in its dismissal.

If applicant has introduced rates as an issue it is noted. Upon request an applicant must provide a copy of the tentative rate schedule to any protestant.

Further processing steps will be by Commission notice, decision, or letter which will be served on each party of record. *Broadening amendments will not be accepted after the date of this publication.*

Any authority granted may reflect administratively acceptable restrictive amendments to the service proposed below. Some of the applications may have been modified to conform to the Commission's policy of simplifying grants of operating authority.

Findings

With the exceptions of those applications involving duly noted problems (e.g., unresolved common control, unresolved fitness questions, and jurisdictional problems) we find, preliminarily, that each common carrier applicant has demonstrated that its proposed service is required by the public convenience and necessity, and that each contract carrier applicant qualifies as a contract carrier and its proposed contract carrier service will be consistent with the public interest and the transportation policy of 49 U.S.C. 10101. Each applicant is fit, willing, and able properly to perform the service proposed and to conform to the requirements of Title 49, Subtitle IV, United States Code, and the Commission's regulations. Except where specifically noted this decision is neither a major Federal action significantly affecting the quality of the human environment nor a major regulatory action under the Energy Policy and Conservation Act of 1975.

In those proceedings containing a statement or note that dual operations are or may be involved we find, preliminarily and in the absence of the issue being raised by a protestant, that the proposed dual operations are consistent with the public interest and the transportation policy of 49 U.S.C. 10101 subject to the right of the Commission, which is expressly reserved, to impose such conditions as it finds necessary to insure that applicant's operations shall conform to the provisions of 49 U.S.C. 10930(a) [formerly section 210 of the Interstate Commerce Act].

In the absence of legally sufficient protests, filed within 30 days of publication of this decision-notice (or, if the application later becomes unopposed), appropriate authority will be issued to each applicant (except those with duly noted problems) upon compliance with certain requirements which will be set forth in a notification of effectiveness of this decision-notice. To the extent that the authority sought below may duplicate an applicant's existing authority, such duplication shall not be construed as conferring more than a single operating right.

Applicants must comply with all specific conditions set forth in the grant or grants of authority within 90 days after the service of the notification of the effectiveness of this decision-notice, or the application of a non-complying applicant shall stand denied.

By the Commission, Review Board, Members Boyle, Eaton, and Liberman.

H. G. Homme, Jr.,
Secretary.

MC 16536 (Sub-6F), filed February 28, 1979. Applicant: STANDARD FORWARDING CO., INC., 2925 Morton Drive, East Moline, IL 61244. Representative: James C. Hardman, 33 N. LaSalle St., Chicago, IL 60602. To operate as a *contract carrier*, by motor vehicle, in interstate or foreign commerce, over irregular routes, transporting *such commodities* as are dealt in or used by manufacturers and dealers of agricultural equipment, industrial equipment, and lawn care and leisure products, (except commodities in bulk), between points in Dodge County, WI, Black Hawk, Dubuque, Polk, Scott, and Wapello Counties, IA, and Rock Island, IL, on the one hand, and, on the other, points in WI, IL, and IA, under continuing contract(s) with Deere & Company of Moline, IL. (Hearing site: Chicago, IL.)

MC 26396 (Sub-217F), filed November 28, 1978, and previously noticed in the Federal Register issue of March 1, 1979. Applicant: POPELKA TRUCKING CO., INC., d/b/a THE WAGGONERS, P.O. Box 990, Livingston, MT 59047. Representative: Bradford E. Kistler, P.O. Box 82028, Lincoln, NE 68501. To operate as a *common carrier*, by motor vehicle, in interstate or foreign commerce, over irregular routes, transporting *lumber and wood products*, from points on the International Boundary line between the United States and Canada in MN, ND, MT, ID, and WA, to points in AR, CO, ID, IL, IA, IN, KY, KS, LA, MI, MN, MO, MT, NE, NM, ND, OH, OK, SD, TN, TX, UT, WI, and WY. (Hearing site: Billings, MT.)

Note.—This republication is to include IN, LA, MT, and NM, as distination States.

MC 26396 (Sub-227F), filed February 26, 1979. Applicant: POPELKA TRUCKING CO., INC., d/b/a THE WAGGONERS, P.O. Box 990, Livingston, MT 59047. Representative: Bradford E. Kistler, P.O. Box 82028, Lincoln, NE 68501. To operate as a *common carrier*, by motor vehicle, in interstate or foreign commerce, over irregular routes, transporting *lumber*, from points in AR, OK and TX, to points in OK, KS, NE, SD, ND, CO, WY, MT, ID, WA, and OR, points in IA on and west of U.S. Highway 169, and points in MN located in and north of Clay, Becker, Hubbard, Cass, Itasca, and Koochiching Counties, restricted to transportation of traffic originating at the named origins and distined to the indicated distinations. (Hearing site: Billings, MT.)

MC 69116 (Sub-222F), filed February 26, 1979. Applicant: SPECTOR INDUSTRIES, INC., d/b/a SPECTOR FREIGHT SYSTEM, 1050 Kingery Highway, Bensenville, IL 60106. Representative: Donald B. Levine, 39 South LaSalle St., Chicago, IL 60603. To operate as a *common carrier*, by motor

vehicle, in interstate or foreign commerce, over irregular routes, transporting *general commodities,* (except those of unusual value, Classes A and B explosives, household goods as defined by the Commission, commodities in bulk and those requiring special equipment) serving the facilities of John H. Harland Company at or near St. Peters, MO, as an off-route point in connection with the carrier's presently authorized regular-route operations. (Hearing site: Chicago, IL.)

MC 98327 (Sub-31F), filed August 28, 1978, and previously noticed in the Federal Register issue of November 14, 1978. Applicant: SYSTEM 99, a corporation, 8201 Edgewater Drive, Oakland, CA 94621. Representative: Michael J. O'Neill (same address as applicant). To operate as a *common carrier,* by motor vehicle, in interstate or foreign commerce, over regular routes, transporting *general commodities* (except those of unusual value, classes A and B explosives, household goods as defined by the Commission, commodities in bulk, and those requiring special equipment), (1) between Arcata, CA, and junction Interstate Hwy 5 and OR Hwy 58 near Eugene, OR; from Arcata over U.S. Hwy 101 to junction U.S. Hwy 199, then over U.S. Hwy 199 to junction OR Hwy 99, then over OR Hwy 99 to junction Interstate Hwy 5, then over Interstate Hwy 5 to junction OR Hwy 58, and return over the same route, and (2) between Portland, OR, and Eugene, OR, over Interstate Hwy 5, serving no intermediate points in (1) and (2) above, and serving the termini in (1) and (2) for purposes of joinder only. (Hearing site: San Francisco, CA, or Portland, CA.)

Note.—This republication is to include part (2) of the territorial description.

MC 109847 (Sub-28F), filed February 12, 1979. Applicant: BOSS-LINCO LINES, INC., 3909 Genesee Street, Cheektowaga, NY 14225. Representative: Harold G. Hernly, Jr., 110 South Columbus Street, Alexandria, VA 22314. To operate as a *common carrier,* by motor vehicle, in interstate or foreign commerce, over regular routes, transporting *general commodities* (except those of unusual value, classes A and B explosives, household goods as defined by the Commission, commodities in bulk, and those requiring special equipment), (1) between Marietta, OH, and Washington, DC; from Marietta, over Interstate Hwy 55 to junction U.S. Hwy 50, then over U.S. Hwy 50 to Washington, and return over the same route, serving all intermediate points in WV, and serving junction Interstate Hwy 81 and U.S. Hwy 50 at Winchester, VA, for purposes of joinder only, (2) between junction Interstate Hwy 81 and U.S. Hwy 50 at Winchester, VA, and Baltimore, MD; from junction Interstate Hwy 81 U.S. Hwy 50, over VA Hwy 7 to junction U.S. Hwy 340, then over U.S. Hwy 340 to junction U.S. Hwy 15, then over U.S. Hwy 15 to junction Interstate Hwy 70N at Frederick, MD, then over Interstate Hwy 70N to Baltimore, and return over the same route, (2) between Pittsburgh, PA, and Philadelphia, PA; from Pittsburgh over U.S. Hwy 22 to junction Interstate Hwy 76, then over Interstate 76 to Philadelphia, and return over the same route, serving junction Interstate Hwys 76 and 70 at Breezewood, PA, and junction Interstate Hwys 76 and 81 for purposes of joinder only, (4) between junction Interstate Hwys 76 and 70 at Breezewood, PA, and Baltimore, MD; from junction Interstate Hwys 76 and 70 over Interstate Hwy 70 to Frederick, MD, then over Interstate Hwy 70N to Baltimore, and return over the same route, (5) between junction Interstate Hwys 76 and 70 at Breezewood, PA, and Washington, DC; from junction Interstate Hwys 76 and 70 at Breezewood over Interstate Hwy 70 to Frederick, MD, then over Interstate Hwy 70S to junction Interstate Hwy 495, then over Interstate Hwy 495 to junction U.S. Hwy 1, then over U.S. Hwy 1 to Washington, and return over the same route, and (6) between junction U.S. Hwy 50 and Interstate Hwy 81 at Winchester, VA, and Newark, NJ, from junction U.S. Hwy 50 and Interstate Hwy 81 over Interstate Hwy 81 to junction Interstate Hwy 78 at or near Hamlin, PA, then over Interstate Hwy 78 to Elizabeth, NJ, then over U.S. Hwy 22 to Newark, and return over the same route, serving the intermediate points of Allentown, Bethlehem, and Easton, PA, and serving junction Interstate Hwys 81 and 76 at Harrisburg, PA, for the purpose of joinder only. Conditions: (1) The regular route authority granted here shall not be severable, by sale or otherwise, from applicant's retained irregular route authority in certificate No-MC-109847 (Sub-No. 25) (2) Applicant must request, in writing, the imposition of restrictions in its irregular route authority in certificate No. MC-109847 (Sub-No. 25) precluding service between any two points authorized to be served here pursuant to regular route authority. (Hearing site: Pittsburgh or Philadelphia, PA.)

Note.—(1) The purpose of this application is to convert a portion of applicant's existing irregular route authority in certificate No. MC-109847 c Sub-No., 25 to regular route authority.

MC 115496 (Sub-115F), filed February 7, 1979. Applicant: LUMBER TRANSPORT, INC., P.O. Box 111, Cochran, GA 31014. Representative: Virgil H. Smith, Suite 12, 1587 Phoenix Boulevard, Atlanta, GA 30349. To operate as a *common carrier,* by motor vehicle, in interstate or foreign commerce, over irregular routes, transporting *lumber, composition wood, particleboard, and roofing,* (1) from points in GA, to points in IL, IN, LA, MD, MS, NC, OH, PA, VA, and WV, (2) from points in FL, to points in AL, GA, IL, IN, KY, LA, MD, MS, NC, OH, PA, SC, TN, VA, and WV, (3) from points in AL, to points in FL, IL, IN, KY, LA, MD, MS, NC, OH, PA, TN, VA, and WV, (4) from points in SC, to points in AL, FL, GA, IL, IN, KY, LA, MD, MS, NC, OH, PA, TN, VA, and WV, (5) from points in NC, to points in AL, FL, GA, IL, IN, KY, LA, MD, MS, OH, PA, SC, TN, VA, and WV, (6) from points in VA, to points in AL, FL, GA, IL, IN, KY, LA, MD, MS, NC, OH, PA, SC, TN, and WV, (7) from points in TN, to points in AL, FL, GA, IL, IN, LA, MD, MS, NC, OH, PA, SC, VA, WV, and KY, (8) from points in KY, to points in AL, FL, GA, IL, IN, LA, MD, MS, NC, OH, PA, SC, TN, VA, and WV, and (9) from points in MS, to points in AL, FL, GA, IL, IN, KY, LA, MD, NC, OH, PA, SC, TN, VA, and WV. (Hearing site: Atlanta, GA.)

MC 115826 (Sub-399F), filed February 12, 1979. Applicant: W. J. DIGBY, INC., 6015 East 58th Ave., Commerce City, CO 80022. Representative: Howard Gore (same address as applicant). To operate as a *common carrier,* by motor vehicle, in interstate or foreign commerce, over irregular routes, transporting *general commodities* (except those of unusual value, classs A and B explosives, household goods as defined by the Commission, commodities in bulk, and those requiring special equipment), (1) from Detroit, MI, to Dallas and Houston, TX, New York, NY, Boston and Worcester, MA, Philadelphia, PA, Denver, CO, Omaha, NE, Minneapolis, MN, Portland, OR, Seattle, WA, Los Angeles and San Francisco, CA, Phoenix, AZ, Atlanta, GA, and Charlotte, NC; and (2) from New York, NY and Philadelphia, PA, to Detroit, MI, restricted in (1) and (2) above to the transportation of traffic originating at and destined to the facilities used by Southeastern Michigan Shipper's Cooperative at the above named point. (Hearing site: Denver, CO.)

MC 121517 (Sub-5F), filed February 22, 1979. Applicant: ELLSWORTH MOTOR

FREIGHT LINES, INC., P.O. Box 15627, Tulsa, OK 74112. Representative: Wilburn L. Williamson, Suite 615—East, The Oil Center, 2601 Northwest Expressway, Oklahoma City, OK 73112. To operate as a *common carrier*, by motor vehicle, in interstate or foreign commerce, over irregular routes, transporting *fuel oil*, in bulk, in tank vehicles, from Fort Worth, TX, to Muskogee, OK. (Hearing site: Tulsa, OK.)

MC 123476 (Sub-39F), filed January 25, 1979. Applicant: CURTIS TRANSPORT, INC., P.O. Box 388, Arnold, MO 63010. Representative: David G. Dimit (same address as applicant). To operate as a *common carrier*, by motor vehicle, in interstate or foreign commerce, over irregular routes, transporting (1) *plastic articles* (except commodities in bulk), and (2) *Materials, equipment*, and *supplies* used in the manufacture and distribution of plastic articles (except commodities in bulk), between the facilities of the Mobil Chemical Company at points in the United States (except AK and HI), on the one hand, and, on the other, those points in the United States on and east of U.S Hwy 85, restricted to the transportation of traffic originating at or destined to the facilities of the Mobil Chemical Company. (Hearing site: St. Louis, MO, or Chicago, IL.)

MC 131167 (Sub-7F), filed Februry 6, 1979. Applicant: LANGDON TRANSPORTATION, INC., 5202 Industry Avenue, Pico Rivera, CA 90660. Representative: Milton W. Flack, 4311 Wilshire blvd., Suite 300, Los Angeles, CA 90010. To operate as a *common carrier*, by motor vehicle, in interstate or foreign commerce, over irregular routes, transporting *such commodities* as are dealt in by retail drug and department stores (except commodities in bulk, and those requiring special equipment), from points in the United States (except AK and HI), to Anaheim, Los Angeles, and San Leandro, CA, and Sparks, NV, under continuing contract(s) with Thrifty Corporation of Los Angeles, CA. (Hearing site: Los Angeles, CA.)

MC 138157 (Sub-116F), filed February 21, 1979. Applicant: SOUTHWEST EQUIPMENT RENTAL, INC., d.b.a. SOUTHWEST MOTOR FREIGHT, P.O. Box 9596, Chattanooga, TN 37412. Representative: Patrick E. Quinn (same address as applicant). To operate as a *common carrier*, by motor vehicle, in interstate or foreign commerce, over irregular routes, transporting *wheels and parts* for wheels, from Huntington Beach, CA, to those points in the United States in and east of ND, SD, NE, KS, OK, and TX. (Hearing site: Los Angeles, CA.)

Note.—Dual operations may be involved.

MC 143117 (Sub-9F), filed February 5, 1979. Applicant: SAV-ON TRANSPORTATION, INC., 143 Frontage Road, Manchester, NH 03108. Representative: John A. Sykas (same address as applicant). To operate as a *contract carrier*, by motor vehicle, in interstate or foreign commerce, over irregular routes, transporting *cereal, plastic articles, lunch and picnic kits, napkins, salt, pepper, sugar, condiments, and straws*, (except commodities in bulk), from the facilities of Van Brode Milling Co., Inc., at or near (a) Clinton, MA, and (b) Kobuta, PA, to points in AL, AR, CO, FL, IL, IA, KS, MI, MN, MS, IN, MO, NE, ND, OK, SD, WV, TX, AZ, and WI, under continuing contract(s) with Van Brode Milling Co., Inc. of Clinton, MA. (Hearing site: Concord, NH, or Boston, MA.)

Note.—Dual operations may be involved.

MC 144846 (Sub-6F), filed February 7, 1979. Applicant: TRANSTATES, INC., 3216 East Westminister, Santa Ana, CA 92703. Representative: Patricia M. Schnegg, 1800 United California Bank Building, 707 Wilshire Boulevard, Los Angeles, CA 90017. To operate as a *common carrier*, by motor vehicle, in interstate or foreign commerce, over irregular routes, transporting *materials, equipment, and supplies* used in the manufacture of transformers, from points in Cowlitz County, WA, to Jefferson City, MO, and Abingdon, VA. (Hearing site: Los Angeles, CA.)

Note.—Dual operations may be involved.

MC 145406 (Sub-17F), filed February 8, 1979. Applicant: MIDWEST EXPRESS, INC., 380 E. Fourth Street, Dubuque, IA 52001. Representative: Richard A. Westley, 4506 Regent Street, Suite 100, Madison, WI 53705. To operate as a *common carrier*, by motor vehicle, in interstate or foreign commerce, over irregular routes, transporting *bacon*, (1) between the facilities of Sugar Creek Packing Co., at or near (a) Bloomington, IL, and (b) Washington Court House, and Dayton, OH, (2) from the facilities in (1) above, to points in WA, OR, NM, AZ, CA, and CO. (Hearing site: Milwaukee, WI, or Chicago, IL.)

MC 145437 (Sub-1F), filed Februry 12, 1979. Applicant: JWI TRUCKING, INC., 8100 North Teutonia Avenue, Milwaukee, WI 53209. Representative: Michael J. Wyngaard, 150 East Gilman Street, Madison, WI 53703. To operate as a *contract carrier* by motor vehicle, in interstate or foreign commerce, over irregular routes, transporting (1) *wearing apparel*, and (2) *materials, equipment*, and *supplies* used in the manufacture and distribution of wearing apparel, between Virginia and, Eveleth, MN on the one hand, and, on the other, points in the United States (except AK and HI), under continuing contract(s) with Jack Winter Apparel, Inc., and Mary Lester Fashion Fabrics, Inc., both of Milwaukee, WI. (Hearing site: Milwaukee, WI, or Chicago, IL.)

MC 146407F, filed February 22, 1979. Applicant: KING CARRIAGE CO., a corporation, 3710 Floral Avenue, Cincinnati, OH 45207. Representative: James W. Muldoon, 50 West Broad Street, Columbus, OH 43215. To operate as a *common carrier*, by motor vehicle, in interstate or foreign commerce, over irregular routes, transporting *such commodities* as are dealt in or used by manufacturers, converters, and distributors of paper and paper products, between the facilities of Duro paper Bag Manufacturing Co., at (a) Ludlow, Erlanger, and Covington, KY, (b) Brownsville, TX, and (c) Hudson, WI, on the one hand, and, on the other, points in the United States (except AK and HI). (Hearing site: Columbus, OH, or Washington, DC.)

MC 146426 (Sub-1F), filed February 26, 1979. Applicant: G P TRANSFER, INC., 3440 W. Hospital Avenue, Chamblee, GA 30341. Representative: Virgil H. Smith, Suite 12, 1587 Phoenix Blvd., Atlanta, GA 30349. To operate as a *contract carrier*, by motor vehicle, in interstate or foreign commerce, over irregular routes, transporting (1) *new furniture*, from the facilities of S. K. Products Corporation at or near Atlanta, GA, to points in FL, GA, AL, NC, SC, TN, KY, VA, WV, OH, and MO, and (2) *materials, equipment and supplies* used in the manufacture and distribution of new furniture, from the destinations in (1) above to the origin facilities in (1) above, under continuing contract(s) in both (1) and (2) above with S. K. Products Corporation of Atlanta, GA. (Hearing site: Atlanta, GA.)

MC 146446F, filed February 16, 1979. Applicant: CMS DELIVERY, INC., 600 Montague Avenue, San Leandro, CA 94577. Representative: Edward J. Hagerty, 100 Bush Street, San Francisco, CA 94104. To operate as a *common carrier*, by motor vehicle, in interstate or foreign commerce, over irregular routes, transporting *general commodities* (except those of unusual value, classes A and B explosives, household goods as defined by the Commission, commodities in bulk, and those requiring special equipment), (1) between the facilities of CMS Delivery, Inc., at San

Leandro, CA, on the one hand, and, on the other, points on and bounded by a line beginning at Fort Bragg, CA, and extending along CA Hwy 1 to Carmel, CA, then along CA Hwys 1 and 68 to junction CA Hwys 68 and 183 and U.S. Hwy 101, then along U.S. Hwy 101 to junction CA Hwy 166, then along CA Hwy 166 to junction CA Hwy 99, then along CA Hwy 99 to junction CA Hwy 65, then along CA Hwy 65 to junction CA Hwy 198, then along CA Hwy 198 to junction CA Hwy 245, then along CA Hwy 245 to junction CA Hwy 180, then along CA Hwy 180 to junction Clovis Avenue, then along Clovis Avenue to Herndon Ave, then along Herndon Avenue to junction CA Hwy 41, then along CA Hwy 41 to junction CA Hwy 49, then along CA Hwy 49 to junction Interstate Hwy 50, then along Interstate Hwy 50 to junction CA Hwy 89, then along CA Hwy 89 to junction Interstate Hwy 80, then along Interstate Hwy 80 to Truckee, CA, then along Interstate Hwy 80 to junction CA Hwy 49, then along CA Hwy 49 to junction CA Hwy 20, then along CA Hwy 20 to junction CA Hwy 70, then along CA Hwy 70 to junction CA Hwy 149, then along CA Hwy 149 to junction CA Hwy 99, then along CA Hwy 99 to junction Interstate Hwy 5, then along Interstate Hwy 5 to junction CA Hwy 273; then along CA Hwy 273 to junction Interstate Hwy 5, then along Interstate Hwy 5 to junction CA Hwy 20, then along CA Hwy 20 to junction CA Hwy 1, and (2) between the facilities of CMS Delivery, Inc., at or near Los Angeles, CA, on the one hand, and on the other, points on and bounded by a line beginning at Morre Bay, CA, then along CA Hwy 1 to junction Interstate Hwy 5, then along Interstate Hwy 5 to the international boundary line between the United States and Mexico, then along the international boundary line CA Hwy 111, then along CA Hwy 111 to junction CA Hwy 98, then along CA Hwy 98 to junction Interstate Hwy 8, then along Interstate Hwy 8 to junction CA Hwy 115, then along CA Hwy 115 to junction CA Hwy 78, then along CA Hwy 78 to junction CA Hwy 86, then along CA Hwy 86 to junction Interstate Hwy 10, then along Interstate Hwy 10 to junction Interstate Hwy 15E, then along Interstate Hwy 15E to junction Interstate Hwy 15, then along Interstate Hwy 15 to junction CA Hwy 58, then along CA Hwy 58 to junction Interstate Hwy 395, then along Interstate Hwy 395 to junction CA Hwy 178, then along CA Hwy 178 to Ridgecrest, then along CA Hwy 178 to junction CA Hwy 395, then along CA Hwy 395 to junction CA Hwy 58, then along CA Hwy 58 to junction CA Hwy 99, then along CA Hwy 99 to junction CA Hwy 46, then along CA Hwy 46 to junction Interstate Hwy 101, then along Interstate Hwy 101 to junction CA Hwy 41, then along CA Hwy 41 to junction CA Hwy 101. (Hearing site: San Francisco, CA.)

MC 146486F, filed February 15, 1979. Applicant: GARY HARTMAN D., d.b.a., FOREST PRODUCTS TRANSPORTATION, Plant and Taylor Streets, Ukiah, CA 95482. Representative: Susan W. Carlson, 1215 Norton Bldg., Seattle, WA 98104. To operate as a *common carrier*, by motor vehicle, in interstate or foreign commerce, over irregular routes, transporting *lumber and lumber mill products*, between those points in OR west of U.S. Hwy 97, and those points in CA in and north of Monterey, Kings, Tulare and Inyo Counties, CA, and NV. (Hearing site: San Francisco, or Sacramento, CA.)

[FR Doc. 79-20781 Filed 7-5-79; 8:45 am]
BILLING CODE 7035-01-M

[Volume No. 58]

Permanent Authority Decisions; Decision-Notice

Decided: May 17, 1979.

The following applications filed on or before February 28, 1979, are governed by Special Rule 247 of the Commission's *Rules of Practice* (49 CFR 1100.247). For applications filed before March 1, 1979, these rules provide, among other things, that a protest to the granting of an application must be filed with the Commission within 30 days after the date of notice of the application is published in the Federal Register. Failure to file a protest, within 30 days, will be considered as a waiver of opposition to the application. A protest under these rules should comply with Rule 247(e)(3) of the Rules of Practice which requires that it set forth specifically the grounds upon which it is made, contain a detailed statement of protestant's interest in the proceeding (as specifically noted below), and shall specify with particularity the facts, matters, and things relied upon, but shall not include issues or allegations phrased generally. A protestant should include a copy of the specific portions of its authority which protestant believes to be in conflict with that sought in the application, and describe in detail the method—whether by joinder, interline, or other means—by which protestant would use such authority to provide all or part of the service proposed. Protests not in reasonable compliance with the requirements of the rules may be rejected. The original and one copy of the protest shall be filed with the Commission, and a copy shall be served concurrently upon applicant's representative, or upon applicant if no representative is named. If the protest includes a request for oral hearing, such request shall meet the requirements of section 247(e)(4) of the special rules and shall include the certification required in that section.

On cases filed on or after March 1, 1979, petitions for intervention either with or without leave are appropriate.

Section 247(f) provides, in part, that an applicant which does not intend timely to prosecute its application shall promptly request that it be dismissed, and that failure to prosecute an application under the procedures of the Commission will result in its dismissal.

If the applicant has introduced rates as an issue it is noted. Upon request an applicant must provide a copy of the tentative rate schedule to any protestant.

Further proceeding steps will be by the Commission notice, decision, or letter which will be served on each party of record. *Broadening amendments will not be accepted after the date of this publication.*

Any authority granted may reflect administratively acceptable restrictive amendments to the service proposed below. Some of the applications may have been modified to conform to the Commission's policy of simplifying grants of operating authority.

Findings

With the exceptions of those applications involving duly noted problems (e.g., unresolved common control, unresolved fitness questions, and jurisdictional problems) we find, preliminarily, that each common carrier applicant has demonstrated that its proposed service is required by the public convenience and necessity, and that each contract carrier applicant qualifies as a contract carrier and its proposed contract carrier service will be consistent with the public interest and the transportation policy of 49 U.S.C. 10101. Each applicant is fit, willing, and able properly to perform the service proposed and to conform to the requirements of Title 49, Subtitle IV, United States Code, and the Commission's regulations. Except where specifically noted this decision is neither a major Federal action significantly affecting the quality of the human environment nor a major regulatory action under the Energy Policy and Conservation Act of 1975.

In those proceedings containing a statement or note that dual operations are or may be involved we find, preliminarily and in the absence of the issue being raised by a protestant, that the proposed dual operations are consistent with the public interest and the transportation policy of 49 U.S.C. 10101 subject to the right of the Commission, which is expressly reserved, to impose such conditions as it finds necessary to insure that applicant's operations shall conform to the provisions of 49 U.S.C. 10930(a) [formerly section 210 of the Interstate Commerce Act].

In the absence of legally sufficient protests, filed on or before August 6, 1979, (or, if the application later became unopposed), appropriate authority will be issued to each applicant (except those with duly noted problems) upon compliance with certain requirements which will be set forth in a notification of effectiveness of this decision-notice. To the extent that the authority sought below may duplicate an applicant's existing authority, such duplication shall not be construed as conferring more than a single operating right.

Applicants must comply with all specific conditions set forth in the grants or grants of authority within 90 days after the service of the notification of the effectiveness of this decision-notice, or the application of a non-complying applicant shall stand denied.

By the Commission, Review Board Number 3, Members Parker, Fortier and Hill.

H. G. Homme, Jr.,

Secretary.

MC 200 (Sub-333F), filed February 13, 1979. Applicant: RISS INTERNATIONAL CORPORATION, 903 Grand Avenue, Kansas City, MO 64106. Representative: Ivan E. Moody (same address as applicant). To operate as a *common carrier*, by motor vehicle, in interstate or foreign commerce, over regular routes, transporting *printed matter, and materials and supplies* used in the production of printed matter (except commodities in bulk), serving the facilities of Wisconsin Cuneo Press at Milwaukee, WI, as an off-route point in connection with carrier's otherwise authorized regular route operations. (Hearing site: Kansas City, MO.)

MC 200 (Sub-335F), filed February 12, 1979. Applicant: RISS INTERNATIONAL CORPORATION, 903 Grand Avenue, Kansas City, MO 64106. Representative: Ivan E. Moody (same address as applicant). To operate as a *common carrier*, by motor vehicle, in interstate or foreign commerce, over irregular routes, transporting (1) *metal containers*, from Wayne, NJ, and Baltimore, MD, to Holland, St. Joseph, Benton Harbor, and Shoreham, MI; and (2) *pallets, packing materials, and dunnage*, from Holland, St. Joseph, Benton Harbor, Shoreham, and Detroit, MI, Columbus and Worthington, OH, and Indianapolis, IN, to Wayne, NJ, Baltimore, MD, and points in IL, IN, WI, MI, and OH, restricted to the transportation of traffic destined to the facilities of The Continental Group, Inc., at the named points. (Hearing site: Kansas City, MO.)

MC 200 (Sub-337F), filed February 23, 1979. Applicant: RISS INTERNATIONAL CORPORATION, 903 Grand Avenue, Kansas City, MO 64106. Representative: Ivan E. Moody (same address as applicant). To operate as a *common carrier*, by motor vehicle, in interstate or foreign commerce, over irregular routes, transporting *catalogs, magazines, and printed paper, and supplies and materials* used in the production and distribution of catalogs, magazines, and printed paper, (except commodities in bulk), between Glasgow, KY, and Gallatin, TN, on the one hand, and, on the other, points in CO, WY, NE, KS, OK, TX, AR, MO, IA, WI, IL, MI, IN, OH, WV, VA, PA, NY, NJ, MA, RI, ME, VT, NH, MD, DE, and DC. (Hearing site: Kansas City, MO.)

MC 531 (Sub-375F), filed February 22, 1979. Applicant: YOUNGER BROTHERS, INC., 4904 Griggs Road, P.O. Box 14048, Houston, TX 77021. Representative: Wray E. Hughes (same address as applicant). To operate as a *common carrier*, by motor vehicle, in interstate or foreign commerce, over regular routes, transporting (1) *vegetable oils*, in bulk, from points in NJ, NY, and PA to points in CA and OR; and (2) *vegetable oils, fatty acids, fractionated methyl esters, fractionated coconut and castor oils*, in bulk, in tank vehicles, from Berkeley, Los Angeles, Santa Fe Springs, and San Francisco, CA, to points in FL, GA, IL, LA, MA, MI, MN, MO, NJ, NY, PA, OH, TN, TX, and RI. (Hearing site: San Francisco, CA.)

MC 730 (Sub-431F), filed February 22, 1979. Applicant: PACIFIC INTERMOUNTAIN EXPRESS CO., a corporation, 25 North Via Monte, Walnut Creek, CA 94598. Representative: A. G. Krebs (same address as applicant). To operate as a *common carrier*, by motor vehicle, in interstate or foreign commerce, over irregular routes, transporting *general commodities* (except those of unusual value, classes A and B explosives, household goods as defined by the Commission, commodities in bulk, and those requiring special equipment), Between Tucson, AZ, and St. Louis, MO: From Tucson, AZ over Interstate Hwy 10 to junction Interstate Hwy 20, then over Interstate Hwy 20 to junction U.S. Hwy 67, then over U.S. Hwy 67 to junction Interstate Hwy 30, than over Interstate Hwy 30 to junction U.S. Hwy 167 with U.S. Hwy 67, then over U.S. Hwy 67 to St. Louis, MO, and return over the same route, as an alternate route for operating convenience only, in connection with carrier's regular-route operations, serving no intermediate points, with service at junction U.S. Hwy 54 and Interstate Hwy 10, and junction U.S. Hwy 67 and Interstate Hwy 20 for purpose of joinder only. (Hearing site: Washington, DC, or San Francisco, CA.)

MC 730 (Sub-433F), filed February 26, 1979. Applicant: PACIFIC INTERMOUNTAIN EXPRESS CO., a corporation, 25 No. Via Monte, Walnut Creek, CA 94596. Representative: E. E. Reddick (same as address as applicant). To operate as a *common carrier*, by motor vehicle, in interstate or foreign commerce, over irregular routes, transporting *iron or steel railway or locomotive wheels*, serving the facilities of Griffin Wheel Company, at Kiokuk, IA, as as an off-route point in connection with carrier's otherwise authorized regular route operations. (Hearing site: Des Moines, IA, or San Francisco, CA.)

MC 2060 (Sub-14F), filed February 2, 1979. Applicant: PINE HILL-KINGSTON BUS CORPORATION, 18 Pine Grove Avenue, Post Office Box 1758, Kingston, NY 12401. Representative: Bruce E. Mitchell, Fifth Floor, Lenox Towers South, 3390 Peachtree Road, Atlanta, GA 30326. To operate as a *common carrier*, by motor vehicle, in interstate or foreign commerce, over irregular routes, transporting (1) *passengers and their baggage*, and *express and newspapers* in the same vehicle with passengers, between Kingston, NY, and New York, NY: From Kingston, NY, over U.S. Hwy 9W to Newburg, NY, then over NY Hwy 32 to junction NY Hwy 17, then over NY Hwy 17 to Harriman, NY, to the NY-NJ State line, (also from Kingston, NY over NY State Thruway to Suffern, NY, then over NY Hwy 17 to the NY-NJ State line), then over NJ Hwy 17 to junction NJ Hwy 3, then over NJ Hwy 3 to junction depressed highway leading to the Lincoln Tunnel, then over depressed highway and along the Lincoln Tunnel to New York, NY, and return over the same route, serving intermediate points in NJ only restricted against the transportation of passengers, express, and newspapers whose entire

journey begins at New York, NY, and ends at any points in NJ, or vice versa; and (2) *passengers and their baggage, and express and newspapers* in the same vehicle with passengers. Between junction NY Hwy 17 and Interstate Hwy 87 at or near Exit 15 of Interstate Hwy 87, and junction Interstate Hwy 95 and NJ Hwy 3 at or near Exit 17 of Interstate Hwy 95: From junction NY Hwy 17 and Interstate Hwy 87 over Interstate Hwy 87 to junction Garden State Parkway, at or near Exit 14A of Interstate Hwy 87, then over Garden State Parkway to junction Interstate Hwy 80, then over Interstate Hwy 80 to junction Interstate Hwy 95, then over Interstate Hwy 95 to junction NJ Hwy 3, and return over the same route, in connection with carrier's otherwise authorized regular-route operations, serving no intermediate points, and serving junction NY Hwy 17 and Interstate Hwy 87 and junction Interstate Hwy 95 and NJ Hwy 3 for purposes of joinder only. (Hearing site: New York, NY.)

MC 2860 (Sub-175F), filed February 26, 1979. Applicant: NATIONAL FREIGHT, INC., 71 West Park Ave., Vineland, NJ 08360. Representative: Albert A. Andrin, 180 North La Salle St., Chicago, IL 60601. To operate as a *common carrier*, by motor vehicle, in interstate or foreign commerce, over irregular routes, transporting *food stuffs* (except commodities in bulk), from points in WI to points in AL, AZ, AR, CO, CT, DE, FL, GA, IA, IL, IN, KS, KY, LA, MA, MD, MI, MN, MO, MS, NC, NE, NH, NJ, NY, OH, OK, PA, RI, SC, TN, TX, VA, VT, WA, WV, and DC, restricted to the transportation of traffic originating at the facilities of The Larsen Company. (Hearing site: Green Bay or Milwaukee, WI.)

MC 4941 (Sub-43F), filed February 16, 1979. Applicant: QUINN FREIGHT LINES, INC., 1093 N. Montello Street, Brockton, MA 02403. Representative: John F. O'Donnell, 60 Adams Street, P.O. Box 238, Milton, MA 02187. To operate as a *common carrier*, by motor vehicle, in interstate or foreign commerce, over irregular routes, transporting *such commodities* as are dealt in by retail department stores, between the facilities of Zayre Corp., at points in the New York, NY, commerical zone as defined by the Commission, and points in MA on the one hand, and, on the other, points in IL, IN, MD, NY, OH, PA, and VA, restricted to the transportation of traffic originating at or destined to the facilities of Zayre Corp. at the named points. (Hearing site: Boston, MA.)

MC 5470 (Sub-173F), filed February 16, 1979. Applicant: TAJON, INC., R.D. 5, Mercer, PA 16137. Representative: Brian L. Troiano, 918 16th Street, N.W., Washington, DC 20006. To operate as a *common carrier*, by motor vehicle, in interstate or foreign commerce, over irregular routes, transporting *materials and supplies* used in the manufacture of glass containers, in dump vehicles, from those points in the United States in and east of MT, WY, CO, and NM to the facilities of Glass Containers Corp., at Dayville, CT, Forest Park, GA, Gas City and Indianapolis, IN, Jackson, MS, and Knox, Marienville, and Parker, PA. (Hearing site: Washington, DC, or Los Angeles, CA.)

MC 5470 (Sub-174F), filed February 16, 1979. Applicant: TAJON, INC., R.D. 5, Mercer, PA 16137. Representative: Brian L. Troiano, 918 16th Street NW., Washington, DC 20006. To operate as a *common carrier*, by motor vehicle, in interstate or foreign commerce, over irregular routes, transporting (1) *alloys and silicon metals*, in dump vehicles, from points in Colbert County, AL, to those points in the United States in and east of MN, IA, MO, AR, and LA; and (2) *materials and supplies* used in the manufacture of alloys and silicon metals, in dump vehicles, in the reverse direction. (Hearing site: Washington, DC, or New York, NY.)

MC 8310 (Sub-9F), filed February 22, 1979. Applicant: JEFF'S TRUCKING, INC., 22½ North Madison Street, P.O. Box 282, Waupun, WI 53963. Representative: Richard A. Westley, 4506 Regent Street, Suite 100, Madison, WI 53705. To operate as a *common carrier*, by motor vehicle, in interstate or foreign commerce, over irregular routes, transporting *canned and preserved foodstuffs*, and *materials, equipment, and supplies* used in the canning industry (except commodities in bulk), between the facilities of California Canners & Growers at or near Lomira, WI, on the one hand, and, on the other, points in IL, IN, MI, MO, MN, IA, KY, and OH. (Hearing site: Milwaukee, WI, or Chicago, IL.)

MC 16831 (Sub-25F), filed February 28, 1979. Applicant: MID SEVEN TRANSPORTATION CO., a corporation, 2323 Delaware Avenue, Des Moines, IA 50317. Representative: William L. Fairbank, 1980 Financial Center, Des Moines, IA 50309. To operate as a *common carrier*, by motor vehicle, in interstate or foreign commerce, over irregular routes, transporting *iron and steel articles*, from Chicago, IL, and St. Louis, MO, to the facilities of Deere & Company, at Ottumwa, IA. (Hearing site: Chicago, IL, or Des Moines, IA.)

MC 17051 (Sub-21F), filed February 26, 1979. Applicant: BARNET'S EXPRESS, INC., 758 Lidgerwood Avenue, Elizabeth, NJ 07202. Representative: S. Michael Richards, 44 North Avenue, P.O. Box 225, Webster, NY 14580. To operate as a *common carrier*, by motor vehicle, in interstate or foreign commerce, over irregular routes, transporting *wearing apparel*, on hangers, and *equipment, materials, and supplies* used or useful in the manufacture and sale of wearing apparel, (1) between the facilities of Cooper Sportswear Mfg. Co., Inc., at Carteret, Newark, Perth Amboy, and Trenton, NJ, and Johnstown, NY, on the one hand, and, on the other, Columbus, OH, (2) between the facilities of L. CID Casuals, Inc., at New York, NY, on the one hand, and, the other, Uniontown, AL, and (3) between the facilities of A. E. Nelson and Company, Inc., at Wilkes-Barre, PA, on the one hand, and, on the other, points in GA, KY, and TN. (Hearing site: Newark, NJ, or New York, NY.)

MC 33970 (Sub-21F), filed February 22, 1979. Applicant: GEORGE HILDEBRANDT, INC., R.D. 2, Hudson, NY 12534. Representative: Neil D. Breslin, 600 Broadway, Albany, NY 12207. To operate as a *common carrier*, by motor vehicle, in interstate or foreign commerce, over irregular routes, transporting (1) *solar salt*, from Jersey City, NJ, to points in CT, MA, NH, NY, RI and VT, (2) *salt*, from White Marsh, MD, to points in CT and MA, and (3) *brick and building tile*, from points in Albany County, NY, to points in CT, NJ, and VT, and Berkshire, Hampden, Franklin, and Hampshire Counties, MA. (Hearing site: Albany, NY.)

MC 35320 (Sub-215F), filed February 28, 1979. Applicant: TIME-DC, INC., P.O. Box 2550, Lubbock, TX 79408. Representative: Kenneth G. Thomas (same address as applicant). To operate as a *common carrier*, by motor vehicle, in interstate or foreign commerce, over regular routes, transporting *general commodities* (except those of unusual value, classes A and B explosives, ammunition, parts of ammunition, household goods as defined by the Commission, commodities in bulk, and those requiring special equipment), serving the facilities of MK Laboratories, Inc., at or near Halls, TN, as an off-route point in connection with carrier's otherwise authorized regular-route operations. (Hearing site: Memphis, TN, or Washington, DC.)

MC 35320 (Sub-216F), filed February 28, 1979. Applicant: TIME-DC, INC., P.O. Box 2550, Lubbock, TX 79408. Representative: Kenneth G. Thomas

(same address as applicant). To operate as a *common carrier*, by motor vehicle, in interstate or foreign commerce, over regular routes, transporting *general commodities* (except those of unusual value, classes A and B explosives, ammunition, parts of ammunition, household goods as defined by the Commission, commodities in bulk, and those requiring special equipment), serving the facilities of Old Hickory Products Company, at or near Woodstock, GA, as an off-route point in connection with carrier's otherwise authorized regular-route operations. (Hearing site: Atlanta, GA, or Washington, DC.)

MC 35320 (Sub-217F), filed February 28, 1979. Applicant: TIME-DC, INC., P.O. Box 2550, Lubbock, TX 79408. Representative: Kenneth G. Thomas (same address as applicant). To operate as a *common carrier*, by motor vehicle, in interstate or foreign commerce, over regular routes, transporting *general commodities* (except those of unusual value, classes A and B explosives, ammunition, parts of ammunition, household goods as defined by the Commission, commodities in bulk, and those requiring special equipment), serving the facilities of Hillerich & Bradsby Co., Inc., at or near Ellicottville, NY, as an off-route point in connection with carrier's otherwise authorized regular-route operations. (Hearing site: Buffalo, NY, or Washington, DC.)

MC 35320 (Sub-218F), filed February 28, 1979. Applicant: TIME-DC, INC., a Delaware corporation, P.O. Box 2550, Lubbock, TX 79408. Representative: Kenneth G. Thomas (same address as applicant). To operate as a *common carrier*, by motor vehicle, in interstate or foreign commerce, over regular routes, transporting *general commodities* (except those of unusual value, classes A and B explosives, household goods as defined by the Commission, commodities in bulk, those requiring special equipment, ammunition, and parts of ammunition), serving the facilities of Spalding Knitting Mills, Inc., at or near Griffin, GA, as an off-route point in connection with applicant's otherwise authorized regular-route operations. (Hearing site: Atlanta, GA, or Washington, DC.)

MC 35320 (Sub-219F), filed February 28, 1979. Applicant: TIME-DC, INC., P.O. Box 2550, Lubbock, TX 79408. Representative: Kenneth G. Thomas (same address as applicant). To operate as a *common carrier*, by motor vehicle, in interstate or foreign commerce, over regular routes, transporting *general commodities* (except those of unusual value, classes A and B explosives, ammunition, parts of ammunition household goods as defined by the Commission, commodities in bulk, and those requiring special equipment), serving the facilities of American Mills, at or near Griffin, Jackson, Monticello, and Gordon, GA, as off-route points in connection with carrier's otherwise authorized regular-route operations. (Hearing site: Atlanta, GA, or Washington, DC.)

MC 35320 (Sub-220F), filed February 28, 1979. Applicant: TIME-DC, INC., P.O. Box 2550, Lubbock, TX 79408. Representative: Kenneth G. Thomas (same address as applicant). To operate as a *common carrier*, by motor vehicle, in interstate or foreign commerce, over regular routes, transporting *general commodities* (except those of unusual value, classes A and B explosives, ammunition, and parts of ammunition, household goods as defined by the Commission, commodities in bulk, and those requiring special equipment), serving the facilities of W. R. Grace & Co., Cryovac Division, at or near Iowa Park, TX, as an off-route point in connection with carrier's otherwise authorized regular-route operations. (Hearing site: Ft. Worth, TX, or Washington, DC.)

MC 42011 (Sub-51F) filed February 23, 1979. Applicant: D. Q. WISE & CO., INC., P.O. Drawer L, Tulsa, OK 74112. Representative: J. G. Dail, JR., P.O. Box LL, McLean, VA 22101. To operate as a *common carrier*, by motor vehicle, in interstate or foreign commerce, over irregular routes, transporting (1) *Accessories, attachments, parts, and supplies* for off-highway vehicles; and (2) *equipment, materials, and supplies* used in, or in connection with, the manufacture and distribution of the commodities named in (1) above, between the facilities of Unit Rig & Equipment Co., at or near Mexia, TX, on the one hand, and, on the other, points in the United States (except AK, CT, DE, FL, GA, HI, ME, MA, NH, NC, RI, SC, and VT), restricted to the transportation of traffic originating at or destined to the named facilities. (Hearing Site: Tulsa, OK.)

MC 42261 (Sub-144F), filed January 23, 1979. Applicant: LANGER TRANSPORT CORP., Box 305, Jersey City, NJ 07303. Representative: W. C. Mitchell, 370 Lexington Avenue, New York, NY 10017. To operate as a *common carrier*, by motor vehicle, in interstate or foreign commerce, over irregular routes, transporting (1) *containers, container ends, and closures*, (except commodities in bulk), (2) *such other commodities* manufactured or distributed by manufacturers and distributors of containers when moving in mixed loads with containers, (except commodities in bulk), and (3) *materials, equipment, and supplies* used in the manufacture and distribution of containers, container ends, and closures, (except commodities in bulk), between points in the United States (except AK and HI). (Hearing site: Chicago, IL, or Washington, DC.)

MC 44801 (Sub-12F), filed February 26, 1979. Applicant: DICK HARRIS & SON TRUCKING CO., INC., P.O. Box 10277, Lynchburg, VA 24506. Representative: Morton E. Kiel, Suite 6193, 5 World Trade Center, New York, NY 10048. To operate as a *common carrier*, by motor vehicle, in interstate or foreign commerce, over irregular routes, transporting *such commodities* as are produced or used by a printing plant, between Lynchburg, VA Hickory, NC, and Des Moines, IA. (Hearing Site: Washington, DC.)

MC 47171 (Sub-122F), filed February 28, 1979. Applicant: COOPER MOTOR LINES, INC., P.O. Box 2820, Greenville, SC 29602. Representative: Harris G. Andrews (same address as applicant). To operate as a *common carrier*, by motor vehicle, in interstate or foreign commerce, over irregular routes, transporting *iron and steel articles*, between Sylvania, GA, on the one hand, and, on the other, Torrington, CT, Baltimore and Sparrows Point, MD, and Pawtucket, RI. (Hearing site: Washington, DC, or Columbia, SC.)

MC 52861 (Sub-51F), filed February 26, 1979. Applicant: WILLS TRUCKING, INC., 45 Rockside Road, Cleveland, OH 44131. Representative: Paul F. Beery, 275 East State Street, Columbus, OH 43215. To operate as a *common carrier*, by motor vehicle, in interstate or foreign commerce, over irregular routes, transporting *coke*, in bulk, in dump vehicles, between Erie, PA, and Toledo, OH, on the one hand, and, on the other, ports of entry on the international boundary line between the United States and Canada. (Hearing Site: Columbus, OH.)

MC 53841 (Sub-20F), filed February 1, 1979. Applicant: W. H. CHRISTIE & SONS, INC., Box 517, East State Street, Knox, PA 16232. Representative: John A. Pillar, 1500 Bank Tower, 307 Fourth Avenue, Pittsburgh, PA 15222. To operate as a *common carrier*, by motor vehicle, in interstate or foreign commerce, over irregular routes, transporting (1) *containers, and materials, equipment*, and *supplies* used in the manufacture and sale of containers (except commodities in bulk),

(a) between the facilities of Beverage Bottle Division-Hoover, Universal, Inc., at or near Columbus, OH, on the one hand, and, on the other, points in IN, IL, KY, MI, PA, TN, and WV, and (b) between the facilities of Beverage Bottle Division-Hoover Universal, Inc., at New Castle, DE, and points in PA and NY; and (2) *pillows, pads,* and *paddings,* from the facilities of Chemical Specialties Division-Hoover Universal, Inc., at or near Farewell, MI, to points in IL, NC, NJ, JY, and PA. (Hearing Site: Pittsburgh, PA, or Washington, DC.)

MC 53841 (Sub-21F), filed February 23, 1979. Applicant: W. H.CHRISTIE & SONS, INC., P.O. Box 517, East State Street, Knox, PA 16232. Representative: John A. Pillar, 1500 Bank Tower, 307 Fourth Avenue, Pittsburgh, PA 15222. To operate as a *common carrier,* by motor vehicle, in interstate or foreign commerce, over regular routes, transporting *general commodities* (except those of unusual value, classes A and B explosives, household goods as defined by the Commission, commodities in bulk, and those requiring special equipment), serving Knox, PA, as an off-route point in connection with carrier's otherwise authorized regular-route operations. (Hearing site: Pittsburgh, PA, or Washington, DC.)

MC 56270 (Sub-23F), filed February 22, 1979. Applicant: LEICHT TRANSFER & STORAGE CO., a corporation, 1401–55 State Street, P.O. Box 2385, Green Bay, WI 54306. Representative: Alki E. Scopelitis, 1301 Merchants Plaza, Indianapolis, IN 46204. To operate as a *common carrier,* by motor vehicle, in interstate or foreign commerce, over irregular routes transporting *such commodities* as are manufactured distributed, or used by manufacturers or distributors of paper, paper products and cellulose products, (except commodities in bulk, in tank vehicles), between points in WI, on the one hand, and, on the other points in the United States (except AK and HI). (Hearing Site: Madison or Milwaukee, WI.)

MC 61231 (Sub-137F), filed February 22, 1979. Applicant: EASTER ENTERPRISES, INC., doing business as, ACE LINES, INC., P.O. Box 1351, Des Moines, IA 50305. To operate as a *common carrier,* by motor vehicle, in interstate or foreign commerce, over irregular routes transporting *paper and paper products* and *materials, equipment, and supplies* used in the manufacture of paper and paper products (except commodities in bulk), (1) between Rogers, AR, on the one hand, and, on the other points in IL, WI, and MN, (2) between Marinette, Oconto Falls, Green Bay, and Fond du Lac, WI, on the one hand, and, on the other, points in MO, KS, AR, IL, IA, NE, and MN, and (3) between Chicage, IL, on the one hand, and, on the other, points in MO, KS, IA, NE, and MN. (Hearing site: Chicago, IL, or Philadelphia, PA.)

MC 61420 (Sub-2F), filed February 27, 1979. Applicant: AIR FREIGHT TRANSPORTATION CORP. of New Jersey, 333 North Henry Street, Brooklyn, NJ 11222. Representative: George A. Olsen, P.O. Box 357, Gladstone, NY 07934. To operate as a *contract carrier,* by motor vehicle, in interstate or foreign commerce, over irregular routes, transporting *such commodities* as are dealt in or used by retail sporting goods houses (except foodstuffs and commodities in bulk), between the facilities of Herman's World of Sporting Goods, at or near Carteret, NJ, on the one hand, and, on the other, points in CT, DE, GA, IL, IN, KY, MA, MD, ME, MI, MN, MO, NC, NH, NJ, NY, OH, PA, RI, SC, TN, VA, VT, WI, and DC, under continuing contract(s) with Herman's World of Sporting Goods, of Carteret, NJ. (Hearing site: New York, NY, or Washington, DC.)

MC 61420 (Sub-3F), filed February 27, 1979. Applicant: AIRFREIGHT TRANSPORTATION CORP. of New Jersey, 333 North Henry Street, Brooklyn, NY 11222. Representative: George A. Olsen, P.O. Box 357, Gladstone, NJ 07934. To operate as a *contract carrier,* by motor vehicle, in interstate or foreign commerce, over irregular routes, transporting *such commodities* as are dealt in or used by department stores (except foodstuffs and commodities in bulk), between the facilities of Lee Wards Creative Crafts Center, at or near Elgin, IL, on the one hand, and, on the other, points in DE, FL, IA, IL, IN, MD, MI, MN, MO, NJ, NY, OH, PA, VA, and WI, under continuing contract(s) with Lee Wards Creative Crafts Center, of Elgin, IL. (Hearing site: New York, NY, or Washington, DC.)

MC 67450 (Sub-81F), filed February 26, 1979. Applicant: PETERLIN CARTAGE CO., a corporation, 9651 South Ewing Avenue, Chicago, IL 60617. Representative: Joseph Winter, 29 South LaSalle Street, Chicago, IL 60603. To operate as a *common carrier,* by motor vehicle, in interstate or foreign commerce, over irregular routes, transporting *such commodities* as are sold by retail mail order houses, from points in NJ and NY, to the facilities of Lee Wards Creative Crafts, Inc., at Elgin, IL, restricted to the transportation of traffic orginating at the named origins and destined to the name destination. (Hearing site: Chicago, IL.)

MC 80430 (Sub-171F), filed February 26, 1979. Applicant: GATEWAY TRANSPORTATION CO., INC., 455 Park Plaza Drive, La Crosse, WI 54601. Representative: Lem Smith (same address as applicant). To operate as a *common carrier,* by motor vehicle, in interstate or foreign commerce, over irregular routes, transporting *general commodities* (except those of unusual value, classes A and B explosives, household goods as defined by the Commission, commodities in bulk, and those requiring special equipment), serving the facilities of Foldcraft Company, at Kenyon, MN, as an off-route point in connection with carrier's otherwise authorized regular-route operations. (Hearing site: St. Paul, MN.)

MC 82841 (Sub-247F), filed February 23, 1979. Applicant: HUNT TRANSPORTATION, INC., 10770 "I" Street, Omaha, NE 68127. Representative: Donald L. Stern, 610 Xerox Building, 7171 Mercy Road, Omaha, NE 68106. To operate as a *common carrier,* by motor vehicle, in interstate or foreign commerce, over irregular routes, transporting *such commodities* as are dealt in, or used by, agricultural equipment, industrial equipment, and lawn leisure products dealers, (except commodities in bulk), from the facilities of Deere and Company, at Denver, CO, to those points in NE and KS on and west of U.S. Hwy 183, points in Carbon, Natrona, Converse, Niobrara, Albany, Laramie, Platte, and Goshen Counties, WY, and points in CO. (Hearing site: Kansas City, MO, or Denver, CO.)

Note.—Dual operations may be involved.

MC 85970 (Sub-23F), filed February 21, 1979. Applicant: SARTAIN TRUCK LINE, INC., 1354 North Second Street, Memphis, TN 38107. Representative: Warren A. Goff, 2008 Clark Tower, 5100 Poplar Avenue, Memphis, TN 38137. To operate as a *common carrier,* by motor vehicle, in interstate or foreign commerce, over irregular routes, transporting (1) *fireplaces, barbeques, grills and ventilators,* and (2) *parts and accessories* for the commodities named in (1) above, between the facilities of Mobex Corporation, at or near Union City, TN, on the one hand, and, on the other, those points in the United States in and east of ND, SD, NE, CO, and NM. (Hearing site: Memphis, TN.)

Note.—Applicant indicates intention to tack with existing regular-route authority.

MC 88161 (Sub-95F), filed February 26, 1979. Applicant: INLAND TRANSPORTATION CO., INC., 6737

Corson Avenue, South, Seattle, WA 98108. Representative: Stephen A. Cole (same address as applicant). To operate as a *common carrier*, by motor vehicle, in interstate or foreign commerce, over irregular routes, transporting (1) *petroleum products*, in bulk, in tank vehicles, from (a) Portland, Linnton, and Willbridge, OR, to points in WA, and (b) Edmonds and Tacoma, WA, to points in OR, and (2) *petroleum products* (except asphalt, dust oil, road oil, and residual oil), in bulk, in tank vehicles, from (a) Spokane, WA, and points within ten (10) miles of Spokane, WA, (b) Pasco, WA, and points within ten (10) miles of Pasco, WA, and (c) Seattle, Tacoma, Edmonds, and Richmond Beach, WA, to points in that part of ID north of the southern boundary of Idaho County, ID. (Hearing site: Seattle or Spokane, WA.)

Note.—Dual operations may be involved.

MC 94430 (Sub-44F), filed February 6, 1979. Applicant: WEISS TRUCKING CO., INC., P.O. Box 7, Mongo, IN 46771. Representative: James R. Stiverson, 1396 West Fifth Avenue, Columbus, OH 43212. To operate as a *common carrier*, by motor vehicle, in interstate or foreign commerce, over irregular routes, transporting (1)(a) *cement*, from Buffington, IN, to Muskegon, MI, and points in Allegan, Barry, Eaton, Ingham, Livingston, Van Buren, Kalamazoo, Calhoun, Jackson, Washtenaw, Berrier, Cass, St. Joseph, Branch, Hillsdale, and Lenawee Counties, MI, and (b) *cement sacks*, in the reverse direction, (2) *stone and lime*, in bulk, or in bags, from Chicago, IL, to points in the Lower Peninsula of MI, and points in Lake, Porter, La Porte, St. Joseph, Elkhart, Lagrange, and Steuben Counties, IN, (3) *fly ash*, from Chicago and Romeoville, IL, to points in the lower peninsula of MI, and points in Lake, Porter, La Porte, St. Joseph, Elkhart, Lagrange and Steuben Counties, IN, (4) *lime*, from points in Muskegon County, MI, to Chicago, IL, and (5) *cement*, from Buffington, IN, to points in MI. (Hearing site: Detroit, MI, or Washington, DC.)

Note.—The purpose of this application is to convert contract carrier authority to common carrier authority.

MC 95540 (Sub-1086F), filed February 22, 1979. Applicant: WATKINS MOTOR LINES, INC., 1144 West Griffin Road, P.O. Box 1636, Lakeland, FL 33802. Representative: Benjy W. Fincher (same address as applicant). To operate as a *common carrier*, by motor vehicle, in interstate or foreign commerce, over irregular routes, transporting *chain saws, snow-throwers, and garden, lawn, turf, and golf course care equipment*, from the facilities of the Toro Company, at or near Windom, MN, and Tomah, WI, to points in AL, AR, FL, GA, KY, LA, MS, NC, SC, and TN, restricted to the transportation of traffic originating at the named origins and destined to the named destinations. (Hearing site: Minneapolis, MN, or Washington, DC.)

MC 95540 (Sub-1088F), filed February 23, 1979. Applicant: WATKINS MOTOR LINES, INC., 1144 West Griffin Road, P.O. Box 1636, Lakeland, FL 33802. Representative: Benjy W. Fincher (same address as applicant). To operate as a *common carrier*, by motor vehicle, in interstate or foreign commerce, over irregular routes, transporting *general commodities* (except those of unusual value, classes A and B explosives, household goods as defined by the Commission, commodities in bulk, and those requiring special equipment), between Chattanooga, TN, on the one hand, and, on the other, points in the United States (except AK and HI), restricted to the transportation of traffic originating at or destined to the facilities of Cherokee Warehouse Inc. (Hearing site: Atlanta, GA, or Washington, DC.)

MC 95540 (Sub-1089F), filed February 27, 1979. Applicant: WATKINS MOTOR LINES, INC., 1144 West Griffin Road, P.O. Box 1636, Lakeland, FL 33802. Representative: Benjy W. Fincher (same address as applicant). To operate as a *common carrier*, by motor vehicle, in interstate or foreign commerce, over irregular routes, transporting *sliding door hardware, hinges, channels, rails, stiles, iron and steel articles, and plastic articles*, from San Dimas, CA, to points in the United States (except AK and HI). (Hearing site: Los Angeles, CA, or Washington, DC.)

MC 105501 (Sub-35F), filed February 26, 1979. Applicant: TERMINAL WAREHOUSE COMPANY, a corporation, 1851 Radisson Road, N.E., Blaine, MN 55434. Representative: Samuel Rubenstein, 301 North Fifth St., Minneapolis, MN 55403. To operate as a *common carrier*, by motor vehicle, in interstate or foreign commerce, over irregular routes, transporting *iron and steel articles*, from the facilities of Simcote, Inc., at or near St. Paul, MN, to points in IA, IL, IN, KS, MI, MO, NE, and WI. (Hearing site: Minneapolis or St. Paul, MN.)

Note.—Dual operations may be involved.

MC 103051 (Sub-476F), filed February 6, 1979. Applicant: FLEET TRANSPORT COMPANY, INC., 934 44th Ave., N., Nashville, TN 37209. Representative: Russell E. Stone, P.O. Box 90408, Nashville, TN 37209. To operate as a *common carrier*, by motor vehicle, in interstate or foreign commerce, over irregular routes, transporting (1) *flour*, in bulk, in tank vehicles, from Newton, NC, to points in GA; (2) *animal fats*, in bulk, in tank vehicles, from Knoxville, TN, to points in NC; (3) *copper sulphate*, in bulk, in tank vehicles, from Portland, TN, to points in KY; and (4) *corn syrup, liquid sugar, and blends* of corn syrup and liquid sugar, in bulk, in tank vehicles, from Cheraw, SC, to points in NC. (Hearing site: Nashville, TN, or Atlanta, GA.)

MC 108341 (Sub-135F), filed February 22, 1979. Applicant: MOSS TRUCKING COMPANY, INC., 3027 N. Tryon St., P.O. Box 26125, Charlotte, NC 28213. Representative: Morton E. Kiel, Suite 6193, 5 World Trade Center, New York, NY 10048. To operate as a *common carrier*, by motor vehicle, in interstate or foreign commerce, over irregular routes, transporting (1) *air cleaning, filtering, and moving equipment;* and (2) *parts, accessories, and attachments* used in the installation and distribution of the commodities named in (1) above, from the facilities of Apitron Division, American Precision Industries, Inc., at or near Charlotte, NC, to those points in the United States in and east of MN, IA, MO, AR, and LA. (Hearing site: Buffalo, NY.)

MC 111611 (Sub-40F), filed November 3, 1978, and previously noticed in Federal Register issue of February 23, 1979. Applicant: NOERR MOTOR FREIGHT, INC., 205 Washington Ave., Lewistown, PA 17044. Representative: William D. Taylor, 100 Pine St., Suite 2550, San Francisco, CA 94111. To operate as a *common carrier*, by motor vehicle, in interstate or foreign commerce, over irregular routes, transporting *plastic containers and parts* for plastic containers, from the facilities of IMCO Container Co., at or near (a) Lewistown, PA, to points in OH, IL, IN, TN, VA, WV, NY, MD, DE, NJ, CT, RI, NC, SC, KY, and MA, at or near (b) Harrisonburg, VA, (c) Rockaway, NJ, (d) Jeffersonville, IN, (e) Vandalia, IL, (f) Pittsfield, MA, and (g) Goleta and LaMirada, CA, to Lewistown, PA. NOTE: This republication shows NC, SC, KY, and WV as destination states. (Hearing site: San Francisco, CA, or Harrisburg, PA.)

MC 114211 (Sub-400F), filed February 16,1979. Applicant: WARREN TRANSPORT, INC., P.O. Box 420, Waterloo, IA 50704. Representative: Adelor J. Warren (same address as applicant). To operate as a *common carrier*, by motor vehicle, in interstate or foreign commerce, over irregular routes, transporting (1) *fabricated steel products, agricultural implements,*

trailers, and buildings; and (2) *parts and accessories* for the commodities named in (1) above, from the facilities of The Binkley Company at Montgomery and Warren Counties, MO, to points in the United States (except AK and HI), restricted to the transportation of traffic originating at the named facilities. (Hearing site: St. Louis, MO.)

MC 114890 (Sub-90F), filed February 27, 1979. Applicant: COMMERCIAL CARTAGE CO., a corporation, 343 Axminster Drive, Fenton, MO 63026. Representative: David A. Cherry, P.O. Box 1540, Edmond, OK 73034. To operate as a *common carrier,* by motor vehicle, in interstate or foreign commerce, over irregular routes, transporting *hydrofluosilicic acid,* in bulk, in tank vehicles, from East St. Louis, IL, to points in MI, IL, IN, KY, WI, TN, IA, NE, KS, OH, MO, and MN. Hearing Site: St. Louis, MO, or East St. Louis, IL.)

MC 115311 (Sub-337F), filed February 26, 1979. Applicant: J & M TRANSPORTATION CO., INC., P.O. Box 488, Milledgeville, GA 31061. Representative: K. Edward Wolcott, 1200 Gas Light Tower, 235 Peachtree St., NE, Atlanta, GA 30303. To operate as a *common carrier,* by motor vehicle, in interstate or foreign commerce, over irregular routes, transporting *horticultural mulch,* in containers weighing 60 pounds each, from Hickory, NC, to points in AL, AR, CT, DE, FL, GA, IN, KY, LA, MA, MD, ME, MI, MS, NC, NH, NJ, NY, OH, PA, RI, SC, TN, TX, VA, VT, and WV. (Hearing site: Atlanta, GA.)

MC 115311 (Sub-342F), filed February 23, 1979. Applicant: J & M TRANSPORTATION CO., INC., P.O. Box 488, Milledgeville, GA 31061. Representative: Paul M. Daniell, P.O. Box 872, Atlanta, GA 30301. To operate as a *common carrier,* by motor vehicle, in interstate or foreign commerce, over irregular routes, transporting (1) *newsprint paper,* from points in Laurens County, GA, to points in AL, FL, GA, KY, LA, MS, NC, SC, TN, and VA; and (2) *materials, equipment, and supplies* used in the manufacture and distribution of newsprint paper, (except commodities in bulk), in the reverse direction. (Hearing site: Atlanta, GA.)

MC 115311 (Sub-338F), filed February 28, 1979. Applicant: J & M TRANSPORTATION CO., INC., P.O. Box 488, Milledgeville, GA 31061. Representative: Paul M. Daniell, 1200 Gas Light Tower, 235 Peachtree Street, NE, Atlanta, GA 30303. To operate as a *common carrier,* by motor vehicle, in interstate or foreign commerce, over irregular routes, transporting *sugar,* from points in LA, to points in AL, AR, GA, IL, IN, KY, MS, MO, NC, OH, OK, SC, TN, TX, VA, and WV. (Hearing site: New Orleans, LA.)

MC 115311 (Sub-344F), filed February 28, 1979. Applicant: J & M TRANSPORTATION CO., INC., P.O. Box 488, Milledgeville, GA 31061. Representative: Paul M. Daniell, 1200 Gas Light Tower, 235 Peachtree Street, NE, Atlanta, GA 30303. To operate as a *common carrier,* by motor vehicle, in interstate or foreign commerce, over irregular routes, transporting *composition board and plywood,* from Louisville, KY, to points in the United States (except AK and HI). (Hearing site: Louisville, KY.)

MC 115651 (Sub-57F), filed February 27, 1979. Applicant: KANEY TRANSPORTATION, INC., 7222 Cunningham Road, Rockford, IL 61102. Representative: E. Stephen Heisley, 805 McLachlen Bank Building, 666 Eleventh Street, NW, Washington, DC 20001. To operate as a *common carrier,* by motor vehicle, in interstate or foreign commerce, over irregular routes, transporting *liquid latex,* in bulk, in tank vehicles, from the facilities of Union Carbide Corp., at or near Alsip, IL, to points in CO, IA, IN, KY, MA, MI, MN, MO, NE, NY, OH, PA, SD, and WI. (Hearing site: Chicago, IL.)

MC 115730 (Sub-66F), filed February 22, 1979. Applicant: THE MICKOW CORP., P.O. Box 1774, 531 S.W. Sixth Street, Des Moines, IA 50306. Representative: Cecil L. Goettsch, 1100 Des Moines Building, Des Moines, IA 50309. To operate as a *common carrier,* by motor vehicle, in interstate or foreign commerce, over irregular routes, transporting (1) *iron and steel articles,* from points in Franklin County, MO, to points in CO, IL, IN, IA, KS, MI, MN, NE, OH, ND, SD, and WI; and (2) *materials, equipment, and supplies* used in the manufacture and processing of iron and steel articles, in the reverse direction. (Hearing site: St. Louis, MO, or Washington, DC.)

MC 115841 (Sub-683F), filed February 14, 1979. Applicant: COLONIAL REFRIGERATED TRANSPORTATION, INC., 9041 Executive Park Drive, Suite 110, Building 100, Knoxville, TN 37919. Representative: D. R. Beeler (same address as applicant). To operate as a *common carrier,* by motor vehicle, in interstate or foreign commerce, over irregular routes, transporting *iron, steel, fiberglass, and aluminum catwalks,* from the facilities of IKG Industries, at or near Nashville, TN, to points in AR, KS, MO, OK, and TX. (Hearing site: Nashville, TN, or Washington, DC.)

MC 115841 (Sub-684F), filed February 15, 1979. Applicant: COLONIAL REFRIGERATED TRANSPORTATION, INC., 9041 Executive Park Drive, Suite 110, Building 100, Knoxville, TN 37919. Representative: D. R. Beeler (same address as applicant). To operate as a *common carrier,* by motor vehicle, in interstate or foreign commerce, over irregular routes, transporting *drugs, medicines, solutions, distilled water, syringes, rubber articles, plastic articles, gloves, in-patient treatment kits, and expandable administration sets,* from Rocky Mount, NC, to points in AR, CA, CO, GA, IA, IL, IN, KS, LA, MI, MN, MO, MS, OH, OK, TN, TX, and WA. (Hearing site: Raleigh, NC, or Washington, DC.)

MC 115841 (Sub-685F), filed February 28, 1979. Applicant: COLONIAL REFRIGERATED TRANSPORTATION, INC., 9041 Executive Park Drive, Suite 110, Building 100, Knoxville, TN 37919. Representative: D. R. Beeler (same address as applicant). To operate as a *common carrier,* by motor vehicle, in interstate or foreign commerce, over irregular routes, transporting *foodstuffs* (except commodities in bulk, in tank vehicles), in vehicles equipped with mechanical refrigeration, from the facilities of Kraft, Inc., at or near Atlanta and Decatur, GA, to Dallas and Garland, TX. (Hearing site: Chicago, IL, or Washington, DC.)

MC 115841 (Sub-686F), filed February 28, 1979. Applicant: COLONIAL REFRIGERATED TRANSPORTATION, INC., Suite 110, Building 100, 9041 Executive Park Drive, Knoxville, TN 37919. Representative: David C. Venable, 805 McLachlen Bank Bldg., 666 Eleventh St., N.W., Washington, DC 2000. To operate as a *common carrier,* by motor vehicle, in interstate or foreign commerce, over irregular routes, transporting (1) *such commodities* as are dealt in by discount and variety store (except foodstuffs, furniture, and commodities in bulk), and (2) *foodstuffs* (except in bulk, and furniture when moving in mixed loads with the commodities named in (1) above, from Savannah, GA, to points in IA, NE, KS, MO, OK, and AR. (Hearing site: Atlanta, GA, or Detroit, MI.)

MC 115931 (Sub-81F), filed February 27, 1979. Applicant: BEE LINE TRANSPORTATION, INC., P.O. Box 3987, Missoula, MT 59801. Representative: Gene P. Johnson P.O. Box 2471, Fargo, ND 58108. To operate as a *common carrier,* by motor vehicle, in interstate or foreign commerce, over irregular routes, transporting (1) *iron, steel, zinc,* and *lead and products or the*

foregoing commodities, springs, and construction materials, supplies, and equipment (except commodities in bulk), from the facilities of Penn-Dixie Steel Corp., and Steven Spring, Inc., at or near Blue Island and Joliet, IL, Cicero, Elkhart, Fort Wayne, and Kokomo, IN, Centerville, IA, Grand Rapids and Lansing, MI, Columbus and Toledo, OH, and Denver, CO, to points in the United States in and west of MI, OH, IN, IL, MO, AR, and TX (except AK and HI); and (2) *materials, supplies, and equipment* used in the manufacture and distribution of the commodities named in (1) above (except commodities in bulk), in the reverse direction. (Hearing site: Chicago, IL, or Indianapolis, IN.)

MC 117730 (Sub-43F), filed February 23, 1979. Applicant: KOUBENEC MOTOR SERVICE, INC., Route 47, Huntley, IL 60142. Representative: Stephen H. Loeb, Suite 200, 205 West Touhy Avenue, Park Ridge, IL 60068. To operate as a *common carrier*, by motor vehicle, in interstate or foreign commerce, over irregular routes, transporting *industrial sand, and materials and supplies* used in the production of industrial sand, between points in IL and MI, on the one hand, and, on the other, those points in the United States in and east of MT, WY, CO, and NM. (Hearing site: Chicago, IL.)

MC 117940 (Sub-312F), filed February 28, 1979. Applicant: NATIONWIDE CARRIERS, INC., P.O. Box 104, Maple Plain, MN 55359. Representative: Allan L. Timmerman 5300 Highway 12, Maple Plain, MN 55359. To operate as a *common carrier*, by motor vehicle, in interstate or foreign commerce, over irregular routes, transporting *general commodities* (except those of unusual value, classes A and B explosives, household goods as defined by the Commission, commodities in bulk, those requiring special equipment, and foodstuffs), from points in OH to the facilities of Gamble Skogmo, Inc., at points in IL, MI, and WI, restricted to transportation of traffic originating at the indicated points and destined to the named destinations. (Hearing site: Minniapolis, or St. Paul, MN.)

MC 118431 (Sub-29F), filed February 26, 1979. Applicant: DENVER SOUTHWEST EXPRESS, INC., P.O. Box 9950, Little Rock, AR 72209. Representative: Scott E. Daniel, 800 Nebraska Savings Bldg., 1623 Farnam, Omaha, NE 68102. To operate as a *contract carrier*, by motor vehicle, in interstate or foreign commerce, over irregular routes, transporting (1) *such commodities* as are dealt in by grocery and food business houses (except commodities in bulk); and (2) *equipment, materials, and supplies* used in the conduct of such business (except commodities in bulk), in vehicles equipped with mechanical refrigeration, from Los Angeles and Ontario, CA, to points in AZ, CO, ID, MT, NV, NM, OR, UT, WA, and WY, restricted to the transporting of traffic originating at or destined to the facilities of Kraft, Inc., under continuing contract(s) with Kraft, Inc., of Chicago, IL. (Hearing site: Los Angeles, CA, or Phoenix, AZ.)

Note.—Dual operations may be involved.

MC 119560 (Sub-20F), filed February 15, 1979. Applicant: SOUTHERN BULK HAULERS, INC., P.O. Box 278, Harleyville, SC 29448. Representative: Edward G. Villalon, 1032 Pennsylvania Building, Pennsylvania Avenue & 13th St., NW., Washington, DC 20004. To operate as a *common carrier*, by motor vehicle, in interstate or foreign commerce, over irregular routes, transporting *dry terephthalic acid*, in bulk, in tote bins and hopper-type vehicles, from points in Berkeley County, SC, to those points in the United States in and east of ND, SD, NE, KS, OK, and TX. (Hearing site: Chicago, IL.)

MC 119631 (Sub-32F), filed February 26, 1979. Applicant: DEIOMA TRUCKING COMPANY, a corporation, P.O. Box 3315, Mount Union Station, Alliance, OH 44601. Representative: Lawrence E. Lindeman, Suite 1032, Pennsylvania Bldg., 425 13th St., NW., Washington, DC 20004. To operate as a *common carrier*, by motor vehicle, in interstate or foreign commerce, over irregular routes, transporting (1) *clay products and refractories, and materials and supplies* used in the installation of the foregoing commodities, (1) from points in Carroll, Columbiana, Mahoning, and Stark Counties, OH, and points in Tuscarawas County, OH, within 5 miles of East Sparta, OH, to points in AL, AZ, AR, CA, CO, FL, GA, ID, IN, IA, KS, KY, LA, MN, MS, MO, NE, NV, NM, NC, ND, OK, OR, SC, TN, TX, UT, VA, WA, WY, and DC, (2) from Shreve, OH, to points in AL, AZ, AR, CA, CO, FL, GA, ID, IL, IN, IA, KS, KY, LA, MN, MS, MO, NE, NV, NM, NC, ND, OK, OR, SC, SD, TN, TX, UT, VA, WA, WI, WY, and DC, (3) from Houston, MS, to points in the United States (except AK and HI); and (2) *materials* used in the manufacture of clay products and refractories, (1) from points in AL, AZ, AR, CA, CO, FL, GA, ID, IL, IN, IA, KS, KY, LA, MN, MS, MO, NE, NV, NM, NC, ND, OK, OR, SC, SD, TN, TX, UT, VA, WA, WI, WY, and DC, to points in Carroll, Columbiana, Mahoning, and Stark Counties, OH, points in Tuscarawas County, OH, within 5 miles of East Sparta, OH, and Shreve, OH, and (2) from points in the United States (except AK and HI), to Houston, MS. (Hearing site: Columbus, OH.)

MC 119741 (Sub-147F), filed February 22, 1979. Applicant: GREEN FIELD TRANSPORT COMPANY, INC., 1515 Third Avenue, N.W., P.O. Box 1235, Fort Dodge, IA 50501. Representative: D. L. Robson (same address as applicant). To operate as a *common carrier*, by motor vehicle, in interstate or foreign commerce, over irregular routes, transporting (1) *animal drugs or medicines, animal feed, and supplement powder*; and (2) *materials, equipment, and supplies* used in the manufacture and distribution of the commodities named in (1) above, from the facilities of Fort Dodge Laboratories, Division of American Home Products Corp., at Fort Dodge, IA, to points in CA, CO, FL, IL, IA, GA, MN, MO, MT, NJ, NY, ND, OH, OK, OR, PA, TN, and TX. (Hearing site: Fort Dodge, IA.)

MC 120761 (Sub-53F), filed February 22, 1979. Applicant: NEWMAN BROS. TRUCKING COMPANY, a corporation, 6559 Midway Road, P.O. Box 18728, Fort Worth, TX 76118. Representative: Clint Oldham, 1108 Continental Life Building, Fort Worth, TX 76102. To operate as a *common carrier*, by motor vehicle, in interstate or foreign commerce, over irregular routes, transporting (1) *iron and steel articles*, from the facilities of Nucor Steel, at or near Jewett, TX, to points in CA, IL, IN, IA, NE, NV, OH, UT, and WY; and (2) *materials, equipment, and supplies* used in connection with the production or manufacture of iron and steel articles, from points in AL, AR, AZ, CA, CO, FL, GA, IL, IN, IA, KS, KY, LA, MS, MO, NE, NV, NM, OH, OK, SC, TN, UT, and WY, to the facilities of Nucor Steel, at or near Jewett, TX. (Hearing site: Dallas, TX.)

MC 121060 (Sub-92F), filed February 26, 1979. Applicant: ARROW TRUCK LINES, INC., P.O. Box 1416, Birmingham, AL 35201. Representative: Ronald F. Harris (same address as applicant). To operate as a *common carrier*, by motor vehicle, in interstate or foreign commerce, over irregular routes, transporting (1) *aluminum and aluminum articles*, between Moultrie, GA, on the one hand, and, on the other, those points in the United States in and east of ND, SD, NE, KS, OK, and TX, and (2) *materials, equipment, and supplies* used in the manufacture of aluminum and aluminum articles, (except commodities in bulk), in the reverse direction. (Hearing site: Birmingham, AL, or Atlanta, GA.)

MC 123391 (Sub-14F), filed February 23, 1979. Applicant: MACHISE INTERSTATE TRANSPORTATION CO., a corporation, 500 Egg Harbor Road, Hammonton, NJ 08037. Representative: Alan Kahn, 1920 Two Penn Center Plaza, Philadelphia, PA 19102. To operate as a *common carrier*, by motor vehicle, in interstate or foreign commerce, over irregular routes, transporting *petroleum products*, in tank vehicles, between Philadelphia, PA, and Deleware City, DE, on the one hand, and, on the other, points in PA east of the western boundaries of York, Dauphin, Northumberland, Montour, Columbia, Sullivan, and Bradford Counties, Baltimore, MD, and points in MD east of the Chesapeake Bay, and those in Baltimore, Carroll, Cecil, Frederick, and Harford Counties, MD, and points in DE and NJ. (Hearing site: Washington, DC, or Philadelphia, PA.)

MC 124170 (Sub-111F), filed January 12, 1979, previously noticed in Federal Register issued of April 30, 1979. Applicant: FROSTWAYS, INC., 3000 Chrysler Service Drive, Detroit, MI 48207. Representative: William J. Boyd, 600 Enterprise Drive, Suite 222, Oak Brook, IL 60521. To operate as a *common carrier*, by motor vehicle, in interstate or foreign commerce, over irregular routes, transporting *meats, meat products and meat byproducts and articles distributed by meat-packing houses*, as described in sections A and C of Appendix I to the Report in *Descriptions in Motor Carrier Certificates*, 61 M.C.C. 209 and 766, (except hides and commodities in bulk), from points in Wayne, McComb, and Oakland Counties, MI, to points in AR, LA, MO, NM, OK, and TX. (Hearing site: Detroit, MI, or Washington, DC.)

Note.—This republication includes TX as a destination State.

MC 124170 (Sub-114F), filed February 8, 1979. Applicant: FROSTWAYS, INC., 3000 Chrysler Service Drive, Detroit, MI 48207. Representative: William J. Boyd, 600 Enterprise Drive, Suite 222, Oak Brook, IL 60521. To operate as a *common carrier*, by motor vehicle, in interstate or foreign commerce, over irregular routes, transporting *laboratory reagents and culture media*, from Irving, TX, to points in the United States (except AK and HI). (Hearing site: Washington, DC, or Detroit, MI.)

MC 124170 (Sub-115F), filed December 26, 1978. Applicant: FROSTWAYS, INC., 3000 Chrysler Service Drive, Detroit, MI 48207. Representative: William J. Boyd, 600 Enterprise Drive, Suite 222, Oak Brook, IL 60521. To operate as a *common carrier*, by motor vehicle, in interstate or foreign commerce, over irregular routes, transporting (1) *foodstuffs*, and (2) *meats, meat products, and meat byproducts, and articles distributed by meat-packing houses*, as described in sections A and C of Appendix I to the Report in *Descriptions in Motor Carrier Certificates*, 61 M.C.C. 209 and 766, (except hides and commodities in bulk), from points in the lower peninsula of MI, to points in KY, TN, LA, MS, AL, GA, NC, SC, VA, WV, and FL. (Hearing site: Detroit, MI.)

MC 124711 (Sub-83F), filed February 26, 1979. Applicant: BECKER CORPORATION, P.O. Box 1050, El Dorado, KS 67042. Representative: Norman A. Cooper (same address as applicant). To operate as a *common carrier*, by motor vehicle, in interstate or foreign commerce, over irregular routes, transporting *emulsified asphalt*, in bulk, from the facilities of Hy-Way Asphalt Products, Inc., at or near Henderson, NE, to points in IA, KS, MO, SD, and WY. (Hearing site: Wichita, KS, or Lincoln, NE.)

MC 124920 (Sub-17F), filed February 16, 1979. Applicant: LA BAR'S, INC., 771 Scott Street, Wilkes-Barre, PA 18705. Representative: Mark D. Russell, 406–7, Walker Building, 734 15th Street, N.W., Washington, DC 20005. To operate as a *common carrier*, by motor vehicle, in interstate or foreign commerce, over irregular routes, transporting *such commodities* as are dealt in by retail department stores, *printed matter*, and *materials and supplies* used in the manufacture and distribution of printed matter, between Exeter, PA, on the one hand, and, on the other, Mobile and Birmingham, AL, Phoenix and Tucson, AZ, Little Rock, AR, Downey, Long Beach, Los Angeles, San Francisco, and Whittier, CA, Denver, CO, Cutler Ridge, Jacksonville, Miami, Pensacola, Plantation, West Hollywood, and West Palm Beach, FL, Columbus, GA, Indianapolis and South Bend, IN, Chicago, Freeport, and Springfield, IL, Kansas City, KS, Baltimore, MD, Jackson, MS, St. Louis, MO, Cincinnati, Cleveland, Columbus, and Dayton, OH, Tulsa, OK, Murfreesboro, TN, Arlington, Austin, Fort Worth, Laredo, and Lubbock, TX, Lynchburg, Norfolk, and Richmond, VA, and Washington, DC. (Hearing Site: Wilkes-Barre, PA, or Washington, DC.)

MC 126461 (Sub-5F), filed February 22, 1979. Applicant: PACIFIC FREIGHTWAYS LTD., 8020 Enterprise St., Burnaby, British Columbia, Canada V5A 1V7. Representative: George Kargianis, 2120 Pacific Bldg., Seattle, WA 98104. To operate as a *common carrier*, by motor vehicle, in foreign commerce only, over irregular routes, transporting (1) *general commodities* (except those of unusual value, classes A and B explosives, household goods as defined by the Commission, commodities in bulk, those requiring special equipment, and motor vehicles), in containers, and (2) *empty containers*, between points on the international boundary line between the United States and Canada, at or near Blaine, WA, on the one hand, and, on the other, Seattle and Tacoma, WA, restricted in (1) above to the transportation of traffic having a prior or subsequent movement by water. (Hearing site: Seattle, WA.)

MC 127840 (Sub-90F), filed February 5, 1979. Applicant: MONTGOMERY TANK LINES, INC., 17550 Fritz Drive, P.O. Box 382, Lansing, IL 60438. Representative: William H. Towle, 180 North LaSalle Street, Chicago, IL 60601. To operate as a *common carrier*, by motor vehicle, in interstate or foreign commerce, over irregular routes, transporting (1) *animal fats, animal oils, and vegetable oils*, in bulk, in tank vehicles; and (2) *products and blends* of the commodities named in (1) above, in bulk, in tank vehicles, between Chicago, IL, on the one hand, and, on the other, points in the United States (except AK and HI). (Hearing Site: Chicago, IL.)

MC 128021 (Sub-37F), filed February 26, 1979. Applicant: DIVERSIFIED TRUCKING CORP., 309 Williamson Avenue, Opelika, AL 36801. Representative: Robert E. Tate, P.O. Box 517, Evergreen, AL 36401. To operate as a *contract carrier*, by motor vehicle, in interstate or foreign commerce, over irregular routes, transporting (1) *plastic bags, plastic can liners, plastic containers, plastic articles, plastic film, plastic sheeting, plastic drop cloths, and plastic tarpaulins*, from points in Lawrence County, TN, to points in AL, AR, CO, FL, GA, IL, IN, KS, KY, LA, MI, MS, MO, NC, OH, OK, SC, TX, VA, and WV; and (2) *equipment, materials, and supplies* used in the manufacture and distribution of the commodities named in (1) above, (except commodities in bulk, in tank vehicles), in the reverse direction, under continuing contract(s) with Webster Industries, Inc., of Peabody, MA. (Hearing site: Nashville, TN, or Atlanta, GA.)

Note.—Dual operations may be involved.

MC 128021 (Sub-38F), filed February 27, 1979. Applicant: DIVERSIFIED TRUCKING., 309 Williamson Ave., Opelika, Al 36801. Representative: Robert E. Tate, P.O. Box 517, Evergreen, AL 35401. To operate as a *contract carrier*, by motor vehicle, in interstate or

foreign commerce, over irregular routes, transporting (1) *plastic bags, plastic can liners, plastic containers, plastic articles, plastic film, plastic sheeting, plastic drop cloths,* and *plastic tarpaulins,* from points in McDonough County, IL, to points in CA, CO, IA, ID, IL, IN, KS, MI, MN, MO, MT, NE, ND, NV, OH, OR, SD, UT, WA, WI, and WY, and (2) *materials, equipment, and supplies* used in the manufacture and distribution of the commodities named in (1) above, (except commodities in bulk, in tank vehicles), in the reverse direction, under continuing contract(s) with Webster Industries, Inc., of Peabody, MA. (Hearing site: Chicago, IL, or Atlanta, GA.)

Note.—Dual operations may be involved.

MC 133420 (Sub-1F), filed February 27, 1979. Applicant: TRI-STATE TRANSPORT, INC., P.O. Box 2168, Long Beach, CA 90408. Representative: William J. Lippman, 50 South Steele Street, Suite 330, Denver, CO 80209. To operate as a *common carrier,* by motor vehicle, in interstate or foreign commerce, over irregular routes, transporting *aluminum valves, pipe fittings, thermostats, thermostatic controls, brass forgings, and machinery,* between the facilities of Robertshaw Controls Co., at Los Angeles, CA, El Paso, TX, Chicago, IL, Atlanta, GA, Montgomery, AL, and Nashville and Johnson City, TN. (Hearing site: Los Angeles, CA)

MC 133591 (Sub-63F), filed February 16, 1979. Applicant: WAYNE DANIEL TRUCK, INC., Post Office Box 303, Mount Vernon, MO 65712. Representative: Harry Ross, 58 S. Main Street, Winchester, KY 40391. To operate as a *common carrier,* by motor vehicle, in interstate or foreign commerce, over irregular routes, transporting *confectionery,* from Robinson, IL, to points in LA, AR, TX, OK, TN, MI, MN, GA, FL, NJ, NY, MA, CT, PA, and OH, and Kansas City, Mo. (Hearing site: St. Louis, MO.)

Note.—Dual operations may be involved.

MC 134300 (Sub-36F), filed February 23, 1979. Applicant: TRIPLE R EXPRESS, INC., 498 First Street Northwest, New Brighton, MN 55112. Representative: Samuel Rubenstein, 301 North Fifth Street, Minneapolis, MN 55403. To operate as a *common carrier,* by motor vehicle, in interstate or foreign commerce, over irregular routes, transporting *polypropylene agricultural baler twine,* from Albert Lea, Mn, to those points in the United states in and east of ND, SD, NE, KS, OK, AR, and LA. (Hearing Site: Minneapolis or St. Paul, MN.)

MC 134501 (Sub-45F), filed February 26, 1979. Applicant: INCORPORATED CARRIERS, LTD., P.O. Box 1050, El Dorado, KS 67042. Representative: T. M. Brown, P.O. Box 1540, Edmond, OK 73034. To operate as a *common carrier,* by motor vehicle, in interstate or foreign commerce, over irregular routes, transporting (1) *new furniture,* from points in OR, to points in AZ, CA, NE, NM, WY, and DC; and (2) *fixtures,* from points in OR, to points in the United States (except AK and HI). (Hearing site: Portland or Eugene, OR.)

MC 134681 (Sub-8F), filed February 26, 1979. Applicant: VULCRAFT CARRIER CORPORATION, 4425 Randolph Road, Charlotte, NC 28211. Representative: Scott E. Daniel, P.O. Box 82028, Lincoln, NE 68501. To operate as a *contract carrier,* by motor vehicle, in interstate or foreign commerce, over irregular routes, transporting *iron and steel articles,* from the facilities of Nucor Corporation, Vulcraft Division, at or near Norfolk, NE, to points in AK, AZ, AR, CA, CO, ID, IL, IN, IA, KS, KY, LA, MI, MN, MO, MT, NE, NV, NM, ND, OH, OK, OR, SD, TX, UT, WA, WI, and WY, under continuing contract(s) with Nucor Corporation, of Norfolk, NE. (Hearing site: Omaha, NE.)

MC 135170 (Sub-34F), filed February 15, 1979. Applicant: TRI-STATE ASSOCIATES, INC., P.O. Box 188, Federalsburg, MD 21632. Representative: James C. Hardman, 33 North LaSalle Street, Chicago, IL 60602. To operate as a *contract carrier,* by motor vehicle, in interstate or foreign commerce, over irregular routes, transporting (1) *containers, container ends, and closures, and container accessories,* from Wayne, NJ, and Baltimore, MD, to points in MI, OH, and IN; and (2) *pallets, packing materials, and dunnage,* from Holland, St. Joseph, Benton Harbor, Shoreham, and Detroit, MI, Columbus and Worthington, OH, and Indianapolis, IN, to Wayne, NJ, Baltimore, MD, and points in IL, IN, WI, MI, and OH, under continuing contract(s) with The Continental Group, Inc., of Chicago, IL. (Hearing site: Washington, DC.)

MC 135410 (Sub-49F), filed February 22, 1979. Applicant: COURTNEY J. MUNSON, d.b.a. MUNSON TRUCKING, North 6th Street Road, Monmouth, IL 61462. Representative: Jack H. Blanshan, Suite 200, 205 West Touhy Avenue, Park Ridge, IL 60068. To operate as a *common carrier,* by motor vehicle, in interstate or foreign commerce, over irregular routes, transporting (1) *alcoholic beverages, and materials and supplies* used in the manufacture and sale of alcoholic beverages, (except commodities in bulk), from Peoria, IL, to points in AZ, CA, CO, CT, DE, FL, GA, IN, KY, LA, MN, MD, MA, ME, NM, NE, NY, NH, NJ, NC, OH, PA, RI, TN, VT, VA, WV, WY, and DC; (2) *alcoholic beverages,* (except commodities in bulk), from Scobeyville, NJ, to Peoria, IL, New Orleans, LA, those points in NY on and west of Interstate Hwy 81, and points in CT, DE, MD, MA, ME, NH, RI, VT, and DC; (3) *alcoholic beverages,* (except commodities in bulk), from New Orleans, LA, to Burlingame, CA, Scobeyville, NJ, and points in IL and MO; (4) *containers and container accessories,* from Brockway and Clarion, PA, to Peoria, IL, Scobeyville, NJ, New Orleans, LA, and Burlingame, CA; (5) *flavoring extracts,* (except commodities in bulk), from Clifton and E. Hanover, NJ, and New York and Patchogue, NY, to Peoria, IL; and (6) *sugar,* (except commodities in bulk), from points in NE and CO, to Peoria, IL. (Hearing site: Chicago, IL.)

MC 136161 (Sub-18F), filed February 22, 1979. Applicant: ORBIT TRANSPORT, INC., P.O. Box 163, Spring Valley, IL 61362. Representative: E. Stephen Heisley, 805 McLachlen Bank Building, 666 Eleventh Street NW., Washington, DC 20001. To operate as a *common carrier,* by motor vehicle, in interstate or foreign commerce, over irregular routes, transporting (1) *fibreglass and polyethylene tanks, parts and accessories* for fibreglass and polyethylene tanks, and plastic articles; and (2) *materials and supplies* used in the manufacture of the commodities named in (1) above, (except commodities in bulk), between Washington Court House, OH, on the one hand, and, on the other, those points in the United States in and east of MN, IA, MO, AR, and LA. (Hearing site: Cincinnati, OH.)

MC 138000 (Sub-45F), filed February 26, 1979. Applicant: ARTHUR H. FULTON, INC., P.O. Box 86, Stephens City, VA 22655. Representative: Edward N. Button, 1329 Pennsylvania Avenue, P.O. Box 1417, Hagerstown, MD 21740. To operate as a *common carrier,* by motor vehicle, in interstate or foreign commerce, over irregular routes, transporting *apple products and juices,* from Lincolnton, NC, to points in VA, TN, SC, GA, AL, and FL. (Hearing site: Lincolnton, NC.)

Note.—Dual operations may be involved.

MC 138741 (Sub-9F), filed February 23, 1979. Applicant: LEONARD TRUCKING, INC., 1605 Westside Hwy., Kelso, WA 98626. Representative: David C. White, 2400 SW Fourth Ave., Portland, OR 97201. To operate as a *common carrier,* by motor vehicle, in interstate or foreign

commerce, over irregular routes, transporting *beverages and beverage mixes*, in containers (except malt beverages and wine), between points in King County, WA, on the one hand, and, on the other, points in CA. (Hearing site: Seattle, WA.)

MC 139930 (Sub-3F), filed February 26, 1979. Applicant: ALPHIE J. BOUSLEY, INC., Route 3, Box 61–A, Armstrong Creek, WI 54103. Representative: Nancy J. Johnson, Route 1, Box 169C, Crandon, WI 54520. To operate as a *contract carrier*, by motor vehicle, in interstate or foreign commerce, over irregular routes, transporting *pallets and pallet parts*, from Township of Armstrong Creek, in Forest County, WI, to points in IL, under continuing contracts(s) with I. J. Millan Lbr. Corporation, of Armstrong Creek, WI. (Hearing site: Escanaba or Madison, WI.)

MC 140030 (Sub-8F), filed February 26, 1979. Applicant: PLASTIC EXPRESS, P.O. Box 5593, Orange, CA 92667. Representative: Richard C. Celio, 1415 West Garvey Avenue, Suite 102, West Covina, CA 91790. To operate as a *contract carrier*, by motor vehicle, in interstate or foreign commerce, over irregular routes, transporting *lubricating oil, oil products, and lubrication filters* (except commodities in bulk), from the facilities of the Pennzoil Company, at or near Portland, OR, to points in OR, WA, ID, and MT, under continuing contract(s) with Pennzoil Company, of Los Angeles, CA. (Hearing site: Los Angeles, CA.)

MC 140820 (Sub-12F), filed February 27, 1979. Applicant: A & R TRANSPORT, INC., 2996 N. Illinois 71, Ottawa, IL 61350. Representative: James R. Madler, 120 W. Madison St., Chicago, IL 60602. To operate as a *common carrier*, by motor vehicle, in interstate or foreign commerce, over irregular routes, transporting *dry plastics and liquid chemicals*, in bulk, from the facilities of Northern Petrochemical Company, at or near Lemont and Morris, IL, to points in CT, GA, IA, IN, KS, KY, MA, MI, MN, MO, NC, NJ, NY, OH, PA, RI, SC, TN, WI, and WV. (Hearing site: Chicago, IL.)

MC 141921 (Sub-48F), filed February 27, 1979. Applicant: SAV-ON TRANSPORTATION, INC., 143 Frontage Road, Manchester, NH 03108. Representative: John A. Sykas (same address as applicant). To operate as a *common carrier*, by motor vehicle, in interstate or foreign commerce, over irregular routes, transporting *meats, meat products, and meat byproducts, and articles distributed by meat-packing houses*, as described in sections A and C of Appendix I to the report in *Descriptions in Motor Carrier Certificates*, 61 M.C.C. 209 and 766 (except hides, skins, and commodities in bulk), from the facilities of Wilson Foods Corporation, at Albert Lea, MN, and Cedar Rapids, IA, to points in CT, DE, ME, MD, MA, NH, NJ, NY, PA, RI, VT, VA, and DC, restricted to the transportation of traffic originating at the named origins and destined to the named destinations. (Hearing site: Concord, NH, or Boston, MA.)

Note.—Dual operations may be involved.

MC 142330 (Sub-11F), filed February 14, 1979. Applicant: PONY EXPRESS COURIER CORPORATION, P.O. Box 4313, Atlanta, GA 30302. Representative: Francis J. Mulcahy (same address as applicant). To operate as a *common carrier*, by motor vehicle, in interstate or foreign commerce, over irregular routes, transporting *general commodities* (except those of unusual value, classes A and B explosives, household goods as defined by the Commission, commodities in bulk, those requiring special equipment, and such commercial papers, documents, and written instruments as are used in the business of banks and banking institutions), between points in NC, SC, and VA, restricted to the transportation of traffic weighing less than 200 pounds a shipment. (Hearing site: Raleigh, NC.)

Note.—Dual operations may be involved.

MC 142651 (Sub-1F), filed February 26, 1979. Applicant: MW WAREHOUSE CORP., 77 Metro Way, Secaucus, NJ 07094. Representative: Morton E. Kiel, Suite 6193, 5 World Trade Center, New York, NY 10048. To operate as a *contract carrier*, by motor vehicle, in interstate or foreign commerce, over irregular routes, transporting *such commodities* as are dealt in or used by manufacturers of wearing apparel and accessories for retail, specialty, and department stores (except foods and commodities in bulk), between the facilities of MW Warehouse Corp., at Secaucus, NJ, on the one hand, and, on the other, points in the United States (except AK and HI), under continuing contract(s) with Biderman Industries, U.S.A., of New York, NY. (Hearing site: New York, NY.)

MC 142960 (Sub-2F), filed February 22, 1979. Applicant: HUGH & LAILA PIXLEY, d.b.a. PIXLEY TRANSPORTATION, P.O. Box 6525, Sheridan, WY 82801. Representative: Hugh Pixley (same address as applicant). To operate as a *contract carrier*, by motor vehicle, in interstate or foreign commerce, over irregular routes, transporting *railroad crews and their baggage*, in the same vehicle with passengers, between Laurel, Forsyth, and Glendive, MT, Dickinson and Mandan, ND, and points in Yellowstone, Treasure, Rosebud, Custer, Prairie, Dawson, and Wibaux Counties, MT, and points in Golden Valley, Billings, Stark, and Morton Counties, ND, under continuing contract(s) with Burlington Northern, of St. Paul, MN. (Hearing site: Billings, MT.)

MC 143551 (Sub-4F), filed February 27, 1979. Applicant: ROBERT AND DOROTHY MUCKENHIRN, d.b.a. TRIANGLE TRUCKING, Route 2, Box 436, Delano, MN 55328. Representative: Samual Rubenstein, 301 North Fifth Street, Minneapolis, MN 55403. To operate as a *common carrier*, by motor vehicle, in interstate or foreign commerce, over irregular routes, transporting *polypropylene agricultural baler twine*, from Albert Lea, MN, to points in the United States in and west of ND, SD, IA, MO, AR, and LA, (except AK and HI), and points in GA. (Hearing site: Minneapolis or St. Paul MN.)

MC 143720 (Sub-4F), filed February 14, 1979. Applicant: AIRFREIGHT SERVICES, INC., 3 Choice Road, Windsor Locks, CT 06096. Representative: Thomas W. Murrett, 342 North Main Street, West Hartford, CT 06117. To operate as a *common carrier*, by motor vehicle, in interstate or foreign commerce, over irregular routes, transporting *general commodities* except those of unusual value, classes A and B explosives, household goods as defined by the Commission, commodities in bulk, and those requiring special equipment), between points in Hampden County, MA, and points in CT (except those in Fairfield County), on the one hand, and on the other, JFK International Airport and LaGuardia Field, New York, NY, restricted to the transportation of traffic having a prior or subsequent movement by air. (Hearing site: Hartford or New Haven, CT.)

MC 143901 (Sub-4F), filed February 21, 1979. Applicant: THOROUGHBRED TRUCKING, INC., 402–308th Street N.E., Stanwood, WA 98292. Representative: Ronald P. Erickson, 2120 Pacific Building, Seattle, WA 98104. To operate as a *contract carrier*, by motor vehicle, in interstate or foreign commerce, over irregular routes, transporting *such commodities* as are dealt in by grocery and food houses, from Seattle, WA, to Eugene, OR, Sacramento, San Francisco, Fresno, Bakersfield, Los Angeles, Redding, Santa Barbara, San Luis Obispo, and San Diego, CA, and Reno, Sparks, and Carson City, NV, under continuing contract(s) with Green Garden Food Products, Inc., of Seattle, WA. (Hearing site: Seattle, WA.)

MC 144041 (Sub-29F), filed February 16, 1979. Applicant: DOWNS TRANSPORTATION CO., INC., 2705 Canna Ridge Circle, NE., Atlanta, GA 30345. Representative: K. Edward Wolcott, P.O. Box 872, Atlanta, GA 30301. To operate as a *common carrier*, by motor vehicle, in interstate or foreign commerce, over irregular routes, transporting *expanded plastic products* (except commodities in bulk), from the facilities of Dow Chemical U.S.A., at or near Carteret, NJ, and Allyn's Point, CT, to those points in the United States on and east of U.S. Hwy 85. (Hearing site: Atlanta, GA.)

Note.—Dual operations may be involved.

MC 144470 (Sub-4F), filed February 14, 1979. Applicant: CLARENCE COBB, d.b.a COBB TRUCKING SERVICE, Route 3, Box 177, Bryan, TX 77801. Representative: Lawrence A. Winkle, Suite 1125 Exchange Park, Dallas, TX 75245. To operate as a *common carrier*, by motor vehicle, in interstate or foreign commerce, over irregular routes, transporting (1) *plastic pipe and plastic pipe fittings*, from Corsicana and Dallas, TX, to points in the United States (except AK and HI); and (2) *equipment, materials, and supplies* used in the installation of plastic pipe and plastic pipe fittings, when moving in mixed loads with the commodities named in (1) above, (except commodities in bulk, in tank vehicles), from Frisco, TX, to points in the United States (except AK and HI.) (Hearing site: Dallas, TX.)

MC 144740 (Sub-6F), filed February 13, 1979. Applicant: L. G. DeWitt, INC., P.O. Box 70, Ellerbe, NC 28338. Representative: Terrence D. Jones, 2033 K St., NW., Washington, DC 20006. To operate as a *contract carrier*, by motor vehicle, in interstate or foreign commerce, over irregular routes, transporting *foodstuffs* (except commodities in bulk), in vehicles equipped with mechanical refrigeration, from the facilities of Whitman's Chocolates Division, Pet Incorporated, at Philadelphia, PA, to (a) East Point, GA, and (b) points in AL, CT, DE, IA, IL, IN, KS, KY, MA, MD, ME, MI, MN, MO, MS, MT, NC, ND, NE, NH, NJ, NY, OH, PA, RI, SC, SD, TN (except Shelby County, TN), VA, VT, WI, WV, WY, and DC, under continuing contract(s) with Whitman's Chocolates Division, Pet Incorporated, of Philadelphia, PA. (Hearing site: Washington, DC.)

Note.—The person or persons who appear to be engaged in common control must either file an application under 49 U.S.C. § 11343(a) (formerly section 5(2) of the Interstate Commerce Act), or submit an affidavit indicating why such approval is unnecessary.

MC 144941 (Sub-2F), filed December 6, 1978, previously noticed in the Federal Register issue of March 1, 1979. Applicant: THE BEVERAGE CARRIER CORPORATION, 595 East Tallmadge Ave., Akron, OH 44310. Representative: Gary Rowland (same address as applicant). To operate as a *contract carrier*, by motor vehicle, in interstate or foreign commerce, over irregular routes, transporting (1) *carbonated beverages*, and *non-carbonated flavored beverages*, and (2) *equipment, materials*, and *supplies* used in the manufacture and distribution of the commodities named in (1) above, (except commodities in bulk), between points in OH, MI, IN, IL, and WI, under continuing contract(s) with The Coca-Cola Bottling Company of Ohio and The Coca-Cola Bottling Company of Michigan. (Hearing site: Cleveland, OH.)

Note.—This republication states the contracting shipper.

MC 145001 (Sub-5F), filed February 26, 1979. Applicant: HORACE CHAVIS, doing business as, CHAVIS TRANSFER, 2019 Decatur Street, Richmond, VA 23224. Representative: Calvin F. Major, 200 West Grace Street, Suite 415, Richmond, VA 23220. To operate as a *contract carrier*, by motor vehicle, in interstate or foreign commerce, over irregular routes, transporting *uncrated cabinets*, from points in VA, to points in GA, FL, NC, OH, TX, NY, KY, IN, MO, IL, MI, and DC, under continuing contract(s) with Modern Woodwork, Inc., of Richmond, VA. (Hearing Site: Richmond, VA.)

MC 145001 (Sub-6F), filed February 28, 1979. Applicant: HORACE CHAVIS, doing business as, CHAVIS TRANSFER, 2019 Decatur Street, Richmond, VA 23224. Representative: Calvin F. Major, 200 West Grace Street, Suite 415, Richmond, VA 23220. To operate as a *contract carrier*, by motor vehicle, in interstate or foreign commerce, over irregular routes, transporting *uncrated cabinets, and kitchen fixtures*, from points in VA, to points in MA, CT, PA, MJ, DE, TN, AL, MS, and AR, under continuing contract(s) with Richmond Lumber Company, of Richmond, VA. (Hearing Site: Richmond, VA.)

MC 145010 (Sub-1F), filed February 26, 1979. Applicant: WAYNE EXPRESS, INC., 29 Aberdeen Avenue, Wayne, NJ 07470. Representative: Robert B. Pepper, 168 Woodbridge Avenue, Highland Park, NJ 08904. To operate as a *contract carrier*, by motor vehicle, in interstate or foreign commerce, over irregular routes, transporting *groceries, and materials and supplies* used in the production, distribution, and sale of groceries (except frozen foods and commodities in bulk) between Secaucus, NJ, Rochester, NY, and Virginia Beach, VA, on the one hand, and, on the other, points in CT, DE, IL, IN, MD, MA, NJ, NY, OH, PA, RI, VA, and DC, under continuing contract(s) with Greenwich Mills Company, of Secaucus, NJ. (Hearing Site: Newark, NJ.)

MC 145221 (Sub-1F), filed February 26, 1979. Applicant: P.D.F. TRUCKING CO., a corporation, P.O. Box 398, Milan, OH 44846. Representative: John P. McMahon, 100 East Broad Street, Columbus, OH 43215. To operate as a *common carrier*, by motor vehicle, in interstate or foreign commerce, over irregular routes, transporting *roofing, building and insulating materials*, (except commodities in bulk), between the facilites of The Certain-Teed Corporation, at or near Avery, OH and Chicago, IL. (Hearing Site: Columbus, OH, or Washington, DC.)

MC 145331 (Sub-1F), filed February 15, 1979. Applicant: JOHNSTON BROS. TRANSPORT, INC., Box 1029, Glenwood Springs, CO 80601. Representative: Charles M. Williams, 350 Capitol Life Center, 1600 Sherman Street, Denver, CO 80203. To operate as a *contract carrier*, by motor vehicle, in interstate or foreign commerce, over irregular routes, transporting (1) *alcoholic beverages, materials, equipment, and supplies* used in the manufacture, sale, and distribution of alcoholic beverages, (except commodities in bulk), from Los Angeles, Irvine, Azusa, and Van Nuys, CA, Secaucus, NJ, Milwaukee, WI, Portland, OR, Peoria and Belleville, IL, New York, NY, Pabst, GA, Seattle, WA, San Antonio and Longview, TX, and Memphis, TN, to points in CO, under continuing contract(s) with Johnston Bros. Distributing Co., of Glenwood Springs, CO, and Murray Bros. Distributing Co., of Denver, CO. (Hearing site: Denver, CO.)

MC 145370 (Sub-1F), filed February 23, 1979. Applicant: PHARR BROTHERS, INC., P.O. Box 69, Blanchard, LA 71009. Representative: John Schwab, P.O. Box 3036, 617 North Boulevard, Baton Rouge, LA 70821. To operate as a *common carrier*, by motor vehicle, in interstate or foreign commerce, over irregular routes, transporting (1) *used construction machinery and equipment, and mining machinery and equipment*; and (2) *accessories* for the commodities named in (1) above, between points in AR, LA, MS, OK, and TX, restricted to the transportation of traffic originating at and destined to points in these States. (Hearing site: New Orleans, LA, or Dallas, TX.)

MC 145601 (Sub-1F), filed February 28, 1979. Applicant: MORGAN COUNTY TRUCKING, INC., 1010 East Nutter St., Martinsville, IN 46151. Representative: Warren C. Moberly, 777 Chamber of Commerce Bldg., Indianapolis, IN 46204. To operate as a *common carrier*, by motor vehicle, in interstate or foreign commerce, over irregular routes, transporting *malt beverages*, from Pabst, GA, Peoria, IL, Newport and Louisville, KY, St. Paul, MN, Detroit, MI, St. Louis, MO, Cleveland and Columbus, OH, and Milwaukee, WI, to points in Warren, Tippecanoe, Clinton, Hamilton, Madison, Henry, Rush, Hancock, Marion, Boone, Hendricks, Montgomery, Fountain, Putnam, Parke, Vermillion, Vigo, Clay, Owen, Morgan, Johnson, Shelby, Decatur, Bartholomew, Brown, Monroe, Green, Sullivan, Knox, Daviess, Martin, Lawrence, Jackson, Jennings, Scott, Washington, Orange, Dubois, Pike, Gibson, Posey, Vanderburgh, Warrick, Spencer, Crawford, Perry, Harrison, Floyd and Clark Counties, IN. (Hearing site: Indianapolis, IN, or Chicago, IL.)

Note.—Dual operations may be involved.

MC 145890 (Sub-1F), filed February 26, 1979. Applicant: EUGENE W. BELL, d.b.a. BELL TRUCKING, 11804 Brockman, Adelanto, CA 90801. Representative: Milton W. Flack, 4311 Wilshire Blvd., Suite 300, Los Angeles, CA 90010. To operate as a *contract carrier*, by motor vehicle, in interstate or foreign commerce, over irregular routes, transporting *steel articles*, from the facilities of Carpenter Technology Corporation, at or near Bridgeport, CT, and Reading, PA, to points in CA, NV, and TX, under continuing contract(s) with Carpenter Technology Corporation, of Reading, PA. (Hearing site: Los Angeles, CA.)

MC 145891 (Sub-1F), filed February 22, 1979. Applicant: THOMAS L. MARLOW, doing business as T. L. MARLOW TRUCKING, R.R. #3, Sullivan, IL 61951. Representative: Robert T. Lawley, 300 Reisch Bldg., Springfield, IL 62701. To operate as a *contract carrier*, by motor vehicle, in interstate or foreign commerce, over irregular routes, transporting *fertilizer and fertilizer ingredients*, between points in IL, IN, IA, KY, MO, OH, MI, and TN, under continuing contract(s) with Kaiser Agricultural Chemicals, Div. of Kaiser Aluminum & Chemical Sales, Inc., of Savannah, GA. (Hearing site: Chicago, IL, or St. Louis, MO.)

MC 145971 (Sub-2F), filed February 16, 1979. Applicant: J. J. SALINGER, INC., 3737 North Sixth Street, Harrisburg, PA 17110. Representative: Richard D. de Schweinitz, 2320 North Second Street, Harrisburg, PA 17110. To operate as a *common carrier*, by motor vehicle, in interstate or foreign commerce, over irregular routes, transporting (1) *wrecked and disabled motor vehicles and parts and equipment* used for their repair; and (2) *replacement vehicles* for the commodities named in (1) above, (except motor homes and trailers designed to be drawn by passenger vehicles), by use of wrecker and towing equipment only, between points in Dauphin, Cumberland, York, Lebanon, Franklin, and Lancaster Counties, PA, on the one hand, and, on the other, points in CT, DE, IL, IN, MD, MA, MI, NJ, NY, NC, OH, VA, WV, WI, and DC. (Hearing site: Washington, DC, or Philadelphia, PA.)

MC 146091 (Sub-1F), filed February 28, 1979. Applicant: JOHN E. HOTH AND BOBBIE J. HOTH, d.b.a. W. I. EXPRESS, Box 43, Garnaville, IA 52049. Representative: Carl E. Munson, 469 Fischer Bldg., Dubuque, IA 52001. To operate as a *common carrier*, by motor vehicle, in interstate or foreign commerce, over irregular routes, transporting *meats, meat products and meat byproducts and articles distributed by meat-packing houses*, as described in sections A and C of Appendix I to the Report in *Descriptions in Motor Carrier Certificates*, 61 M.C.C. 209 and 766 (except hides and commodities in bulk), (1) from the facilities of Wilson Foods Corp., at Cedar Rapids, IA, to points in WI, and (2) from the facilities of Wilson Foods Corp., at Dubuque, IA, to Kenosha, WI, restricted in (1) and (2) above to the transportation of traffic originating at the named origin facilities and destined to the named destinations. (Hearing site: Oklahoma City, OK, or Chicago, IL.)

MC 146131 (Sub-2F), filed February 26, 1979. Applicant: TRANSPORT ENTERPRISES, INC., 857 East St. Francis Road, DePere, WI 54115. Representative: Wayne W. Wilson, 150 E. Gilman St., Madison, WI 53703. To operate as a *common carrier*, by motor vehicle, in interstate or foreign commerce, over irregular routes, transporting *paper and paper products*, from DePere, WI, to points in AZ, CA, CO, ID, MT, NV, NM, OR, UT, WA, and WY, restricted to the transportation of traffic originating at the facilities of Nicolet Paper Corporation and destined to the named destinations. (Hearing site: Green Bay or Madison, WI.)

MC 146340F, filed February 7, 1979. Applicant: D. L. WILLIAMS TRUCKING, INC., P.O. Drawer 818, Hillsboro, TX 76645. Representative: James W. Hightower, First Continental Bank Bldg., Suite 301, 5801 Marvin D. Love Freeway, Dallas, TX 75237. To operate as a *contract carrier*, by motor vehicle, in interstate or foreign commerce, over irregular routes, transporting (1) *poles, posts, cross-ties, and lumber*, from points in AL, AR, AZ, CO, GA, LA, MS, NM, OK, and TX, to points in AL, AZ, AR, CO, FL, GA, IL, IN, IA, KS, KY, LA, MS, MO, NE, NM, NC, OH, OK, SC, TN, TX, VA, and WV; and (2) *granite*, from points in GA and TN, to Hillsboro, TX, under continuing contract(s) with D. L. Williams Wood Products, Inc., of Hillsboro, TX. (Hearing Site: Dallas, TX.)

MC 146381 (Sub-1F), filed February 26, 1979. Applicant: CONVERTERS II, INC., 300 Bostwick Avenue, Bridgeport, CT. Representative: Arthur J. Piken, 1 Lefrak City Plaza, Flushing, NY 11368. To operate as a *contract carrier*, by motor vehicle, in interstate or foreign commerce, over irregular routes, transporting (1) *piece goods*, between the facilities of Hull Dye & Print Works, Inc., at or near Shelton and Derby, CT, on the one hand, and, on the other, New York, NY, and points in Dutchess, Orange, Rockland, Westchester, Nassau, and Suffolk Counties, NY, Hudson, Passaic, Union, Middlesex, Bergen, Essex, Morris, and Somerset Counties, NJ, and Lehigh County, PA; and (2) *materials, supplies, equipment, and machinery*, (except commodities in bulk), used in the dyeing and finishing of piece goods, in the reverse direction, under continuing contract(s) with Hull Dye & Print Works, Inc., of Derby, CT. (Hearing Site: New York, NY.)

MC 146421F, filed February 27, 1979. Applicant: CLARENCE WYATT TRANSFER, INC., 707 East 7th St., Richmond, VA 23224. Representative: Harry C. Ames, Jr., 805 McLachlen Bank Bldg., 666 Eleventh St., N.W., Washington, DC 20001. To operate as a *Common carrier*, by motor vehicle, in interstate or foreign commerce, over irregular routes, transporting *general commodities* (except classes A and B explosives, household goods as defined by the Commission, commodities in bulk, commodities requiring special equipment, and motor vehicles), in containers, or in trailers having an immediately prior or subsequent movement by water or rail, between Richmond and Norfolk, VA, on the one hand, and, on the other, points in NC, VA, WV, and Baltimore, MD, and Washington, DC. (Hearing Site: Richmond, VA, or Washington, DC.)

MC 146440F, filed February 16, 1979. Applicant: BOSTON CONTRACT

CARRIER, INC., P.O. Box 68, Brookline, MA 02167. Representative: Alan Bernson (same address as applicant). To operate as a *common carrier*, by motor vehicle, in interstate or foreign commerce, over irregular routes, transporting (1) *greeting cards* (except commodities in bulk), (2) *paper products* (except commodities in bulk), and (3) *equipment, materials, and supplies* used in the manufacture and distribution of the commodities named in (1) and (2) above, (except commodities in bulk), between the facilities of Colourpicture Publishers Inc., at Nashua, NH, and Boston, MA, on the one hand, and, on the other, points in the United States (except AK and HI). (Hearing Site: Boston, MA, or Washington DC.)

Note.—Dual operations may be involved.

MC 146491F, filed February 26, 1979. Applicant: ABC TRANSFER & DELIVERY, INC., 3242 S.W. 2nd Avenue, Portland, OR 97201. Representative: Lawrence V. Smart, Jr., 419 N.W. 23rd Avenue, Portland, OR 97210. To operate as a *common carrier*, by motor vehicle, in interstate or foreign commerce, over irregular routes, transporting *such commodities* as are dealt in or used by retail discount stores, between points in OR and WA, restricted to the transportation of traffic originating at or destined to the facilities of Bi-Mart Company. (Hearing Site: Eugene or Portland, OR.)

[FR Doc. 79-20782 Filed 7-5-79; 8:45 am]
BILLING CODE 7035-01-M

Sunshine Act Meetings

Federal Register
Vol. 44, No. 131
Friday, July 6, 1979

This section of the FEDERAL REGISTER contains notices of meetings published under the "Government in the Sunshine Act" (Pub. L. 94-409) 5 U.S.C. 552b(e)(3).

CONTENTS

	Items
Civil Aeronautics Board	1
Federal Communications Commission	2
Federal Deposit Insurance Corporation	3, 4
Federal Election Commission	5
Federal Maritime Commission	6
Federal Mine Safety and Health Review Commission	7
Federal Reserve System	8
Federal Trade Commission	9-11
Nuclear Regulatory Commission	12, 13
Occupational Safety and Health Review Commission	14
Securities and Exchange Commission	15

1

[M-231, Amdt. 7; July 2, 1979]

CIVIL AERONAUTICS BOARD.

Notice of deletion of item from the July 3, 1979, meeting agenda.

TIME AND DATE: 10 a.m., July 3, 1979.

PLACE: Room 1011, 1825 Connecticut Avenue NW., Washington, D.C. 20428.

SUBJECT: 15. Dockets 29525 and 30332: Disposition of the Board's tentative findings in Order 76-11-9, which would apply the domestic substitute service rules to the U.S. legs of international air freight movements; IATA agreement proposing restrictions on the use of surface transportation on the U.S. legs of South Pacific air freight movements. (Memo 1379-F, 1379-G).

STATUS: Closed.

PERSON TO CONTACT: Phyllis T. Kaylor, the Secretary (202) 673-5068.

SUPPLEMENTARY INFORMATION: A meeting with the General Director this morning resulted in a decision to instead submit, in the near future, a memorandum outlining the Board's options on this matter and, pursuant to a closed meeting with the Board, submission of a redrafted order reflecting the Board's instructions. Accordingly, the following Members have voted that agency business requires the deletion of Item 15 from the July 3, 1979 agenda and that no earlier announcement of this deletion was possible:

Marvin S. Cohen, Chairman.
Richard J. O'Melia, Member.
Elizabeth E. Bailey, Member.
Gloria Schaffer, Member.

[S-1334-79 Filed 7-3-79; 3:04 pm]

BILLING CODE 6320-01-M

2

FEDERAL COMMUNICATIONS COMMISSION.

TIME AND DATE: 9 a.m., Friday, June 29, 1979.

PLACE: Room 856, 1919 M Street NW., Washington, D.C.

STATUS: Emergency closed meeting.

CHANGES IN THE MEETING: Additional item considered.

Internal personnel matters.

The prompt and orderly conduct of Commission business did not permit announcement of this meeting prior to the meeting.

Additional information concerning this meeting may be obtained from the FCC Public Affairs Office, telephone number (202) 632-726.

Issued: July 2, 1979.

[S-1335-79 Filed 7-3-79; 3:43 pm]

BILLING CODE 6712-01-M

3

FEDERAL DEPOSIT INSURANCE CORPORATION.

Notice of changes in subject matter of agency meeting.

Pursuant to the provisions of subsection (e)(2) of the "Government in the Sunshine Act" (5 U.S.C. 552b(e)(2)), notice is hereby given that at its open meeting held at 10:00 a.m. on Monday, July 2, 1979, the Corporation's Board of Directors determined, on motion of Chairman Irvine H. Sprague, seconded by Charles F. Muckenfuss, III, acting in the place and stead of Director John G. Heimann (Comptroller of the Currency), that Corporation business required the addition of the following matters to the agenda for consideration at the meeting, on less than seven days' notice to the public:

A recommendation with respect to payment for legal services rendered and expenses incurred by the firm of Francis & Doval, Hato Rey, Puerto Rico, in connection with the liquidation of Banco Credito y Ahorro Ponceno, Ponce, Puerto Rico.

Resolution regarding Regional Director Stathos' retirement.

The Board further determined, by the same majority vote, that no earlier notice of the changes in the subject matter of the meeting was practicable.

Dated: July 2, 1979.

Federal Deposit Insurance Corporation.
Hannah R. Gardiner,
Assistant Secretary.

[S-1326-79 Filed 7-3-79; 10:37 am]

BILLING CODE 6714-01-M

4

FEDERAL DEPOSIT INSURANCE CORPORATION.

Notice of Change in Subject Matter of Agency Meeting.

Pursuant to the provisions of subsection (e)(2) of the "Government in the Sunshine Act" (5 U.S.C. 552(b)(2)), notice is hereby given that at its closed meeting held at 10:30 a.m. on Monday, July 2, 1979, the Corporation's Board of Directors determined, on motion of Chairman Irvine H. Sprague, seconded by Mr. Charles F. Muckenfuss, III, acting in the place and stead of Director John G. Heimann, (Comptroller of the Currency), that Corporation business required the withdrawal of the following matter from the agenda for consideration at the meeting, on less than seven days' notice to the public:

Item No. V. a notice of acquisition of control regarding Deposit Bank of Pleasureville, Pleasureville, Kentucky.

The Board further determined, by the same majority vote, that no earlier notice of the change in the subject matter of the meeting was practicable.

Dated: July 2, 1979.

Federal Deposit Insurance Corporation.
Hannah R. Gardiner,
Assistant Secretary.

[S-1327-79 Filed 7-3-79; 10:37 am]

BILLING CODE 6714-01-M

5

FEDERAL ELECTION COMMISSION.

DATE AND TIME: Wednesday, July 11, 1979, at 10 a.m.

PLACE: 1325 K Street NW., Washington, D.C.

STATUS: Portions of this meeting will be open to the public and portions will be closed.

MATTERS TO BE CONSIDERED:

Index pricing policy.
Presidential review manual.
Final audit report—the Federal Campaign Committee of Nevada.

Portions Closed to the Public

Compliance Personnel. Labor/management relations.

* * * * *

DATE AND TIME: Thursday, July 12, 1979, at 10 a.m.

STATUS: Portions of this meeting will be open to the public and portions will be closed.

MATTERS TO BE CONSIDERED:

Setting of dates for future meetings.
Correction and approval, of minutes.
Advisory opinions:
AO 1979-24 Ronald R. Hein, (Ron Hein for Congress).
AO 1979-30 Michael Flanary, Democratic Party of Virginia.
AO 1979-33 Miriam L. Gafni (District 1199-C Political Action Fund).
Commission bookkeeping manual. 1980 election and related matters: presidential monthly status report.
Reports analysis policies:
A. Threshold for reviewing Presidential disclosure reports.
B. Recommendations for reducing the RAD backlog.
Pending legislation.
Appropriations and budget.
Classification actions.
Routine administrative matters.

Portions closed to the public

Any matters not concluded on July 11, 1979.

PERSON TO CONTACT FOR INFORMATION: Mr. Fred S. Eiland, Public Information Officer, telephone 202-523-4065.

Marjorie W. Emmons,
Secretary to the Commission.

[S-1339-79 Filed 7-3-79; 4:12 pm]
BILLING CODE 6715-01-M

6

FEDERAL MARITIME COMMISSION.

TIME AND DATE: 10 a.m., July 11, 1979.

PLACE: Room 12126, 1100 L Street NW., Washington, D.C. 20573.

STATUS: Open.

MATTERS TO BE CONSIDERED: Portions open to the public:

1. Agreement No. 10320-1: Modification of a cargo revenue pooling and sailing arrangement in the trade from Brazil to the United States Gulf to provide for participation of nonnational flag lines.
2. Matson Navigation Company—Overall 2.9 percent rate increase between U.S. Pacific Coast ports and Hawaii.
3. Docket No. 78-53: Independent Ocean Freight Forwarder Bids on Government Shipments United States Ports—Proposed final rules.

CONTACT PERSON FOR MORE INFORMATION: Francis C. Hurney, Secretary, (202) 523-5725.

[S-1329-79 Filed 7-3-79; 10:43 am]
BILLING CODE 6730-01-M

7

FEDERAL MINE SAFETY AND HEALTH REVIEW COMMISSION.

July 3, 1979.

TIME AND DATE: 10 a.m., July 11, 1979.

PLACE: Room 600, 1730 K Street NW., Washington, D.C.

STATUS: Open.

MATTERS TO BE CONSIDERED: The Commission will consider and act upon the following:

1. Hilo Coast Processing Company, DENV 79-50-M, etc (Petition for Discretionary Review).
2. Shamrock Coal Company, BARB 76X656-P, etc., and Greenwood Land & Mining Company, BARB 76X552-P.
3. Cambridge Mining Corporation, DENV 77-7-P, IBMA 77-50.

CONTACT PERSON FOR MORE INFORMATION: Jean Ellen, 202-653-5632.

[S-1330-79 Filed 7-3-79; 10:52 am]
BILLING CODE 6820-12-M

8

BOARD OF GOVERNORS OF THE FEDERAL RESERVE SYSTEM.

TIME AND DATE: 11 a.m., Tuesday, July 10, 1979.

PLACE: 20th Street and Constitution Avenue NW., Washington, D.C. 20551.

STATUS: Closed.

MATTERS TO BE CONSIDERED:

1. Request by the General Accounting Office for Board comment on a draft report entitled "Considerable Increase in Foreign Banking in the United States since 1972".
2. Personal actions (appointments, promotions, assignments, reassignments, and salary actions) involving individual Federal Reserve System employees.
3. Any agenda items carried forward from a previously announced meeting.

CONTACT PERSON FOR MORE INFORMATION: Mr. Joseph R. Coyne, Assistant to the Board: (202) 452-3204.

Dated: July 2, 1979.
Theodore K. Allison
Secretary of the Board.

[S-1328-79 Filed 7-3-79; 10:37 am]
BILLING CODE 6210-01-M

9

FEDERAL TRADE COMMISSION.

TIME AND DATE: 1 p.m., Tuesday, July 10, 1979.

PLACE: Room 432, Federal Trade Commission Building, 6th Street and Pennsylvania Avenue NW., Washington, D.C. 20580.

STATUS: Open.

MATTERS TO BE CONSIDERED:

Oral presentation of amendment to the holder in due course trade regulation rule.

CONTACT PERSON FOR MORE INFORMATION: Ira J. Furman, Office of Public Information: (202) 523-3830, recorded message 202-523-3806.

[S-1331-79 Filed 7-3-79; 3:08 pm]
BILLING CODE 6750-01-M

10

FEDERAL TRADE COMMISSION.

TIME AND DATE: 10 a.m., Wednesday, July 11, 1979.

PLACE: Room 432, Federal Trade Commission Building, 6th Street and Pennsylvania Avenue NW., Washington, D.C. 20580.

STATUS: Open.

MATTERS TO BE CONSIDERED:

Consideration of proposed guidelines on the use of endorsements and testimonials in advertising, File No. G51103.

CONTACT PERSON FOR MORE INFORMATION: Ira J. Furman, Office of Public Information: (202) 523-3830, recorded message 202-523-3806.

[S-1332-79 Filed 7-3-79; 3:08 pm]
BILLING CODE 6750-01-M

11

FEDERAL TRADE COMMISSION.

TIME AND DATE: 2 p.m., Wednesday, July 11, 1979.

PLACE: Room 532, (open); Room 540 (closed) Federal Trade Commission Building, 6th Street and Pennsylvania Avenue NW., Washington, D.C. 20580.

STATUS: Parts of this meeting will be open to the public. The rest of the meeting will be closed to the public.

MATTERS TO BE CONSIDERED: Portions open to public:

(1) Oral argument in Herbert R. Gibson, Sr., et al., Docket 9016.

Portions closed to the public:

(2) Executive session to discuss oral argument in Herbert R. Gibson, Sr., et al., Docket 9016.

CONTACT PERSON FOR MORE INFORMATION: Ira J. Furman, Office of Public Information: (202) 523-3830, recorded message 202-523-3806.

[S-1333-79 Filed 7-3-79; 3:08 pm]
BILLING CODE 6750-01-M

12

NUCLEAR REGULATORY COMMISSION.

TIME AND DATE: Week of July 2, 1979 (addition items).

PLACE: Commissioners' Conference Room, 1717 H Street NW., Washington, D.C.

STATUS: Open and closed.

MATTERS TO BE CONSIDERED:

Tuesday, July 3, 1:30 p.m.—

1. Affirmation of order regarding request for hearing in Davis-Besse (5 minutes—public meeting).
2. Discussion of personnel matter (approximately 1½ to 2 hours) (closed—exemption 6).

Thursday, July 5, 10:30 a.m. (Approximately)—

2. Commission meeting on staff review of operation of Davis-Besse (approximately 1 hour—public meeting).

CONTACT PERSON FOR MORE INFORMATION: Walter Magee, (202) 634-1410.

Walter Magee,

Office of the Secretary.

July 3, 1979.

[S-1337-79 Filed 7-3-79; 3:52 pm]

BILLING CODE 7590-01-M

13

NUCLEAR REGULATORY COMMISSION.

TIME AND DATE: Week of July 9, 1979.

PLACE: Commissioners' Conference Room, 1717 H Street NW., Washington, D.C.

STATUS: Closed.

MATTERS TO BE CONSIDERED:

Monday, July 9, 1:30 p.m.

Discussion of personnel matter (approximately 2 hours closed—exemption 6).

Tuesday, July 10, 9:30 a.m.

Briefing by executive branch on international safeguards (approximately 1½ hours) (closed—exemption 1).

CONTACT PERSON FOR MORE INFORMATION: Walter Magee (202) 634-1410.

Walter Magee,

Office of the Secretary.

July 2, 1979.

[S-1338-79 Filed 7-3-79; 3:52 pm]

BILLING CODE 7590-01-M

14

OCCUPATIONAL SAFETY AND HEALTH REVIEW COMMISSION.

TIME AND DATE: 10 a.m. on July 3, 1979.

PLACE: Room 1101, 1825 K Street NW., Washington, D.C.

STATUS: Because of the subject matter, this meeting will be closed.

MATTERS TO BE CONSIDERED: Internal personnel rules and practices.

CONTACT PERSON FOR MORE INFORMATION: Mrs. Patricia Bausell, (202) 634-4015.

Dated: July 2, 1979.

[S-1325-79 Filed 7-3-79; 10:37 am]

BILLING CODE 7600-01-M

15

SECURITIES AND EXCHANGE COMMISSION.

Notice is hereby given, pursuant to the provisions of the Government in the Sunshine Act, Pub. L. 94-409, that the Securities and Exchange Commission will hold the following meetings during the week of July 9, 1979, in Room 825, 500 North Capitol Street, Washington, D.C.

A closed meeting will be held on Tuesday, July 10, 1979, at 10:00 a.m. An open meeting will be held on Wednesday, July 11, 1979 at 10:00 a.m.

The Commissioners, their legal assistants, the Secretary of the Commission, and recording secretaries will attend the closed meeting. Certain staff members who are responsible for the calendared matters may be present.

The General Counsel of the Commission, or his designee, has certified that, in his opinion, the items, to be considered at the closed meeting may be considered pursuant to one or more of the exemptions set forth in 5 U.S.C. 552b(c)(4)(8)(9)(A) and (10) and 17 CFR 200.402 (a)(8)(9)(i) and (10).

Commissioners Loomis, Evans, Pollack and Karmel determined to hold the aforesaid meeting in closed session.

The subject matter of the closed meeting scheduled for Tuesday, July 10, 1979, at 10:00 a.m., will be:

Formal orders of investigation.
Access to investigate files by Federal, State, or Self-Regulatory Authorities.
Litigation matter.
Settlement of injunctive action.
Settlement of administrative proceedings of an enforcement nature.
Freedom of Information Act appeal.
Institution of administrative proceedings of an enforcement nature.
Institution of injunctive actions.
Consideration of amicus participation.

The subject matter of the open meeting scheduled for Wednesday, July 11, 1979, at 10:00 a.m., will be:

1. Consideration of whether to authorize the issuance and sale of first mortgage bonds, pursuant to Section 6(b) of the Public Utility Holding Company Act of 1935, in the amount of $50 million each by Jersey Central Power & Light Company and Pennsylvania Electric Company, both electric utility subsidiaries of General Public Utilities Corporation, a registered holding company, and to grant an exemption from competitive bidding in connection with such sales. For further information, please contact Grant G. Guthrie at (202) 523-5156.
2. Consideration of whether to propose an amendment to Securities Exchange Act Rule 15b10-12 which exempts certain municipal securities brokers and municipal securities dealers from compliance with the SECO fair practice rules. For further information, please contact Katharine S. Emmons at (202) 755-2946.

At times changes in commission priorities require alterations in the scheduling of meeting items. For further information and to ascertain what, if any, matters have been added, deleted or postponed, please contact: Mike Rogan at (202) 755-1638.

July 3, 1979.

[S-1336-79 Filed 7-3-79; 3:43 pm]

BILLING CODE 8010-01-M

Reader Aids

Federal Register
Vol. 44, No. 131
Friday, July 6, 1979

INFORMATION AND ASSISTANCE

Questions and requests for specific information may be directed to the following numbers. General inquiries may be made by dialing 202-523-5240.

Federal Register, Daily Issue:

202-783-3238	Subscription orders (GPO)
202-275-3054	Subscription problems (GPO)
	"Dial-a-Reg" (recorded summary of highlighted documents appearing in next day's issue):
202-523-5022	Washington, D.C.
312-663-0884	Chicago, Ill.
213-688-6694	Los Angeles, Calif.
202-523-3187	Scheduling of documents for publication
523-5240	Photo copies of documents appearing in the Federal Register
523-5237	Corrections
523-5215	Public Inspection Desk
523-5227	Finding Aids
523-5235	Public Briefings: "How To Use the Federal Register."

Code of Federal Regulations (CFR):

523-3419	
523-3517	
523-5227	Finding Aids

Presidential Documents:

523-5233	Executive Orders and Proclamations
523-5235	Public Papers of the Presidents, and Weekly Compilation of Presidential Documents

Public Laws:

523-5266 -5282	Public Law Numbers and Dates, Slip Laws, U.S. Statutes at Large, and Index
275-3030	Slip Law Orders (GPO)

Other Publications and Services:

523-5239	TTY for the Deaf
523-5230	U.S. Government Manual
523-3408	Automation
523-4534	Special Projects

FEDERAL REGISTER PAGES AND DATES, JULY

38437-38816 2
38817-39150 3
39151-39370 5
39371-40050 6

CFR PARTS AFFECTED DURING JULY

At the end of each month, the Office of the Federal Register publishes separately a list of CFR Sections Affected (LSA), which lists parts and sections affected by documents published since the revision date of each title.

1 CFR
305 38817
480 38826

3 CFR
Administrative Orders:
Presidential Determinations:
No. 73-10 of Jan. 2, 1973 (Amended by No. 79-11 of June 21, 1979) 38437
No. 79-11 of June 21, 1979 38437

5 CFR
711 39371

7 CFR
2 38439
26 38439
301 38829
900 39151
908 39151
910 39371
917 38447
930 39152
947 38830
948 38829
958 39152
967 38830
1700 39372
1701 39372
1803 38440
1822 38440
1823 38440
1872 38440
1901 38440
1902 38440
1933 38440
1942 ..... 38440, 38831
1943 38440
1945 38440
1955 38440
Proposed Rules:
Ch. IX 39413
1 39409
210 40004
220 40004
226 ..... 39078, 39413
924 38531
947 38531
1804 39432
1924 39432

8 CFR
Proposed Rules:
103 39183

9 CFR
82 39374
204 39151

10 CFR
205 39375
430 39153
460 40044
490 39344
Proposed Rules:
25 38533
95 38533
490 39467
903 39184

11 CFR
100 39338
110 39338
114 39338

12 CFR
265 38448
340 39381
541 39108
542 39108
543 39108
544 39108
545 39108
546 39108
547 39108
548 39108
549 39108
551 39108
552 39108
555 39108
556 39108
701 ..... 39182, 39382, 39383
Proposed Rules:
Ch. VII 38560
103 39183
206 38543
340 39469

14 CFR
39 ..... 39153, 39154
71 ..... 38449, 38450, 39154, 39155
73 38450
95 39155
300 39384
1214 39384
Proposed Rules:
61 38563
63 38563
71 ..... 38566-38569, 39191

15 CFR
30 38832

16 CFR

13 ..... 38451, 38833
1209 ..... 39938, 39983
1404 39993

Proposed Rules:

Ch. II 38854
13 39191
423 38570
1201 38857
1700 39195

17 CFR

230 38810
240 38810
249 39386
250 38810
260 38810

Proposed Rules:

231 38792
239 39196
241 38792
251 38792
270 39197

18 CFR

154 38834
287 38837

Proposed Rules:

Ch. I 38857
292 ..... 38863, 38872

19 CFR

159 38839

Proposed Rules:

141 38571

20 CFR

404 38452
416 38456
725 38840

Proposed Rules:

404 38879
416 38879

21 CFR

193 38841
522 39387
556 39388
558 39387
561 38841

Proposed Rules:

203 40016
433 39469

22 CFR

42 38842

Proposed Rules:

7 39473
50 39473
51 39473

24 CFR

510 38842
2205 39198

Proposed Rules:

Subtitle A 38572
Subtitle B 38572
58 38572

26 CFR

1 38458

Proposed Rules:

1 ..... 39200, 39201, 39476, 39477
31 ..... 38572, 39477

27 CFR

201 39389

Proposed Rules:

201 38573

28 CFR

2 38459

29 CFR

850 38459
1627 38459

Proposed Rules:

524 38910
525 38910

31 CFR

515 38843

32 CFR

1289 38461
1810 39390

Proposed Rules:

701 38910

33 CFR

165 38470

36 CFR

1228 39332

39 CFR

111 ..... 39471, 39852
233 39161
242 39855
243 39855
247 39855
248 39855
257 39855
258 39855

40 CFR

35 39328
52 ..... 38471, 38473, 38843
65 ..... 38476, 38477
80 39390
180 38843–38845
434 39391

Proposed Rules:

35 38575
52 ..... 38578, 38587, 38912, 39234, 39480–39485
65 38603
81 ..... 38585, 38587, 39486
120 39486
425 38746
1500 ..... 39233, 39236
1510 ..... 39233, 39236

41 CFR

Ch. I 38478
7–7 39162
7–13 39162
101–19 39392
101–27 39393

Proposed Rules:

14R–9 39201

44 CFR

67 ..... 39165–39175, 39394–39403

Proposed Rules:

67 ..... 39230, 39231, 39508

45 CFR

1069.4 38479
116a 39404

Proposed Rules:

Ch. XII 38607
71 38605
233 38606
1110 39509

46 CFR

25 38778
33 38778
35 38778
75 38778
78 38778
94 38778
97 38778
108 38778
109 38778
161 38778
164 38778
167 38778
180 38778
185 38778
192 38778
196 38778
505 39176

Proposed Rules:

536 ..... 38913, 39232
538 39232
552 39232

47 CFR

0 39179
1 ..... 38481, 39179
2 39179
18 39179
68 38847
73 ..... 38481, 38845, 38848, 39179
81 ..... 38848, 39179
83 ..... 38848, 39179
87 39179
94 39179

Proposed Rules:

1 38913
64 39513
73 ..... 38917, 39550
76 38918
90 39555

48 CFR

Proposed Rules:

3 38608
30 38608
31 38608
50 38608

49 CFR

396 38523
831 39181
845 39181
1033 ..... 38844, 38850, 39405–39407
1082 38527
1125 38851

Proposed Rules:

Ch. X 38609, 39555
222 38608
229 38609
230 38609
1011 39558
1056 38918
1100 39558
1127 39560

50 CFR

26 38852
32 39408
285 39182
653 38529

Proposed Rules:

17 38611
611 39564

AGENCY PUBLICATION ON ASSIGNED DAYS OF THE WEEK

The following agencies have agreed to publish all documents on two assigned days of the week (Monday/Thursday or Tuesday/Friday). This is a voluntary program. (See OFR NOTICE FR 32914, August 6, 1976.)

Monday	Tuesday	Wednesday	Thursday	Friday
DOT/SECRETARY*	USDA/ASCS		DOT/SECRETARY*	USDA/ASCS
DOT/COAST GUARD	USDA/APHIS		DOT/COAST GUARD	USDA/APHIS
DOT/FAA	USDA/FNS		DOT/FAA	USDA/FNS
DOT/FHWA	USDA/FSQS		DOT/FHWA	USDA/FSQS
DOT/FRA	USDA/REA		DOT/FRA	USDA/REA
DOT/NHTSA	MSPB/OPM		DOT/NHTSA	MSPB/OPM
DOT/RSPA	LABOR		DOT/RSPA	LABOR
DOT/SLS	HEW/FDA		DOT/SLS	HEW/FDA
DOT/UMTA			DOT/UMTA	
CSA			CSA	

Documents normally scheduled for publication on a day that will be a Federal holiday will be published the next work day following the holiday.

Comments on this program are still invited. Comments should be submitted to the Day-of-the-Week Program Coordinator, Office of the Federal Register, National Archives and Records Service, General Services Administration, Washington, D.C. 20408

*NOTE: As of July 2, 1979, all agencies in the Department of Transportation, will publish on the Monday/Thursday schedule.

REMINDERS

The items in this list were editorially compiled as an aid to Federal Register users. Inclusion or exclusion from this list has no legal significance. Since this list is intended as a reminder, it does not include effective dates that occur within 14 days of publication.

Rules Going Into Effect Today

FEDERAL COMMUNICATIONS COMMISSION

32377 6-6-79 / Expanding frequencies for cable television relay service and set aside band 13.15–13.20 GHz

34133 6-14-79 / Television and cable television relay service stations; number of frequencies expanded

Rules Going Into Effect July 7, 1979

AGRICULTURE DEPARTMENT

Office of the Secretary—

26845 5-8-79 / Commercial sales of agricultural commodities; supplier reporting requirements

Rules Going Into Effect July 8, 1979

AGRICULTURE DEPARTMENT

Agricultural Marketing Service—

32194 6-5-79 / Administrative provisions for handling of hops of domestic production

List of Public Laws

Note: No public bills which have become law were received by the Office of the Federal Register for inclusion in today's List of Public Laws.

Last Listing July 5, 1979

NOW AVAILABLE

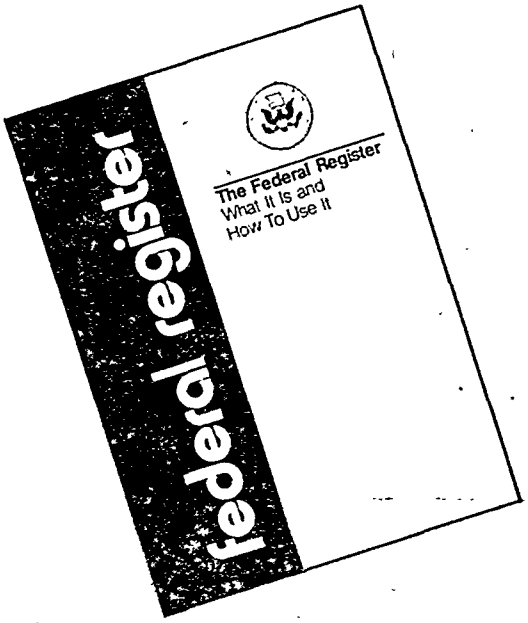

THE FEDERAL REGISTER: WHAT IT IS AND HOW TO USE IT

A Guide for the User of the Federal Register—
Code of Federal Regulations System

This handbook contains a narrative version of the main elements of the educational workshops conducted by the Office of the Federal Register. For those persons unable to attend a workshop, this handbook will provide helpful information for using the FEDERAL REGISTER and related publications.

MAIL ORDER FORM To: Superintendent of Documents, U.S. Government Printing Office, Washington, D.C. 20402

Enclosed find $..... (check, money order). Please send me ..... copies of THE FEDERAL REGISTER—WHAT IT IS AND HOW TO USE IT, *at $2.40 per copy. (Stock No. 022-003-00953-1)*

Please charge this order to my Deposit Account No. .....

Name .....

Street address .....

City and State ..... ZIP Code .....

FOR USE OF SUPT. DOCS.
.....Enclosed.....
To be mailed later.....
.....Subscription.....
Refund.....
Postage.....
Foreign handling .....

☆ GPO: 1977—O-248-007

FOR PROMPT SHIPMENT, PLEASE PRINT OR TYPE ADDRESS ON LABEL BELOW INCLUDING YOUR ZIP CODE

U.S. GOVERNMENT PRINTING OFFICE
SUPERINTENDENT OF DOCUMENTS
WASHINGTON, D.C. 20402

OFFICIAL BUSINESS

POSTAGE AND FEES PAID
U.S. GOVERNMENT PRINTING OFFICE
375
SPECIAL FOURTH-CLASS RATE
BOOK

Name .....

Street address .....

City and State ..... ZIP Code .....

7-6-79
Vol. 44—No. 131
BOOK 2:
PAGES
39739-40050

federal register

Book 2 of 2 Books
Friday, July 6, 1979

Part II—PS:
Domestic Mail Manual

Part III—CPSC/EPA/FDA/FSQS:
Bases for Identifying Carcinogens and Estimation of Risks

Part IV—Labor/ESA:
Minimun Wage Notice

Part V—CPSC:
Cellulose Insulation

Part VI—USDA/FNS:
School Lunch and Breakfast Program

Part VII—HEW/FDA:
Prescription Drug Products

Part VIII—DOE/ERA:
Grants Program

federal register

Friday
July 6, 1979

Part II

Postal Service

Establishment of the Domestic Mail Manual

POSTAL SERVICE

39 CFR Part 111

Establishment of the Domestic Mail Manual to Replace Chapter 1 of the Postal Service Manual

AGENCY: Postal Service.

ACTION: Final rule.

SUMMARY: This rule replaces chapter 1 of the Postal Service Manual and certain other regulations relating to domestic postal services, with the newly revised, renumbered and renamed Domestic Mail Manual. The purpose of this revision is to set forth in the Domestic Mail Manual the postal regulations concerning the domestic services offered to the public by the Postal Service in a more convenient and understandable style and format than that used in the Postal Service Manual. The bulk of the changes involve the reorganization and renumbering of present regulations, the removal of regulations which set forth internal operating procedures, and the rewriting of regulations in a narrative style addressed to the public. However, new regulations have also been adopted which provide further explanation of current regulations, incorporate existing administrative procedures and policies of the Postal Service, or, in some cases, set forth substantive changes to present regulations.

EFFECTIVE DATE: July 30, 1979, except that:

(1) The changes in Domestic Mail Manual sections 622 and 681.2 concerning the bulk third-class mailing of nonidentical size and weight pieces and the methods of ascertaining and verifying postage on such pieces became effective August 6, 1978 (43 FR 32293);

(2) The change in 623.52 requiring a certification on Form 3602 or 3602-PC concerning cooperative mailings of special rate bulk third-class mail became effective September 1, 1978 (43 FR 28199);

(3) The change in 464.6g permitting the combination of second-class publications to meet the second-class per piece presort rate requirements became effective September 5, 1978 (43 FR 39583);

(4) The change in 663.2 concerning the optional preparation procedures for machinable third-class parcels became effective September 7, 1978 (43 FR 39995);

(5) The changes in 155.1, 155.2 and 155.41 prescribing the Postal Service's policy for offering "city delivery" service to customers residing in family housing to which city delivery service is not normally provided became effective on November 3, 1978 (43 FR 45839);

(6) The change in 627.1 concerning permissible attachments to books and catalogs mailed at third-class rates became effective November 18, 1978 (43 FR 48636);

(7) The change in 322.3 clarifying the requirements and restrictions on the use of postal and post cards became effective December 4, 1978 (43 FR 51016);

(8) The change in 725.4 concerning the mailing of books by publishers and distributors at the fourth-class library rate became effective December 30, 1978 (43 FR 56224);

(9) The change in 115.96 authorizing the recording, for tax collection purposes, of the names and addresses on certain parcel mail in Puerto Rico became effective January 15, 1979 (43 FR 3050);

(10) The changes in 153.1 and 159.1 prohibiting the return of mail as "refused" when it is sent to the addressee in response to the addressee's sales promotion, solicitation, announcement or other advertisement became effective March 29, 1979 (44 FR 11069);

(11) The changes in 144.1, 144.2, 144.3 and 144.9 implementing the computerized remote postage meter resetting system became effective April 12, 1979 (44 FR 21015);

(12) The changes in 642.2 and 643.3 permitting the revocation of a third-class special rate authorization for nonuse became effective May 19, 1979 (44 FR 23220);

(13) The change in 125.2 indicating that mail order catalogs may not be sent as SAM or PAL mail became effective May 19, 1979 (44 FR 23219);

(14) The changes in 411.2, 411.3, 511.2, 611.2, 711.3, and 711.4 incorporating the changes in postage rates resulting from the imposition of the eighth step of phased postage rate increases pursuant to 39 U.S.C. 3626 become effective July 6, 1979 (44 FR 32491);

(15) The changes in 127, 322.2, 352.2, 353.3, 651.21 and 651.22 implementing the new minimum sizes for mail matter and the surcharge for nonstandard mail become effective July 15, 1979 (44 FR 33879); and

(16) The change in 482.4 concerning the establishment of a six-month recalculation schedule for the second-class key rate becomes effective July 16, 1979 (44 FR 34497).

FOR FURTHER INFORMATION CONTACT: For information on the general nature and scope of the rule and for specific information on Chapters 1–8 of the Domestic Mail Manual, contact Phillip T. Bohall, (202) 245–4353.

For specific information on Chapter 9 (Special Services), contact Rick Shaver (202) 245–4566.

SUPPLEMENTARY INFORMATION: On April 25, 1979, the Postal Service published for comment in the Federal Register the proposed replacement of chapter 1 of the Postal Service Manual and certain other regulations with the Domestic Mail Manual as described above (44 FR 24432). Interested persons were invited to submit written comments concerning the proposed replacement by May 25, 1979.

Written comments were received from two publishers, three publishers' associations (two of which filed joint comments) and a trade association for rope and twine manufacturers. Two oral comments were received which indicated a general approval of the Domestic Mail Manual as an improvement over chapter 1 of the Postal Service Manual.

One commenter suggested that, as part of the establishment of the Domestic Mail Manual, the Postal Service amend section 121.341 to specify that it is acceptable to tie packages with twine and cord. Postal regulations already state that, while the tying of packages with twine or cord is not preferred, tied packages are acceptable for mailing. See section 121.344. Accordingly, there is no need to amend section 121.341.

Two commenters questioned the statement in section 411.12 that a Form 3541 must be used to compute postage and be submitted with each mailing of a second-class publication. One commenter noted that that was not always required under computerized computation of postage. The other commenter cited the provision of section 482.1 permitting the submission of a mailing statement once a month. The computerized payment of postage is an optional payment procedure governed by section 145.8. The agreement entered into by the mailer and the Postal Service pursuant to section 145.8 sets forth the methods of computing postage and may supersede section 411.12. In response to the second comment the Postal Service has amended section 411.12 to include a reference to section 482.1.

One commenter asked why it was essential, as stated in section 421.3, that a publication's circulation records be maintained at the known office of publication. The commenter noted that a publisher of more than one publication might "find it more advantageous to maintain circulation records at a central

location." Historically, a second-class publication has been required to be "issued from a known office of publication" and to be entered "at the Post Office where the office of publication is maintained." (See former 9 U.S.C. 4352(a) and 4354(a)(2).) Section 200.0102 of the Domestic Mail Classification Schedule presently requires that:

> Second-class matter must have a known office of publication. A known office of publication is a public office where business of the publication is transacted during the usual business hours. The office must be maintained where the publication is authorized original second-class entry.

Given these requirements and the need of the postal officials at the office of original entry to inspect and verify a publisher's records, it is not unreasonable for the Postal Service to require that the circulation records be maintained at the known office of publication. Section 421.3 is not a substantive change in postal regulations; it only incorporates longstanding policy of the Postal Service. A publisher who has the problem cited by the commenter might want to change the offices of original entry of his publications to one central location or develop duplicate circulation records.

One commenter objected to the statement in section 422.223 that publications are considered primarily designed for free circulation and/or circulation at nominal rates, not only "when one-half or more of all copies circulated are provided free of charge to the ultimate recipients, or are paid for at nominal rates by the ultimate recipients," but also "when other evidence indicates that the intent of the publisher is to circulate the publication free and/or at nominal rates." Historically, publications designed primarily for free circulation or for circulation at nominal rates have not been entiled to second-class mail privileges. (See former 39 U.S.C. 4354(c) and Domestic Mail Classification Schedule § 200.012.) The statement in question was added to section 422.223 to indicate that the two specific tests included in the section do not establish completely unrebuttable presumptions as to when publications are designed primarily for free circulation and/or circulation at nominal rates. The Postal Service does not intend to go beyond the 50% tests in analyzing the intent of publishers unless there are strong grounds for a conclusion that the publication in question is primarily designed for free circulation and/or circulation at nominal rates. For these reasons, we believe section 422.223 should be retained as written.

One commenter agreed with the treatment of public service advertisting in section 422.232b and the inclusion of the special rate eligibility standards in section 422.31.

One commenter questioned the reference in section 422.5 to a "review" of applications for second-class entry by foreign publications. All publications seeking second-class entry must file an application for such entry (see section 441). Applications for foreign publications are "reviewed" by the Postal Service to determine eligibility as are applications for domestic publications. The questioned statement in section 422.5 simply notes that the Postal Service's review will be based only on the United States circulation of the foreign publication. This statement incorporates present postal policy and will remain in section 422.5.

Two commenters objected to the inclusion in section 425.4 of the statement that advertising supplements not produced primarily (more than 50%) for distribution in second-class publications are not permissible supplements in second-class publications. One commenter objected to the requirement that it is incumbent upon publishers to ascertain that advertising supplements which are enclosed in second-class publications meet this test. The other commenter pointed out that the inclusion of these provisions in section 425.4 is contrary to a recent recommendation of the Joint Industry/Postal Service Alternate Delivery Task Force. In developing the Domestic Mail Manual, the Postal Service has tried to produce a document which sets forth, more completely than before, its present administrative policies and practices. The subject material in section 425.4 is a product of that effort because it does state the existing policy of the Postal Service regarding supplements in second-class publications. Supplements have historically been required to be "germane to the publication." (See former 39 U.S.C. 4366.) As noted by the commenter, a change in that policy is under consideration at this time and these comments will be made a part of that consideration. If a decision is made to alter the policy, a change to section 425.4 will be proposed. But for the present, section 425.4 states the existing Postal Service policy and will not be changed in this rulemaking. One of the commenters asserted that supplements sent outside of the mails should not concern the Postal Service because the Private Express Statutes are inapplicable. This issue will not be addressed here because it is irrelevant to the determination of whether a supplement that is mailed is germane to the publication.

Two commenters objected to the limitation in section 425.7o of advertising to protective covers of second-class publications. Both urged the Postal Service to permit advertising on wrappers and envelopes as well. This proposal, which was also recommended by the Joint Industry/Postal Service Alternate Delivery Task Force, is under active consideration at the present time. If that recommendation is adopted by the Postal Service, section 425.7o will be amended to reflect the change.

One commenter objected to the change in section 425.91 from "some or all pages in a periodical may be numbered" to "it is recommended that some or all pages of a periodical be numbered." The commenter fears that this change will be misinterpreted by postal personnel to mean "required." The Postal Service does not believe this will occur. The previous sentence in section 425.91 clearly states that "pagination is not required in periodicals." The subject change was made in an attempt to make the Postal Service's position as clear as possible. Section 425.9 will be left as proposed.

One commenter noted that sections 426.12 and 426.14 appear to run counter to certain recent changes in Postal Service regulations dealing with the marking of sample copies. These changes occurred after the cutoff date for publication of the proposed rule and have been incorporated in the final rule.

On the grounds that it is burdensome and irrelevant, one commenter objected to the requirement in section 426.2 that a publisher must be able to provide information to the Postal Service when he furnishes copies of a publication free to the addressee. The Postal Service agrees and has deleted that provision from the final rule.

One commenter objected to the "apparent change in policy" in section 426.4 which limits exchange copies to one copy for each publisher. This limitation is not new, but is existing postal policy that is being incorporated in the Domestic Mail Manual. The reason for the policy is that the mailing of exchange copies at regular second-class rates instead of the nonsubscriber rates is an exception to the general requirement that nonsubscriber copies must pay the appropriate nonsubscriber rate. In order to prevent abuse, the Postal Service limits exchange copies to one for each publisher to whom exchange copies are sent.

Two commenters objected to the distinction made in sections 426.1 and 426.6 between sample copies and complimentary copies. Historically, publishers have been permitted to mail up to 10 percent of their publications as sample copies at the regular second-class rates instead of the nonsubscriber rates. (See former 39 U.S.C. § 4362.) The clear purpose of this exception is to permit publishers to mail a reasonable number of sample copies to prospective subscribers. Complimentary copies, however, are copies distributed free by publishers, normally over a longer course of time than sample copies, for purposes other than the solicitation of subscriptions. The Postal Service does not believe such copies should receive regular rate treatment. This policy is supported by section 200.044 of the Domestic Mail Classification Schedule. This distinction has been preserved in the final rule. In addition, section 426.6 indicates that complimentary copies must be mailed at the nonsubscriber rates and refers the reader to section 411.4 which sets forth the two available nonsubscriber rates.

Three commenters voiced concern about the "ambiguous impact" of the second-class mail service objectives provisions in section 430. They asserted that section 430 inadequately described the nature of "newspaper treatment" and asked that the language be clarified to explain what changes, if any, would be made by the promulgation of section 430. All three commenters objected to the Postal Service's decision not to include in the Domestic Mail Manual the processing regulations concerning newspaper treatment presently in Postal Service Manual §§ 125.42–125.45. In addition, one commenter questioned whether " 'newspaper treatment' which has heretofore been a discretionary method of handling certain second-class publications, has become *'a level of service* which provides expeditious distribution, dispatch, transit handling, and delivery * * *.' "

In formulating the structure and scope of the Domestic Mail Manual, the Postal Service decided to include a Service Objectives subchapter for each class of mail. These subchapters were designed to provide an appropriate location for existing service regulations, such as those on newspaper treatment and the delivery guarantee provisions for Express Mail, and to inform the public more fully of the service features of each class of mail. The inclusion of this information in the Domestic Mail Manual is consonant with similar provisions in the Domestic Mail Classification Schedule (see §§ 100.06, 250.06, 300.06, 400.06, and 500.06). The statement that "the Postal Service does not guarantee the delivery of (a particular class of mail) within a specified time" was included in all the class of mail chapters except chapter 2, Express Mail, in order to (1) fully inform the public of this fact, (2) provide a comparative statement to the delivery guarantees set forth for Express Mail, and (3) establish a clear legal standard for purposes of future litigation. This is the basis for the language in section 431. The Postal Service does not intend for that language to indicate any change in the service it provides to second-class mail and no change will occur as a result of the adoption of the Domestic Mail Manual.

Likewise, the Postal Service did not intend for any substantive change to result from the replacement of Postal Service Manual § 125.4 with Domestic Mail Manual § 432. In keeping with the policy set forth in the proposed rule and in the Summary above, the Postal Service did not include in the Domestic Mail Manual those provisions of Postal Service Manual § 125.4 which set forth internal operating procedures of the Postal Service. However, those procedures have not and will not be changed as a result of the adoption of the Domestic Mail Manual. Furthermore, they have been published in even greater detail in section 435 of the Postal Operations Manual, one of the companion functional manuals to the Domestic Mail Manual, which may be purchased from the Superintendent of Documents, Washington, D.C. 20402.

The Postal Service did not intend for any change to be made in newspaper treatment as a result of this rulemaking. In light of the comments and in order to avoid any possible misunderstanding, the Postal Service has revised sections 431 and 432 to conform with the present language used in Postal Service Manual § 125.4.

One commenter indicated that the explanation of the second-class application procedure in section 441.1 was much clearer.

One commenter noted that the change in section 444.1 which does not require a reentry for publisher relocations within the area served by the same post office is an improvement over the present rule.

One commenter objected to the "short haul" limitation on eligibility for exceptional dispatch in section 445.1. Exceptional dispatch provides for the delivery of copies of a second-class publication by the publisher to other post offices within the local area of the entry post office. Exceptional dispatch is authorized by the postmaster of the entry post office and postage on the copies using exceptional dispatch is still paid at the entry post office. On the other hand, additional entry provides for the delivery of copies of a second-class publication by the publisher to post offices outside the local area of the original entry post office. Additional entries must be authorized by the Director of the Office of Mail Classification and postage on the copies delivered to the additional entry office is paid at that office, not the office of original entry. Because of these distinctions and the need to maintain local control over exceptional dispatch mailings, the "short haul" limitation on eligibility for exceptional dispatch is essential. Otherwise, publishers might use exceptional dispatch to circumvent the requirements pertaining to additional entry.

One commenter objected to the additional of the phrase "and not to add to USPS costs" in section 445.3. Exceptional dispatch is permitted by the Post Service to enable a publisher to improve the service he receives from the Postal Service. Exceptional dispatch is predicated on the fact that the alternate distribution is done "at the publisher's own *expense* and risk" (section 445.1 (emphasis added)). If the exceptional dispatch also results in an increase in Postal Service costs, it is reasonable for the postmaster to consider whether it meets the requirements of section 445.1. The addition of the subject language is not intended to be a change in Postal Service practice.

One commenter questions whether the addition of examples of the types of records a publisher should maintain in section 447.3 might cause local postmasters to require that those exact records be kept. Section 447 was expanded in an effort to provide more complete information to second-class mailers on the records they are required to maintain for postal purposes and to facilitate more consistent Postal Service verification of publishers' records nationwide. Section 447.3 was added as a guide to publishers of the types of records the Postal Service recommends be kept in order to supply the information required by section 447.2. The Postal Service does not require that any particular system of accounts or types of records be kept by publishers. All that is required is that legible, verifiable records be kept which prove that the publication is entitled to be mailed at second-class rates.

One commenter questioned why it was necessary in section 448 for the Postal Service to increase the amount of information that a publisher must supply

concerning the ownership of a publication. Historically, second-class publishers have been required to furnish detailed information to the Postal Service and the public concerning the ownership of second-class publications. (See former 39 U.S.C. 4369, 39 U.S.C. 3685, *Lewis Publishing Co.* v. *Morgan*, 229 U.S. 288 (1913).) As noted in the explanation to the proposed rule, it is becoming increasingly prevalent for publications to be owned by a corporation which is, in whole or in part, owned by another corporation. In order to be able to continue to obtain detailed ownership information, the Postal Service believes the requirement in section 448.2c is both necessary and reasonable. The commenter also questioned the deletion of the provisions currently in Postal Service Manual § 132.625 which, among other things, provide for postmasters to supply the appropriate forms to publishers. Section 132.625 was deleted because it consists of internal operating instructions of the Postal Service. Forms will still be made available to publishers by the Postal Service not less than 10 days prior to October 1 of each year.

One commenter questions the meaning of the statement in section 462.1 that "publications should not be rolled." The statement is intended as a suggestion to publishers to help them improve the Postal Service's processing of their publications. Section 462.1 does not prohibit the entry of rolled publications as second-class mail. The commenter also states that section 462.3 appears to reduce the number of exceptions where the ZIP Code is not required in addresses on second-class mail. The commenter is correct. The exceptions in Postal Service Manual § 125.325 which were inadvertently left out of the proposed rule have been added to section 462.3 in the final rule.

One commenter suggested that section 463.6 requiring the marking of sample copies using simplified address be deleted. It has been deleted in the final rule in conjunction with the changes to sections 426.12 and 426.14 discussed above.

One commenter indicated that the use of identification numbers authorized by section 464.1 was a beneficial change. The commenter suggested that the minimum sack requirement for the second-class per piece presort discount be reduced and that exhibit 464 be improved. The proposal to change the presort sacking requirements is beyond the intended scope of this rulemaking and has not been adopted. Exhibit 464 was simply carried over from the Postal Service Manual; its modification will be considered in the future.

One commenter questioned whether the revised language used in section 464.2 to describe the sacking requirements for second-class mail is a substantive change in the regulations. It is not intended to be a substantive change. The new language is intended to define more precisely the quantity of mail required for sacking and to avoid confusion about what "one-third of a sack" means. 1,000 cubic inches is equivalent to the former measurement of "one-third of a number 2 sack." The present practice of permitting "skin sacks" and one-third full sacks is not changed by this rulemaking.

One commenter questioned why the sacking requirements for mail sent to military post offices overseas set forth in section 464.5 are different from those for domestic mail. This is an historical difference which was simply transferred to the Domestic Mail Manual. Changes in the military requirements are under consideration at this time and, if adopted, will be published as a change to section 464.5.

Two commenters were confused by the postage payment provisions in section 481 for non-commingled nonsubscriber copies. The reference to paying postage on those copies by permit imprint was added as a convenience for mailers who are authorized to use a permit imprint. The imprint can be printed or hand-stamped on the copies.

One commenter stated that section 482.1 should be cross referenced to section 411.12. The Postal Service believes that section 482.1 is clear as it is written. The commenter also notes that exhibit 482 was missing from the proposed rule. That exhibit is included in the final rule and is simply an update of the exhibits to Postal Service Manual § 125.74.

One commenter stated that it was not clear whether section 491 represented a change in existing Postal Service policy. No change is intended by section 491 except that section 491.22 was added to state the effect of a failure to guarantee forwarding postage.

One commenter suggested that the Postal Service should consider revising section 570 to extend the exceptional dispatch option to controlled circulation publications. This proposal is beyond the scope of this rulemaking and, therefore, was not adopted. However, it will be considered by the Postal Service as a suggestion for a future change.

One commenter added a general comment that it was concerned that the broad revision undertaken by the Postal Service in proposing the Domestic Mail Manual might result in confusion at local post offices and the treatment of many of the regulations in the Domestic Mail Manual as if they constituted substantive changes to the corresponding Postal Service Manual provisions. The Postal Service is making every reasonable effort to protect against such problems. Advance copies of the Domestic Mail Manual have been supplied to Mail Classification Centers for study. The proposed rule detailed which changes were substantive and which were not. In addition, when the Domestic Mail Manual is distributed to postal personnel and public subscribers it will be introduced by a transmittal letter which will explain the changes being made and itemize the substantive changes noted in the proposed rule. The Postal Service believes these steps will greatly reduce the problems that can arise as a result of a regulatory revision of the size and scope of the Domestic Mail Manual.

Any comments which could not be fully addressed in this rulemaking will be referred to the appropriate postal officials for further consideration as suggested changes to postal regulations, practices or polices. The Postal Service is prepared to consider any suggestions from mailers and the general public for changes in these regulations and to solve any problems of administration or interpretation that arise as a result of this rulemaking.

No comments were received concerning the remainder of the substantive changes set forth in the proposed rule. Unless noted below, those changes have been included in the final rule as proposed.

The proposed rule incorporated all amendments made to the pertinent provisions of chapter 1 of the Postal Service Manual which were contained in issue 120, transmittal letter 44, published on September 13, 1978 (43 FR 40810, as amended and corrected, 43 FR 45838), as well as all subsequent amendments which became effective on or before April 3, 1979. The final rule (as discussed below) incorporates additional amendments made to the pertinent provisions of the Postal Service Manual which were left out of the proposed rule or which became effective between April 3, 1979, and June 15, 1979. Any amendments which are made to the pertinent provisions of the Postal Service Manual between June 15, 1979, and the effective date of this rule will be published separately as amendments to the Domestic Mail Manual. See the effective date provision above for a discussion of the changes to

chapter 1 of the Postal Service Manual which have been published in the Federal Register since the publication of issue 120. These changes have all been included in the final rule.

In addition, a number of other changes have been made in the final rule. Those changes are as follows:

(1) Section 111.53 now notes that the subscription price for the Domestic Mail Manual is $17.00.

(2) Sections 116, Release of Information, 117, Privacy of Information, and 118, Privacy of Information—Employee Rules of Conduct, have been deleted. The regulations which would have appeared in those sections will continue to appear in 39 CFR §§ 265, 266 and 268 and will be published in another postal manual, the Administrative Support Manual. The regulations were deleted from the Domestic Mail Manual to avoid unnecessary duplication.

(3) Section 119, Trademarks, Service Marks and Copyrights, has been revised and updated. Controlpak has been dropped from the list of trademarks and service marks in section 119.1 because the service is no longer offered by the Postal Service. International Express Mail and Postique have been added to the list. Section 119.21 now indicates that the Postal Service also secures copyrights in its philatelic designs and the license agreement provisions listed in section 119.22 have been revised.

(4) Section 122.8, Military Mail, has been amended to delete the requirement that mail addressed to military personnel and dependents of military personnel must show the social security number or service number of the armed forces member to whom the mail is addressed. This deletion is made at the request of the Department of Defense for privacy purposes.

(5) Section 423.122 has been amended to correct an omission of part of the section in the proposed rule. It now reads as follows:

.122 Primary Purpose. The standard of *primary purpose* used in the definitions of qualified nonprofit organizations in 423.13 requires that the organization be both organized and operated for the primary purpose. Organizations which *incidentally* engage in qualifying activities do not meet the primary purpose test.

This provision is identical to that proposed for the comparable special bulk third-class rate eligibility section (see 623.22) and does not constitute a substantive change to the Domestic Mail Manual.

(6) Section 462.3, as noted above in the discussion of the comments, has been revised to accurately carry forward the exceptions to the mandatory use of the ZIP Code on second-class mail presently contained in Postal Service Manual § 125.325.

(7) Exhibit 482 has been added to the final rule. It was not ready for publication in the proposed rule. Exhibit 482 is not a substantive change; it simply updates the present exhibits to Postal Service Manual § 125.74.

(8) Sections 664.24 and 763.4a have been revised to reflect the new minimum sizes for mail matter (see section 127).

(9) Section 942.1, Migratory Bird Hunting and Conservation Stamps, has been amended to comply with the provisions of the Wetlands Loan Extension Act of 1976, Pub. L. No. 94–215 (February 17, 1976). The redemption provisions of section 3(c) of Pub. L. No. 94–215 have been incorporated in section 942.15. In addition, section 942.13 has been changed to reflect the current stamp price of $7.50.

(10) A number of nonsubstantive editorial changes and corrections of typographical errors and section references have been made throughout the Domestic Mail Manual.

As in the proposed rule, the text of the Domestic Mail Manual printed in the final rule does not contain those provisions which are not significantly different from their corresponding provisions in the Postal Service Manual. Chapters 3–7 are printed in their entirety. Chapter 2, Express Mail, remains unchanged and is not printed here. With the exception of the additions of sections 122.8 and 942.1 to show the changes made in those sections, the same provisions of chapter 1, Domestic Mail Services, and chapter 9, Special Services, printed in the proposed rule are included here. The rest of the regulations in chapters 1 and 9, which either remain unchanged or have only been renumbered or edited to a minor degree, are not printed in full but are noted by citation in the appropriate location in the final rule.

As noted in the proposed rule and in the Summary above, internal operating procedures of the Postal Service presently contained in chapter 1 of the Postal Service Manual have not been carried forward to the Domestic Mail Manual. Eventually, all of these procedures will be published in other postal manuals and handbooks. Although this final rule replaces chapter 1 of the Postal Service Manual with the Domestic Mail Manual, those internal operating procedures in chapter 1 of the Postal Service Manual not carried forward in the Domestic Mail Manual will remain in full force and effect as internal Postal Service instructions until they are superseded by the publication of other manuals or handbooks.

In addition, the establishment of the Domestic Mail Manual does not affect the validity of the temporary mail classification provisions established pursuant to 39 U.S.C. 3641 for bulk parcel post (44 FR 11228, February 28, 1979), the third-class carrier route presort discount (44 FR 5422, January 26, 1979), and Express Mail Metro Service (44 FR 24844, April 27, 1979). Those temporary classification provisions remain in effect as published. If those proposed classification changes are approved by the Governors of the Postal Service, pursuant to 39 U.S.C. 3625, implementing regulations will be included in the Domestic Mail Manual.

Finally, any changes made to chapter 1 of the Postal Service Manual or sections 111, 242.1, 243.2(a)(2)–(5), 247, 248, 257 or 258 of title 39 CFR between June 15, 1979, and the effective date of this rule will remain in effect as written until an incorporating amendment to the Domestic Mail Manual is published.

In view of the considerations discussed above, the Postal Service hereby adopts, as amended, the Domestic Mail Manual in replacement of chapter 1 of the Postal Service Manual and makes certain changes to section 111, 242.1, 243.2(a)(2)–(5), 247, 248, 257, and 258 of title 39 CFR as provided for elsewhere in this issue.

(39 U.S.C. 401(2), 403)

Fred Eggleston,

Acting Assistant General Counsel.

Chapter 1 of the Postal Service Manual, which is incorporated by reference in the Federal Register (39 CFR Part 111), is hereby replaced by the Domestic Mail Manual (to be incorporated by reference in the Federal Register in Part 111). Except for those provisions of the Domestic Mail Manual not published here because they are not significantly different from their corresponding provisions in the Postal Service Manual and in Title 39, CFR, the Domestic Mail Manual reads as follows:

Domestic Mail Manual

Contents Overview

Chapter 1—Domestic Mail Services

110 General Information
120 Preparation for Mailing
130 Mail Classification
140 Postage
150 Collection and Delivery
160 Philately
170 Special Cancellations

Chapter 2—Express Mail

210 Rates and Fees
220 Classification
230 Service Guarantee
240 Authorizations and Permits
250 Physical Limitations
260 Preparation Requirements
270 Mailing
280 Payment of Postage
290 Ancillary Services

Chapter 3—First-Class Mail

310 Rates and Fees
320 Classification
330 Service Objectives
340 Authorizations and Permits
350 Physical Limitations
360 Preparation Requirements
370 Mailing
380 Payment of Postage
390 Ancillary Services

Chapter 4—Second-Class Mail

410 Rates and Fees
420 Classification
430 Service Objectives
440 Authorizations and Permits
450 Physical Limitations
460 Preparation Requirements
470 Mailing
480 Payment of Postage
490 Ancillary Services

Chapter 5—Controlled Circulation

510 Rates and Fees
520 Classification
530 Service Objectives
540 Authorizations and Permits
550 Physical Limitations
560 Preparation Requirements
570 Mailing
580 Payment of Postage
590 Ancillary Services

Chapter 6—Third-Class Mail

610 Rates and Fees
620 Classification
630 Service Objectives
640 Authorizations and Permits
650 Physical Limitations
660 Preparation Requirements
670 Mailing
680 Payment of Postage
690 Ancillary Services

Chapter 7—Fourth-Class Mail

710 Rates and Fees
720 Classification
730 Service Objectives
740 Authorizations and Permits
750 Physical Limitations
760 Preparation Requirements
770 Mailing
780 Payment of Postage
790 Ancillary Services

Chapter 8—[Reserved]

Chapter 9—Special Services

910 Special Mail Services
920 [Reserved]
930 Supplemental Mail Services
940 Nonmail Services
950 Alternate Delivery Services

CONTENTS

CHAPTER 1—DOMESTIC MAIL SERVICES

110 General Information

111 Scope

111.1 General
111.2 Definition
111.3 Mailer Responsibility
111.4 Applicability of Terms
111.5 Availability and Distribution

112 Who May Carry Letters

112.1 Private Express Statutes
112.2 Implementing Regulations: Questions Answered on Private Express Statutes
112.3 General Coverage of the Private Express Statutes
.31 Definition of Letter
.32 Exclusions
.33 Payment of Postage
.34 Exceptions
.35 Suspension
112.4 Violations
112.5 Advice on the Meaning of Private Express Statutes and Regulations

113 Service in Post Offices

113.1 Establishment of Post Offices
.11 Where Established
.12 Requirements
113.2 Discontinuance of Post Offices
.21 Introduction
.22 Preservation of Community Address
.23 Initial Proposal
.24 Notice, Public Comment, and Record
.25 Consideration of Public Comments and Final Local Recommendation
.26 Final Determination
.27 Implementation of Final Determination
113.3 Emergency Suspension of Service
113.4 Postal Facility Names
.41 Place Names
.42 Post Office Names
.43 Request for Changes
113.5 Military Post Offices
.51 Description
.52 Establishment and Discontinuance
113.6 Hours of Business
.61 Non-Holiday Weekdays
.62 Saturdays
.63 Sundays
.64 Lobby Hours
.65 Local or State Holidays
.66 National Holidays
113.7 Bulletin Boards
.71 General
.72 Prohibited Items
.73 Notices By Members of Congress
.74 Recruiting Posters

114 Complaints

114.1 Consumer Complaints
114.2 Postal Law Violations

115 Mail Security

115.1 Importance of Mail Security
115.2 Opening, Reading, and Searching of Sealed Mail Generally Prohibited
.21 General
.22 Mail Not Sealed Against Inspection
.23 Definitions
.24 Correspondence Permitted to Be Enclosed in Unsealed Mail
115.3 Permissible Detention of Mail
.31 Sealed Mail Generally Not Detained
.32 Unsealed Mail
115.4 Mail Reasonably Suspected of Being Dangerous to Persons or Property
115.5 Disclosure of Information About Mail Sent or Received By Particular Senders or Addressees
115.6 Execution of Search Warrants
.61 Warrant Issued By Federal Court or Served By Federal Officer
.62 Search Warrant Execution Procedures
.63 Notice to Sender or Addressee
115.7 Cooperation With Federal and State and Local Agencies for Access to Mail
115.8 International Transit Mail
.81 Definitions
.82 Special Security Rules
115.9 Mail Security, Law Enforcement, and Other Government Agencies
.91 Customs Service
.92 Department of Agriculture
.93 Military Postal System
.94 Customs Inspection in Guam
.95 Canal Zone Postal Service
.96 Commonwealth of Puerto Rico
.97 Mail Addressed to Prisoners

116 [Reserved]

117 [Reserved]

118 [Reserved]

119 Trademarks, Service Marks, and Copyrights

119.1 Trademarks and Service Marks
119.2 Copyrights
.21 General
.22 National ZIP Code and Post Office Directory
119.3 Inquiries

120 Preparation for Mailing

121 Packaging

121.1 Packaging Adequacy

121.2 Definitions
.21 Types of Loads
.22 Other Definitions
121.3 Packaging for Mailing
.31 Preservation
.32 Acceptable Containers
.33 Cushioning
.34 Closure, Sealing, and Reinforcement
121.4 Marking
.41 General
.42 Special Markings
.43 Marking Surfaces
121:5 Mailability
.51 Acceptability
.52 Stationery
.53 Liquids
.54 Aerosols
.55 High Density Loads
121.6 Mailing Test Packages
121.7 Bulk Mail System Guidelines
.71 General
.72 Books
.73 High Density Items
.74 Softgoods
.75 Sound Recordings
.76 Acceptability of Magnetic Tapes

122 Addresses

122.1 General Information
122.2 Arrangement of Address
122.3 Request for Return and Retention of Mail
122.4 Simplified Address
.41 General Distribution Without Individual Names and Addresses
.42 Occupant
.43 Number of Customers
.44 Mailing Under Congressional Frank
.45 Overseas Military Post Offices
122.5 Mailing List Services
122.6 ZIP Code System
.61 Description
.62 Purpose
.63 Assignment of ZIP Codes
.64 Placement of ZIP Code Digits
.65 Post Office Assistance to Mailers
122.7 Postal Zones
122.8 Military Mail
.81 Overseas Military Mail
.82 Military Mail Within United States
.83 Geographic Address

123 Nonmailable Matter—Written, Printed, and Graphic

123.1 General Provisions
.11 Scope
.12 Rules
.13 Other Nonmailable Matter
123.2 Mailer's Responsibility
123.3 Advice to Mailers—Mailability Decisions
.31 General Advice
.32 Mailability Decision Not Authorized
.33 Authorized Mailability Decisions
.34 Laws and Regulations of Other Agencies
.35 Referral to the Inspection Service
.36 Judicial Determinations
.37 Administrative Appeals
123.4 Nonmailable Written, Printed or Graphic Matter Generally
.41 Solicitations in the Guise of Bills, Invoices or Statements Of Account (39 U.S.C. 3001 (d))
.42 Lottery Matter (18 U.S.C. 1302)
.43 Advertising Matter
.44 Other Prohibited Matter
123.5 Sexually Oriented Advertisements
.51 General
.52 Application for Listing
.53 Revocation of Listing
.54 Availability of Postal Service Lists
.55 Marking of Envelope
.56 Violations
.57 Disposal of Original Form 2201
123.6 Pandering Advertisements
.61 Application for Prohibitory Orders (39 U.S.C. 3008)
.62 Denial of Application
.63 Issuance of Orders
.64 Availability of Remedies
.65 Violations
.66 Abandonment of Application
.67 Void Orders
.68 Modified Orders
.69 Ratified Orders

124 Nonmailable Matter—Articles and Substances: Special Mailing Rules

124.1 General Provisions
.11 Scope
.12 Mailer's Responsibility
.13 Mailability Rulings
.14 Other Laws and Regulations
.15 Markings and Labels
124.2 Harmful Matter (18 U.S.C. 1716)
.21 General
.22 Chemicals
.23 Explosives
.24 Flammable Material
.25 Gases
.26 Powders
.27 Poisons
.28 Disease Germs and Biological Products
.29 Perishable Matter
124.3 Radioactive Material (18 U.S.C. 1716)
124.4 Firearms, Knives, and Sharp Instruments (18 U.S.C. 1715, 1716)
.41 Pistols, Revolvers, and Other Concealable Firearms
.42 Antique Firearms
.43 Rifles and Shotguns
.44 Legal Opinions About Mailing Firearms
.45 Switchblade Knives
.46 Marking Parcels of Firearms and Switchblade Knives
.47 Sharp Objects and Knives
124.5 Controlled Substances, Narcotics (18 U.S.C. 1716)
.51 Definitions
.52 Declaration As to Injurious Nature
.53 Nonmailable Generally
.54 Mailing Requirements
.55 Exempt Shipments
.56 Violations
124.6 Motor Vehicle Master Keys (18 U.S.C. 1716A; 39 U.S.C. 3002)
.61 Definition
.62 Mailability
.63 Marking
.64 Questionable Mailings
124.7 Abortive and Contraceptive Devices or Materials
.71 Abortive Devices and Materials (18 U.S.C. 1461)
.72 Unsolicited Samples of Contraceptive Materials (39 U.S.C. 3001; 18 U.S.C. 1461)
124.8 Nonmailable Articles (18 U.S.C. 1716)
.81 Intoxicating Liquors
.82 Matter Emitting Obnoxious Odor
.83 Liquids
.84 Battery Powered Devices
.85 Odd Shaped Items in Envelopes

125 Mail Addressed From, To, or Between Military Post Offices Overseas

125.1 Preparation and Handling
.11 Postage
.12 Packaging Requirements
.13 Addressing
.14 Weight and Size
.15 Airlift Mail
.16 General Restrictions
125.2 Conditions Prescribed By the Department of Defense

126 Mail Sent Via Department of State to U.S. Foreign Service Personnel Abroad

126.1 Who May Use
126.2 Mailing Conditions
.21 Addressing
.22 Classes
.23 Weight and Size Limits
.24 Postage Rates
.25 Limitations

127 Minimum Sizes

128 Processing Categories

128.1 General
128.2 Letter Size
128.3 Flat Size
128.4 Machinable (Regular) Parcels
.41 Criteria
.42 Exceptions
.43 Exclusions
128.5 Irregular Parcels
128.6 Outside Parcels

129 Envelopes and Cards

129.1 Color
129.2 Quality
129.3 Window Envelopes
129.4 Green Border Envelopes and Cards

130 Mail Classification

131 Classes of Mail

132 Mail Classification Centers

133 Appeal of a Contested Classification

133.1 Classification By Local Post Office
133.2 Classification By USPS Headquarters
133.3 Classification While Appeal is Pending

134 Mail Sent By Members of the U.S. Armed Forces

134.1 Letters Sent Postage Collect
134.2 Letters Sent Free
.21 Eligible Letters
.22 Required Markings
.23 Expedited Transportation and Delivery
.24 Special Services

135 For the Blind and Other Handicapped Persons

135.1 Conditions
135.2 Items Mailable Free
135.3 Markings
135.4 Weight and Size Limits

136 Mixed Classes

136.1 General
136.2 Attachments of Two Different Classes
.21 Attachment
.22 Addressing
.23 Postage
.24 Required Markings
136.3 Mailing Enclosures of Different Classes
.31 With Second-Class and Controlled Circulation Publications
.32 With Third- and Fourth-Class Parcels
136.4 Treatment
.41 Service
.42 Forwarding
.43 Return
136.5 Special Services

137 Official Mail

137.1 Members of Congress
.11 Collection of Postage, Fees, and Charges
.12 Description
.13 Restrictions
.14 Weight and Size Limits
.15 Forwarding Mailing Records for Franked Mail
137.2 Executive and Judicial Officers
.21 Collection of Postage and Fees
.22 Description
.23 Authorized Departments and Agencies
.24 Indicium
.25 Reply and Contractor Use
.26 Weight and Size Limits
.27 Services to Be Provided
.28 ZIP Coding of Mail
137.3 Census and Naturalization Mail
.31 Census Mail
.32 Naturalization Mail
137.4 State Employment Security Mailings
137.5 Absentee Balloting Materials
.51 Purpose
.52 Elections Affected
.53 Required Markings
137.6 President-Elect, Former President, Surviving Spouse of Former President and Surviving Spouse of Member of Congress
.61 President-Elect
.62 Former President and Surviving Spouse of Former President
.63 Surviving Spouse of Member of Congress
137.7 General Secretariat of the Organization of American States and Pan American Sanitary Bureau
137.8 General Instructions
.81 Official Mail Not To Be Detained
.82 Separation of Official Mail By Mailer

140 Postage

141 Stamped Envelopes, Postal Cards, Aerogrammes

141.1 Plain Stamped Envelopes
.11 Envelopes Available at Post Offices
.12 Sales at Post Offices
.13 Precanceled Envelopes
.14 Window Envelopes
.15 Envelope Dimensions
.16 Private Printing of Return Addresses
141.2 Printed Stamped Envelopes (Special-Request)
.21 Printed Stamped Envelopes Available
.22 How to Order Printed Stamped Envelopes
.23 Style of Printing Return Addresses
.24 Required Printing
.25 Optional Printing
.26 Other Requirements
.27 Prohibited Printing
.28 Rejection of Envelopes
141.3 Postal Cards Available
141.4 Aerogrammes

142 Adhesive Stamps

142.1 Availability and Use
.11 Types
.12 Use
.13 Perforating
.14 Reuse Prohibited
142.2 Purchase
.21 Acceptable Form of Payment
.22 Purchase Receipts
.23 Postage Due
142.3 Validity of Stamps
142.4 Unlawful Use of Stamps
.41 By Postal Employees
.42 Counterfeit Stamps
142.5 Reproduction of Stamps
142.6 Imitations of Stamps and Official Markings
.61 Postage Stamps
.62 Official Markings and Designs
.63 Permissible Seals and Stickers

143 Precanceled Stamps

143.1 General
.11 Definition
.12 Methods of Precanceling
.13 Place of Mailing
.14 Prohibition
143.2 Philatelic Sales
.21 Non-Permit Holders
.22 Permit Holders
143.3 Mailer's Precancel Postmark
.31 Application
.32 Approval
.33 Format
.34 Revocation of Mailer's Permit
143.4 Stamps Precanceled By Postal Service
.41 Mailing Permit Required
.42 Required Format
.43 Revocation of Mailer's Permit
.44 Small Quantities Precanceled By Handstamp

144 Postage Meters and Meter Stamps

144.1 Postage Meters
.11 Use of Meter Stamps
.12 Description of Meters
.13 Meter Manufacturers
144.2 Meter License
.21 Application
.22 Responsibilities of Licensee
.23 Revocation
144.3 Setting Meters
.31 Requirement
.32 Place
.33 Payment
.34 Setting Meter for Use at Another Post Office
.35 On-Site Meter Setting Program
.36 Checking Meter Out-Of-Service
.37 Refunds for Unused Meter Stamps
.38 Computerized Remote Postage Meter Resetting
144.4 Meter Stamps
.41 Designs
.42 Legibility
.43 Fluorescent Ink
.44 Meter Stamps on Tape
.45 Position
.46 Content
.47 Date of Mailing
.48 Hour of Mailing
.49 Ad Plates
144.5 Mailings
.51 Preparation
.52 Place of Mailing
.53 Mailing Irregularities
144.6 Lost or Stolen Meters
144.7 [Reserved]
144.8 [Reserved]

144.9 Manufacture and Distribution of Postage Meters
.91 Authorization to Manufacture and Lease
.92 Specifications
.93 Testing and Approval
.94 Safeguards
.95 Distribution
.96 Maintenance
.97 Computerized Remote Postage Meter Resetting
.98 Notice of Proposed Changes in Regulations

145 Permit Imprints (Mail Without Affixed Postage)

145.1 Definition
145.2 Permit
.21 Application
.22 Revocation
145.3 Preparation of Permit Imprints
145.4 Content of Permit Imprints
.41 First-Class Mail
.42 Second-, Third-, and Fourth-Class Mail
.43 Mail With Special Services
.44 Company Permit Imprints for Any Class of Mail
145.5 Format of Permit Imprints
145.6 Mailings With Permit Imprints
.61 Minimum Quantities
.62 Exceptions to Minimum Quantities
.63 Preparation for Mailing
.64 Place of Mailing
.65 Mailing Statement
.66 Prepayment of Postage Required
145.7 Use of Permit Imprints
.71 General
.72 Place of Acceptance
145.8 Optional Acceptance Procedure
.81 Objective
.82 Qualifications Requirements
.83 Applications
.84 Approval or Denial
.85 Renewal of Authorizations
.86 Revocation
.87 Mailing Acceptance
.88 Mailing Records
145.9 Alternate Methods of Paying Postage
.91 Application Procedure
.92 Conditions of Authorization

146 Prepayment and Postage Due

146.1 Postage Payment
.11 Prepayment Required
.12 Unpaid Matter Found in the Mail
.13 Insufficient Prepayment
.14 Postage on Mail Insufficiently Prepaid
.15 Parcels Containing Written Matter
146.2 Mailable Matter Not Bearing Postage Found In or On Private Mail Receptacles
.21 Penalty
.22 Collection of Postage
.23 Report to Other Office
.24 Repeated Violations
146.3 Collection of Postage Due
.31 Collected on Delivery
.32 Use of Postage Due Stamps
.33 Use of Postage Stamps, Permit Imprints, or Customer Meter Strips
.34 Advance Deposit
146.4 When Not Collected
.41 Stamps Lost Off Mail
.42 Addressed to Postmaster
.43 Addressed to Regional Office, Postal Inspector in Charge, and Postal Inspectors
.44 Addressed to Other Federal Government Offices
.45 Registered Mail

147 Exchanges and Refunds

147.1 Exchanges of Stamps
.11 Post Office Mistake
.12 Purchaser's Mistake
.13 Unserviceable Postal Stationary and Unused Precanceled Stamps
.14 Nonexchangeable
147.2 Refunds
.21 Justification
.22 Amount Allowable
.23 Unallowable Refunds
.24 Application for Postage Refund
.25 Meters and Meter Stamps
.26 Refund Application for Retail Services

148 Revenue Deficiency

148.1 General
148.2 Appeal of Ruling

149 Indemnity Claims

149.1 Insured Mail and COD Claims
.11 Who May File
.12 How to File
.13 When to File
.14 Information Required
.15 Payable and Nonpayable Claims
.16 Used Articles—Lost or Damaged
.17 Disposition of Damaged Articles
.18 Duplicate Claims
149.2 Registered Mail Claims
.21 Who May File
.22 How to File
.23 When to File
.24 Information Required
.25 Assignment of Responsibilities
.26 Payment Conditions
.27 Disposition of Article
.28 Followup on the Status of a Claim
.29 Duplicate Claims

150 Collection and Delivery

151 Private Mail Receptacles

151.1 Designation As Authorized Depository
151.2 Use for Mail Only
151.3 Maintaining a Clear Approach to Mailbox

152 Mail Deposit and Collection

152.1 Collection Times
152.2 Ordinary Deposit of Mail
.21 Post Office Lobby
.22 Collection Boxes
.23 Rural Boxes
.24 VIM Mailrooms
152.3 Deposit of Mail With Employees
152.4 Mail Chutes and Receiving Boxes
.41 Use
.42 Installation, Specification, and Maintenance
152.5 Bulk Mailings
152.6 Separation of Mail By Sender
152.7 Recall of Mail
.71 Who May Recall Mail
.72 Expenses
.73 Original Postage
.74 Carriers
.75 Registered Mail
.76 Telegram
.77 Return
152.8 Disposal of Mail on Request By Mailer
.81 Requests
.82 Additional Expenses
.83 Postage
.84 Disposal Action

153 Conditions of Delivery

153.1 Delivery, Refusal and Return
.11 Conditions
.12 Delivery to Persons Having Similar Names
.13 Mail Delivered to Wrong Person
.14 Checks Issued By the Federal Government
.15 Checks Issued By State and Local Governments
.16 Mail Marked *In Care Of* Another
.17 Restricted Delivery
.18 Mail Marked *Personal*
.19 Holding Mail at Request of Addressee
153.2 Delivery of Addressee's Mail to Another
.21 Delivery to Addressee's Agent
.22 Mail Addressed to Minors
.23 Mail Addressed to Incompetents
.24 Mail Addressed to Deceased Persons
153.3 Jointly Addressed Mail
.31 Delivery of Jointly Addressed Mail
.32 Delivery of Mail Addressed to Husbands or Wives
153.4 Delivery to Officials or Employees of Organizations
153.5 Delivery to Officials or Employees of Corporations and Unincorporated Firms
.51 Mail Addressed to Corporations
.52 Mail Addressed to Unincorporated Firms or Partnerships
153.6 Delivery to Persons at Hotels, Institutions, Schools, Etc.
.61 Mail Addressed to Patients or Inmates
.62 Mail Addressed to Persons at Hotels, Schools, Etc.

.63 Registered Mail Addressed to Persons at Hotels and Apartment Houses
153.7 Conflicting Orders By Two or More Parties for Delivery of Same Mail
.71 Delivery to Receiver
.72 Reference to Regional Counsel for Ruling
.73 Delivery of Mail in Accordance With Court Order
153.8 Delivery of Packages
.81 Heavy or Bulky Packages
.82 Unprotected Places
.83 Multiple-Floor Buildings
.84 Second-Attempt Delivery
.85 Street-Address Delivery for Box Renters
153.9 Delivery to Military Organizations and Naval Vessels
.91 Units Not Operating Military Post Offices
.92 Units Operating Military Post Offices
.93 Identification
.94 Return Receipts

154 General Delivery

155 City Delivery

155.1 Requirements for Delivery Service
.11 Establishment
.12 Extensions
.13 Existing Establishments and Extensions Not Affected
155.2 Delivery Policy—Establishment and Extensions
.21 General
.22 Business Areas
.23 Residential Housing (Except Apartment Houses and Mobile or Trailer Homes)
.24 Apartment Houses
.25 Mobile or Trailer Homes
.26 Exceptions
.27 Local Ordinances
155.3 Requests for Delivery Service
155.4 Mail Receptacles
.41 Obligation of Customer
.42 Keys to Customer Private Mail Receptacle
.43 Door Slot Specifications
155.5 Out-of-Bounds Customers
155.6 Apartment House Receptacles
.61 General
.62 Exceptions
.63 Mail Receptacles
.64 Installation, Specifications, and Approval

156 Rural Service

156.1 Rural Stations and Branches
.11 Establishment
.12 Functions
.13 Hours
.14 Treatment of Mail
156.2 Delivery Routes
.21 Establishment
.22 Extensions
.23 Road Conditions
.24 Obstructions to Travel
.25 Multiple Routes
.26 Highway Contract Delivery
156.3 Carrier Service
.31 Availability
.32 To Residence
.33 Parcel Delivery
.34 Contagious Disease
.35 Withdrawal of Service
156.4 Payment of Postage
.41 Acceptance of Mail
.42 Postage Uncertain
.43 Insufficient Postage
.44 Mailable Matter Not Bearing Postage Found In or On Rural Mailboxes
156.5 Rural Boxes
.51 Specifications
.52 Painting and Identification
.53 Posts and Supports
.54 Location
.55 Grouping
.56 More Than One Family
.57 Locks
.58 Unstamped Newspapers
.59 Noncomforming Rural Boxes

157 Highway Contract Service

157.1 Description
157.2 Establishment
.21 New Service
.22 Changes
157.3 Box Delivery and Collection
.31 Service Required
.32 Availability
.33 Delivery of Mail
.34 Collection of Mail
157.4 Location of Boxes and Receptacles
157.5 Duties of Postmasters
157.6 Duties of Carriers
157.7 Sale of Stamps and Stamp Supplies

158 [Reserved]

159 Undeliverable Mail

159.1 Mail Undeliverable-As-Addressed
.11 General Provisions
.12 Specific Provisions
.13 Undeliverable Due to Postal Service Adjustments
.14 Endorsements
.15 Treatment of Undeliverable-As-Addressed Mail
159.2 Forwarding
.21 Change of Address Order
.22 Forwardable Mail
.23 Obvious Value Mail
.24 Postage for Forwarding
.25 Directory Service
159.3 Address Correction Service and Return
.31 Address Correction Service
.32 Registered and COD Mail
.33 Return
159.4 Disposition of Articles Found Loose in the Mail
.41 Identified Articles
.42 Unidentified Articles
.43 Merchandise Bearing a Controlled Name
.44 Return of Merchandise
159.5 Dead Mail
.51 Definition
.52 Treatment at Local Postal Facility
.53 Matter Sent to Dead Letter and Dead Parcel Branches
.54 Dead Letter Branches and Service Areas
.55 Dead Parcel Branches

160 Philately

161 Policy

162 Purpose and Selection of Commemorative Stamps and Postal Stationery and Philatelic Products

162.1 Purpose
162.2 Selection
162.3 Philatelic Products

163 Distribution and Sale of Stamps, Postal Stationery, and Philatelic Products

163.1 Distribution
163.2 Requisitioning
163.3 Retail Sales
.31 General
.32 Philatelic Centers
.33 Dedicated Philatelic Windows
.34 Temporary Philatelic Stations
163.4 Mail Order Sales
163.5 Sales Policies
.51 New Issues
.52 Regular Stamp Windows and Stamp Collecting Centers
.53 Philatelic Outlets
163.6 Stamp Withdrawals

164 Cancellations for Philatelic Purposes

164.1 Definition and Policy
164.2 Philatelic Postmarking
.21 General
.22 Cooperation With Collectors
.23 Hand Back and Mail Back Service
164.3 Permissible Cancellation Devices
.31 Handstamped Cancellations for Collectors
.32 Obliterators
164.4 Types of Postmarks or Cancellations
.41 First Day of Issue
.42 Pictorial Cancellations
.43 Special Die Hub Cancellations
.44 Standard Cancellations
.45 Flight Cancellations
.46 Regular Machine Cancellations
164.5 First Day of Issue
.51 First Day Sale
.52 Notification
.53 First Day Covers
.54 Unofficial First Day Covers

164.6 Flight Covers
.61 Definition
.62 Authorization
.63 Preparation of Covers
.64 Submittal of Covers
.65 Compliance With Collector's Requests
.66 When Cachets Must Not Be Applied
.67 Backstamping
.68 Delay of Flight
164.7 When and Where Philatelic Postmarking May Be Done
.71 Date and Place of Postmarking
.72 Preparation Requirements
.73 Special Materials on Which Cancellations Are Requested
.74 Holding the Mail
.75 Damaged or Missing Covers
.76 Special Requests
.77 Military Post Offices
164.8 Cover Servicers and Dealers
.81 Definition
.82 Mail Back Service
.83 Conditions of Service
164.9 Cancellation Services at Temporary Philatelic Stations
.91 Approval
.92 Requirements
.93 Publicity
.94 Equipment
.95 Service Limitations
.96 Use and Return of Equipment

165 Special Philatelic Services, Products, and Programs

165.1 Postal Cacheted Envelopes
165.2 Presentations
165.3 Autographs

166 Copyright of Philatelic Designs

166.1 Policy
166.2 Permission for Use
166.3 Reproduction of Designs
166.4 Requests for Licenses

170 Special Cancellations

171 Authorization

172 Revocation

173 Requirements for Obtaining Special Stamp Cancellation Die Hubs

173.1 Application
173.2 Referral By Postmaster
173.3 Approval or Denial
173.4 Cost

174 Disposition

174.1 After Use
174.2 Unserviceable Die Hubs

175 Mail Submitted for Special Cancellations

175.1 Postage
175.2 Holding the Mail

CHAPTER 2—EXPRESS MAIL

210 Rates and Fees

211 General Information

212 Express Mail Same Day Airport Service Rates

213 Express Mail Custom Designed Service Rates

214 Express Mail Next Day Service Rates

220 Classification

221 Description

221.1 Availability of Service
221.2 Service Offerings

222 Express Mail Same Day Airport Service

222.1 Availability of Service
222.2 Refund of Postage

223 Express Mail Custom Designed Service

223.1 Availability of Service
.11 Scheduled Basis
.12 Designated Facilities and Locations
223.2 Service Agreement
.21 Provisions in All Custom Designed Agreements
.22 Commencement of Service Agreements
.23 Termination of Service Agreements
223.3 Service Guarantee

224 Express Mail Next Day Service

224.1 Availability of Service
224.2 Types of Service Available
.21 Post Office to Post Office Service
.22 Post Office to Addressee Service
224.3 Service Agreement
224.4 Service Guarantee

230 Service Guarantee

240 Authorizations and Permits

241 Service Agreements

242 Special Permit and Postage Trust Accounts

250 Physical Limitations

251 Weight

252 Size

260 Preparation Requirements

261 Express Mail Same Day Airport Service

262 Express Mail Custom Designed Service

263 Express Mail Next Day Service

270 Mailing

280 Payment of Postage

290 Ancillary Services

291 Forwarding

292 Return

293 Evidence of Mailing

294 Insurance and Indemnity

294.1 General
294.2 Document Reconstruction Insurance
294.3 Merchandise Insurance
294.4 Indemnity Payment, Exceptions

295 Claims Procedures

CHAPTER 3—FIRST-CLASS MAIL

310 Rates and Fees

320 Classification

321 General Description

321.1 Matter Mailable at First-Class Rates
321.2 Examples
321.3 Air Transportation Prohibitions

322 Postal and Post Cards

322.1 Postal Cards
322.2 Post Cards
322.3 Restrictions on the Use of Double and Single Postal and Post Cards
.31 General Restrictions
.32 Cards Mailable Under 322.31 h, i, or j
322.4 Cards Other Than Postal and Post Cards

323 Presorted First-Class Mail

324 First-Class Zone Rated (Priority) Mail

324.1 Description
324.2 Acceptable Articles, Exceptions
.21 Air Transportation Limitations
.22 Exceptions
324.3 Additions and Enclosures

330 Service Objectives

331 General

332 Specific

340 Authorizations and Permits

341 Annual Presort Fee

342 Other Permits Required

350 Physical Limitations

351 Weight Limits

352 Size Limits

352.1 Length and Girth
.11 Maximum Dimensions
.12 Measurement
.13 Two or More Packages
352.2 Shape, Ratio, and Sealing

.21 Standards
.22 Recommendations
353 Nonstandard First-Class Mail
353.1 Size Limits
353.2 Delays
353.3 Surcharge
360 Preparation Requirements
361 General Requirements
362 Preparation of Presort Rate Mail
362.1 Addresses
362.2 Markings Required
362.3 Mailing Statement
362.4 Sorting Requirements
.41 Packages
.42 Rubber Bands
.43 Labeling of Packages
.44 Traying and Pouching
.45 Sortation
362.5 Presort Verification
.51 Where Verified
.52 When a Presort Mailing Is Disqualified
363 First-Class Zone Rated (Priority) Mail; Marking and Sealing
363.1 Marking
363.2 Sealing
370 Mailing
371 Regular Single Piece and Card Rates
372 Presort Rates
373 First-Class Zone Rated (Priority) Mail
380 Payment of Postage
381 Single Piece Rates
381.1 Method of Payment
381.2 Payment According to Weight
381.3 Aggregation of Letters
.31 More Than One Mailer
.32 More Than One Letter
382 Presort Rates
382.1 Method of Payment
382.2 Exact Postage on Each Piece
382.3 Presort Rate on Residual Pieces
.31 Identical Pieces
.32 Nonidentical Pieces
.33 Payment of Additional Postage
383 First-Class Zone Rated (Priority) Rates
390 Ancillary Services
391 Forwarding
391.1 Pieces Weighing 12 Ounces or Less
391.2 Pieces Weighing Over 12 Ounces
392 Return and Address Correction
392.1 All Except Card Rate
.11 Return
.12 Address Correction
392.2 Postal and Post Cards

CHAPTER 4—SECOND-CLASS MALL

410 Rates and Fees
411 Rates
.411.1 General
.11 Rate Elements
.12 Form 3541
411.2 In-County Rates
.21 General Application
.22 Independent Cities
411.3 Out-Of-County Rates
.31 General
.32 General Publications and Science Of Agriculture Publications
.33 Special Nonprofit Rate
.34 Classroom Publications
411.4 Rate for Nonsubscriber Copies
.41 Commingled and Presorted With Subscribers' Copies
.42 Transient Rate for Noncommingled Copies
412 Fees
412.1 Fees for Second-Class Privileges
412.2 Fee for Address Correction Service
420 Classification
421 Requirements for all Second-Class Publications
421.1 Periodical Publications
421.2 Regular Issuance
421.3 Issuance From a Known Office of Publication
421.4 Printed Sheets
422 Types of Authorizations
422.1 Qualification Categories
422.2 General Publications
.21 Contents
.22 Circulation Requirements
.23 Advertisting Restrictions
422.3 Publications of Institutions and Societies
.31 Types of Publications Eligible
.32 Provisions for General Advertising
422.4 Publications Issued By State Departments of Agriculture
422.5 Foreign Publications
423 Special Second-Class Privileges
423.1 Special Nonprofit Rate
.11 Authorization
.12 Publications of Qualified Nonprofit Organizations
.13 Definitions of Eligible Nonprofit Organizations
.14 Publications of Other Qualified Organizations
423.2 Classroom Rate
423.3 Science of Agriculture Rate
424 Second-Class Mailing Privileges for News Agents
424.1 Definition
424.2 Information Required
424.3 Remailing Without Payment of Postage Prohibited
424.4 Copies Subject to the Nonsubscriber Rates
424.5 Return of Portions of Unsold Publications
425 What May Be Mailed at the Second-Class Rates
425.1 Complete Copies
425.2 Editions and Special Issues
425.3 Back Numbers and Reprints
425.4 Supplements
425.5 Parts and Sections
.51 Regular Pages
.52 Title
.53 Number
.54 Restrictions
425.6 Enclosures
425.7 Additions
425.8 Novelty Pages
.81 Definition
.82 Examples
425.9 Advertisements
.91 Integral Part of the Publication
.92 Physical Makeup
426 Copies Not Paid for By the Addressee
426.1 Sample Copies
.11 Mailing Conditions
.12 Copies Mailed for Advertising Purposes
.13 Addressing and Mailing
426.2 Copies Paid for By Advertisers
426.3 Copies Paid for As Gifts
426.4 Exchange Copies
426.5 Expired Subscriptions
426.6 Complimentary Copies
426.7 Advertisers' Proof Copies
426.8 Copies Mailed By Printer
430 Service Objectives
431 General
432 Newspaper Treatment
440 Authorizations and Permits
441 Original Entry for Publishers and News Agents
441.1 Application Forms and Copies Filed
.11 General
.12 General Publications
.13 Publications of Institutions and Societies
.14 Publications Issued By State Departments Of Agriculture
.15 Foreign Publications
.16 News Agents
441.2 Granting or Denying Applications
.21 Responsibility
.22 Granting an Application
.23 Denying an Application
441.3 Acceptance After the Application Is Filed
.31 General
.32 Record of Postage Paid
.33 Refund
441.4 Effective Date

441.5 Revocation or Suspension of Second-Class Privileges
.51 General
.52 Initial Determination and Appeal
.53 Procedures

442 Additional Entry Applications

442.1 Application Procedure
442.2 Restrictions
.21 Same County
.22 Transportation Restrictions
442.3 Granting or Denying Applications
.31 Responsibility
.32 Granting an Application
.33 Denying an Application

443 Applications to Mail at Special Second-Class Rates

443.1 General Application Procedures
443.2 Specific Application Procedures
.21 Special Nonprofit Rate
.22 Classroom Rate
.23 Science of Agriculture Rate
443.3 Granting or Denying Applications
.31 Responsibility
.32 Granting an Application
.33 Denying an Application
443.4 Mailing While Application Is Pending
.41 Application for a Publication Already Authorized Second-Class Entry
.42 Applications for Original Entry and Special Rate Entry Filed Simultaneously
.43 Effective Date
443.5 Appeals

444 Application for Reentry

444.1 Form 3510
444.2 Changing Qualification Categories
.21 General to Institutions and Societies
.22 Institutions and Societies to General
444.3 General Advertising
444.4 Acceptance After the Application Is Filed
444.5 Granting or Denying Applications
.51 Responsibility
.52 Granting an Application
.53 Denying an Application

445 Application for Exceptional Dispatch

445.1 General
445.2 Application
445.3 Approval or Denial
445.4 Verification

446 Revocation of Additional Entry, Special Second-Class Privileges, Reentry, and Exceptional Dispatch

447 Maintenance and Verification of Publisher Records

447.1 Eligibility Records
447.2 Information Requirements
447.3 Types of Records
447.4 Verification Requirements
447.5 Verification Procedures

448 Statement of Ownership, Management, and Circulation

448.1 Filing Requirements
448.2 Information Required
448.3 Publication Requirements
.31 General Publications
.32 Other Publications
448.4 Other Forms Required
448.5 Failure to Submit Required Information or Forms

449 Fees

450 Physical Limitations

460 Preparation Requirements

461 Identification Statements in Copies

461.1 Information Required
461.2 Sample Format

462 Preparation

462.1 Folding
462.2 Wrapping
462.3 Addressing

463 Marking

463.1 Marking of Paid Reading Matter
.11 General
.12 More Than One Page
.13 Included in a Statement
463.2 Notice of Entry
463.3 Return Postage Guaranteed
463.4 Requests for Change of Address
463.5 Publications Authorized Newspaper Treatment

464 Presort Requirements

464.1 Packaging Requirements
.11 Firm Packages
.12 5-Digit Packages
.13 Loose Packing
.14 Mixed City Packages
.15 SCF Packages
.16 State Packages
.17 Mixed State Packages
.18 Facing
.19 Package Labels
464.2 Sacking Requirements
.21 General
.22 5-Digit Sacks
.23 Mixed City Sacks
.24 SCF Sacks
.25 State Sacks
.26 Mixed State Sacks
464.3 Bundling Instead of Sacking
.31 Regional Authorization
.32 Bundling Requirements
464.4 Palletizing Instead of Sacking
.41 Regional Authorization
.42 Palletizing Requirements
464.5 Copies for Military Post Offices Overseas
.51 Direct Packages
.52 Mixed Packages
.53 Direct Sacks
.54 Mixed Sacks
464.6 Preparing Out-Of-County Rated Pieces (Levels B, C, and E)

470 Mailing

471 Who May Mail

472 Place of Mailing

480 Payment of Postage

481 Payments in Advance of Dispatch

482 Mailing Statement

482.1 Computing Postage
482.2 General Rule
.21 When to File
.22 Percentage of Advertising
.23 Determining Average Weight Per Copy
.24 Copies of Previous and Current Issues Combined
.25 Mailing While Application Is Pending
482.3 Monthly Mailing Statement
.31 Authorization to Use
.32 When to File
.33 Completion of Mailing Statement By Mailer
.34 Computation of Postage By Post Office
482.4 Key Rate
.41 Definition
.42 Authority to Use
.43 Statements of Distribution
.44 Computation
.45 News Agent's Mailing Statement

483 Marked Copy

483.1 Requirement to File
483.2 Payment of Advertising on Reading Portions

490 Ancillary Services

491 Forwarding

491.1 Local Change of Address
491.2 Non-Local Change of Address
.21 Guarantee to Pay Forwarding Postage
.22 Failure to Guarantee

492 Address Correction Service

492.1 Notifying Publishers
492.2 Sending Notification

493 Return

CHAPTER 5—CONTROLLED CIRCULATION MAIL

510 Rates and Fees

511 Rates

511.1 Rate Elements
511.2 Current Rates
511.3 Form 3541-A

512 Fees

512.1 Address Correction Service Fee
512.2 Application Fee

520 Classification
521 Description and Qualifications
522 Definition of Advertising
522.1 General
522.2 Specific
523 What May Be Mailed
530 Service Objectives
540 Authorizations and Permits
541 Controlled Circulation Applications
541.1 General
541.2 Application Procedures
541.3 Approving or Denying Applications
541.4 Mailing While Application Is Pending
.41 General
.42 Record of Postage Paid
.43 Refund
541.5 Effective Date
541.6 Appeal of a Denied Application
542 Change in Title or Frequency
543 Revocation of Controlled Circulation Privileges
543.1 Notice By Postmaster
543.2 Determination
550 Physical Limitations
560 Preparation Requirements
561 Identification Statements in Copies
561.1 Information Required
561.2 Sample Format
561.3 Known Office of Publication
561.4 Wrapped Publications
561.5 Mailed From More Than One Office
562 Preparation
562.1 Folding
562.2 Wrapping
562.3 Addressing
563 Marking
563.1 Notice of Entry
563.2 Return Postage Guaranteed
563.3 Requests for Change of Address
564 Presort Requirements
564.1 Packaging Requirements
.11 Firm Packages
.12 5-Digit Packages
.13 Loose Packing
.14 Mixed City Packages
.15 SCF Packages
.16 State Packages
.17 Mixed State Packages
.18 Facing
.19 Package Labels
564.2 Sacking Requirements
.21 General
.22 5-Digit Sacks
.23 Mixed City Sacks
.24 SCF Sacks
.25 State Sacks
.26 Mixed State Sacks
564.3 Bundling Instead of Sacking
.31 Regional Authorization
.32 Bundling Requirements
564.4 Palletizing Instead of Sacking
.41 Regional Authorization
.42 Palletizing Requirements
564.5 Copies for Military Post Offices Overseas
.51 Direct Packages
.52 Mixed Packages
.53 Direct Sacks
.54 Mixed Sacks
570 Mailing
580 Payment of Postage
581 Payment in Advance of Dispatch
582 Mailing Statement
582.1 Submitting for 3541-A
582.2 Mailing While Application Is Pending
582.3 Computing Average Weight
583 Marked Copy
584 Statistical Statement
585 Mailer's Records
590 Ancillary Services
591 Forwarding
591.1 Local Change of Address
591.2 Non-Local Change of Address
.21 Guarantee to Pay Forwarding Postage
.22 Failure to Guarantee
592 Address Correction Service
592.1 Notifying Publishers
592.2 Sending Notification
593 Return
CHAPTER 6—THIRD-CLASS MAIL
610 Rates and Fees
611 Rates
611.1 Single Piece Rates
.11 General
.12 Exception
611.2 Bulk Rates
611.3 Minimum Bulk Rate Postage
611.4 Keys and Identification Devices
611.5 Exception
612 Fees
612.1 Annual Bulk Mailing Fee
612.2 Address Correction Service Fee
620 Classification
621 Description
621.1 General
621.2 Circulars
621.3 Printed Matter
621.4 Sealing and Securing
622 Third-Class Bulk Mail
622.1 Eligibility
622.2 Postage
622.3 Merging and Presorting
622.4 Services Not Available
622.5 [Reserved]
623 Special Bulk Rates
623.1 Authorization
623.2 Qualified Nonprofit Organizations
.21 General
.22 Primary Purpose
.23 Definitions of Eligible Nonprofit Organizations
623.3 Qualified Political Committees
.31 General
.32 Definitions of Qualified Political Committees
623.4 Ineligible Organizations
623.5 What May Be Mailed
623.6 Identification
624 Keys and Identification Items
625 Additions
626 Enclosures
626.1 With Books and Catalogs Mailed at Bulk Rates
.11 General
.12 Invoices
626.2 With All Other Third-Class Matter
627 Attachments
627.1 To Books and Catalogs Mailed at Bulk Rates
627.2 To All Other Third-Class Matter
628 Other Additions, Enclosures, and Attachments
630 Service Objectives
640 Authorizations and Permits
641 Annual Fee-Bulk Rates
642 Application to Mail at the Special Bulk Rates
642.1 Application Procedures
.11 Filing
.12 Evidence of Qualification
642.2 Granting or Denying Applications
642.3 Appeal Procedures
642.4 Mailing While Application Pending
.41 General
.42 Record of Postage Paid
.43 Refund
.44 Effective Date
.45 Appeals
643 Revocation
643.1 Notice of Revocation
643.2 Initiating a Review
643.3 Revocation for Nonuse
650 Physical Limitations
651 Weight and Size Limits
651.1 Weight
651.2 Size, Shape, and Ratio
.21 Standard

.22 Recommendations
652 Nonstandard Third-Class Mail
652.1 Size Limits
652.2 Delays
652.3 Surcharge

660 Preparation Requirements

661 Addressing

661.1 General
661.2 ZIP Code
662 Marking
662.1 Single Piece Rate
662.2 Bulk Rates
663 Preparation of Bulk Rate Mailings
663.1 Standard Preparation Requirements
.11 Packaging Requirements
.12 Sacking Requirements
663.2 Optional Preparation Requirements for Machinable Parcels
.21 General
.22 Sacking Requirements
663.3 Bundling Instead of Sacking
.31 Regional Authorization
.32 Bundling Requirements
663.4 Palletizing Instead of Sacking
.41 Regional Authorization
.42 Palletizing Requirements
663.5 Irregular Parcels (SPR's)
.51 Exemptions From Packaging Requirements
.52 Authorizing Commingling
.53 Waiving Bundling Requirements
.54 Labeling Sacks

664 Merchandise Samples

664.1 General
664.2 Address Cards
664.3 Samples
664.4 Postage
664.5 Mailing Periods
665 Catalogs and Books

670 Mailing

671 Single Piece Rates

672 Bulk Rates

672.1 Regular Bulk Rates
672.2 Special Bulk Rates

680 Payment of Postage

681 Method of Payment

681.1 Single Piece Mailings
681.2 Bulk Mailings
.21 Identical Weight Pieces
.22 Nonidentical Weight Pieces
.23 Single Piece Weight
682 Mailing Statement for Bulk Mailings

690 Ancillary Service

691 Forwarding and Return

692 Return

693 Address Correction

694 No Service Requested

CHAPTER 7—FOURTH-CLASS MAIL

710 Rates and Fees

711 Rates

711.1 Parcel Post Rates
711.2 Bound Printed Matter Rates
711.3 Special Fourth-Class Rates
711.4 Library Rate

712 Fees

712.1 Annual Fourth-Class Presort Mailing Fee
712.2 Address Correction Fee

720 Classification

721 General Provisions Applicable to All Fourth-Class Mail

721.1 Description
721.2 Additions and Enclosures
722 What May Be Mailed at Parcel Post Rates
722.1 Description
722.2 Bulk Parcel Post
.21 Requirements
.22 Special Services
.23 Enclosures

723 What May Be mailed at Bound Printed Matter Rates

723.1 Description
723.2 Bulk Bound Printed Matter
.21 Requirements
.22 Special Services
.23 Enclosures

724 What May Be Mailed at Special Fourth-Class Rates

724.1 General Description
724.2 Special Fourth-Class Presort Rates
.21 Applicability
.22 Qualification for Presort Rates
.23 Nonqualifying Pieces
.24 Nonidentical Pieces
724.3 Enclosures
.31 General
.32 Books
.33 Sound Recordings
.34 Other Material

725 What May Be Mailed at the Library Rate

725.1 Description
725.2 Items on Loan or Exchange
725.3 Items Not Required To Be on Loan or Exchange
725.4 Books Mailed by a Publisher or Distributor
725.5 Enclosures
.51 General
.52 Books
.53 Sound Recordings
.54 Other Material

730 Service Objectives

740 Authorizations and Permits

741 Nonidentical Pieces Mailed at the Bulk Parcel Post Zone Rate

742 Special Fourth-Class Presort Mailing Fee

750 Physical Limitations

751 Weight and Size Limits

752 How To Compute the Size of a Parcel

752.1 Measurement
752.2 Two or More Packages

760 Preparation Requirements

761 General Requirements

761.1 Addressing
761.2 Sealing

762 Preparation of Bulk Parcel Post

762.1 Marking
762.2 Separation

763 Preparation of Bound Printed Matter

763.1 Markings Required
763.2 Recommended Separations
763.3 Required Separation for Bulk Mailings
763.4 Optional Handling of Bulk Mailings Weighing Over 2 Pounds
763.5 Bundling Instead of Sacking
.51 Regional Authorization
.52 Bundling Requirements
763.6 Palletizing Instead of Sacking
.61 Regional Authorization
.62 Palletizing Requirements

764 Preparation of Special Fourth-Class Presort Rate Mail

764.1 Markings Required
764.2 Sack Labeling Requirements
.21 General
.22 Level A Presort Rate Mailings
.23 Level B Presort Rate Mailings Mailed Under 724.222b
.24 All Other Level B Presort Rate Mailings
764.3 Container or Pallet Labeling
.31 General
.32 Level A Presort Rate Mailings
.33 Level B Presort Rate Mailings Mailed Under 724.222b
.34 All Other Level B Presort Rate Mailings

765 Preparation of Library Rate Materials
770 Mailing
771 Single Piece Rates
772 Bulk or Presort Rates
773 Parcels Exceeding Size or Weight Limits
780 Payment of Postage
781 Single Piece Mailings
782 Bulk Rate Mailings
790 Ancillary Services
791 Forwarding and Return
792 Return
792.1 Pieces Bearing Return Instructions
792.2 Pieces Bearing a Meter Stamp
792.3 Rates and Conditions
793 Address Correction
794 No Service Requested
CHAPTER 8—[RESERVED]
CHAPTER 9—SPECIAL SERVICES
910 Special Mail Services
911 Registered Mail
911.1 Description
.11 Purpose
.12 What May Be Registered
.13 Where to Mail
.14 Registration Not Available
.15 Additional Services
911.2 Fees and Liability
.21 Fees
.22 Payment of Fees and Postage
.23 Postal Insurance Liability
.24 Refunds
.25 Declaration by Sender
.26 Mail Registered Without Prepayment
911.3 Preparation for Mailing
.31 Conditions
.32 Sealing
.33 Fragile Items
.34 Packing
.35 Window Envelopes
.36 Firm Registration Books
.37 Return Receipts and Restricted Delivery
.38 Mailing Receipts
.39 Withdrawal or Recall
911.4 Delivery
.41 Procedure
.42 Notice of Arrival
.43 Restricted Delivery
.44 When Not Delivered
.45 Highway Contract Route Delivery
.46 Bad Condition
912 Certified Mail
912.1 Description
912.2 What May Be Certified
912.3 Fees
912.4 Mailing
.41 Payment of Fees and Postage
.42 Points to Which Mailable
.43 Where to Mail
.44 How to Mail
.45 Firm Mailing Books
912.5 Delivery
.51 Procedure
.52 Notice of Arrival
913 Insured Mail
913.1 Description
.11 Purpose
.12 What May Be Insured
.13 What Cannot Be Insured
913.2 Fees and Liability
.21 Fees
.22 Payment of Fees and Postage
913.3 Additional Services
.31 Restricted Delivery
.32 Return Receipt
913.4 Mailing
.41 Where to Mail
.42 Inquiry As to Contents and Preparation
.43 Individual Receipts for Mailing
.44 Firm Mailings
.45 Mailing on Rural Routes and at Nonpersonnel Rural Units
.46 Endorsements
913.5 Delivery
.51 General Provisions
.52 At Letter Carrier Offices
.53 At Offices Not Having Carrier Delivery Service
.54 Rural Delivery
.55 On Highway Contract Routes
.56 Damaged Packages
.57 Spoiled Contents
.58 Examination of Mail
913.6 Delivery Receipts
.61 Unnumbered Packages
.62 Numbered Packages
914 Collect on Delivery Mail
914.1 Description
.11 Purpose
.12 What May Be Sent COD
.13 Conditions
.14 What May Not Be Sent COD
.15 Restrictions on COD Service to Military Installations
.16 Service With U.S. Possessions and Territories
.17 Additional Services
.18 Delays in Remittance
914.2 Fees
.21 In Addition to Postage
.22 Payment of Fees and Postage
914.3 Mailer Printed Tags
.31 Approval
.32 Basic Tag Requirements
.33 Nursery Stock Shipments
914.4 Mailing
.41 Preparation for Mailing
.42 Where to Mail
914.5 Delivery
.51 Procedure
.52 Notice of Arrival
915 Special Delivery
915.1 Description
915.2 Points of Delivery
915.3 Dispatch and Transportation
915.4 Payment
.41 Fees
.42 Prepayment of Fee
915.5 Marking
915.6 Forwarding
916 Special Handling
916.1 Description
916.2 Fees
916.3 Marking
916.4 Forwarding
917 Business Reply
917.1 Description
917.2 Permit
917.3 Postage and Fees
.31 Annual Fee
.32 Third Party Arrangements
.33 Advance Deposit Trust Account
.34 Amount Collected
.35 Addressed to Different Firms
.36 Payment of Postage
.37 Amount
.38 Cards
.39 With Postage Affixed
917.4 Piece Count for Bulk Quantities
917.5 Format
.51 General
.52 Required Format Elements
917.6 Illustration of Business Reply Mail
917.7 Distribution
917.8 Permit Holder
918 Parcel Airlift
918.1 Definition
918.2 Description of Service
918.3 Physical Limitations
918.4 Fees
918.5 Marking
920 [Reserved]
930 Supplemental Mail Services
931 Certificates of Mailing
931.1 Purpose
931.2 Fees
.21 Individual Pieces
.22 Bulk Pieces
931.3 Forms
.31 Who Prepares
.32 Individual Certificates
.33 Firm Mailing Books
.34 Bulk Mailings
.35 Quantity Mailings
931.4 Additional Certificates After Mailing
931.5 Payment and Certification
931.6 Payment and Certification for Official Mail

932 Return Receipts
932.1 Purpose
932.2 Fees
932.3 Procedures at Mailing Office
932.4 Refunds
933 Restricted Delivery
933.1 Purpose
933.2 Fee
933.3 Procedures
.31 At the Time of Mailing
.32 After Mailing
933.4 Authorization of an Agent
933.5 Refunds
940 Nonmail Services
941 Money Orders
941.1 Issuance
.11 Where Sold
.12 Amounts, Fees, and Payment
.13 Issuance Procedures
.14 Issuance to Rural Customers
.15 Spoiled or Incorrectly Prepared Money Orders
.16 Money Orders Lost, Damaged, or Improperly Endorsed
941.2 International Money Orders
941.3 Cashing
.31 Restrictions on Payment
.32 Where To Cash
.33 Signature Requirements
.34 Payment to Other Than Payee
.35 When Orders Will Not Be Paid
.36 Identification of Payee
941.4 Request for Photostats of Paid Money Orders
941.5 General
941.6 Payment to Banks through Federal Reserve System
.61 Presentation for Payment
.62 Definitions
.63 Payment
.64 Endorsements
.65 Reclamation
942 Nonpostal Stamps
942.1 Migratory-Bird Hunting and Conservation Stamps
.11 Purpose
.12 Where Sold
.13 Price
.14 Instructions on Administration of Hunting Laws
.15 Redemption From Public
942.2 United States Savings Stamps
.21 Redemption From Public
.22 Mutilated Stamps
943 United States Savings Bonds
944 Postal Savings
944.1 System Discontinued
944.2 Records of Accounts
944.3 Withdrawals
944.4 Inquiries From Depositors and Claimants
945 Mailing List Service
945.1 Correction of Mailing Lists
.11 Purpose
.12 Service Available
.13 Name and Address Lists
.14 Occupant Lists
.15 Charges
.16 Postage
.17 Time Limits
945.2 Furnishing Address Changes to Election Boards and Registration Commissions
945.3 Address Cards Arranged in Sequence of Carrier Delivery
945.4 Furnishing City and State Schemes
945.5 ZIP Coding Mailing Lists
.51 Single-ZIP-Coded Offices
.52 Multi-ZIP-Coded Post Offices
950 Alternate Delivery Services
951 Post Office Lockbox Service
951.1 Purpose and Definition
.11 Purpose
.12 Definition
.13 How to Rent a Lockbox
.14 Conditions of Use
.15 Restrictions on Use
951.2 Rental Fees
.21 Change in Fees
.22 Key Fee
.23 Rental Fee Group Application Rules for Customers
.24 General Delivery
.25 Facilities Primarily Serving Academic Institutions
.26 Rental Fees
.27 Payment of Box Rent
.28 Notices
.29 Refund of Box Rent
951.3 Keys
.31 Issuance
.32 Restrictions
.33 New Keys
.34 Worn or Broken Keys
.35 Refund of Key Fee
951.4 Refusal to Provide Service
.41 To a New Customer
.42 To a Current Customer
.43 Disposition of Mail
952 Caller Service
952.1 Purpose and Definition
.11 Purpose
.12 Definition
.13 General Information
.14 Application
.15 Conditions of Use
.16 Restriction on Use
952.2 Fees
.21 Reserved Number Fee
.22 Caller Service Fees
.23 Payment
.24 Notices
.25 Refund
952.3 Mail Pickup
.31 Multi-Pickup Callers
.32 Hours
952.4 Refusal to Provide Service
.41 To a New Customer
.42 To a Current Customer
.43 Disposition of Mail
953 General Delivery
953.1 Use
953.2 Where Carrier Deliveries Are Provided
954 Firm Holdouts

CHAPTER 1

DOMESTIC MAIL SERVICES

110 General Information

111 Scope

111.1 General. This manual contains the regulations of the United States Postal Service governing its domestic mail services. These regulations include the rates for postage and restrictions on its use, descriptions of the classes of mail and special services and conditions governing their use, requirements for wrapping and mailing, explanations of collection and delivery services, and general provisions concerning the use of postal services and facilities.

111.2 Definition

a. Domestic mail is mail transmitted within, among and between the United States; its territories and possessions; Army-Air Force (APO) and Navy (FPO) post offices except as provided in 115.0; and mail for delivery to the United Nations, New York. The term *territories and possessions includes:*

U.S. Territories and Possessions

Baker Island
Canal Zone
Canton Island
Caroline Islands
Enderbury Island
Guam
Howland Island
Jarvis Island
Johnston Island
Kingman Reef
Manua Island
Marshall Islands
Midway Islands
Navassa Island
Commonwealth of the Northern Mariana Islands
Commonwealth of Puerto Rico
Saint Croix Island
Saint John Island
Saint Thomas Island
Samoa (American)
Sand Island
Swain's Island
Trust Territory of the Pacific
Virgin Islands (U.S.)
Wake Island

b. Mail addressed to or received from foreign countries is international

mail and is governed by the provisions of Postal Service Publication 42, *International Mail.*

111.3 Mailer Responsibility. Notwithstanding any statement contained in this manual or the statements of any employee of the United States Postal Service, the burden rests with the mailer to assure that he has complied with the prescribed laws and regulations governing domestic mail.

111.4 Applicability of Terms

.41 Any terms used in this manual which relate to only one sex, such as the pronoun *he,* apply to persons of either sex unless the context of the usage indicates otherwise.

.42 Any terms used in this manual in the singular form apply in the plural form as well, unless the context of the usage indicates otherwise.

.43 The term *postmaster* applies to an officer-in-charge if there is a vacancy in the postmaster position.

111.5 Availability and Distribution

.51 Copies of the *Domestic Mail Manual* (DMM) are available for inspection upon request at USPS Headquarters, regional offices, and all domestic post offices, and stations and branches during normal business hours. Regional offices are located in New York, Philadelphia, Memphis, Chicago, and San Bruno, California.

.52 A copy of the DMM is on file with the Director, Office of the Federal Register, National Archives and Records Service, General Services Administration, Room 8401, 1100 L Street, NW, Washington, DC 20408.

.53 Copies of the DMM may be purchased from the Superintendent of Documents, U.S. Government Printing Office, Washington, DC 20402, for $17.00. This price includes entitlement to receive, for an indefinite period, subsequent issues (i.e., revisions).

.54 Revisions to the DMM will periodically be published in the Federal Register. Subscribers to the DMM will automatically receive the revisions from the Government Printing Office.

112 Who May Carry Letters

113 Service in Post Offices

114 Complaints

114.1 Consumer Complaints

.11 Complaints by individual customers about any aspect of products, services, or personnel as well as information requests may be made at any post office or regional office. In order to assist the general public in filing complaints or requesting information, Form 4314, *Consumer Service Card,* is made available in every post office.

.12 Although submitting Form 4314 is recommended as an initial step, any customer may choose to direct a complaint to the Consumer Advocate, U.S. Postal Service, Washington, DC 20260. *Note:*

a. When the complaint concerns apparent mishandling of mail, the related envelope, wraper, or other cover, along with other forms which may have been filed or used, should be furnished with the complaint.

b. The filing of a *Consumer Service Card* does not constitute an appeal to the Consumer Advocate; such appeal must be made in writing directly to the Consumer Advocate, USPS Headquarters, Washington, DC 20260.

.13 The Consumer Advocate directs the Consumer Affairs Office which is responsible for:

a. Representing the individual mail user within the Postal Service.

b. Recommending policy changes to improve an individual user's mail service.

c. Maintaining liaison with consumer groups.

d. Taking expeditious action on customer inquiries and complaints.

e. Determining that the responsible office take corrective action.

f. Providing regular reports based upon Consumer Service Card data to Headquarters and field management facilities.

115 Mail Security

116 [Reserved]

117 [Reserved]

118 [Reserved]

119 Trademarks, Service Marks and Copyrights

119.1 Trademarks and Service Marks. The following terms and slogans are among the registered trademarks and service marks of the United States Postal Service:

Registered U.S. Postal Service Trademarks or Service Marks

Express Mail
Expres Mail Programmed Service
First-Class Mail
Here Today . . . There Tomorrow
International Express Mail
Mr. ZIP
Postique
United States Postal Service
U.S. Mail
ZIP Code
The distinctive red, white and blue color scheme of postal vehicles
The Postal Service emblem and the U.S. Mail emblem

Note: Additions to the list of Postal Service trademarks are announced periodically in the Postal Bulletin.

119.2 Copyrights

.21 General. The Postal Service secures copyrights in its philatelic designs (see *Postal Operations Manual* section 246) and in some of its publications.

.22 National ZIP Code and Post Office Directory.

.221 The Postal Service copyrights each edition of the *National ZIP Code and Post Office Directory,* Publication 65, in order to protect the accuracy and integrity of the ZIP Code information being distributed to the public. The 1979 *National ZIP Code and Post Office Directory* is available for purchase from all main post offices, classified stations and branches. The Directory is also available for purchase from the Superintendent of Documents, U.S. Government Printing Office, Washington, DC 20402, and at GPO Bookstores in major cities.

.222 The Postal Service licenses publishers on a non-exclusive basis to reproduce and sell Publication 65 or portions thereof, as long as the portions cover a complete state or a combination of states and include full ZIP Code information for multi-ZIP Coded post offices. The licenses are on an annual basis and may be renewed. The license agreements contain the following significant terms:

a. Only the most current available ZIP Code information printed from reproducibles furnished by the Postal Service shall be published.

b. Each Directory must bear an expiration date consistent with the expiration date of the material reproduced. (Publication 65 is published annually and expires at the end of the calendar year.)

c. All manuscripts and proposed advertising and promotional materials are subject to prior review by the Postal Service. Advertising and promotional materials may not mis-state the licensee's relationship to the Postal Service and must indicate that the Postal Service does not determine the price at which the licensed publication is sold.

d. A royalty on sales will be paid to the Postal Service at a rate negotiated before the license is granted. Under certain circumstances, a flat fee or no royalty agreement may be negotiated.

119.3 Inquiries

.31 Questions concerning Postal Service copyrights or the use of Postal Service trademarks and service marks should be addressed to the Procurement Division, Office of Contracts and Property Law, Law Department, U.S. Postal Service, Washington, DC 20260.

.32 Inquiries concerning licenses to publish or reproduce the *National ZIP Code and Post Office Directory* or other copyrighted materials or to use Postal Service trademarks or service marks should be addressed to the Chairman, Intellectual Property Rights Board, Office of Contracts, U.S. Postal Service, Washington, DC 20260.

120 Preparation for Mailing

121 Packaging

122 Addresses

* * * * *

122.8 Military Mail

.81 Overseas Military Mail

.811 Army. Mail addressed to Army personnel must show grade; full name, including first name and middle name or initial; organization; APO number and the post office through which the mail is to be routed. *Example.*

Pvt. Willard J. Doe,
Company F
167th Infantry Regt.
APO New York 09801

.812 Air Force. Mail addressed to Air Force personnel must show grade; full name, including first name and middle name or initial; PSC box number if served by a PSC, or organization if not served by a PSC (and box number, if appropriate); APO number and the post office through which the mail is to be routed. *Examples:*

Personnel Served By PSC

A1C Howard J. Doe
PSC Box 861
APO New York 09109

Personnel Served By Unit Mail Room

SSgt James T. Duncan
1838 Elect Instl Sq, Box 137
APO San Francisco 96274

.813 Navy and Marine Corps. Mail addressed to Naval and Marine personnel must show full name, including first name and middle name or initial, rank or rating, shore based organizational unit with Navy number, or mobile unit designation, or name of ship, and the fleet post office through which the mail is to be routed. *Examples:*

John M. Doe QMSN
USS Lyman K Swenson (DD 729)
FPO San Francisco 96601

Maj. John M. Doe, O23492 USMCR
Staff, Fleet Marine Force Pacific
FPO San Francisco 96602

James T. Doe, AQF-2
U.S. Naval Air Facility
FPO New York 09521

Lt. Leroy A. Doe, O63941, USMC
U.S. Marine Corps Air Facility
FPO San Francisco 96672

.814 Dependents Residing With Military Personnel. Mail sent to dependents residing in overseas areas must be addressed in care of the sponsor. *Example:*

Miss Mary J. Doe
c/o Sgt. Howard A. Doe
Company A, 1st Bn. 16th Inf.
APO New York 09036

.815 Abbreviated Addresses. Those mailers addressing mail by data processing equipment may shorten the address further by abbreviating the name of the gateway post office. *Example:*

APO NY 09403
APO SF 96503
APO SEA 98749

.82 Military Mail Within United States

.821 Army. Mail addressed to Army personnel must show grade; full name, including first name and middle name or initial; organization; military installation, State, and the ZIP Code. *Example:*

Pvt. Willard J. Doe
Co B, 1st Bn, 12th Infantry
Fort Lewis, WA 98433

.822 Air Force. Mail addressed to Air Force personnel must show grade; full name, including first name and middle name or initial; PSC box number if served by a PSC, or organization if not served by a PSC (and box number, if appropriate); military installation, State, and the ZIP Code. *Examples:*

Personnel Served By PSC

Sgt John Goleski
PSC Box 1843
Vandenberg AFB, CA 93437

Personnel Served By Unit Mail Room

A1C Walter J. Larkin
1 Strat Aerosp Div, Box 107
Vandenberg AFB, CA 93437

.823 Navy and Marine Corps. Mail addressed to Naval and Marine personnel must show full name, including first name and middle name or intitial, rank or rating, organization, military installation and the ZIP Code. *Examples:*

Bill E. Smith, SK3
U.S. Naval Supply Depot
Great Lakes, IL 60088

M/Sgt Peter V. Perez, 1342165 USMC
Headquarters Battalion
Headquarters U.S. Marine Corps
Henderson Hall
Arlington, VA 22214

.824 Dependents Residing With Military Personnel

a. Mail sent to dependents of military personnel for delivery through the sponsor's military unit in care of the sponsor. *Example:*

Master Robert Brown
c/o Sgt. Michael Brown Company
A, 6th Bn., 10th Inf.
Fort Gordon, GA 30905

b. Mail sent to dependents of military personnel for delivery at the sponsor's military quarters need not be addressed in care of the sponsor. *Example:*

Master Robert Brown
2519 C Street
Wright-Patterson AFB, OH 45433

.83 Geographic Address. Mail showing a foreign city and country in adddition to the military address is subject to the rates of postage and conditions for international mail. (See Publication 42, *International Mail.*)

123 Nonmailable Matter—Written, Printed, and Graphic

123.1 General Provisions

.11 Scope. Certain potentially undesirable, harmful, or dangerous matter has been declared nonmailable by statute or regulation. This part contains the rules relating to such nonmailable matter in written, printed or graphic form. The rules relating to nonmailable articles and substances and the special conditions under which certain of them can be mailed are contained in 124.

.12 Rules. This part contains rules on advising mailers on mailings of matter covered in 123 and 124. These rules restrict postmasters in making decisons to exclude written, printed and graphic matter from the mails as nonmailable (see 123.3).

.13 Other Nonmailable Matter. Matter is also nonmailable when it cannot be forwarded to its destination because of illegible, incorrect, or insufficient address, or because it fails to comply with postal regulations regarding preparation for mailing, classification, rates of postage, size, weight, etc.

123.2 Mailer's Responsibiltiy. It is the responsibility of the mailer to refrain from depositing nonmailable matter in the mails. When a mailer is in doubt as to whether particular matter is nonmailable, he should ask of the postmaster before depositing such matter in the mails (see 123.3).

123.3 Advice to Mailers—Mailability Decisions

.31 General Advice. When a mailer seeks advice from the postmaster as to whether particular matter may be mailed, or where the postmaster otherwise learns that matter of questionable mailability is to be mailed, it is the postmaster's responsibility to call to the mailer's attention the relevant provisions of 123 and 124 and any relevant guidelines issued by the Postal Service. The scope of the postmaster's authority to decide whether particular matter is nonmailable, and to exclude matter from the mails in accordance with his decison, depends upon the nature of the matter in question and is determined by this section.

.32 Mailability Decision Not Authorized. Postmasters are *not* authorized to decide whether written, printed or graphic matter (123) is nonmailable and to exclude such matter from the mails in accordance with their decisions. As stated in 123.31, postmasters should call the attention of prospective mailers of such matter to any apparently relevant provisions of 123. If, after being so informed, the mailer demands that matter described in 123 be accepted for mailing, such matter shall be accepted and shall be treated as provided in 123.35.

.33 Authorized Mailability Decisions. Postmasters *may* decide whether articles and substances (see 124) are nonmailable and shall, where appropriate, refuse to accept for mailing such matter determined to be nonmailable. Where necessary, it is recommended that the postmaster consult the mail classification center for guidance in determining mailability. If the mailer desires review of the postmaster's decision, the postmaster shall refer a sample or complete statement of the facts, whichever may be appropriate, to the Director, Office of Mail Classification, Rates and Classification Department, USPS Headquarters, Washington, DC 20260. Further appeal may be made in accordances with 123.37.

.34 Laws and Regulations of Other Agencies. Postmasters shall not give advisory opinions concerning the mailing of articles and substances (see 124) under laws and regulations administered by agencies other than the Postal Service, but postmasters shall inform postal customers of the existence of such laws and regulations, and the source from which further information may be obtained, when known. For example, postal customers with questions about the interstate shipment of rifles and shotguns should be referred to the Director, Bureau of Alcohol, Tobacco and Firearms, Department of the Treasury, Washington, DC 20226, or to the nearest regional director of that Bureau.

.35 Referral to the Inspection Service.

.351 Mail matter, believed to be nonmailable under this part, that has entered the mails, or a report containing information on such matter, shall be referred immediately to the Inspection Service and the matter shall be handled in accordance with instructions promptly furnished by the inspection Service.

123 Nonmailable Matter—Written, Printed, and Graphic

124 Nonmailable Matter—Articles and Substances; Special Mailing Rules

125 Mail Addressed From, To, or Between Military Post Offices Overseas

126 Mail Sent Via Department of State to U.S. Foreign Service Personnel Abroad

127 Minimum Sizes

The following minimum size standards apply to all mailable matter:

a. All mailing pieces must be at least .007 of an inch thick.

b. All mailing pieces (other than keys and identification devices mailed pursuant to 611.4) which are ¼ of an inch thick or less must be:

(1) Rectangular in shape,

(2) At least 3½ inches high, and

(3) At least 5 inches long.

Note: Mailing pieces which do not meet these minimum size standards are prohibited from the mails.

128 Processing Categories

129 Envelopes and Cards

* * * * *

129.3 Window Envelopes. Window envelopes, or open panel envelopes, may be used under the following conditions:

a. The address window must be parallel with the length of the envelope.

b. The address window must be in the lower portion of the address side.

c. Nothing but the name, address, and any key number used by the mailer may appear through the address window.

d. The return address should appear in the upper left corner. If there is no return address and the delivery address does not show through the window, the piece will be handled as dead mail.

e. The address disclosed through the window must be on white paper or paper of a very light color.

f. When used for registered mail, window envelopes must conform with the conditions in 911.35.

g. Window envelopes and open panel envelopes, may be used for business reply mail provided:

(1) All of the address side except the portion which will show through the window is prepared as required by 917.5.

(2) An address prepared by any of the processes and in the style provided by 917.5 is furnished by the distributor for use as an enclosure to return the envelope.

(3) The window covering is of such texture as to allow maximum transparency.

130 Mail Classification

131 Classes of Mail

131.1 Domestic mail is classified according to size, weight, contents, and service. Chapters 2 through 7 describe the various classes of mail, and the qualifications, preparation requirements, and services provided for each class. Chapter 9 describes the special services which are available on certain classes of domestic mail. Mailers should familiarize themselves with the qualifications, requirements, and conditions governing the classfication of their mail.

131.2 Questions regarding the proper classification of mail matter should be directed to local postal officials. Mail Classification Centers (MCCs) have been established to assist local post offices in responding to mail classification questions. However, the burden rests with the mailer to assure that he has complied with all prescribed laws and regulations.

132 Mail Classification Centers

EASTERN REGION		
MCC	Districts	3-Digit ZIP Code Service Area
Rochester, NY 14603	Empire	130-143
Pittsburgh, PA 15219	Allegheny Mountaineer	150-168, 248-253, 255-259, 261-266, 268
Philadelphia, PA 19104	Delaware Valley	060-087, 189, 190-191, 193-194, 197-199
Washington, DC 20013	Maryland-DC	200, 202-212, 214-223, 226, 254, 267
Richmond, VA 23232	Virginia	224-225, 227-245

132 Mail Classification Centers—Continued

NORTHEAST REGION

MCC	Districts	3-Digit ZIP Code Service Area
Boston, MA 02109	Boston	014-054, 056-059
	Portland (ME)	
	White River Junction	
New York, NY 10001	NY City	006-009, 090-098,100, 103-104, 110-119
	Long Island	
	Caribbean	
Hartford, CT 06101	Connecticut Valley	010-013, 060-069
Albany, NY 12207	Westchester	105-109, 120-129
Newark, NJ 07102	No. NJ	070-079, 088-089

SOUTHERN REGION

MCC	Districts	3-Digit ZIP Code Service Area
Atlanta, GA 30304	Atlanta	289, 298-299, 300-306, 308-310, 312-319, 350-352, 354-368
Charlotte, NC 28202	Carolina	270-288, 290-297
New Orleans, LA 70113	Delta	369, 387, 389-397, 700-701, 703-708, 710-714
Dallas, TX 75221	E. Texas	718, 750-752, 754-767, 770-778
Memphis, TN 38101	Mid-South	307, 370-374, 376-386, 388, 716-717, 719-722, 724-729
Miami, FL 33152	Florida	320, 322-331, 333-339
Oklahoma City, OK 73125	Oklahoma	730-731, 734-741, 743, 749, 790-794
San Antonio, TX 78205	W. Texas	768-769, 779-789, 795-799

CENTRAL REGION

MCC	Districts	3-Digit ZIP Code Service Area
Chicago, IL 60607	Northern Illinois	463-464, 600-606, 609-611, 613-619, 625-627
Columbus, OH 29201	Buckeye	410, 430-438, 448-450, 458, 470
Cleveland, OH 44101	Northeastern Ohio	439-447
Des Moines, IA 50318	Iowa	500-508, 510-514, 520-528, 612
Detroit, MI 48233	Michigan	480-482, 484-497
Indianapolis, IN 46206	Indiana	460-462, 465-469, 472-475, 478-479
Kansas City, MO 64108	Mid-America	640-641, 644-647, 653, 660-662, 664-679
Louisville, KY 40201	Kentuckiana	400-409, 411-418, 420-426, 476-477
Milwaukee, WI 53203	Greater Wisconsin	498-499, 530-532, 534-535, 537-539, 541-545, 549
Minneapolis, MN 55401	North Star Dakotas	540, 546-548, 550-551, 553-554, 556-562-567, 570-577, 580-588
Omaha, NE 68101	Nebraska	515-516, 680-681, 683-693
St. Louis, MO 63155	Gateway	620, 622-624, 628-631, 633-639, 648, 650-652, 654-658

WESTERN REGION

MCC	Districts	3-Digit ZIP Code Service Area
Denver, CO 80202	Rocky Mountain	590-599, 800-816, 820-834, 836-837
	Western Slopes	840-847, 865, 870-871, 873-875, 877-884, 893, 898
Honolulu, HI 96820	Pacific	967-969
Los Angeles, CA 90052	Angeles Sequoia	900, 902-908, 910-918, 926-928, 930-935
Phoenix, AZ 85026	Sunland	850, 852-853, 855-857, 859-860, 863-864, 890-891, 920-925
San Francisco, CA 94010	Golden State Sierra	894-895, 897, 936-941, 943-966
Seattle, WA 98101	Northwestern Alaska	835, 838, 970-978, 980-999

133 Appeal of a Contested Classification

134 Mail Sent By Members of the U.S. Armed Forces

135 For the Blind and Other Handicapped Persons

136 Mixed Classes of Mail

136.1 General. When mail of a higher class is enclosed with mail of a lower class, the rate of postage on the entire piece or package is that of the higher class except as provided in 136.2 and 136.3. Mailers are subject to a fine if they knowingly conceal letters or other mail of a higher class (or rate) in mail sent at a lower class (or rate) without paying the appropriate postage on the enclosures as provided in 136.2 and 136.3 (see Title 18 U.S.C., 1723).

* * * * *

136.4 Treatment

.41 Service. Combination mailings of First-Class Mail with third- or fourth-class mail will be processed and provided the service of third- or fourth-class mail as appropriate.

.42 Forwarding. Pieces of second-, third-, or fourth-class mail having other classes of mail enclosed under the combination mail arrangements provided for by 136.2 are subject to the same conditions for forwarding as single pieces of second-, third-, or fourth-class mail (see 159.2). If the enclosure is First-Class Mail, that fact will not affect the conditions of fowarding.

.43 Return

.431 Undeliverable combination mail pieces, including those which cannot be forwarded, one part of which is First-Class Mail, shall in all cases be returned to the sender subject to the charge for return according to its class. The weight of the first-class piece will not be included when computing the charge for return of the second-, third-, or fourth-class portion.

.432 Any undeliverable combination mailing piece which does not include first-class matter shall be disposed of as provided in 159.

.433 If for any reason an undeliverable combination mailing piece, one part of which is First-Class Mail, is not returnable to the sender, it will be treated as provided in 159.

137 Official Mail

137.1 Members of Congress

.11 Collection of Postage, Fees, and Charges. Postage, fees, and charges, on mail sent under the franking privilege by the Vice President, Members and Members-elect of Congress, Delegates or Delegates-elect, the Resident Commissioner or Resident Commissioner-elect from Puerto Rico, the Secretary of the Senate, Sergeant at Arms of the Senate, each of the elected officers of the House of Representatives (other than a Member of the House), Legislative Counsel of the House of Representatives, and the Senate, and Senate Legal Counsel are paid quarterly by a lump sum to the Postal Service.

.12 Description. Official mail of Members of Congress is sent without prepayment of postage and bears a written signature, printed facsimile

signature or other required marking instead of a postage stamp. The types of mail matter accepted under frank, and the officials authorized to use franked mail are shown in Exhibit 137.12.

.13 Restrictions. The following restrictions apply to franked mail:

Franked Mail

Authorized users	Matter that may be franked	Marking required	Period during which the frank may be used
Vice President of the United States, Members of Congress, Resident Commissioners, Secretary of the Senate, Sergeant at Arms of the Senate, and each of the elected officers of the House of Representatives (other than Members of the House).	Public documents printed by order of Congress.	The words *Public Document*—and the letters U.S.S. or M.C. must appear on the address side.	Until the 1st day of April following expiration of their respective terms of office.
Members of Congress and Resident Commissioners.	Congressional Record or any part of it or any reprint of any part of it or speeches or reports contained in it, if relating to official business, activities or duties.	The words *Congressional Record* or *Part of Congressional Record*—and the letters U.S.S. or M.C. must appear on the address side.	During the term of office only.
Members of Congress	Seeds and agricultural reports from the Department of Agriculture.	The signature and title, either written or printed facsimile, of the person entitled to frank it, must appear on the address side.	Until the 30th day of June following the expiration of their terms of office.
Vice President of the United States, Members and Members-elect of Congress, Resident Commissioners, Secretary of the Senate, Sergeant at Arms of the Senate, each of the elected officers of the House of Representatives (other than a Member of the House), Legislative Counsels of the House of Representatives and the Senate, and Senate Legal Counsel.	Official correspondence including Mailgrams.	Mailgrams may be sent in standard Mailgram envelopes. For other correspondence, the signature and title, either written or printed facsimile, of the person entitled to frank it, must appear on the address side.	During term of office only. When the position of Secretary, Sergeant at Arms, elected officer, Legislative Counsel, or Senate Legal Counsel is vacant, privileges may be exercised in officer's name by authorized persons.
Vice-President-elect	All mail sent by him in connection with preparation for the assumption of official duties as Vice President.	The signature and title, either written or printed facsimile, of the Vice-President-elect must appear on the address side.	Until assumption of duties as the Vice President.
Former Vice President, each former Member of Congress, the former Secretary of the Senate, the former Sergeant at Arms of the Senate, each former elected officer of the House (other than a former Member of the House), and each former Delegate or Resident Commissioner.	Matter on official business related to the closing of their respective officers.	The signature and title, either written or printed facsimile, of the person entitled to frank it, must appear on the address side.	During the 90-day period immediately following the date on which he leaves office.
Former Speakers of the House	Public documents, seeds and agricultural reports from the Department of Agriculture, official correspondence including Mailgrams.	The signature and title, either written or printed facsimile, of the former Speaker, or appropriate Mailgram or public document marking as indicated above, must appear on the address side.	For as long as the former Speaker determines necessary.

Exhibit 137.12—Franked Mail

a. Matter transmitted under frank of the Vice President, each Member of or Member-elect to Congress, the Secretary of the Senate, the Sergeant at Arms of the Senate, each of the elected officers of the House of Representatives (other than a Member of the House), each Delegate or Delegate-elect, the Resident Commissioner or Resident Commissioner-elect, each Legislative Counsel of the House and the Senate, and Senate Legal Counsel must relate to the official business, activities, and duties of the Congress of the United States.

b. Matter transmitted under frank of the former Vice President, each former Member of Congress, the former Secretary of the Senate, the former Sergeant at Arms of the Senate, each former elected officer of the House of Representatives (other than a former Member of the House), and each former Delegate or Resident Commissioner must be on official business relating to the closing of his respective office.

c. A person entitled to use franked mail may not loan his frank, or permit its use by any committee, organization, or association; or permit its use by any person for the benefit or use of any committee, organization, or association. This restriction does not apply to any committee composed of Members of Congress.

d. Franked mail must meet the mailability criteria established in 123 and 124.

e. Franked mail is entitled to any special services for which it is properly endorsed.

f. Franked mail is handled as ordinary mail.

g. Franked mail is forwarded like any other mail, but when once delivered to the addressee it may not be remailed. A package of franked pieces may be sent by a person entitled to the franking privilege to one addressee, who, on receiving and opening the package, may on behalf of such person place addresses on the franked articles and mail them.

h. Franked mail must be addressed to the recipient by name, except as provided in 122.442.

.14 Weight and Size Limits. Franked mail must conform to the weight, size and shape requirements for the class of mail being used.

.15 Forwarding Mailing Records for Franked Mail

.151 Post offices serving the offices of persons entitled to use the franking privilege must record on Form 103, *Originating Franked Mail,* the number of pieces of originating franked mail, the dollar value of special service fees, the number of incoming address corrections and the dollar value of incoming postage due items processed during each accounting period. The value of special service fees paid with postage affixed will not be recorded on the form. Do not report on Form 103 mail endorsed second-class, controlled circulation rate or third-class bulk rate. The original Forms 3541 and 3602-PC must be submitted to Headquarters for such mailings. See 122.514c for post office reporting procedures for mailing lists submitted for correction by persons entitled to use the franking privilege. Forms 103, 3542 and 3602-PC prepared for franked mailings must be forwarded to the following office for billing purposes:

Revenue Statistics Branch
Office of Statistical Programs & Standards
U.S. Postal Service Headquarters

(Attn: Originating Franked Mail)
Washington, DC 20260

.152 Submit the completed form(s) in one batch no later than five working days after the close of each accounting period. A separate report must be submitted for each accounting period and should include all mailings for that accounting period only. Reports on Form 103 are not required by postmasters regarding revenue due the Postal Service on *POSTAGE AND FEES PAID* matter sent by agencies and departments of the Federal Government.

.153 Occasional franked mailings made at other post offices not regularly serving local Congressional offices may be reported by the originating post offices on Form 13, *Routing Slip*, or by memorandum.

.154 Post Offices regularly serving local Congressional offices must submit negative reports if no franked mail items are processed during an accounting period. Submission of negative reports by other post offices where occasional mailings originate is not required.

140 Postage

141 Stamped Envelopes, Postal Cards, Aerogrammes

142 Adhesive Stamps

143 Precanceled Stamps

144 Postage Meters and Meter Stamps

* * * * *

144.3 Setting Meters

* * * * *

.35 On-Site Meter Setting Program

.351 General

a. This program provides for meter settings to be made by a Postal Service clerk on a regular basis where the meter is licensed within the area covered by that post office.

b. Fees for on-site meter setting are:

Private Businesses

$7.00 First meter on scheduled basis
$12.00 First meter on emergency basis
$3.50 each additional meter

Meter Company Offices

$5.00 each meter on a scheduled basis

.352 Setting Meter at Customers' Place of Business.

a. Payment for postage set into the meter and for the meter setting fees involved must be collected prior to leaving the customer's place of business. Payment must be by check. If more than one meter is involved, payments for all postage and fees may be combined into one check.

b. Meter setting fees for meter manufacturers may be paid either by check or through an advanced deposit account.

* * * * *

144.5 Mailings

.51 Preparation

.511 The mailer must bundle, box, or otherwise package mailings of 5 or more letter-type pieces with the addresses facing in one direction. This prevents the pieces from becoming mixed with other mail which has to be faced, canceled, and postmarked in the post office. Each class and denomination should be bundled separately. Mail receiving special delivery service should always be bundled separately or located on the top of a bundle. Properly prepared metered mail is sent directly to distribution and thereby is expedited in dispatch.

.512 Metered mail not properly bundled, boxed, or otherwise packaged as required will be reported by telephone or personal visit to the mailer or his authorized agent. A record of this action will be maintained by the postmaster on Form 3749. *Irregularities in the Preparation of Mail Matter.* If the mailer or his agent disregards such reports and irregularities are repeated, the mail will be retained by the postmaster and the mailer immediately notified by telephone so that the mailing can be picked up for proper preparation before acceptance and dispatch.

.52 Place of Mailing.

.521 Metered mail, other than bulk mailings of third-class mail may be deposited in any street collection box, mail chute, receiving box, cooperative mailing rack, or other place where mail is accepted, which is under the jurisdiction of the post office shown in the meter stamp. To secure faster dispatch, metered mail should be deposited at the main post office or a station or branch thereof.

.522 To expedite dispatch and as a convenience to meter users, limited quantities of special delivery and other First-Class Mail may be deposited at offices other than the one which appears in the meter stamp. A limited quantity is considered to be a handful.

.523 If facilities for acceptance are not available locally, customer-metered Express Mail may be mailed at an Express Mail acceptance facility under the jurisdiction of another office.

.53 Mailing Irregularities. Metered mail will be routinely examined by the Postal Service to detect irregularities in preparation and dating. Mailers will be notified of any irregularities. If a mailer disregards notification of repeated irregularities, the postmaster may refuse to accept the mail, or if the mail has already been accepted, he may return the mail with instructions to enclose it in new envelopes or other covers as appropriate.

145 Permit Imprints (Mail Without Affixed Postage)

145.1 Definition. Mailers may be authorized to mail material without affixing postage if payment of postage is made at the time of mailing from an advance deposit trust accout established with the Postal Service for that purpose. Each piece of mail sent by a mailer under this method of payment must bear a permit imprint to indicate that postage has been paid. This method of payment may be used to pay special service fees as well as postage.

145.2 Permit

.21 Application. A permit to use permit imprints and pay postage in cash at the time of mailing may be obtained by submitting Form 3601, *Application to Mail Without Affixing Postage Stamps*, with a fee of $30, to the post office where mailings will be made. The postmaster will give the applicant a receipt for the fee on Form 3544. There is no other fee for the use of permit imprints so long as the permit remains active. *Note:* the applicant must also pay an annual bulk mailing fee if he mails third-class matter at bulk rates. (See 612 and 641.)

.22 Revocation

.221 The permit will be revoked if used in operating any unlawful scheme or enterprise, for nonuse during any 12-month period, or for any noncompliance with the regulations governing the use of permit imprints.

.222 The permit holder will be notified by the postmaster if the permit is to be revoked and the reasons for revocation. Form 3604, *Nonuse of Mailing Permit or Meter License*, may be used if revocation is for nonuse.

.223 The permit holder may appeal the revocation to the postmaster. If no written statement of objection is filed by the permit holder within ten days, the postmaster will cancel the permit.

.224 If revocation is because of nonuse and the permit holder indicates that he will resume mailings within a 90 day period, the permit will be continued for a period not to exceed 90 days.

.225 If the postmaster does not grant the appeal, he must notify the customer.

.226 The permit holder may appeal the postmaster's decision to the General Manager, Domestic Mail Classification Division, Office of Mail Classification, USPS Headquarters, Washington, DC 20260. The appeal must be submitted in writing to the postmaster, who will

forward the appeal to the General Manager, Domestic Mail Classification Division, who will make the final administrative decision.

* * * * *

145.8 Optional Acceptance Procedure

.81 Objective. The purpose of this optional procedure is to provide for situations for which: (a) postage charges can be adequately verified by means other than weighing, (b) normal acceptance procedures are impractical, and (c) major savings to the Postal Service would result from use of an optional acceptance procedure.

.82 Qualification Requirements. Any permit imprint mailer whose mailings comply with the requirements of 145.6 may apply for authorization to use optional acceptance procedures. Optional procedure authorization will not be granted if: (a) mailings do not meet the requirements of 145.6, (b) the Postal Service cannot be assured of the receipt of proper postage revenues or (c) significant recoverable savings will not result for the Postal Service.

.83 Applications

.831 Filing Applications. Filing applications for authorization to use optional acceptance procedures must be submitted in writing by the mailer to the postmaster at the post office where mailings will be deposited. The applications must include:

a. A detailed outline of how it is proposed to make-up and process the mail.

b. A detailed description of how the amount of postage for a mailing would be determined and verified by the local post office.

c. A statement of the approximate costs, savings, and benefits expected to result for the Postal Service.

.832 Assessment of Application. An application will be reviewed by the postmaster and then forwarded via the sectional center manager and the district manager to the appropriate Region for consideration. The postmaster, sectional center manager, and district manager must each attach written and signed comments to the application clearly indicating whether they consider the proposal sound, cost effective, and practical. Each endorsement must indicate:

a. A recommendation to approve or disapprove.

b. Suggested procedures for acceptance, verification of proper mail make-up, processing, and audit.

(*1*) The postmaster must also:

(*a*) Suggest a method the district can use to verify the completeness and accuracy of the individual mailing verifications by the post office and

(*b*) clearly identify samples of all documents that would be used to substantiate the mailing statement.

(*2*) The sectional center manager must indicate the personnel who will perform the verification and examination function.

c. Estimates of costs, savings, and benefits to result for the Postal Service. *Note:* A detailed cost/benefit analysis will be done by the regions.

.84 Approval or Denial

.841 Items of Identical Weight. Applications for mailing of items of identical weight will be approved or denied by the Regional Postmaster General. This authority may only be delegated to the Regional Director, Finance Department. Approval will not be given if it appears that postal revenue cannot be protected under the final proposed procedures.

.842 Items of Different Weights. Applications for mailings of nonidentical weight must be forwarded by the Region to the Director, Office of Mail Classification, USPS Headquarters, Washington, DC, for approval or denial.

.843 Written Notification. The applicant will be notified in writing whether the application has been approved or denied. Optional procedure approvals will contain an expiration date no later than five years after the date of approval.

.85 Renewal of Authorizations. Authorizations may be renewed for periods up to five years by the Regional Director, Finance Department, upon written request from the mailer. This request must be submitted to the postmaster of the post office where the mailings are deposited.

.86 Revocation

.861 By Postal Service. A mailer, whose authorization is revoked, will be notified in writing of the cancellation and the reasons therefor. An authorization may be revoked or suspended by the region under the following circumstances:

a. Whenever it is established that a mailer has provided misleading or incorrect data. An authorization will be suspended, pending investigation, whenever there is indication that postal revenue is not fully protected. The Office of Mail Classification will be advised of all such revocations and suspensions. Future applications from such mailers must be referred by the region to the Office of Mail Classification.

b. Whenever it is discovered that procedures do not provide adequate revenue protection. The authorization may be renewed by the Regional Director, Finance Department, when the necessary corrective action is taken.

c. Whenever the procedures no longer meet the criteria established by this regulation.

d. Whenever no mailings are made under optional procedures over a six-month period.

e. Whenever it is noted that a mailer continues to present improperly prepared mailings.

.862 By Mailer. A mailer may terminate his participation in an optional procedure at any time by notifying the postmaster in writing. The postmaster will provide copies of the mailer's notice of revocation to the sectional center manager, district manager, and to the Regional Director, Finance Department. (A copy will also be sent to the Office of Mail Classification if the authorization was issued by that Office.)

.87 Mailing Acceptance

.871 Mailings will be accepted only at the facilities and in the manner specified in the Region's letter of authorization.

.872 The mailer must submit a statement of mailing (Form 3602 or 3605, *Mailing Statement*) with a sample mailing piece at or before the time of each mailing.

.88 Mailing Records

.881 Mailer's Responsibility. Mailers are responsible for the submission of accurate statements of mailing and the maintenance of accurate records. The Postal Service audit is directed only at detecting underpayment. The burden rests with the mailer to prove any overpayment of postage.

.882 General Requirement. Verification of postage is normally done through a Postal Service audit of records maintained by the mailer as a normal requirement of business:

a. Records used for verification of optional procedure mailings must be records which are, as a matter of routine, also maintained for production of other than optional procedure mailings.

b. All records must be labeled, as they are created as to the mailing (and/or order) to which they relate.

.883 Case Record. The mailer must prepare a case record for each mailing and maintain it centrally for three years. The purpose is to enable the Postal Service to audit the accuracy of the computations for individual mailings as well as for the aggregate of all mailings. Each case record must contain:

a. A sample of the mailing piece.

b. The mailing statement.

c. Sufficient source documents to permit reconciliation with the mailing statement.

.884 Additional Records. Sufficient additional records must be retained by the mailer to provide at least two methods of verifying the mailings which are acceptable to the region. The following are records that may be appropriate to meet this verification requirement:

a. Purchase order from mailer's client.
b. Production order on quantity.
c. Job order on quantity.
d. Machine production records (register readings).
(*1*) Assemblers
(*2*) Stuffing machines
(*3*) Collators
(*4*) Printers
(*5*) Wrapping and bundling machines
(*6*) Stitching machines
e. Weigh tickets.
(*1*) Pallets
(*2*) Consolidated weights
f. Billing to customer.
g. Computer listing of addresses.
h. Inventory records.

.885 Running Summaries. The mailer must maintain running summaries of mailings made in which the day of mailing, quantity, individual weight, total weight and total postage of each mailing are recorded.

145.9 Alternate Methods of Paying Postage

.91 Application Procedure

.911 All postage must be paid in accordance with the provisions of 146.1 unless an alternate method is approved in writing by the Director, Office of Mail Classification, Rates and Classification Department, USPS Headquarters.

.912 Mailers may request authorization to pay postage by an alternate method by submitting a written request to the postmaster at the office of mailing. The request must include a complete description of the type(s) of matter to be mailed, the proposed method of paying postage and a statement of the mailer's reasons for requesting the alternate method.

.913 The postmaster will forward the request to the Office of Mail Classification through his management sectional center, district, and regional director of finance. Postmasters may not accept mail under any alternate method of paying postage until a written authorization from the Director, Office of Mail Classification, is received.

.92 Conditions of Authorization

.921 Authorization to use an alternate method of paying postage may be granted by the Director, Office of Mail Classification, when the adoption of such a method would be in the best interests of the Postal Service and when postal revenue can be adequately protected. The authorization will specify the alternate method of postage payment to be used and the terms and conditions of its use, including a time limitation, if applicable.

.922 As a condition of authorization, the Director may require the mailer to agree to pay a surcharge to cover any damages suffered by the Postal Service from the incorrect payment of postage. An authorization to use an alternate method of postage payment may be revoked at any time by the Director, Office of Mail Classification, upon the issuance of a written notice to the mailer.

146 Prepayment and Postage Due

* * * * *

146.3 Collection of Postage Due

.31 Collected on Delivery. Customers must pay for postage due mail in cash only, prior to delivery to them. However, postage on quantity mailings found in private mail boxes will be collected as provided in 146.22.

.32 Use of Postage Due Stamps. Postage due stamps are only used to collect postage due on mail. They may not be used for any other payment of postage or fees.

.33 Use of Postage Stamps, Permit Imprints, or Customer Meter Strips. Postage stamps, permit imprints, and customer meter strips may not be used for payment of postage due.

.34 Advance Deposit. If postage-due collections amount to approximately $10 or more every 60 days, payment may be made by advance deposits of money.

147 Exchanges and Refunds

148 Revenue Deficiency

149 Indemnity Claims

150 Collection and Delivery

151 Private Mail Receptacles

152 Mail Deposit and Collection

* * * * *

152.5 Bulk Mailings. Mailings under permit indicia or at bulk rates must be made at times and places designated by the postmaster. These will generally be limited so as to insure proper acceptance and verification of these mailings.

* * * * *

152.8 Disposal of Mail on Request By Mailer

.81 Requests

a. Mailers who desire to withdraw mailings of 200 pieces or more, before delivery, may request the Postal Service to intercept their mail and dispose of it rather than deliver the mail.

b. A written and signed request must be submitted to the postmaster at the office of mailing. This request must contain an adequate description of the mail, for identification purposes including dimensions, colors, weight, identifying markings, number of pieces, postage, and samples, if available. The request should also include the destination ZIP Codes of the mail and carrier routes if known.

c. Customers may notify postmasters of destination post offices, in writing, prior to the deposit of mail, that time dated mail will be received, and request the postmaster to dispose of it if received after the scheduled date. In addition to the information indicated in *b.* above, the customer must include the scheduled delivery date after which the customer does not want the mail delivered.

d. The post office can only dispose of the mail if *received* after the scheduled date. The post office must then notify the customer of the disposal.

.82 Additional Expenses. All additional expenses incurred in disposal of the mail, including long distance telephone calls, must be paid by the mailer.

.83 Postage. Disposal of mail on request by the mailer creates no obligation of the Postal Service to refund postage. See 147.21 for conditions that justify postage refunds.

.84 Disposal Action

a. Proper requests for disposal of mail will be acted on if they are received at the destination post office delivery unit before the mail is processed by the carriers.

b. Every practical effort will be made to accommodate a request for disposal of mail. However, the Postal Service does not guarantee that a mailing can be completely gathered during processing, thereby, stopping delivery of all pieces in the mailing.

c. The postmaster or designated supervisor will verify mail matter to be disposed and ensure that only mail described in the mailer's request is destroyed.

153 Conditions of Delivery

* * * * *

153.3 Jointly Addressed Mail

.31 Delivery of Jointly Addressed Mail. Where mail is jointly addressed, for example, *Mr. and Mrs. John Doe, John and Jane Doe,* neither party is entitled to control delivery of such mail over the objection of the other. Jointly

addressed mail is delivered as addressed by the sender so long as one of the parties can receive it there, except that U.S. Government checks will be returned if either party is deceased.

.32 Delivery of Mail Addressed to Husbands or Wives. Neither party may control delivery of mail addressed to the other. In the absence of specific delivery instructions the mail will be delivered as addressed by the sender.

154 General Delivery

155 City Delivery

156 Rural Services

* * * * *

156.4 Payment of Postage

.41 Acceptance of Mail

.411 A rural carrier will accept any mailable matter, provided postage is fully prepaid or money equal to the required postage is furnished, unless the purpose of handing mail to the carrier for deposit into one office is to "boycott" another office or deprive it of legitimate revenue. During December customers are required to affix stamps to all greeting cards and letter mail.

.412 When a rural carrier finds unstamped mail in a customer's box and the required amount of money for postage, he will normally collect the mail and money and affix the necessary postage. The carrier has stamps, stamped envelopes, and postal cards for sale. For convenience and safety, customers who leave mail and money in rural boxes to be collected by the carrier should either wrap the money, place it in a coin-holding receptacle, or attach it to the mail by means of a clip or other fastener. Money left in rural boxes is left at the risk of the customer.

.42 Postage Uncertain. When mail is given to a rural carrier for mailing and he is unable to determine the postage, he will accept from the sender an amount sufficient to insure full payment of postage. On the next trip he will return to the sender any excess money.

.43 Insufficient Postage. When mailable matter is deposited in a box and the required postage has not been paid nor sufficient money left to purchase stamps, the rural carrier will, when the identity of the sender is known, place in the box a notice that such matter cannot be dispatched until the necessary postage is paid. If the identity of the sender is unknown, the matter will be taken to the post office and treated as unpaid mail.

.44 Mailable Matter Not Bearing Postage Found In or On Rural Mail Boxes. When mailable matter, not bearing postage, is found in, placed upon, attached to, supported by, or hung from rural mailboxes, the procedures in 146.2 must be followed.

157 Highway Contract Service

158 [Reserved]

159 Undeliverable Mail

159.1 Mail Undeliverable-As-Addressed

.11 General Provisions. Nondelivery of mail can result from any one of the following general reasons:

a. Mail does not bear postage.

b. Incomplete, illegible, or incorrect address.

c. Addressee not at address; moved, or deceased.

d. Mail unclaimed.

e. Mail refused by the addressee at time of delivery.

f. Mail refused by the addressee after delivery when refusal is authorized under 153.11c.

.12 Specific Provisions. The specific provisions governing undeliverable mail of each class are contained in the appropriate chapters of this manual dealing with each class of mail.

.13 Undeliverable Due to Postal Service Adjustments

.131 Types of Changes

a. Rural route adjustments.

b. Conversion from rural to city delivery service.

c. Renumbering of houses.

d. Renaming of streets.

e. Consolidation of routes.

f. Consolidation of post offices.

g. Readjustment of delivery districts.

.132 Notice of Change. Customers should notify their correspondents of their correct address, including ZIP Code number. Form 3576, *Change of Address Notice to Correspondents, Businesses, and Publishers,* is available for this purpose. In addition, where practical, postmasters will attempt to notify publishers and other mailers who regularly send bulk mailings into the area. No charge will be made to these mailers for the notices, or for corrections to galley lists of address changes due to Postal Service adjustments.

.133 Disposition of Mail. Mail which is undeliverable due to Postal Service adjustments will be redirected and, if necessary, forwarded to the destination without an additional postage charge, for one year from the end of the month in which the postal change occurs. *Exception:* Simplified Address (boxholder), mail addressed to Rural Route Boxholder, Highway Contract Route boxholder, or Post Office Boxholder, will only be redirected and forwarded free of charge until June 30 after the change in service or, until 90 days after the change in service, whichever is later.

.14 Endorsements. Undeliverable-as-addressed mail will be endorsed by the Postal Service with the reason for nondelivery. See Exhibit 159.14.

.15 Treatment of Undeliverable-As-Addressed Mail

.151 Mail which is undeliverable-as-addressed may be forwarded, returned to the sender, or treated as dead mail, depending on the treatment authorized for that particular class of mail. A summary of the procedures for handling undeliverable-as-addressed mail is presented in Exhibit 159.151. More detailed provisions are found in the chapters covering each class.

Endorsement	Reason for nondelivery
1. No such office in State	Addressed to a nonexistent post office.
2. No such street	Addressed to a nonexistent street and the correct street is not known.
3. No such number	Addressed to a nonexistent number and the correct number is not known.
4. Insufficient address	Mail from another post office fails to bear a number, street, box number, route number, or geographical section of the city or city and State is omitted and the correct address is not known.
5. Returned for better address	Mail of local origin is incompletely addressed for distribution or delivery.
6. Illegible	Address cannot be read.
7. Not deliverable as addressed—unable to forward	Mail is undeliverable at address given; no Change of Address Order on file; forwarding order has expired; forwarding postage not guaranteed by sender or addressee; or, mail bears sender's instructions *DO NOT FORWARD.*
8. Outside delivery limits	Address to a location outside the limits of delivery of the post office of address (see 155.5). Mail for Out-of-Bounds customers must be retained in general delivery for the prescribed retention period unless addressee has filed an order.
9. No mail receptable	Addressee has failed to provide a receptacle for the receipt of mail.
10. Returned for postage	Mail has no postage and there are no indications that the postage has fallen off.
11. Moved, left no address	Addressee has moved and has not filed a change of address order.
12. Temporarily away	Addressee is temporarily away and retention period for holding mail has expired.
13. Addressee unknown	Addressee is not known at the place of address.
14. Refused	Addressee has refused to accept mail or pay postage charges thereon.
15. Vacant	House, apartment, office or building is not occupied. Used only on mail addressed *Occupant.*
16. Box closed—no order	Post office box has been closed for nonpayment of rent.
17. Return to sender. Order issued against addressee for violation of False Representation Law.	Mail is returned to sender under a false representation order.
18. Unclaimed	Addressee abandons or fails to call for mail.
19. Deceased	Used only when it is known that the addressee is deceased and the mail is not properly deliverable to another person. This endorsement must be made personally by the delivering employee and under no circumstances may it be rubber-stamped. Mail addressed *in care of* another will be marked to indicate which person is deceased.
20. Lottery mail. Mail to this address returned by order of Postmaster General.	Mail is returned to sender under a lottery order.
21. In dispute	Mail is returned to sender by order of the General Counsel when it cannot be determined which of disputing parties has better right to the mail.

Exhibit 159.14—*Endorsement for Mail Undeliverable-As-Addressed*

BILLING CODE 7710-12-M

FORWARDING							RETURN						
First Class up to 12 ozs. incl. Postal and postcards.	First Class Zone Rated (Priority) (1st over 12 ozs.)	Second Class	Controlled Circulation	Third Class	Fourth Class	APPLICABLE RATES: a. First Class Zone Rate between forwarding and destination PO. b. Transient Rate. c. 3rd or 4th Rate, as applicable. d. 3rd single piece. e. Applicable 4th. f. Postcard Rate or Service Fee, as indicated.	All 1st (including Zone Rated)	Postal and postcards	Second Class	Controlled Circulation	Third Class up to 2 ozs. incl.	Third Class over 2 ozs.	Fourth Class
	a.	b.	c.	d.	e.	← RATES →		f.	b.	c.	d.		e.
A	D	FG		J		NO MARKINGS	B	L	G		O		
		FH				RETURN POSTAGE GUARANTEED		M	H		M		
				IE		FORWARDING & RETURN POSTAGE GUARANTEED					ME		
AC	DC			ICE		ADDRESS CORRECTION REQUESTED FORWARDING & RETURN POSTAGE GUARANTEED	B	N			N	K	
				JC		ADDRESS CORRECTION REQUESTED RETURN POSTAGE GUARANTEED	&						
		FG				ADDRESS CORRECTION REQUESTED OR OPTIONAL WORDING RETURN REQUESTED	C		G			P	

BILLING CODE 7710-12-C

KEY

A—Forward free.
B—Return free endorsed with reason for nondelivery.
C—Send address correction to mailer, collect address correction fee.
D—Transfer locally free, forward out of town at rate "A".
E—Sender must pay Forwarding & Return Postage if addressee refuses mail.
F—For 3-month Period: Transfer locally free, and forward out of town postage due if addressee guarantees forwarding postage. Furnish Form 3578 to addressee. After 3 months, or if not forwardable originally, apply G, H, below as appropriate.
G—Send address correction together with old address, collect address Correction fee.
H—Return complete copy with address correction attached. Collect "b" or "c" rate plus address correction fee.
I—Transfer locally free, forward out of town at applicable rate.
J—Transfer all fourth-class locally free. Transfer third-class locally free if it has obvious value (159.23), if endorsed *Return Postage Guaranteed* or if addressee has guaranteed forwarding postage. Forward third- and fourth-class out of town only if addressee has guaranteed forwarding postage.
K—Return at applicable rate plus fee for address correction attached.
L—No return—treat as waste.
M—Return at applicable rate, marked NOT DELIVERABLE AS ADDRESSED—UNABLE TO FORWARD only.
N—Return endorsed with reason for nondelivery, collect address correction fee.
O—If of obvious value, return at applicable rate—otherwise treat as waste.
P—If of obvious value, return at applicable rate plus fee for address correction—otherwise send address correction and collect fee.

Exhibit 159.151. Treatment of Undeliverable-As-Addressed Mail

.152 Official mail will be treated the same as mail of the general public except that no postage due will be rated or collected by post offices on delivery of mail or address correction notices.

159.2 Forwarding

.21 Change of Address Order

.211 Forwarding Instructions. Customers should advise their local post office when they are moving. This is done by filing Form 3575, *Change of Address Order*, which is available at any post office or from any carrier. A written and signed order or a telegram sent by the customer, his agent, or person in whose care mail will be addressed is acceptable. Old and new addresses should be furnished. A change of address may not be filed with the Postal Service for mail bearing an employee's name addressed to the place of employment either during or after the termination of the employment relationship. Such mail is delivered in accordance with 153.5. A former employee may leave a forwarding address with the former employer for the purpose of having mail redirected to the former employee under the provisions of 159.226.

.212 Pledge to Pay Forwarding Postage. *The order to forward mail constitutes the pledge of the addressee to pay forwarding postage.* When an addressee who has pledged to pay forwarding postage refuses to pay the postage due, the postmaster will send Form 3546, *Notice to Change Forwarding Order*, to the postmaster at the old address requesting him to discontinue forwarding mail of the class refused.

.213 Time Limit of Change of Address Order

a. Time limit Specified by Addressee (may not exceed 1 year). State beginning and ending dates in the change of address order. The original order should be canceled when the addressee returns to his old address or moves to another permanent address within the specified period.

b. Time Limit Not Specified by Addressee. Records of permanent change of address orders, other than those subject to 159.213d, are held one year for forwarding purposes from the end of the month in which the change becomes effective. *Exception:* Address changes to a post office box at the same post office, as indicated on Form 1093, *Application for Post Office Box or Caller Number*, must be honored indefinitely. The order is not renewable. Mail may continue to be forwarded beyond the 1-year period if the new address is known to the forwarding employee.

c. Retention of Change of Address Orders. All post offices shall retain change of address orders for a period of one year from the end of the month in which the change becomes effective for administrative purposes, providing mailing list service (see 945) and releasing address change information to the public under provisions of the Freedom of Information Act (see 352 of the Administrative Support Manual).

d. Change from General Delivery at City Delivery Office. A record of change of address orders to permanent local address without time limit will be kept 6 months. A record of change of address orders to other than permanent local address without time limit will be kept 30 days.

.22 Forwardable Mail

.221 Classes. The following classes of mail will be forwarded:

a. First-Class (including zone rated [priority]) Mail.

b. Official mail (described in 137) that is sent as First-Class Mail.

c. Second-, third- and fourth-class mail when specifically requested by the order.

d. All third- and fourth-class mail for which the sender has guaranteed to pay the forwarding postage (see 159.231).

.222 Registered, Certified, Insured, and COD Mail. *A Change of Address Order* for ordinary mail will cover registered, certified, insured, and COD mail unless the sender has given other instructions or unless the addressee moved outside the United States. The sender's instructions should be written or printed on the envelope or wrapper. Examples: *Do not forward; If not accepted within———days return to sender. Exceptions:*

a. COD mail will not be forwarded to the Canal Zone nor to overseas military post offices.

b. Domestic registered articles mailed outside the United States and addressed for delivery in the United States will not be forwarded to the Canal Zone if the postage indicates the articles were valued at more than $1,000. Articles mailed in the Canal Zone addressed for delivery in the United States will not be forwarded to any place outside the United States if there is reason to believe the value exceeds $1,000.

c. Insured and COD parcels that have mailers instructions to abandon or to sell perishable items, written or printed on the envelope or wrapper, will be treated according to the instructions. *Examples:*

Do not forward or return. If not accepted within ———days, treat as abandoned. Notify mailer of final disposition.

Do not forward or return. If undelivered after———days, sell contents to highest bidder and remit proceeds, less commission, to mailer.

Do not forward or return. If undeliverable after———days, destroy. Notify mailer of final disposition.

A commission of 10 percent, but not less than 25 cents, is retained by the Postal Service from the amount for which perishable items are sold.

d. COD mail may have written or printed on it a request that it be forwarded to a new addressee. The name and address of the new addressee must be shown in a bordered space with instructions that the mail be delivered either with or without the collection of COD charges.

.223 Endorsements Not to Forward. Mail bearing the following address forms or endorsements will not be forwarded:

a. Mail addressed to *Occupant or Postal Customer.*

b. Mail bearing specific instructions of the sender *DO NOT FORWARD.*

.224 Change in Post Office Service.

a. Addressed to a Discontinued Post Office. All first-, second-, and fourth-class mail and all third-class mail of obvious value addressed to a discontinued post office may be forwarded to any other post office designated by the addressee without additional charge when the office to which such mail is ordered sent by the Postal Service is not convenient for the addressee.

b. Forwarded Due To Change in Rural Delivery Service. Customers of any office who, on account of the establishment of or a change in rural delivery service, receive their mail from the rural carrier of another office may have their first-, second-, and fourth-class mail and third-class mail of obvious value sent to the latter office and delivered by rural carrier without a new prepayment of postage, provided they file a written request with the postmaster at the former office.

c. Addressed to Boxholder. Mail addressed to post office, rural route, or highway contract route boxholder will be delivered to those customers residing in the affected area until June 30 following establishment or conversion to city delivery service or for a period of 90 days, whichever is longer.

.225 Address Changes of Persons in U.S. Service. All first-, second-, and fourth-class mail and all third-class mail of obvious value addressed to persons in the United States service (civil and military) serving at any place where the United States mail service operates, whose change of address is caused by official orders, will be forwarded until it reaches the addressee. No additional postage will be charged. Second- and fourth-class mail, third-class mail of obvious value, and First-Class zone rated (priority) Mail so forwarded are endorsed by the forwarding office *Change of Address Due to Official Orders.* This provision for free forwarding from one post office to another applies to mail for the members of the household whose change of address is caused by official orders to persons in the United States service. (See 122.814 and 122.824 concerning dependents residing with military personnel.) *Exception:* Second-class mail will not be forwarded between the U.S. and overseas APO addresses by military authorities. Copies of publications addressed to an APO for military personnel transfer to overseas assignments will be endorsed by military personnel *Forwarding Prohibited, Addressee Assigned Overseas* and returned to the post office for disposition. Copies of publications addressed to military personnel at their APO addresses who have been transferred to the U.S. will be endorsed by military personnel *Forwarding Prohibited, Addressee Returned to the U.S.* and returned to the military post office for disposition. Second-class mail having FPO addresses may be forwarded to or from the U.S. and overseas for a period not to exceed 60 days when requested by individual addressees.

.226 Reforwarding. The address (but not the name) may be changed and the mail reforwarded as many times as necessary to reach the addressee. Each time First-Class zone rated (priority) Mail, second- or fourth-class mail, or third-class mail of obvious value is reforwarded, it is charged additional postage at the appropriate rate.

.23 Obvious Value Mail

.231 Identified As to Obvious Value. The sender of third- and fourth-class mail may identify pieces which are considered to be of obvious value and assure their return by using the *Return Postage Guaranteed* service. The sender may assure forwarding or return of the pieces by using the *Forwarding and Return Postage Guaranteed* service.

.232 Unidentified As to Obvious Value. When an undeliverable piece does not bear the sender's guarantee to pay forwarding or return postage, its value will be appraised before it is disposed of. Packages of merchandise or personal property such as photographs, jewelry, or clothing are examples of matter having obvious value. Miscellaneous printed matter such as circulars and articles unsolicited by the addressee such as samples of merchandise are examples of matter not of obvious value.

.233 Disposition. When a piece not so endorsed is determined to be of obvious value, it will not be disposed of as waste, or sent to dead letter or dead parcel branches if it can be forwarded to the addressee or returned to the sender. If the addressee has guaranteed to pay forwarding postage for matter of obvious value, the piece will be forwarded. If the piece cannot be forwarded, it will be returned to the sender at the applicable postage rates.

.24 Postage for Forwarding

.241 Change in Local Address. If a change is made to an address served by the same post office, all First-, all second-, and fourth-class mail, and all third-class mail of obvious value will be delivered as directed. Additional postage will not be required. When the change of address is to a post office box at the same post office, all mail will be transferred to the box in accordance with instructions shown on Form 1093.

.242 Change to Another Post Office. Mail forwarded to another post office is subject to additional postage as follows, to be computed the same as if the piece were originally mailed at the office from which it is forwarded:

a. First-Class Mail weighing not more than 12 ounces, including postal and post cards, is forwarded without charge when postage has been fully prepaid by the sender. No additional charge is made for forwarding First-Class Mail weighing not more than 12 ounces that is not fully prepaid, but any amount shortpaid at the time of original mailing will be collected on delivery.

b. Second-Class Publications are subject to additional postage for forwarding at the second-class transient rate computed on each individually addressed copy or package of unaddressed copies.

c. Controlled Circulation Publications are subject to additional postage for forwarding at the single-piece third- or fourth-class rate according to weight.

d. Third-Class Mail is subject to collection of additional postage for forwarding at the applicable rate of postage.

e. Fourth-Class Mail is subject to the collection of additional postage for forwarding at the applicable rate of postage.

f. First-Class Zone Rated (Priority) Mail is forwarded by air and additional postage between the forwarding and the delivery office will be collected on delivery at the rates in Exhibit 310.

g. Registered, Certified, Insured, COD, and Special Handling Mail is forwarded without the payment of additional fees, but the ordinary forwarding postage charges, if any, must be paid. Such mail will not be forwarded to a foreign country. See 915.6 for forwarding special delivery mail.

.25 Directory Service

.251 Availability. Directory service is not generally available, but at carrier

offices where a directory is available, directory service is given to registered, certified, insured, COD, special delivery and special handling mail; to perishable matter and parcels of obvious value; and to international mail, except circulars. Incorrectly or incompletely addressed mail from overseas Armed Forces is given directory service and is not returned to the sender until every effort is made to deliver it.

.252 Mail Entitled to Directory Service. Directory service will be provided at letter carrier offices for the following types of mail which cannot be delivered due to insufficient address or which fail of delivery at the address given. A city or telephone directory will be used. The Postal Service will not compile a directory of any kind. Those types of mail are:

a. Certified.

b. COD

c. Foreign mail, except foreign circulars. (Note: Foreign mail bearing first-class postage, received in quantities, and having the general characteristics of circular mail, must not be given directory service.)

d. Insured.

e. Mail from overseas Armed Forces. Do not return this mail to sender until every possible effort has been made to deliver it.

f. Parcels of obvious value.

g. Perishable matter.

h. Registered.

i. Special delivery.

j. Special handling.

k. Official Postal Service mail.

l. Express Mail Next Day Service (Post Office to Addressee only).

159.3 Address Correction Service and Return

.31 Address Correction Service

.311 Availability. If mail is undeliverable-as-addressed, the mailer may obtain the correct address of the addressee or the reason for nondelivery if the correct address is not known to the Postal Service by requesting address correction service. Address correction service is provided automatically for second-class and controlled circulation publications. The service is not available for first-, third-, or fourth-class mail addressed for delivery to the addressee by military personnel at any military installation including overseas APO's and FPO's. Address correction service is available alone or in combination with the forwarding and return services in 159.2 and 159.33.

.312 Fee. The fee for address correction service is 25 cents for each address correction or notification of reason for nondelivery.

.313 Endorsement. To receive address correction service on first-, third-, and fourth-class mail, the endorsement *Address Correction Requested* must be shown on the piece. The particular provisons governing address correction for each class of mail are contained in the appropriate chapters of this manual dealing with each class of mail.

.32 Registred and COD Mail

.321 Registered Mail. When registered mail is undeliverable-as-addressed and cannot be forwarded, a notice is sent to the mailer on Form 3858, *Notice of Undeliverable or Abandoned Mail,* showing the reason. By completing the form and returning it immediately in an envelope bearing first-class postage, the mailer may tell the postmaster what to do with the mail. Mail will be returned to the mailer if there is no response. The postage charge, if any, for returning the mail (but not registration or COD fees), will be collected from the mailer. *Exception:* When registered mail is addressed to a person who has moved and left no forwarding address, Form 3858 will not be sent, and the mail will be returned immediately to the mailer.

.322 COD Mail. When, and only when, the mailer specifically so requests, Form 3849–D, *Notice to Sender of Undelivered COD Mail,* will be sent to the mailer in accordance with 914.173. The mailer may then designate a new addressee or alter the amount of COD charges by submitting Form 3818, *Authorization to Change COD Charges or Addressee.* The article will be returned to the mailer at the end of the holding period if no response is received. The postage charge, if any, for returning the mail (but not registration or COD fees) will be collected from the mailer. *Exception:* When COD mail is addressed to a person who has moved and left no forwarding address, Form 3849–D will not be sent, and the mail will be returned immediately to the mailer.

.33 Return

.331 Availability of Return Service. Undeliverable-as-addressed Express Mail and First-Class Mail (except when mailed at the card rate), which cannot be forwarded, is returned to the sender at no additional charge. Mail of other classes may be returned to the sender if it bears the endorsement *Return Postage Guaranteed.* This service is available alone or in combination with forwarding and address correction services. The particular provisions governing return for each class of mail are contained in the appropriate chapters of this manual dealing with each class of mail.

.332 Holding Period for Ordinary Mail. Mail returnable under the provisions in chapters 3 through 7 is handled as follows:

a. Returned immediately if refused by addressee.

b. Returned immediately if undeliverable when specifically addressed to a street, building, rural or highway contract route, or post office box; except that when a customer moves without leaving a change of address, the mail will be held for 10 days awaiting a forwarding order. (Exception: See 153.143.) If no order is received in that time, the mail will be handled as undeliverable. However, this does not preclude compliance with sender's request in accordance with 122.32.

c. Returned immediately, if undeliverable, when incompletely, illegibly, or incorrectly addressed and addressee is unknown.

d. Retained in general delivery not to exceed 30 days, at request of sender, if addressed in manner to indicate addressee is expected to call for mail, or if addressee normally calls there for mail.

e. Retained as follows when not specifically addressed or when sender does not specify a retention period:

(*1*) Five days if for delivery by village, rural, or highway contract route carrier.

(*2*) Ten days if intended for general delivery service at an office having city carrier service, except that the mail may be held up to 30 days if the addressee has given notice to the postmaster that he will be delayed in arrival.

(*3*) Fifteen days if intended for general delivery service at an office not having city carrier service.

f. Perishable items not marked to abandon that cannot be delivered before spoiling or day-old poultry that cannot be delivered within 60 hours after hatching are returned immediately, provided return to sender can be made prior to spoilage or within the 60 hour period.

g. Mail addressed and deliverable to a post office box, except registered, certified, insured, COD, and perishable, will not be returned until box is declared vacant.

.333 Holding Period for Registered, Insured, COD, and Certified Mail. Registered, insured, COD, and certified mail will be handled as follows:

a. Undelivered registered, insured, COD, and certified mail is retained for not less than 3 days, nor more than the periods specified in b, c, and d.

b. Registered mail is held up to 60 days if the sender so requests by endorsement on the mail. If the sender names no specific period, the mail will

be held 10 days before return.
Exception: If the postmaster believes he will be able to make delivery if the mail is held longer than 10 days, it may be held up to 60 days if written permission is obtained from the sender.

c. Insured and certified mail is held a maximum of 15 days. It is held a lesser number of days if the sender so specifies.

d. COD mail is held a maximum of 30 days. It is held a lesser number of days if the sender so specifies.

.334 Return of Registered, Numbered Insured, and Certified Mail. If a return receipt is attached to registered, numbered insured, or certified mail which is to be returned, the reason for non-delivery will be indicated on the return receipt, which will be attached to the article and returned to the mailer. Registered mail is returned through the registered mail system.

.335 Holding Period for Special Delivery and Special Handling Mail. Special delivery and special handling articles are held for the period specified in 159.332 or 159.333, except that requests for immediate return of special delivery mail will be honored.

159.4 Disposition of Articles Found Loose in the Mail.

.41 Identified Articles. Every reasonable effort will be made to match articles found loose in the mail with the envelope or wrapper from which they were lost. If the mailer or addressee can be identified, the articles will be returned or forwarded with postage charged as follows:

a. Except as indicated in 159.41b, c, or d, matter which has become loose or undeliverable due to damage during handling, and which is subsequently identified and returned or forwarded to the mailer or addressee, will be assumed to have been mailed with postage prepaid and will be returned or forwarded to the next delivery point without any additional postage charges. Any subsequent forwarding or return, will be subject to postage charges at the applicable rate.

b. If the article contains $10 or more in money or negotiable or intangible property susceptible of being converted into cash, the item will be registered and the minimum registry fee charged as postage-due.

c. If it is evident that postage has not been prepaid, loose or undeliverable matter will be rated for collection of postage on delivery at the applicable rate.

d. Items such as wallets, bank deposits, or other nonmail matter, found in collection boxes or other points within the jurisdiction of the Postal Service, will be returned at the applicable single-piece third- or fourth-class rates in 610 or 710.

.42 Unidentified Articles. Unidentified articles that have no value will be disposed of as waste. Those of value will be treated as dead mail. Forms, brochures, pamphlets, merchandise coupons, and similar matter which have become soiled, crumpled, or mutilated, must be disposed of as waste, in accordance with 159.522b.

.43 Merchandise Bearing a Controlled Name. Loose merchandise bearing an exclusively controlled trade name may not be released for delivery or return unless there is acceptable evidence, as prescribed in 159.44, that the firm to whom the merchandise is to be delivered is the mailer or addressee. The fact that an item bears an exclusively controlled trade name does not, by itself, establish a firm's right as the mailer or addressee.

.44 Return of Merchandise. Postmasters and bulk mail center managers must return merchandise to the nearest retail store, mail order store, or distribution center of a firm if ALL of the following conditions exist AND the firm does not object. Questions regarding return of merchandise under this section should be addressed to the Office of Mail Classification, USPS Headquarters, Washington, D.C. 20260. These conditions are:

a. The article must appear to be new.

b. Each article, or bundle of articles, must have an invoice, picking ticket, or other detachable identification on it. The identification must clearly show the following information:

(*1*) The name of the firm.

(*2*) A catalog, stock number, or other indication that the article was taken from the firm's stock.

(*3*) An order or invoice number, or other indication that the article was mailed in connection with a customer's order.

159.5 Dead Mail

.51 Definition

.511 Dead mail is matter deposited in the mail which is or becomes undeliverable and which cannot be returned to the sender from the last office of address. Some reasons that mail cannot be returned to the sender include:

a. The material is nonmailable;

b. The sender is unknown; or

c. The classification of the mailing piece does not entitle it to return service.

.512 Mail is declared dead at the end of the holding periods specified in 159.332, 159.333 and 159.335. Certain types of dead mail are disposed of locally; others, because of their classification, are sent to dead letter or dead parcel branches.

.52 Treatment at Local Postal Facility

.521 Opening and Examination. With the exception of printed matter having, on its face, no obvious value (see 159.23), third- and fourth-class undeliverable mail, which cannot be returned because of an incorrect, incomplete, illegible or missing return address will be opened and examined to identify the sender or addressee. This includes matter mailed under 913.122 (insured first-class parcels containing third- or fourth-class enclosures). All Express Mail and First-Class Mail, bearing no return address or an identical return and delivery address, is sent to a dead letter or dead parcel branch for opening.

.522 Disposition of Undeliverable Mail. Mail undeliverable after examination, where applicable under 159.521, is disposed of as follows:

a. Postal and post cards or samples of merchandise are destroyed or sold immediatley.

b. Printed matter, including circulars, greeting cards, newspapers, magazines, and other periodicial publications, obviously without value, is disposed of as waste paper without examination of contents. This mail will not be torn or mutilated before being consigned to the general waste, except when necessary to prevent improper use. Such matter as redemption coupons and uncanceled postage stamps must be burned or mutilated to prevent improper use. Magazines shall not be separated from the general waste unless their separate bulk sale by contract as waste would result in a material advantage to the Postal Service by reason of the high quality of the paper. Under no circumstances may magazines or other periodical publications be sold at a per copy rate or at auction by the post office. Contracts negotiated for the disposal of waste should contain a provision prohibiting resale by the contractor of copies of magazines or other periodical publications to the public for reading purposes.

c. Domestic ordinary, insured, or COD articles bearing sender's instructions to abandon are disposed of immediately after expiration of the periods stated in 159.3

d. Third-class mail of no obvious value (see 690) and without sender's request for return is disposed of as waste.

e. Insured and COD articles bearing sender's instructions to destroy will be destroyed.

f. Packages containing medicine, perishable articles, liquids, or other articles likely to injure employees, or damage equipment or other mail, or to attract pests, must be destroyed as soon as they are known to be undeliverable.

g. Letters from Canada or Mexico with return addresses are returned to the postmaster at the post office of origin.

h. Mail addressed to a deceased person (see 153).

i. Unclaimed franked mail from a Member of Congress, including that addressed under provisions of 122.442, and unclaimed official mail, including official reports and bulletins sent by state agricultural colleges and experiment stations, is returned to the postmaster at the office of origin if it is known. If office of origin is not known, the mail is sent to the post office at Washington, D.C. Undeliverable mail bearing return address of the White House, the Senate, or the House of Representatives, with or without postage stamps, is returned to the post office at Washington, D.C.

j. Santa Claus letters, with postage fully prepaid (or local unpaid or partly paid), with no identification of person for whom they are intended, are sent to institutions or persons who may request them to use for exclusively philanthropic purposes. If there is no voluntary request, they are sent to the dead mail office.

k. An undeliverable letter bearing the return address of a hotel, motel, school, college, or other public institution printed on the envelope as an advertisement is sent to a dead letter branch for disposition unless the return address also includes the name or title of an individual or a printed or written request for return.

l. Undeliverable and nonreturnable mail containing firearms is handled in accordance with 159.555.

m. All third- and fourth-class mail having obvious value (see 159.23), which cannot be forwarded or returned, and all Express Mail, and First-Class Mail, is sent to a dead letter branch or dead parcel branch for disposition.

n. Coins will be stripped from undeliverable circulars and their value accounted for as *Miscellaneous Revenue.*

o. Mail matter, which is disposed of as waste, remains the property of the Postal Service until it has been physically removed from postal premises by contractors or others specifically authorized to effect such removal.

.523 Disposal of Perishable Items, Drugs, and Cosmetics. Perishable mail, drugs, and cosmetics are disposed of as follows:

a. Perishable items. Undeliverable parcels containing perishable items that cannot be forwarded or returned before spoiling, and parcels of day-old poultry that cannot be delivered or returned within 72 hours after hatching, if salable, are disposed of by the postmaster (through competitive bidding) to the highest bidder. The addressee and postal employees may not submit bids at sales of perishable items. The postmaster will send the proceeds of the sale, less a commission of 10 percent (but not less than 25 cents), and the appropriate money order fee to the mailer, by postal money order, with an explanation of the action taken. Perishable articles that cannot be sold by competitive bidding will be delivered to a local municipal authority for distribution to hospitals, asylums, or other charitable or reformatory institutions. If there is no such municipal authority, the articles may be delivered to any charitable institution or organization, in accordance with 159.524, 159.525, and 159.526.

b. Drugs. Packages undeliverable to either the addressee or the sender that contain drugs will be destroyed. They will not be sold, donated, or retained as dead parcel post.

c. Cosmetics. Packages undeliverable to either the addressee or the sender that contain cosmetics, such as soaps, perfumes, powders, home permanent waves, hand lotions, hand creams, after-shave lotions, and deodorant sticks or pastes, which bear no statements claiming medicinal properties, will be treated as dead parcel post. Lipsticks will be destroyed. If there is any question whether the use of a cosmetic might, as the result of deterioration or for other reason, jeopardize life or health, the article will be destroyed.

.524 Disposal to Institutions—Food. Usable food items treated as dead mail may be donated to charitable institutions, or public institutions supported in whole or in part by Federal, State, county, or municipal funds. These institutions include but are not limited to hospitals, asylums, and reformatories. The following conditions apply:

a. "Homemade" items must not be donated but must be destroyed. If any doubt exists as to whether an item is "homemade," the item must be destroyed.

b. If the local municipal welfare department will assume responsibility for distribution of usable food items to eligible institutions, this method is preferred. Otherwise, postmasters shall equitably apportion the items among eligible applicant institutions.

c. The recipient must sign a release stating that the Postal Service is relieved of all responsibility connected with the food items or their subsequent use. Releases must be retained in post office files.

d. No selection shall be made by the receiving institutions as to the type or quantity of food items to be accepted.

e. Food items must be called for as soon as possible. Postmasters may deliver these items, but only if unusual circumstances prevail.

f. Food items that cannot be disposed of by donation must be destroyed.

.525 Disposal to Institutions—Periodical Publications. On request, copies of undeliverable newspapers, magazines, and other periodical publications may be furnished to reformatory institutions, hospitals, asylums, and other similar institutions which are organized for charitable purposes or which are supported in whole or part by Federal, State, or municipal funds, under the following conditions:

a. No additional clerical time will be used in the post office over that required for disposal of the copies as waste material.

b. No selection will be made by the receiving institutions as to character, quality, or type of publications to be furnished.

c. The receiving institutions must call for the copies promptly after notification of their availability, or on a scheduled basis.

d. The receiving institutions must be informed that this privilege is entirely at the option of the Postal Service and may be curtailed or discontinued at any time without notice.

.526 Disposal to Institutions—Samples of Merchandise. Undeliverable samples of merchandise sent for advertising purposes, which do not bear the words *Return Postage Guaranteed,* will be disposed of as follows:

a. Wrappers will be removed and destroyed if that is practicable and can be accomplished without additional expense. Samples will be delivered impartially to charitable or reformatory institutions that promise their free distribution.

b. Samples not suitable for distribution indicated in .526a will be disposed of as waste, except that anything of sufficient value to warrant the expense of transportation and handling must be sent to the proper

dead parcel post branch without listing or recording.

c. Packages of foods, drugs, and cosmetics must be treated in accordance with 159.523.

.53 Matter Sent to Dead Letter and Dead Parcel Branches. Matter sent to dead letter and dead parcel branches must be handled according to the following general provisions.

a. Mail is examined and opened when necessary to find the name and address of the sender or addressee.

b. A fee of 40 cents is charged for delivery to sender or addressee of each letter and first-class parcel opened in the dead mail office.

c. If the sender or addressee cannot be identified, the following retention periods are observed:

(*1*) Letters of domestic origin with enclosures of value, 1 year.

(*2*) Other letters, none.

(3) Letters containing merchandise, and third- and fourth-class mail containing valuables (including First-Class Mail not in the form of a letter, addressed to another country), 60 days: if posted in violation of law or treaty, 6 months.

d. Dead mail that cannot be delivered to addressee or sender's destroyed or sold.

e. Uncanceled postage stamps or stamped paper, which have been used for postage, must not be removed or salvaged in any manner. Postage will be canceled before any further actions are taken.

f. The provisions for registered mail are:

(1) If the address is determined, the piece will be reregistered to the rightful owner, and charged the dead-letter fee (see 159.53b) plus the minimum registry fee.

(2) The piece will be registered when forwarded or returned.

.54 Dead Letter Branches and Service Areas

.541 Dead Letter Branches. Locations of dead letter branches are:

Atlanta, GA 30304
Boston, MA 02109
Chicago, IL 60607
Cincinnati, OH 45234
Dallas, TX 75221
Memphis, TN 38101
Minneapolis, MN 55401
New York, NY 10001
Philadelphia, PA 19104
St. Louis, MO 63155
San Francisco, CA 94101
San Juan, PR 00936
Washington, DC 20013

.542 Dead Letter Service Areas. The dead letter service areas are:

State or Territory	Dead Letter Branch
Alabama	Memphis, TN 38101
Alaska	San Francisco, CA 94101
Arizona	San Francisco, CA 94101
Arkansas	St. Louis, MO 63155
California	San Francisco, CA 94101
Colorado	San Francisco, CA 94101
Connecticut	Boston, MA 02109
Delaware	Philadelphia, PA 19104
District of Columbia	Washington, DC 20013
Florida	Atlanta, GA 30304
Georgia	Atlanta, GA 30304
Guam	San Francisco, CA 94101
Hawaii	San Francisco, CA 94101
Idaho	San Francisco, CA 94101
Illinois	Chicago, IL 60607
Indiana	Cincinnati, OH 45234
Iowa	St. Louis, MO 63155
Kansas	Wichita, KS 67202
Kentucky	Cincinnati, OH 45234
Louisiana	Dallas, TX 75221
Maine	Boston, MA 02109
Maryland	Washington, DC 20013
Massachusetts	Boston, MA 02109
Michigan (Lower Peninsula).	Chicago, IL 60607
Michigan (Northern Peninsula).	Minneapolis, MN 55401
Minnesota	Minneapolis, MN 55401
Mississippi	Memphis, TN 38101
Missouri	St. Louis, MO 63155
Montana	San Francisco, CA 94101
Nebraska	Wichita, KA 67202
Nevada	San Francisco, CA 94101
New Hampshire	Boston, MA 02109
New Jersey	Philadelphia, PA 19104
New Mexico	San Francisco, CA 94101
New York	New York, NY 10001
North Carolina	Atlanta, GA 30304
North Dakota	Minneapolis, MN 55401
Ohio	Cincinnati, OH 45234
Oklahoma	Wichita, KS 67202
Oregon	San Francisco, CA 94101
Pennsylvania	Philadelphia, PA 19104
Puerto Rico	San Juan, PR 00902
Rhode Island	Boston, MA 02109
Samoa	San Francisco, CA 94101
South Carolina	Atlanta, GA 30304
South Dakota	Minneapolis, MN 55401
Tennessee	Memphis, TN 38101
Texas	Dallas, TX 75221
Utah	San Francisco, CA 94101
Vermont	Boston, MA 02109
Virginia	Washington, DC 20013
Virgin Islands	San Juan, PR 00902
Washington	San Francisco, CA 94101
West Virginia	Washington, DC 20013
Wisconsin	Minneapolis, MN 55401
Wyoming	San Francisco, CA 94101

.543 Opening Letters in Dead Letter Branches. Dead letters are opened at dead letter branches in an attempt to determine the name and address of the sender so that his property may be returned. Letters containing $10 or more, or enclosures valued at $10 or more must be registered when returned or forwarded after opening at a dead letter branch. The minimum registry fee plus the dead mail fee is charged.

.544 Dead Mail Fee. The dead mail fee of 40¢ (see 159.53b) is charged on all letters opened at a dead letter branch and returned to the sender (or forwarded to the addressee). When more than one dead letter is returned under one cover, the fee is charged on each individual piece. In addition to the dead letter fee, the minimum registry fee will be charged on letters dispatched by registered mail. *Exception:* letters orginally registered and sent to a dead letter branch for disposition are reregistered without charge. The total amount due will be shown on the face of the postage due envelope. Collection will be made at the post office of delivery by the use of postage-due stamps. Any postage due before the article became *dead* will also be collected.

.545 Disposition of Letters Deposited in Violation of Law.

a. Domestic Lottery Matter. Letters of domestic origin containing lottery tickets, chance books, etc., without remittances will be destroyed. Those containing remittances of money, money orders, checks, etc., will be returned to the sender with the orginal stubs of the ticket sold so that the sender may refund the purchase price. Chance books and tickets found in these letters will be destroyed.

b. Foreign Lottery Matter. Mail of foreign origin containing lottery matter will be disposed of in accordance with the following: (1) Where the sender can be identified as the respondent in an outstanding *foreign lottery order* (see revised Publication 43, *Foreign False Representation and Lottery Mail Orders,* and weekly Postal bulletins), the mail must be disposed of as provided by 244.4 of Publication 42, *International Mail;* (2) Where the sender cannot be so identified, a sample of the mailing will be forwarded to the Consumer Protection Division, Law Department, USPS Headquarters, Washington, DC 20260, for appropriate attention pursuant to 39 U.S.C. 3005, and additional pieces of mail from the same sender will be withheld from delivery pending publication of notice in the Postal Bulletin that a *foreign lottery order* has been issued against the sender, or the receipt of other instructions from the Law Department. Upon issuance of a foreign lottery order the mail will be disposed of as indicated in (1).

c. Other Matter. In opening dead letters, any matter under seal which is prohibited in the mail by law will be destroyed if the address of the sender or addressee is not known. Other contents will be treated in the regular manner. If the address of the sender (or addressee) is found, legitimate contents will be returned to the sender (or forwarded to the addressee), and the unlawful matter destroyed.

.55 Dead Parcel Branches

.551 Establishment

a. Policy. Dead parcel branches are established at selected post offices to serve post offices and bulk mail centers (BMC's) in a designated area. There will normally be one dead parcel branch in each BMC service area, but a dead

parcel branch may serve more than one BMC service area as warranted by volume. The BMC and all post offices in a BMC service area send dead parcels to their assigned dead parcel branch. If a post office is re-assigned to another bulk mail service area, its dead parcel branch assignment will also be changed.

b. Service Areas

Bulk Mail Centers	Dead Parcel Branch
Atlanta	Atlanta, GA 30304
Chicago	Chicago, IL 60607
Cincinnati	Cincinnati, OH 45234
Dallas	Fort Worth, TX 76101
Denver	Denver, CO 80202
Des Moines	St. Paul, MN 55101
Detroit	Detroit, MI 48233
Greensboro	Greensboro, NC 27420
Jacksonville	Jacksonville, FL 32201
Kansas City	St. Louis, MO 63155
Los Angeles	Los Angeles, CA 90098
Memphis	Memphis, TN 38101
New York	New York, NY 10001
Philadelphia	Philadelphia, PA 19104
Pittsburgh	Pittsburgh, PA 15219
St. Louis	St. Louis, MO 63155
Minneapolis	St. Paul, MN 55101
San Francisco	San Francisco, CA 94101
Seattle	Seattle, WA 93109
Springfield	Boston, MA 02109
Washington	Washington, DC 20013

.552 **Opening Parcels.** Dead parcels are opened at dead parcel post branches in an attempt to determine name and address of sender, so that property may be returned. *Exception:* If parcels are endorsed to show that they are the property of the U.S. Postal Service or that the sender has refused to pay postage due on return as undelivered, the parcels will be considered as property of the U.S. Postal Service.

.553 **Treatment of Dead Parcels**

a. First-Class Parcels. First-class parcels will be treated as dead letters (see 159.54).

b. Other Parcels.

(1) Dead parcels will be returned to the sender, or to the addressee when the opening of the parcel reveals the correct name and address of the addressee and the name and address of the sender is not found, except when the parcel has become the property of the U.S. Postal Service. The parcel will be rated for collection of postage due at the zone rate from the dead parcel post branch and additional postage at the zone rate from the office of last address to the dead parcel post branch.

(2) Except for books and sound recordings (see 159.554) other parcels, including ordinary, insured, and COD, will be prepared for disposal as soon as received if sender or addressee cannot be identified.

.554 **Disposal of Books and Sound Recordings.** Books and sound recordings will be disposed of by sale except for those that may be withheld from sale for release to a publisher or distributor under the following conditions:

a. A publisher or distributor may request, in the manner set forth below, that books and sound recordings bearing a particular trade name, company name, or other organizational identification, be released to the requester, or to the requester's authorized representative. The provisions for this request are:

(1) The requester must apply in writing to the postmaster at each dead parcel branch where release of material is desired.

(2) The request must be in quadruplicate.

(3) Requesters must include a statement that they are a publisher or distributor of books or sound recordings bearing a particular trade name, company name, or other organizational identification.

(4) More than one trade name, company name, or other organizational identification may be listed in the same request.

(5) The request must specify whether the books and sound recordings are to be picked up at the dead parcel branch or whether delivery to another location is desired. If delivery to another location is desired, the address must be specified and must be one used by the requester as a return address. A requester may select only one such address for each dead parcel branch. The specified address may be changed at any time by submitting a written request to the postmaster at the dead parcel branch office.

(6) After approval, the postmaster will retain the original request and send one copy each to the requester, the Inspector-in-Charge of the Division in which the installation is located, and the General Manager, Special Services Division, Office of Mail Classification, USPS Headquarters, Washington, DC 20260.

(7) An approved request will remain in effect until canceled in writing by either the requester or the Postal Service (see 159.554j).

b. A book or sound recording will be sold at auction and will not be released to the requester if, although it bears an applicable trade name, company name, or other organizational identification, it does not appear to be new, or was involved in the settlement of a postal indemnity claim, or if it is known that the requester was not the mailer or addressee.

c. A request for release of books or sound recordings will be granted except where a written protest, or a conflicting request from another party, is presented to the postmaster at the dead parcel branch post office. Merchandise involved in such a dispute will be sold at auction in the normal course of business, unless written notice from both parties advising of settlement of the dispute is received prior to the prescribed sale deadline (see 159.554g). The postmaster at the dead parcel branch post office will notify both parties in writing when such disputes arise or are settled and of the consequences to the merchandise in such disputes.

d. Upon approval of a request under 159.554a, dead parcel branches will establish special separations or bins, for separation of books and sound recordings which bear the specified trade name, company name, or other organizational identification. Such identification must consist of a readily identifiable name and be easily read. Dead parcel branches will attempt to adhere to these special separation requests to the maximum extent practicable.

e. Except where delivery to another location is desired (see 159.554a(5) and .554h), dead parcel branches will release books and sound recordings to requesters or their authorized representatives at the dead parcel branch at a time and in a manner mutually agreeable between the requester and the postmaster, consistent with the instructions in this section (159.554). such merchandise must be picked up at least once before each auction, but may be picked up more often by mutual agreement between the postmaster and the requester.

f. When books and sound recordings are to be released at the dead parcel branch, the following procedures apply:

(1) Ten days before each dead parcel auction, or more often, if warranted by volume, the dead parcel branch will send a written notice to each requester who has specified release of such merchandise at the dead parcel branch, advising of the quantity of books and sound recordings on hand. Merchandise which is to be released at the dead parcel branch will not be listed in the sale catalog.

(2) Requesters or their representatives may pick up books and sound recordings at the dead parcel branch upon presentation of a letter from the requester authorizing the Postal Service to release such merchandise to the bearer. This letter of authorization must be executed in triplicate. Upon release of the merchandise, all copies of the letter of authorization will be receipted in bulk by the person accepting delivery. One copy will be given with the merchandise, one copy will be mailed

directly to the requester, and the original will be retained by the dead parcel branch.

g. Books and sound recordings must be picked up at the dead parcel branch before the close of the business day immediately preceding the public display of auction sale merchandise. Failure to do so will result in cancellation of a request (see 159.554j).

h. As to books and sound recordings, which are to be released at another location under 159.554a(5), dead parcel branches will make up individual packages for shipment to the other location desired by the requester, unless hampers or other types of containers would be more advantageous. The provisions for these individual packages and containers are:

(1) Individual Packages. Individual packages will be as large as possible subject to the weight and size limitations for fourth-class mail in 750. Each package will be prepared to comply with the requirements of 724.1, sent under a penalty label, and delivered at the destination as ordinary mail.

(2) Containers. Books and sound recordings from dead mail branches may be delivered in hampers, or other containers, where this means is more advantageous than making up individual packages, and adequate security against pilferage can be maintained. Postmasters at dead parcel branches and postmasters at delivery offices may coordinate suitable arrangements for containment, labling, movement, and security of such merchandise through their respective transportation management officers.

i. Failure to accept delivery of any shipment under 159.554h will result in cancellation of a request (see 159.554j).

j. When a request is canceled (see 159.554a(7), .554g, and .554i), the requester must be notified by the postmaster in writing. A canceled request may not be renewed for six months after the date of cancellation. At that time, an application must be re-submitted in writing, as if it were a new request. Copies of any cancellation notice must be sent to the General Manager, Special Services Division, Office of Mail Classification, USPS Headquarters, Washington, DC 20260. Merchandise on hand at the time of a cancellation will be included in the next auction.

.555 Disposal of Firearms and Ammunition

a. Definition. The term *firearms* means any weapon by whatever name known, which is designed to expel a projectile or projectiles by the action of an explosive, and a firearm muffler or firearm silencer, or any part or parts of such weapon.

b. Sale. Firearms, other than pistols, revolvers, short barreled rifles or short barreled shotguns, will be sold only to licensed firearms dealers. When there is an accumulation of these items, local firearms dealers will be notified of the intended sale of all items as a single lot, by sealed bid. The items will be displayed and sold to the dealer who submits the highest bid.

.556 Disposal of Other Dead Parcels. Dead parcels other than those described in 159.553, 159.554 and 159.555 are disposed of by sale at auction. Auctions will be held periodically, at least twice each year, and will be advertised to the public. Information regarding the conduct of auction sales, such as display of lots, catalogs, bidding, advance deposit accounts and other methods of payment, and delivery of goods sold, may be obtained from the manager of the dead parcel branch conducting the auction sale.

.557 Postal Employees Ineligible to Purchase. Postal employees may not purchase directly or indirectly any dead parcel post matter.

160 Philately

170 Special Cancellations

Chapter 2—Express Mail

Chapter 3

First-Class Mail

310 Rates and Fees (See Exhibit 310)

A. Single Letters (12 oz. or less):
This applies to first-class letters which do not exceed 12 ounces.
First oz or fraction of an oz.....15¢
Each additional oz. or fraction of an oz.....13¢

Not Exceeding (ounces)	Rate
1	15¢
2	28¢
3	41¢
4	54¢
5	67¢
6	80¢
7	93¢
8	$1.06
9	$1.19
10	$1.32
11	$1.45
12	$1.58

B. Cards:
Postal cards are stamped cards sold by the USPS. Post cards are sold commercially and need to have stamps added. Rates:
Postal cards:
Single.....10¢ each
Double.....10¢ each part
Post cards:
Single.....10¢ each
Double.....10¢ each part
[Reply part does not have to bear postage when originally mailed.]

C. Presorted Mail:
To mail at presort rate, the presort *annual fee of $30* must first be paid.
Rates: The applicable first-class rate, less 2¢ per piece for letters and less 1¢ per piece for cards.

D. Address Correction Service Fee:
The fee for address correction service is 25¢ per notice issued.

Exhibit 310 (p. 1)—First-Class Rates and Fees

E. Zone Rated (Priority) Mail (over 12 oz.)

	Rate					
	Local zones 1, 2, and 3	Zone 4	Zone 5	Zone 6	Zone 7	Zone 8
Weight over 12 ounces and not exceeding—pound(s):						
1.0	$1.71	$1.81	$1.83	$1.97	$2.06	$2.25
1.5	1.86	1.96	2.07	2.21	2.34	2.50
2.0	1.99	2.12	2.27	2.44	2.61	2.83
2.5	2.11	2.27	2.45	2.68	2.89	3.16
3.0	2.23	2.42	2.65	2.91	3.17	3.50
3.5	2.35	2.58	2.84	3.15	3.45	3.83
4.0	2.47	2.73	3.03	3.38	3.73	4.16
4.5	2.59	2.89	3.22	3.62	4.01	4.50
5	2.72	3.04	3.42	3.85	4.29	4.83
6	2.96	3.35	3.80	4.32	4.84	5.50
7	3.20	3.66	4.18	4.79	5.40	6.16
8	3.44	3.96	4.56	5.26	5.96	6.83
9	3.69	4.27	4.95	5.73	6.51	7.49
10	3.93	4.58	5.33	6.20	7.07	8.16
11	4.17	4.89	5.71	6.67	7.63	8.83
12	4.42	5.20	6.10	7.14	8.18	9.49
13	4.66	5.50	6.48	7.61	8.74	10.16
14	4.90	5.81	6.86	8.08	9.30	10.82
15	5.15	6.12	7.25	8.55	9.86	11.49
16	5.39	6.43	7.63	9.02	10.41	12.16
17	5.63	6.74	8.01	9.49	10.97	12.82
18	5.87	7.04	8.39	9.96	11.53	13.49
19	6.12	7.35	8.78	10.43	12.08	14.15
20	6.36	7.66	9.16	10.90	12.64	14.82
21	6.60	7.97	9.54	11.37	13.20	15.49
22	6.85	8.28	9.93	11.84	13.75	16.15
23	7.09	8.58	10.31	12.31	14.31	16.82
24	7.33	8.89	10.69	12.78	14.87	17.48

Exhibit 310 (p. 1)—First-Class Rates and Fees—Continued

	Rate					
	Local zones 1, 2, and 3	Zone 4	Zone 5	Zone 6	Zone 7	Zone 8
25	7.58	9.20	11.08	13.25	15.43	18.15
26	7.82	9.51	11.46	13.72	15.98	18.82
27	8.06	9.82	11.84	14.19	16.54	19.48
28	8.30	10.12	12.22	14.66	17.10	20.15
29	8.55	10.43	12.61	15.13	17.65	20.81
30	8.79	10.74	12.99	15.60	18.21	21.48
31	9.03	11.05	13.37	16.07	18.77	22.15
32	9.28	11.36	13.76	16.54	19.32	22.81
33	9.52	11.66	14.14	17.01	19.88	23.48
34	9.76	11.97	14.52	17.48	20.44	24.14
35	10.01	12.28	14.91	17.95	21.00	24.81
36	10.25	12.59	15.29	18.42	21.55	25.48
37	10.49	12.90	15.67	18.89	22.11	26.14
38	10.73	13.20	16.05	19.36	22.67	26.81
39	10.98	13.51	16.44	19.83	23.22	27.47
40	11.22	13.82	16.82	20.30	23.78	28.14
41	11.46	14.13	17.20	20.77	24.34	28.81
42	11.71	14.44	17.59	21.24	24.89	29.47
43	11.95	14.74	17.97	21.71	25.45	30.14
44	12.19	15.05	18.35	22.18	26.01	30.80
45	12.44	15.36	18.74	22.65	26.57	31.47
46	12.68	15.67	19.12	23.12	27.12	32.14
47	12.92	15.98	19.50	23.59	27.68	32.80
48	13.16	16.28	19.88	24.06	28.24	33.47
49	13.41	16.59	20.27	24.53	28.79	34.13
50	13.65	16.90	20.65	25.00	29.35	34.80
51	13.89	17.21	21.03	25.47	29.91	35.47
52	14.14	17.52	21.42	25.94	30.46	36.13
53	14.38	17.82	21.80	26.41	31.02	36.80
54	14.62	18.13	22.18	26.88	31.58	37.46
55	14.87	18.44	22.57	27.35	32.14	38.13
56	15.11	18.75	22.95	27.82	32.69	38.80
57	15.35	19.06	23.33	28.29	33.25	39.46
58	15.59	19.36	23.71	28.76	33.81	40.13
59	15.84	19.67	24.10	29.23	34.36	40.79
60	16.08	19.98	24.48	29.70	34.92	41.46
61	16.32	20.29	24.86	30.17	35.48	42.13
62	16.57	20.60	25.25	30.64	36.03	42.79
63	16.81	20.90	25.63	31.11	36.59	43.46
64	17.05	21.21	26.01	31.58	37.15	44.12
65	17.30	21.52	26.40	32.05	37.71	44.79
66	17.54	21.83	26.78	32.52	38.26	45.46
67	17.78	22.14	27.16	32.99	38.82	46.12
68	18.02	22.44	27.54	33.46	39.38	46.79
69	18.27	22.75	27.93	33.93	39.93	47.45
70	18.51	23.06	28.31	34.40	40.49	48.12

Exception: Parcels weighing less than 15 pounds, measuring over 84 inches but not exceeding 100 inches in length and girth combined, are chargeable with a minimum rate equal to that for a 15-pound parcel for the zone to which addressed.

Exhibit 310 (p. 2)—First-Class Rates and Fees

320 Classification

321 General Description

321.1 Matter Mailable at First-Class Rates. All mailable matter (see 123, 124) may be sent as First-Class Mail, with the exception of the material listed in 324.2. In addition, the following items may only be mailed as First-Class Mail or as Express Mail:

a. Matter in writing or typewriting. Matter wholly or partially in writing or typewriting, "except authorized additions to second-, third-, and fourth-class mail provided by 425.6, 425.7, 625, 721.2, and 723.23 and written or typewritten matter listed in 724.1 and 725.

b. Matter closed against postal inspection

(*1*) First-Class Mail is closed against postal inspection. *Note:* The Postal Service may open mail other than First-Class Mail to ascertain whether the proper rate of postage has been paid.

(*2*) Material, which is wrapped or packaged in such a way that it can not be examined easily or examined without destruction or serious damage, will be considered closed against postal inspection and will be charged the appropriate first-class rate of postage.

c. Other. Matter having the character of actual and personal correspondence.

d. Bills and statements of account

(*1*) A bill is a request for payment of a definite sum of money claimed to be owing by the addressee either to the sender or to a third party. The mere assertion of an indebtedness in a definite sum combined with a demand for payment is sufficient to make the message a bill.

(*2*) Generally, a statement of account is the assertion of the existence of a debt in a definite amount owed by the addressee either to the sender or to a third party but which does not necessarily contain a request or a demand for payment. The amount may be immediately due or may become due after a certain time or upon demand or billing at a later date.

(*3*) A bill or statement of account must present the particulars of an indebtedness with sufficient definiteness to inform the debtor of the amount he is required to pay to acquit himself of the debt. However, neither a bill nor a statement of account need state the precise amount if it contains sufficient information to enable the debtor to determine the exact amount of the claim asserted.

(*4*) A bill or statement of account does not lose that character just because the amount claimed is not in fact owing or may not be legally collectible.

321.2 Examples. Examples of material which must be mailed at first-class rates are:

a. Handwritten or typewritten matter, including identical copies prepared by automatic typewriter and manifold or carbon copies of such matter. Handwritten or typewritten matter does not include matter produced by computers. (However, computer prepared material is subject to first-class postage if it has the character of actual and personal correspondence.)

b. Autograph albums containing writing.

c. Notebooks or blank books containing written or typewritten entries or stenographic or shorthand notes.

d. Blank printed forms filled out in writing, such as notices, certificates, and checks either canceled or uncanceled.

e. Printed price lists containing written figures changing individual items.

f. Printed cards or letters bearing a written date, where the date is not the date of the card but gives information as to when something will occur or has occurred.

g. Any matter which contains the endorsement *Post Card* or *Double Post Card.*

321.3 Air Transportation Prohibitions. See 324.2 for a list of items which may not be sent as First-Class Mail because they cannot be safely carried by air.

322 Postal and Post Cards

322.1 Postal Cards. A postal card is a card supplied by the Postal Service with a postage stamp printed or impressed on it, for the transmission of messages. A double postal card consists of two attached postal cards, one of which may be detached by the receiver and returned by mail as a reply. Each card has a printed or impressed postage stamp of the first-class card rate.

322.2 Post Cards. Post cards are privately printed mailing cards for the transmission of messages. A double post card consists of two attached post cards, one of which may be detached by the receiver and returned by mail as a reply. Each card is subject to the first-class card rate. However, postage need not be paid on the reply portion until it is detached and mailed as a reply. The paper or card stock used for single and double post cards may be of any light color that does not prevent legible addresses and postmarks from being placed thereon. Brilliant colors must not be used. Single post cards and each part of double post cards must conform to the following specifications to qualify for mailing at the card rate:

a. Post cards may not be smaller than 3½ by 5 inches, nor larger than the size fixed by the Convention of the Universal Postal Union in effect (currently 4¼ by 6 inches).

b. They must be rectangular in shape, and of approximately the same form, quality, and weight as postal cards.

c. A post card must be made of an unfolded and uncreased piece of paper or card stock of approximately the quality and weight of a postal card. The thickness must be uniform and not less than 0.007 of an inch thick.

322.3 Restrictions on the Use of Double and Single Postal and Post Cards

.31 General Restrictions. The users of double and single postal and post cards must comply with the following rules:

a. Double cards must be folded before mailing. The first half must be detached when the reply half is mailed for return.

b. The reply half on a double card must be used for reply purposes only. It must not be used to convey a message to the original addressee of the double card or to send statements of account.

c. Double cards must be prepared so that the address on the reply half is on the inside when the double card is mailed.

d. Plain stickers, or seals, or a single wire stitch may be used to fasten the edges of double cards, provided they are so fixed that the inner folds of the cards can be readily examined.

e. Enclosures in double cards are prohibited.

f. Cards bearing attachments are not mailable at the rates for postal cards or post cards. Labels affixed by adhesive for the purpose of showing the address and the return address are permitted.

g. The face of the card may be divided by a vertical line, the left portion to be used for the message and the right portion for the address, postage, and postal endorsements. A space of at least 2-⅛ inches in length, measured from the right edge of the card, must be reserved for the address (top to bottom inclusive), postage, and postal endorsements.

h. If more than one-half of the face of the card is used for the message, the card must be prepared in accordance with 322.32.

i. In addition to the address, postage, and postal endorsements, accounting data and instructions to the addressee may be shown in the address portion of cards. Accounting data and instructions to the addressee in the address portion of cards must be shown on or surrounded by a shaded background, and the cards must be prepared in accordance with 322.32. The area reserved for the address of cards prepared in this manner must be unshaded and at least 2-⅛ inches long and 1 inch high. Permit imprints, meter stamps, or postal endorsements must be shown on an unshaded background.

j. Postal cards and post cards which have holes or vertical tearing guides are mailable only if the holes and tearing guides do not result in the elimination of any letters or numbers in the address and the cards are prepared in accordance with 322.32.

.32 Cards Mailed Under 322.31h, i, or j. Postal cards and post cards, not mailed as presorted First-Class Mail, which are mailed under 322.31h, i, or j, must be prepared as follows:

a. The mailings must consist of not less than 200 cards which are identical as to size and weight.

b. The addresses on the cards must include ZIP Codes.

c. Postage must be paid by permit imprints, meter stamps, or precanceled stamps.

d. The mailer must separate the cards to the finest extent possible and sack them in the manner prescribed by 663.

322.4 Cards Other Than Postal and Post Cards. Matter which is in the form of a single or double card, but which does not conform to the specifications for a single or double post card stated in 322.2 may not be mailed at the card rate. Such nonconforming matter is not subject to the rules and restrictions in 322.3; it is subject to postage at the regular single piece rate in Exhibit 310 or at the applicable third-class rate in 610 according to its classification as first-or third-class matter. It must not bear the words, *Post Card* or *Double Post Card.* See 350 for a list of physical characteristics which cause cards to be nonmailable, or subject to a surcharge.

323 Presorted First-Class Mail

Presorted First-Class Mail is mail presented in a manner that preserves the orientation, facing, and ZIP Code sequence of the pieces. The presort rates apply to each piece that is part of a group of 10 or more pieces sorted to the same 5-digit ZIP Code, or of a group of 50 or more pieces sorted to the same 3-digit ZIP Code prefix, when they are presented at one post office as part of a single mailing of not less than 500 pieces of First-Class Mail of Identical size and weight, each weighing 12 ounces or less. All pieces must be individually addressed and lower rated pieces must be sorted to the maximum extent; i.e.; all 5-digit sorts in groups of 10 or more must be exhausted before proceeding to make up all 3-digit sorts in groups of 50 or more. Full first-class postage must be paid on the residue not sorted to groups of 5- or 3-ZIP Code digits as described above. Cards subject to sortation requirements of 322.32 are eligible for the presort rate if they meet all requirements for the rate.

324 First-Class Zone Rated (Priority) Mail

324.1 Description. Zone rated (priority) mail consists of First-Class Mail weighing more than 12 ounces.

324.2 Acceptable Articles, Exceptions

.21 Air Transportation Limitations. First-Class Mail is regularly sent by air. Therefore, all First-Class Mail is subject to the limitations which apply to air transportation. Generally, all mailable matter may be transported by aircraft except:

a. Anything susceptible to damage or which may become harmful because of changes in temperature or atmospheric pressures unless protected against the effects of such changes;

b. Magnetic Material having a field strength sufficient to cause a compass deviation at a distance of 15 feet (4.6 meters) or more from any point on the package;

c. Flammable liquids and solids;

d. Radioactive matter; and

e. Matter specifically exluded from air shipment by the regulations of the Department of Transportation, 49 CFR, Parts 100–189; or the applicable restricted articles tariffs of the air carriers.

.22 Exceptions. Certain restricted articles as described in 49 CFR, Parts 100–189 and the restricted articles tariffs of the air carriers, may be accepted for air transporation if they are properly packaged. Such articles must be labeled and bear a shipper's certification in

triplicate as required by 49 CFR, or must be marked in the manner prescribed by the air transport restricted articles tariff (e.g. *ORM Group A–DRY ICE).*

324.3 Additions and Enclosures. There are no special restrictions with respect to written additions and enclosures in First-Class zone rated (priority) Mail.

330 Service Objectives

331 General

All First-Class Mail receives expeditious handling and transportation. The Postal Service has established uniform guidelines for distribution and delivery of mail. The current service objectives concerning when delivery of First-Class Mail can be expected are shown in 332. It should be noted that these are objectives which the Postal Service is striving to achieve. The Postal Service does not guarantee delivery within the specified time.

332 Specific

The following delivery objectives can be anticipated:

a. Overnight delivery can be anticipated between point of mailing and locally designated cities and SCF's for mail deposited up to and including 5:00 p.m. collection.

b. Delivery by 2nd day can be anticipated for locally designated States.

c. Delivery by 3rd day can be anticipated for remaining outlying areas.

340 Authorizations and Permits

341 Annual Presort Fee

A first-class presort mailing fee must be paid once each calendar year at each office of mailing by or for any person who mails at the first-class presort rate. Any person who engages a business concern or individual to mail for him must pay the fee. (See Exhibit 310 for fee.)

342 Other Permits Required

The presort mailing fee in Exhibit 310 is separate from the fee that must be paid for an authorization to mail under the permit imprint system (see 145). In addition, authorization must be granted, but no fee is required, for a license to mail using postage meters and meter stamps (see 144) and precanceled stamps (see 143).

350 Physical Limitations

351 Weight Limits

Each piece may not weigh more than 70 pounds. See 126 for the exception to this limit for articles addressed to certain APO's and FPO's.

352 Size Limits

352.1 Length and Girth

.11 Maximum Dimensions. The combined length and girth of a piece may not exceed 100 inches. See 126 for the exception to this limit for articles addressed to certain APO's and FPO's.

.12 Measurement (See Exhibit 352). To compute the size of a parcel:

a. Measure the longest side,

b. Measure distance around the parcel at its thickest part (girth), then

c. Add both measurements.

.13 Two or More Packages. Two or more packages may be mailed as a single parcel if they are about the same size or shape or if they are parts of one article. They must be securely wrapped or fastened together and must not, together, exceed the weight or size limit.

352.2 Shape, Ratio, and Sealing.

.21 Standards. The following minimum size standards apply to First-Class Mail:

a. All mailing pieces must be at least 0.007 of an inch thick.

b. All mailing pieces which are ¼ of an inch thick or less must be:

(1) rectangular in shape,

(2) at least 3½ inches high, and

(3) at least 5 inches long.

Note: First-class mailing pieces which do not meet these minimum size standards are prohibited from the mails.

.22 Recommendations. To insure prompt and efficient processing of First-Class Mail, it is recommended that all envelopes, cards and self-mailers:

a. Have an aspect ratio of width (height) to length between 1 to 1.3 and 1 to 2.5 inclusive. (See 353 for nonstandard mail surcharge.)

b. Be sealed or secured on all four edges so that they can be handled by machines.

BILLING CODE 7710-12-M

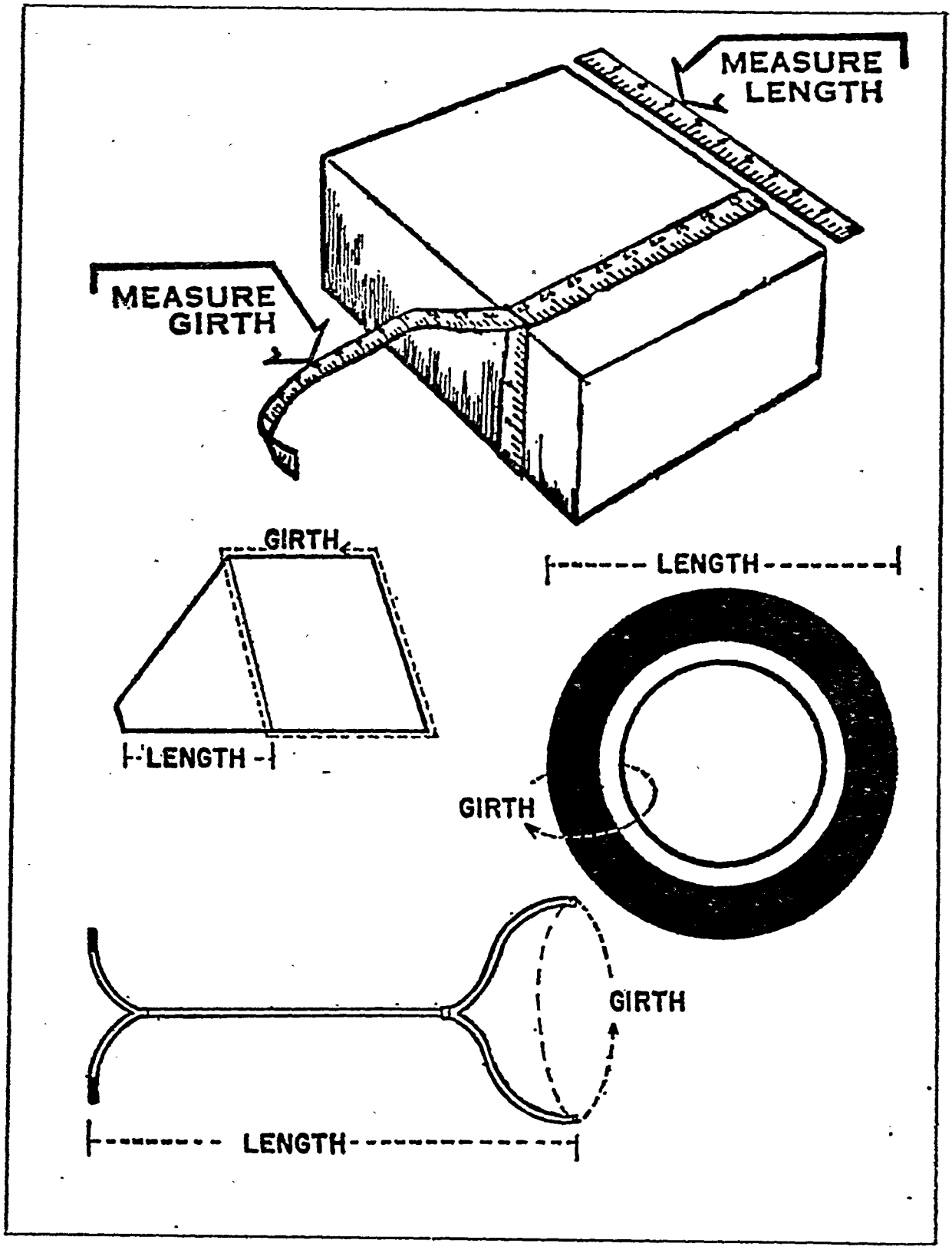

Exhibit 352—How to Measure a Parcel

BILLING CODE 7710-12-C

353 Nonstandard First-Class Mail

353.1 Size Limits. First-Class Mail weighing one ounce or less is nonstandard if it exceeds any of the following size limits:

a. Its length exceeds 11½ inches, or

b. Its height exceeds 6⅛ inches, or

c. Its thickness exceeds ¼ of an inch, or

d. Its aspect ratio (length divided by height) does not fall between 1 to 1.3 and 1 to 2.5 inclusive.

353.2 Delays. Nonstandard mail often results in delays or damage to mail because it does not lend itself to machine processing. For this reason, mailers are encouraged to avoid mailing nonstandard First-Class Mail.

353.3 Surcharge. A surcharge of 7 (seven) cents is assessed on each piece of nonstandard First-Class Mail.

360 Preparation Requirements

361 General Requirements

The general procedures for addressing are contained in 122. In addition, presort and zone rated (priority) First-Class Mail have special addressing, marking, and sorting requirements.

362 Preparation of Presort Mail

362.1 Addresses. The address on each piece must include the ZIP Code (or carrier route code if presorted directly to carriers).

362.2 Markings Required. Identifying words *PRESORTED FIRST-CLASS* must be incorporated as part of the permit imprint or be printed or rubber stamped by the mailer on each piece above the address and immediately below or to the left of the meter stamps or permit imprints. The marking may be printed by a postage meter, special slug, or ad plate. All pieces in the mailing including residual pieces not qualifying for the lower presort rate must be so marked.

362.3 Mailing Statement. Mailers who qualify for the first-class presort rate (see 323) must complete and submit one of the following mailing statements (signed by the mailer or an authorized agent) with each mailing.

a. Form 3602, *Statement of Mailing With Permit Imprints,* for mail with permit imprints. If editions of the form earlier than December 1975 are used, two forms must be used: one for those qualifying for the lower presort rate, and one for those which do not. The form for those qualifying for the lower presort rate must be marked *PRESORT RATE* across the top of the form, and should only list the items which qualify for the lower presort rate. The form for the nonqualifying pieces must be marked *Presort Residual* across the top of the form and should only list the items which do not qualify for the lower presort rate.

b. Form 3602-PC, *Statement of Mailing-Bulk Rates,* for mail bearing meter stamps. The blocks for weight of a single piece, number of pieces in a pound, and postage chargeable per piece need not be completed on Forms 3602-PC for presorted First-Class Mail. If editions of the form earlier than May 1976 are used, two forms must be used: one for those qualifying for the lower presort rate, and one for those which do not. The form for those qualifying for the lower presort rate must be marked *PRESORT RATE* across the top of the form, and should only list the items which qualify for the lower presort rate. The form for the non-qualifying pieces must be marked *Presort Residual* across the top of the form and should only list the items which do not qualify for the lower presort rate.

362.4 Sorting Requirements (See Exhibit 362.4)

.41 Packages. When there are 10 or more pieces to the same 5-digit ZIP Code destination described in 362.451 and/or 50 or more pieces to the same 3-digit ZIP Code prefix destinations described in 362.452 and 362.453, they must be secured together as a package by the mailer. Rubber bands are the only acceptable means of securing packages in trayed mail.

.42 Rubber Bands. Rubber bands will be provided by the Postal Service and must be used by mailers to secure packages of bulk mail under the following conditions:

a. Packages of letter size pieces, as described in 128.2 are to be secured with rubber bands.

b. Packages should not exceed approximately 4 inches in thickness.

c. Packages up to one inch in thickness shall be secured with one rubber band around the girth. Packages between one and four inches in thickness shall be secured with two rubber bands, the first around the length and the second around the girth.

.43 Labeling of Packages. Package labels must be used to identify the makeup of presorted bundles of mail:

a. Place coded pressure sensitive labels in the lower left corner on the address side of the top piece in the package.

b. Do not date package labels.

.44 Traying and Pouching

.441 Traying. Packages are to be made up into trays in accordance with 362.45. Two-letter state abbreviations are to be used on labels.

.442 Pouching. Instead of traying, postmasters may authorize pouching or other suitable containerization of presorted mail when mutually beneficial to the mailer and the Postal Service and when the integrity of the presort can be maintained. Pouches must be made up in accordance with the procedures prescribed for trays in 362.45 and with the prescribed pouch tags. Packages must be pouched by the mailer when there are enough for the same destination to fill approximately one-third of a pouch. The total weight of pieces placed in one pouch must not exceed 50 pounds. *The residual must be clearly segregated from the lower rated presorted mail.*

.45 Sortation

.451 5-Digit ZIP Code Delivery Unit Packages and Trays

a. Packages. When there are 10 or more pieces, but less than a full tray, addressed to the same 5-digit ZIP Code delivery unit, they must be prepared, by the mailer, in packages of 10 or more pieces not more than 4 inches in thickness. The pieces in the packages must be faced in the same direction and secured with one or two rubber bands around each package as provided by 362.42. Red label D must be affixed to the lower left corner on the address side of the top piece in each package.

b. Trays. When there is enough mail for the same 5-digit ZIP Code delivery unit to fill a tray (approximately 500 pieces), a direct 5-digit tray must be prepared. Mail left over after filling direct trays must be bundled and placed in the appropriate city or SCF mail tray with the same first three digits. A pouch label must be firmly affixed to the end of the tray. Direct 5-digit trays or containers must be labeled in the following manner:

Line 1: City, State, 5-Digit ZIP Code
Line 2: Class, Contents
Line 3: Mailer, Mailer Location
Sample:

PHILADELPHIA PA 19118
FCM PRESORTED
FR JC COMPANY BOSTON MA

.452 City Packages and Trays

a. Packages. When there are 50 or more pieces, but less than a full tray, remaining for a city with a unique 3-digit ZIP Code prefix after the 5-digit ZIP Code delivery unit packages required by 362.451a have been prepared, they must be made up as city packages and must be secured with one or two rubber bands as provided by 362.42. Cities with unique 3-digit ZIP Code prefixes are listed in upper case letters in the listing of *ZIP Code Prefixes* contained in Publication 65, *National Post Office and*

ZIP Code Directory. Yellow label C must be affixed in the lower left corner on the address side of the top piece of each package.

b. Trays. City mail plus any packages for 5-digit ZIP Code delivery units within those cities not trayed, as provided for by 362.451b, must be prepared in city trays. A mixed city pouch label must be firmly affixed to the end of each tray. City trays must be labeled in the following manner:

Line 1: City, State, 3-Digit Destination
Line 2: Class, Contents
Line 3: Mailer, Mailer Location
Sample:

PHILADELPHIA PA 191
FCM PRESORTED
FR Q MAILERS BALTO MD

Mail left over after filling trays must be bundled in the packages and placed in an SCF tray.

.453 Sectional Center Facility (SCF) Packages and Trays

a. Packages. When there are 50 or more pieces, but less than a full tray, remaining for the same 3-digit ZIP Code prefix after the packages required by 362.451a and 362.452a have been prepared, they must be bundled as SCF packages to that 3-digit ZIP Code prefix. The pieces in the packages must be faced in the same direction and secured with one or two rubber bands as provided by 362.42. Green label 3 must be affixed in the lower left corner on the address side of the top piece in each package.

b. Trays. SCF Packages plus any 5-digit and city packages not trayed, as provided for by 362.451b and 362.452b, and which are destined for the same SCF must be prepared in SCF trays. An SCF pouch label must be firmly affixed to the end of each tray. SCF trays must be labeled in the following manner:

Line 1: SCF, State, SCF Code
Line 2: Class, Contents
Line 3: Mailer, Mailer Location
Sample:

SCF PHILADELPHIA PA 190
FCM PRESORTED
FR Q MAILERS BALTO MD

Presorted mail left over after filling SCF trays must be bundled into packages. It is recommended, but not required, that these be placed in state trays. If state trays are not prepared, bundles must be placed in mixed states trays.

.454 State Trays. It is recommended, but not required, that packages remaining after traying, in accordance with 362.451b, 362.452b, and 362.453b, be sorted to States, and placed in state trays (see Exhibit 362.4). A state pouch label in the format below must be firmly affixed to the end of the tray, except for trays for the State of mailing. State trays for the State of mailing must not be labeled.

Line 1: State Distribution Center, Code
Line 2: State, Class, Contents
Line 3: Mailer, Mailer Location
Sample:

DIS CHICAGO IL 606
IL FCM PRESORTED
FR Q MAILERS BALTO MD

.455 Mixed States Trays. Packages remaining after traying in accordance with 362.451b, 362.452b, 362.453b and 362.454, must be prepared in mixed states trays. A mixed states pouch label in the following format must be firmly affixed to the end of the tray:

Line 1: State Distribution Center, Code
Line 2: Class, Contents
Line 3: Mailer, Mailer Location
Sample:

DIS CHICAGO IL 606
MIXED STATES FCM PRESORTED
FR Q MAILERS BALTO MD

.456 Residual Mail

a. Pieces remaining after packages and trays have been prepared in accordance with 362.451 through 362.455 and Exhibit 362.4 are residual mail and are ineligible for the lower presort rate. The mailer must face and segregate residual pieces from the lower rate pieces by any of the following methods:

(1) Sequenced by 5-digit ZIP Codes.
(2) Sequenced by 3-digit ZIP Code prefixes.
(3) Separated by States.
(4) Separated by In-State, and Out-of-State.

Note: The mailer may choose which method to use.

b. Residual mail must be presented together with the lower rated portion of a mailing, but must be clearly segregated therefrom to facilitate verification of the quantities of both the lower rated and residual pieces.

c. In order to speed processing of the mail, it is recommended, but not required, that the mailer sort residual pieces into ZIP Code sequence or prepare state packages when there are 10 or more pieces to the same State. Appropriate facing slips or labels must be used. Orange label S must be affixed to the lower left corner of the address side of the top piece in each state package. Trays of residual mail prepared in ZIP Code sequence are not to bear a pouch label. Trays of residual mail made up for States other than the State of mailing must have a state pouch label in the following format securely affixed:

Line 1: State Distribution Center; Code;
Line 2: State, Class, Contents;
Line 3: Mailer, Mailer Location.
Sample:

DIS CHICAGO IL 606
IL FCM PRESORTED
FR RECORD BOSTON MA

d. If residual pieces have metered or precanceled postage affixed at the lower presort rate in accordance with 382.3, these residual pieces must be presented in groups of 100 pieces. Grouping may be accomplished by means of tabs, separator cards, or any other means acceptable to the postmaster. Any group of less than 100 such pieces must be identified and have the actual piece count shown.

.457 Exceptions to Bundling

a. The bundling requirements for presorted mail left over after filling full trays described in 362.451 through 362.455 may be waived when the use of separating tabs is approved by the local postmaster.

b. The local postmaster may also waive the bundling requirements for loose-packed presorted flat size mail as described in 128.3, sorted to one 5-digit ZIP Code destination, when there is enough quantity to fill a No. 3 sack.

362.5 Presort Verification

.51 Where Verified

.511 Accepting Post Office. Presorted first-class mailings will be verified at the post office of acceptance to establish that each mailing made at the presort rate is properly made up and presorted and qualifies for the presort rate.

.512 Collected at Customer's Facility. All presorted First-Class Mail collected at the customer's facility will be verified at a post office acceptance unit unless the mailing is made under an optional procedure or complete acceptance and verification is accomplished at the customer's facility. If a presorted first-class mailing, which has been collected at the customer's facility and brought to the appropriate acceptance unit, is found not to qualify due to makeup irregularities, improper postage, or other reason, the mailer must come to the acceptance unit to resolve the discrepancies.

.52 When a Presort Mailing Is Disqualified

.521 Options. When a presort mailing is disqualified, the mailer has the option of taking corrective action or paying the full regular single piece rate. When necessary, the return of such mailings to the customer's plant is the responsibility of the mailer. Discrepancies are to be corrected or the full first-class postage rate is to be paid before the mailing will be accepted.

.522 Correcting Presort Problems. Mailers who elect to correct presort problems that result in disqualification of the mailing will generally be unable to return metered mail to the acceptance unit on the same day originally presented. The date in the meter stamp or precancel postmark will thus reflect an incorrect mailing date. If the mailing is presented on the day immediately following its initial presentation and if it then meets all other acceptance requirements, the mailing will be accepted on a one-time only basis when:

a. Its initial presort deficiencies resulted from mailing equipment problems beyond the mailer's control, or

b. It is the customer's first mailing at the presort rate and the improper presort resulted from misinformation or misunderstanding of the presort requirements.

.523 Paying Single-Piece Rate. Mailers who elect to pay the single piece first-class rate instead of correcting the disqualification must pay postage in the following manner:

a. Metered Mail. Mailers of unqualified metered mailings must pay the difference in cash at the window and present their copy of the cash receipt at the acceptance point before the mail can be released for processing.

b. Permit Imprint. Mailers must correct Form 3602, *Statement of Mailing With Permit Imprints, or* Form 3602–PC, *Statement of Mailing-Bulk Rates,* for unqualified mailings to indicate that postage is to be paid at regular single piece or card rates. All other provisions of 145 are applicable to such mailings.

363 First-Class Zone Rated (Priority) Mail; Marking and Sealing

363.1 Marking. The word *Priority* must be placed prominently on the address side of flat mail preferably below the stamps and above the address, and on the top, bottom, and sides of parcels. The return address of the sender must be shown on the address side of each parcel mailed at zone rates of postage.

BILLING CODE 7710-12-M

HOW TO PREPARE PRESORTED FIRST-CLASS MAIL (500 PIECE MINIMUM)

Pieces qualifying for the Presort rate MUST be prepared in the following sequence:

DIRECT	CITY	SCF	STATE	MIXED STATES
10 or more to the same 5-digit ZIP Code.	**50 or more to the same first 3-digit ZIP Code uniquely* assigned to a City.** **Applies ONLY to those Cities listed in upper case letters in the ZIP Code Prefixes Section of the National ZIP Code and Post Office Directory.*	**50 or more to a first 3-digit ZIP Code assigned to a Sectional Center Facility.*** **(Each first 3-digit ZIP Code assigned to a SCF MUST be bundled separately)** **See National ZIP Code and Post Office Directory for SCF list*	**Recommended but not mandatory that remaining qualifying bundles be sorted to State Distribution Centers (SDCs) and placed in STATE TRAYS. Postmasters will provide mailers with listings of SDCs and the areas they serve.**	

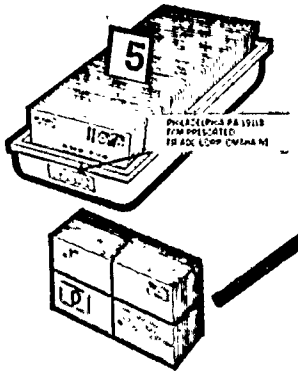

Qualifying Direct pieces that do not fill a DIRECT TRAY must be bundled into packages and placed in the following priority order:

CITY TRAY—When the first three digits of the Direct packages are the same as the first three digits uniquely assigned to a City

SCF TRAY—When the first three digits of the Direct packages are the same as any of the first three digits assigned to the SCF

STATE TRAY (Recommended but not mandatory)—When the state name on the Direct packages is the same as the state name on all the bundles in the tray

MIXED STATES TRAY—When the Direct packages are not presortable in full trays to the required or recommended categories

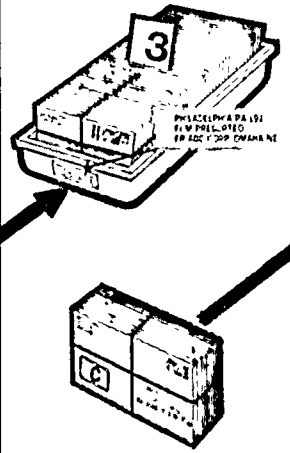

Qualifying City pieces that do not fill a CITY TRAY must be bundled into packages and placed in the following priority order:

SCF TRAY—When the first three digits of the City packages are the same as any of the first three digits assigned to the SCF

STATE TRAY (Recommended but not mandatory)—When the state name on the City packages is the same as the state name on all the bundles in the tray

MIXED STATES TRAY—When the City packages are not presortable in full trays to either the required or recommended category

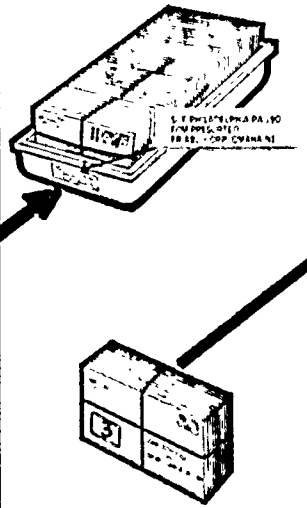

Qualifying SCF pieces that do not fill a SCF TRAY must be bundled into packages and placed in the following priority order:

STATE TRAY (Recommended but not mandatory)—When the state name on the SCF bundles is the same as the state name on all the packages in the tray

MIXED STATES TRAY—When the SCF packages are not presortable in full trays to the recommended category

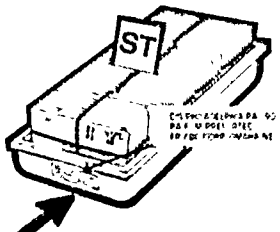

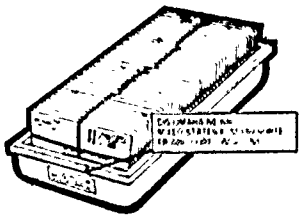

REMAINING MIXED QUALI MAIL

Any remaining mail not presorted into DIRECT, CITY, or SCF categories is INELIGIBLE for the lower rate. If it is included as part of the Presort mailing it must be completely segregated from the qualifying pieces placed in separate trays and sorted by one of the following schemes

- Sequenced by 5 digit ZIP Codes
- Sequenced by 3 digit ZIP Code prefixes
- Separated by states
- Separated by in state and out of state

Exhibit 362.4

363.2 Sealing. First-Class zone rated (priority) Mail may be sealed or left unsealed without affecting the rate of postage paid.

370 Mailing

371 Regular Single Piece and Card Rates

Matter mailed at the regular single piece rate or card rate may be deposited in any street collection box, mail chute, receiving box, cooperative mailing rack, or other place where mail is accepted. However, mail which has postage paid by means of permit imprint may only be deposited where authorized by 145.

372 Presort Rates

372.1 Matter mailed at the presort rates must be deposited at locations and times designated by the postmaster. Deposit of metered mail at other than those locations is considered basis for revocation of postage meter licenses in accordance with 144.23. The Postal Service may collect presorted First-Class Mail at the customer's facility when one of the following conditions is met:

a. Acceptance and verification are accomplished at the customer's facility.

b. Postage is paid under an optional procedure.

c. Postage is paid by meter strips.

d. Postage is paid by precanceled stamps.

NOTE: Presort mailings paid by permit imprint, and not covered by optional procedures, are not to be collected from the customer's facility.

372.2 In addition to the above requirements, the collection of presorted First-Class Mail must be part of an approved collection service for other classes of mail and space must be available on the transportation required for those classes. Separate or additional collection service for presorted First-Class Mail will not be established.

373 First-Class Zone Rated (Priority) Mail

First-Class zone rated (priority) Mail must be deposited at a post office, branch, or station, or handed to a rural or highway contract route carrier.

380 Payment of Postage

381 Single Piece Rates (See Exhibit 310)

381.1 Method of Payment. Mailers of first-class matter at regular single piece and card rates may pay postage by adhesive stamps, stamped envelopes and postal cards, meter stamps, and permit imprints.

381.2 Payment According to Weight. Postage must be paid at first-class rates on each piece of First-Class Mail according to its weight.

381.3 Aggregation of Letters

.31 More Than One Mailer. First-class postage must be paid on each individual letter when two or more individuals or organizations, or a party acting as the agent of two or more individuals or organizations, mail in one envelope, the bills, statements of account, or other letters of the individuals or organizations, to a mutual addressee. In addition, the address side of the envelope must be endorsed to show the number and weight of the enclosed letters from each sender. Organizations that are separate legal entities or which otherwise constitute separate enterprises are treated as separate "individuals or organizations" for purposes of this section, even if they are affiliated in some manner. These requirements apply even if the senders turn their letters over to someone else for the purpose of mailing them to the mutual addressee.

.32 More Than One Letter. An individual or organization may mail in one envelope more than one of its own letters and pay postage at the first-class rate on the weight of the piece if: (a) the letters are for persons who reside at the same residence, or who work for the same organization, located at the address shown on the envelope (provided the letters relate to the business of such organization); or (b) the letters are sent to a party who turns them over to other persons as part of a minor service provided in addition to a substantial and independent sales, service, or other business function he performs for such persons. Agents of a licensing authority may forward completed applications in one envelope to an office of the licensing authority and pay postage at the first-class rate on the weight of the piece.

382 Presort Rates (See Exhibit 310)

382.1 Method of Payment. Postage on mailings made at presort rates must be paid by meter stamps, permit imprints, or precanceled postage. Mailings of nonidentical weight may only have postage paid by the permit imprint under the provisions of 145.8 or 145.9.

382.2 Exact Postage on Each Piece. When precanceled postage or meter stamps are used, pieces must bear postage at the first-class presort rate on qualifying pieces, and at the full first-class rate on non-qualifying pieces except as provided in 382.3.

382.3 Presort Rate Postage on Residual Pieces

.31 Identical Pieces. For mailings paid by meter stamps or precanceled postage, the entire presorted mailing may have postage affixed at the lower presort rate if the mailing consists of pieces of identical size and weight.

.32 Nonidentical Pieces

.321 Letter Size Pieces. For mailings of letter size pieces which bear meter stamps or precanceled postage and weigh no more than 3 ounces, the entire presorted mailing may bear postage affixed at the lower presort rate if the residual portion is presented in groups of 100 pieces.

.322 Grouping. Grouping may be accomplished with the use of index tabs, separator cards, or any other means acceptable to the postmaster. Any group of less than 100 pieces is to be identified and the actual piece count is to be shown in a way which will facilitate verification. Nonidentical-weight residual pieces bearing postage at the lower presort rate shall not exceed 10 percent of the total volume of the mailing.

.33 Payment of Additional Postage. The additional postage for residual pieces, whether identical or nonidentical, must be paid by means of meter strips affixed to the back of Form 3602-PC, *Statement of Mailing-Bulk Rates.*

383 First-Class Zone Rated (Priority) Rates (See Exhibit 310)

Mailers of First-Class zone rated (priority) Mail may pay postage by adhesive stamps, meter stamps (see 144) or permit imprint (see 145).

390 Ancillary Services

391 Forwarding

391.1 Pieces Weighing 12 Ounces or Less. Pieces mailed at the regular single piece rate, card rate, or presort rate are forwarded free.

391.2 Pieces Weighing Over 12 Ounces. Pieces mailed at the First-Class zone rated (priority) rates are forwarded and charged additional postage at the zoned (priority) rates based on the distance between the forwarding and destination post offices. The additional postage is collected on delivery.

392 Return and Address Correction

392.1 All Except Card Rate

.11 Return. All First-Class Mail, except postal and post cards, that is undeliverable as addressed is returned to the sender without additional charge. Any postage due because of failure to fully prepay postage at the time of

mailing will be collected from the sender when the undeliverable mail is returned.

.12 Address Correction Service. When First-Class Mail bearing the *Address Correction Requested* is forwarded to a new address, the sender is notified on Form 3547, *Notice to Mailer of Correction in Address*, of the new address. See Exhibit 310 for the address correction service fee.

392.2 Postal and Post Cards. Undeliverable postal and post cards will be handled as follows:

a. A card bearing the sender's address and the words *Return Postage Guaranteed* is returned without the reason for nondelivery endorsed thereon. Postage at the card rate is collected on delivery to the sender. The piece will be marked *Not Deliverable as Addressed—Unable to Forward.*

b. A card bearing the words *Address Correction Requested* is returned to the sender with the reason for nondelivery endorsed thereon. The card serves as the address correction notice. See Exhibit 310 for the address correction service fee. There is not an additional charge for return postage.

c. If the full amount of card rate postage was not paid at the time of mailing, the amount of the deficiency is collected from the sender when the undeliverable card is returned.

d. When a card bearing the words *Address Correction Requested* is forwarded to a new address, the sender is notified on Form 3547, *Notice to Mailer of Correction in Address*, of the new address. See Exhibit 310 for the fee.

e. Cards not bearing the words *Return Postage Guaranteed* or *Address Correction Requested* are disposed of at the post office where they become undeliverable.

f. When single cards and double cards without postage affixed to the reply portion bear the sender's return address and a guarantee to pay return postage, they will be returned to sender charged with postage due at the rate applicable to post cards.

g. Double cards having postage affixed to the reply portion, and bearing the sender's return address and a guarantee to pay return postage must be:

(*1*) Marked on the original portion for return to the sender and endorsed to show the reason for nondelivery.

(*2*) Reverse folded so that address side of the reply portion is faced out.

(*3*) Postmarked on the face of the reply portion, and

(*4*) Returned without collection of additional postage.

Chapter 4

Second-Class Mail

410 Rates and Fees

411 Rates

411.1 General.

.11 Rate Elements. The postage charged for mailing second-class matter (other than matter on which postage must be paid at the nonsubscriber rates described in 411.42) is based on the application of the two following rate elements to the mailing:

a. Per-pound rate. The total weight of the mailing in pounds is multiplied by this rate.

b. Per-piece rate. The total number of pieces in the mailing is multiplied by this rate.

Note: The postage to be paid for a mailing is the sum of the charges determined by applying the per-pound rate and the charges determined by applying the per-piece rate.

.12 Form 3541. The mailer must use a Form 3541, *Statement of Mailing—Second-Class Publications*, to compute the applicable postage. A completed Form 3541 must be submitted by the mailer to the Postal Service with each mailing (See 482.1).

411.2 In-County Rates

.21 General application. In-county rates apply to copies of publications which are to be delivered to addresses within the county of publication, if such copies are:

a. Mailed at the office of original entry; or

b. Mailed at an office of additional entry within the county of publication.

NOTE: If the postmaster of an office of entry directs a publisher to deposit copies of the publication at a postal facility serving that office, those copies shall be considered as mailed at the office of entry. In-county rates are:

Per Piece	1.1¢
Per Pound	2.5¢

.22 Independent Cities. Each publication having original entry at an incorporated city which is situated entirely within a county or which is situated contiguous to one or more counties in the same State, but which is politically independent of such county or counties, shall be considered to be within and a part of the county with which it is principally contiguous, and copies mailed into that county are chargeable with postage at the in-county rates. Where more than one county is involved, the publisher will select the principal county and notify the postmaster.

411.3 Out-Of-County Rates

.31 General. These rates apply to copies of publications which will be delivered to addresses outside the county where published and entered, and on copies mailed at an office of additional entry located outside the county where published and entered.

.32 General Publications and Science of Agriculture Publications

.321 Per Pound Rates

a. General. Rates per pound or fraction of a pound:

Nonadvertising portion	13.1¢
Advertising portion:	
Zones 1 and 2	17.5¢
Zone 3	18.4¢
Zone 4	19.9¢
Zone 5	22.7¢
Zone 6	26.0¢
Zone 7	29.4¢
Zone 8	31.8¢

b. Science Of Agriculture Exception. When the total number of copies furnished during any 12-month period to subscribers residing in rural areas consists of at least 70 percent of the total number of copies distributed by any means for any purpose, the rate for the advertising portion of copies going to zones 1 and 2 is 8.7¢ per pound.

.322 Per Piece Rates. The five per piece rates reflect the level of presort (see 464). They are:

a. For mailings of 5,000 or more copies per issue:	
Level A-pieces not qualifying for Level B or C (SCF, states, mixed states)	7.0¢
Level B-unique 3-digit prefix city and 5-digit ZIP Code destinations	5.4¢
Level C-Carrier route or finer sort	4.4¢
b. For mailings of less than 5,000 out-of-county copies per issue:	
Level D-material not qualifying for level E	2.1¢
Level E-unique 3-digit prefix city and 5-digit ZIP Code destinations	1.7¢

Note: Copies of second-class publications that do not qualify for Level B, or C, or E must be sorted to the finest extent possible as provided in 464.

.33 Special Nonprofit Rate

.331 Pound Rate. Rates per pound or fraction of a pound:

Nonadvertising portion	5.7
Advertising portion:	
Zones 1 and 2	8.7
Zone 3	9.4
Zone 4	10.8
Zone 5	12.5
Zone 6	14.1
Zone 7	15.4
Zone 8	16.6

Note.—The advertising zone rates are applicable to issues in which the advertising portion exceeds 10 percent. Issues containing 10 percent or less advertising shall be computed at the nonadvertising rate.

.332 Piece Rate

The per piece charge is	2.1

.34 Classroom Publications

.341 Pound Rate. Rates per pound or fraction of a pound:

Nonadvertising portion	3.7
Advertising portion:	
Zone 1 and 2	4.9
Zone 3	5.5
Zone 4	6.7

Zone 5	8.6
Zone 6	10.8
Zone 7	12.5
Zone 8	14.3

.342 Piece Rate

The per piece charge is	1.3

411.4 Rates for Nonsubscriber Copies

.41 Commingled and Presorted With Subscribers' Copies. For sample copies in excess of the 10 percent allowance, or copies to persons not included in the list of subscribers, the rate is 15.3¢ per pound or fraction of a pound, plus 5.8¢ per piece.

.42 Transient Rate for Noncommingled Copies. For copies mailed by the general public (persons other than publishers or registered news agents), or copies mailed by publishers or registered news agents and not commingled and presorted as part of the regular mailing of subscriber copies, the rate is 10¢ for the first 2 ounces, 6¢ for each additional ounce or fraction thereof, or the fourth-class rate, whichever is lower. Rates are computed on each individually addressed copy or package of unaddressed copies.

412 Fees

412.1 Fees for Second-Class Privileges.The fees to accompany applications for second-class original entry, reentry, or additional entry, or for registration as a news agent, are:

Kind of Application	Amount
a. Original Entry	$120
b. News Agent Registry	$30
c. Reentry because of change in title, frequency of issue, office of publication, or other reason	$30
d. Additional Entry (Only one fee is collectable for an application for additional entry even if the additional entry for which application is made modified another previously approved additional entry.)	$50

Note. If an application is not approved, no part of the fee is returned to the applicant.

412.2 Fee for Address Correction Service. The fee for address correction service is 25¢ per notice issued.

420 Classification

421 Requirements for All Second-Class Publications

421.1 Periodical Publications. Only newspapers and other periodical publications are eligible for mailing at seond-class rates of postage. The term *periodical publication* includes:

a. Any catalog or other course listing, including mail announcements of legal texts which are part of post-bar admission education issued by any institution of higher education or by a nonprofit organization engaged in continuing legal education.

b. Any loose-leaf page or report (including any index, instruction for filing, table or sectional identifier which is an integral part of such report) which is designed as part of a loose-leaf reporting service concerning developments in the law or public policy.

421.2 Regular Issuance

.21 Each second-class publication must be issued at a regular frequency of at least four times per year. The publisher must determine the number of issues to be published each year and adopt a statement of frequency that will show at what regular intervals the issues will appear. Examples of permissible statements of frequency are:

Daily
Semiweekly (twice a week)
Weekly
Biweekly (every two weeks)
Semimonthly (twice a month)
Monthly
Quarterly
Four times a year in Jan., Feb., Oct. and Nov.
Weekly during school year
Monthly except during July and August

.22 All issues must be published regularly as called for by the statement of frequency. If the publisher wishes to change the number of issues scheduled or the statement of frequency, he must adopt a new statement of frequency by filing an application for second-class reentry (see 444). If a publication fails to maintain regular issuance according to its stated frequency, the postmaster will remind the publisher of the above requirements and request compliance. If irregular issuance continues, the Office of Mail Classification, USPS Headquarters, will revoke the publication's second-class mail privileges (see 441.5).

421.3 Issuance From a Known Office of Publication. The publisher of a second-class publication must maintain *a known office of publication* at the location where the original entry for second-class mail privileges is authorized. The known office of publication must be a public office where the business of the publication is transacted during normal business hours. The circulation records of the publication must be maintained and available for examination by postal officials at the known office of publication.

421.4 Printed Sheets. Second-class publications must be formed of printed sheets. They may not be reproduced by stencil, mimeograph, or hectograph processes. Reproduction by any other process is permissible. Any style of type may be used.

422 Types of Authorizations

422.1 Qualifications Categories. All second-class publications must be authorized under one of four qualification categories. These are: General Publications, Publications of Institutions and Societies, Publications of State Departments of Agriculture, and *Foreign Publications.* The specific requirements for each category are set forth in 422.2 through 422.5. These specific requirements are in addition to the general requirements set forth in 421, which all second-class publications must meet. *Note:* Any publication which meets the requirements of 421 and 422.2 may be entered as a general publication irrespective of the nature of the publisher.

422.2 General Publications

.21 Contents. General publications must be originated and published for the purpose of disseminating information of a public character or they must be devoted to literature, the sciences, art, or some special industry.

.22 Circulation Requirements

.221 List of Subscribers. General publications must have a legitimate list of subscribers who have paid or promised to pay, at a rate above a nominal rate, for copies to be received during a stated time. Persons whose subscriptions are obtained at a nominal rate (see 422.222) shall not be included as a part of the legitimate list of subscribers. Copies sent in fullfillment of subscriptions obtained at a nominal rate must be charged with postage at nonsubscriber rates (see 411.4).

.222 Nominal Rate Subscriptions. Nominal rate subscriptions include those which are sold:

a. At a subscription price that is so low that it cannot be considered a material consideration.

b. At a reduction to the subscriber, under a premium offer or any other arrangement, of more than 50 percent of the amount charged as the basic annual rate for a subscription which entitles the subscriber to receive one copy of each issue published during the subscription period. The value of a premium is considered to be its actual cost to the publisher, the recognized retail value, or the represented value, whichever is highest.

.223 Free or Nominal Rate Circulation. Publications primarily designed for free circulation and/or circulation at nominal rates may not qualify for the general publications category. Publications are considered primarily designed for free circulation and/or circulation at nominal rates

when one-half or more of all copies circulated are provided free of charge to the ultimate recipients, or are paid for at nominal rates by the ultimate recipients, or when other evidence indicates that the intent of the publisher is to circulate the publication free and/or at nominal rates. The distribution of all copies of a publication is considered, whether circulated in the mails or otherwise.

.23 Advertising Restrictions

.231 Publications Designed for Advertising Purposes. General publications primarily designed for advertising purposes may not qualify for second-class privileges. These include, but are not limited to:

a. Publications which contain more than 75 percent advertising in more than half of the issues published during any twelve month period.

b. Publications owned or controlled by individuals or business concerns and conducted as an auxiliary to and essentially for the advancement of any other business or calling of those who own or control them.

c. Publications that consist principally of advertising and articles about advertisers in the publication.

d. Publications that have only a token list of subscribers and that print advertisements free for advertisers who pay for copies to be sent to a list of persons furnished by the advertisers.

e. Publications published under a license from individuals or organizations and that feature other businesses of the licensor.

.232 Definition of Advertising.

a. General. The term *advertising* includes all material for the publication of which a valuable consideration is paid, accepted, or promised; that calls attention to something for the purpose of getting people to buy it, sell it, seek it, or support it.

b. Specific. If an advertising rate is charged for the publication of reading matter or other material, such material shall be demed to be *advertising.* Articles, items, and notices in the form of reading matter inserted in accordance with a custom or understanding that textual matter is to be inserted for the advertiser or his products in the publication in which a display advertisement appears, are deemed to be *advertising.* If a newspaper or periodical advertises its own services or issues, or any other business of the publisher, whether in the form of display advertising or editorial or reading matter, this is deemed to be *advertising.* Public service advertisements for which no consideration has been paid are not considered advertising for postal purposes.

422.3 Publications of Institutions and Societies

.31 Types of Publications Eligible. A publication which meets the basic requirements of 421 and contains only the publisher's own advertising, and not, under any conditions, the advertising of other persons or organizations is eligible for second-class mail privileges if it is:

a. Published by a regularly incorporated institution of learning. For purposes of this section, institutions of learning are those organizations of a permanent nature where instruction is given in the higher branches of education only, and which owe their origin to private or public munificence, and are established solely for the public good, and not for private gain.

b. Published by a regularly established state institution of learning supported in whole or in part by public taxation.

c. A bulletin issued by a state board of health or a state industrial development agency.

d. A bulletin issued by a state conservation or fish and game agency or department.

e. A bulletin issued by a state board or department of public charities or corrections.

f. Published by any public or nonprofit private elementary or secondary institution of learning or its administrative or governing body.

g. A program announcement or guide published by an educational radio or television agency of a State or political subdivision thereof or by a nonprofit educational radio or television station.

h. Published by or under the auspices of a benevolent or fraternal society or order organized under the lodge system and having a bona fide membership of not less than 1,000 persons.

i. Published by or under the auspices of a trade union.

j. Published by a strictly professional, literary, historical, or scientific society. Note: For the purposes of this section:

(1) A strictly professional society consists solely of a group of persons who have obtained professinal status by advanced educational training, experience, specialized interest, or peer examination. Where applicable, public certification in a particular field of the arts or sciences such as engineering, law, or medicine will be considered a factor in determining eligibility. The members must be engaged in their given profession in accordance with its binding standards of performance and conduct on which the public is entitled to rely.

(2) A strictly literary society is an organization whose exclusive purpose is to encourage and cultivate an appreciation of general literature, a literary subject, or an author who has achieved recognition through literary accomplishment. The membership must be comprised of individuals who discuss or analyze the style, composition, or other characteristics of the literature or authors in which they have a common interest.

(3) A strictly historical society is an organization whose exclusive purpose is to discover, collect, and systematically record the history of civilization or a particular segment thereof. Such a society should provide for the preservation of such material and for its accessibility to the members of the society and the general public. Furthermore, a strictly historical society should extend educational services by producing published matter, holding regular meetings, presenting addresses and lectures, or using mass media.

(4) A strictly scientific society is an organization whose exclusive purpose is to bring individuals together for the purpose of cooperating in scientific investigations and pursuits in the applied, pure, or natural sciences, and to disseminate technical information dealing with these subjects.

k. Published by a church or church organization. For purposes of this section, the term "church" applies only to congregations of worshippers who actually conduct religious services. The term "church organization" embraces organizations of individual churches, organizations which are subsidiary to individual churches, and national or regional organizations of churches.

.32 Provisions for General Advertising. A publication qualifying under 422.31h through k may contain advertising of other persons or organizations under the following conditions:

a. The publication must not be designed or published primarily for advertising purposes (see 422.231).

b. The publication must be originated and published to further the objects and purposes of the qualifying organization.

c. The circulation of the publication must be limited to copies mailed to members who pay, either as a part of their dues or assessments or otherwise, not less than 50 percent of the lowest subscription price paid by other subscribers and to exchanges, except that 10 percent of total circulaton may be sample copies (see 426.1). When members pay for their subscriptions as a part of their dues or assessments,

individual subscription forms or receipts are not required.

422.4 Publications Issued By State Departments of Agriculture. A publication issued by a state department of agriculture which meets the basic requirements of 421 is eligible for second-class mail privileges if it:

a. Is published only to further the objects of the department; and

b. Does not contain any advertising matter.

422.5 Foreign Publications. Foreign newspapers and other periodicals of the same general character as domestic publications entered as second-class mail may be granted second-class mail privileges. The publishers or their agents may apply for transmission of these publications through the mail at the same second-class rates as if published in the United States. Review of this application will be based only on United States circulation. This section does not authorize the transmission through the mail of a publication which violates a copyright granted by the United States. The known office of publication can be the office of the publisher's agent (see 421.3).

423 Special Second-Class Privileges

423.1 Special Nonprofit Rate

.11 Authorization. Only publications which meet the requirements of 423.12 or 423.14 and which have received specific authorization from the Postal Service may be mailed at the special nonprofit rate in 411.33. (See application procedure in 443.) A publication must be both granted second-class entry and issued a special rate authorization before it may be mailed at the special nonprofit rate.

.12 Publications of Qualified Nonprofit Organizations

.121 Types of Organizations. A publication issued by and in the interest of one of the following types of organizations (see definitions in 423.13) qualifies for the special nonprofit rate if the organization is not organized for profit and none of its net income inures to the benefit of any private stockholder or individual:

a. Religious
b. Educational
c. Scientific
d. Philanthropic
e. Agricultural
f. Labor
g. Veterans'
h. Fraternal

.122 Primary Purpose. The standard of *primary purpose* used in the definitions of qualified nonprofit organizations in 423.13 requires that the organization be both organized and operated for the primary purpose. Organizations which *incidentally* engage in qualifying activities do not meet the primary purpose test.

.13 Definitions of Eligible Nonprofit Organizations

.131 Religious. A nonprofit organization whose primary purpose is one of the following:

a. To conduct religious worship (for example, churches, synagogues, temples, or mosques).

b. To support the religious activities of non-profit organizations whose primary purpose is to conduct religious worship.

c. To further the teaching of particular religious faiths or tenets, including religious instruction and the dissemination of religious information.

.132 Educational. A nonprofit organization whose primary purpose is the instruction or training of individuals for the purpose of improving or developing their capabilities or the instruction of the public on subjects beneficial to the community. *Note:*

a. An organization may be educational even though it advocates a particular position or viewpoint, as long as it presents a sufficiently full and fair exposition of the pertinent facts to permit an individual or the public to form an independent opinion or conclusion. Conversely, an organization is not considered educational if its principal function is the mere presentation of unsupported opinion.

b. Examples of educational organizations are:

(*1*) Any organization (such as a primary or secondary school, a college, or professional or trade school) which has a regularily scheduled curriculum, a regular faculty, and a regularly enrolled body of students in attendance at a place where educational activities are regularly carried on.

(2) Any organization whose activities consist of presenting public discussion groups, forums, panels, lectures, or similar programs. Such programs may be on radio or television.

(3) Any organization which presents a course of instruction by means of correspondence or through the use of television or radio.

(4) Museums, zoos, planetariums, symphony orchestras, and similar organizations.

.133 Scientific. A nonprofit organization whose primary purpose is one of the following:

a. To conduct research in the applied, pure, or natural sciences.

b. To disseminate technical information dealing with the applied, pure, or natural sciences.

.134 Philanthropic (Charitable). A nonprofit organization organized and operated for purposes beneficial to the public. Note:

a. Examples of philanthropic organizations include those which are organized to:

(1) Relieve the poor and distressed or the underprivileged.

(2) Advance religion.

(3) Advance education or science.

(4) Erect or maintain public buildings, monuments, or works.

(5) Lessen the burdens of government.

(6) Promote social welfare for any of the above purposes or to lessen neighborhood tensions; to eliminate prejudice and discrimination; to defend human and civil rights secured by law; or to combat community deterioration and juvenile delinquency.

b. The fact that an organization which is organized and operated to relieve indigent persons may receive voluntary contributions from those persons does not necessarily make it ineligible for special nonprofit rates as a philantropic organization. The fact that an organization, in carrying out its primary purpose, advocates social or civic changes or presents ideas on controversial issues to influence public opinion and sentiment towards an acceptance of its views, does not make it ineligible for special nonprofit rates as a philantropic organization.

.135 Agricultural. A nonprofit organization whose primary purpose is the betterment of the conditions of those engaged in agricultural pursuits, improvement of the grade of their products, and the development of a higher degree of efficiency in agriculture. Note:

a. The organization may further and advance agricultural interests through any of the following activities:

(1) Educational activities.

(2) Holding agricultural fairs.

(3) Collecting and disseminating information concerning cultivation of the soil and its fruits or the harvesting of marine resources.

(4) Rearing, feeding, and managing livestock, poultry, bees, etc.

(5) Other activities related to agricultural interest.

b. The term agricultural also includes any nonprofit organization whose primary purpose is collecting and disseminating information or materials related to agricultural pursuits.

.136 Labor. A nonprofit organization whose primary purpose is the betterment of the conditions of workers. Note:

a. Labor organizations include, but are not limited to, organizations in which

employees or workers participate whose primary purpose is to deal with employers concerning grievances, labor disputes, wages, hours of employment, working conditions, etc.

b. Labor unions and employees' associations are examples of organizations formed for these purposes.

.137 Veterans'. A nonprofit organization of veterans of the armed services of the United States, or an auxiliary unit or society of, or a trust or foundation for, any such post or organization.

.138 Fraternal. A nonprofit organization which meets *all* of the following criteria:

a. Has as its primary purpose the fostering of fellowship and mutual benefits among its members;

b. Is organized under a lodge or chapter system with a representative form of government;

c. Follows a ritualistic format; and

d. Is comprised of members who are elected to membership by vote of the members.

Note: Fraternal organizations include such organizations as the Masons, Knights of Columbus, Elks, and college fraternities or sororities, and may include members of either or both sexes. Fraternal organizations do not encompass such organizations as business leagues, professional associations, civic associations, or social clubs.

.14 Publications of Other Qualified Organizations. The following publications qualify for the special nonprofit rate without regard to the nonprofit status of the publishing organization:

a. Publications issued by and in the interest of associations of rural electric cooperatives.

b. One publication of the official highway or development agency of the State which meets all the requirements of 422.2 and contains no advertising,

c. Program annoucements or guides published by an educational radio or television agency of a State or political subdivision thereof or by a nonprofit educational radio or television station.

d. One conservation publication published by an agency of a State which is responsible for management and conservation of the fish or wildlife resources of that State.

423.2 Classroom Rate. The classroom rate in 411.34 applies only to religious, educational, or scientific publications designed specifically for use in school classrooms or in religious instruction classes. See 443 for the application procedures for authorization to mail at the classroom rate.

423.3 Science of Agriculture Rate. When at least 70 percent of the total number of copies of any second-class publication devoted to promoting the science of agriculture are distributed, during any 12-month period, to subscribers residing in rural areas, the rate in 411.321b, instead of the rate in 411.321a, may be paid for the advertising portion of all copies destined for zones 1 and 2. All copies of the publication distributed by any means for any purpose will be considered in determining whether a publication meets the 70 percent requirement.

424 Second-Class Mailing Privileges for News Agents

424.1 Definition. News agents are persons or concerns selling two or more second-class publications published by more than one publisher. News agents must be authorized by the Postal Service before they may mail second-class publications at the second-class rates. The application procedures are described in 441.

424.2 Information Required. Before a news agent may mail at second-class rates he must provide the postmaster, at the office of mailing, evidence that the copies of publications offered for mailing are entitled to second-class rates, and that they are sent to actual subscribers or to other news agents for the purpose of sale. A second-class imprint in the copies is sufficient evidence that a publication is entitled to second-class rates.

424.3 Remailing Without Payment of Postage Prohibited. A news agent may not remove packages of copies from a post office, write an address on each copy, and return them to the office for dispatch or delivery without paying additional postage.

424.4 Copies Subject to the Nonsubscriber Rates. Unsold copies returned to publishers or other news agents, or copies sent to other news agents for purposes other than sale, or to persons not having subscriptions with news agents, are subject to the nonsubscriber rates in 411.4.

424.5 Return of Portions of Unsold Publications. Portions of publications which are returned to publishers to show that copies have not been sold are subject to postage at third- or fourth-class rates, according to weight.

425 What May Be Mailed at the Second-Class Rates

425.1 Complete Copies. Complete copies of the regular issues of a second-class publication may be mailed at the applicable second-class rates in 410. Copies which are not complete because pages or portions of pages are missing will be charged with postage at the applicable third- or fourth-class rates.

425.2 Editions and Special Issues. The following kinds of editions and special issues may be mailed at the second-class rates:

a. Extra issues or editions published for the purpose of communicating additional news and information received too late for insertion in the regular issue or edition and not intended for advertising purposes.

b. Separate editions of the issues of a second-class publication. Separate publications will not be accepted as editions.

c. Issues containing annual reports, directories, lists, and similar texts as a part of the contents, as long as the copies are not distinguished from the regular issues by bearing designations indicating they are annuals, directories, catalogs, yearbooks, or other types of separate publications. The regular annual subscription price must include copies of such issues.

425.3 Back Numbers and Reprints. The following kinds of back numbers and reprints of a publication may be mailed at the second-class rates:

a. Unbound copies of back numbers as long as the publication's second-class entry is in effect.

b. Unbound reprint copies of daily publications printed within one week of the date of issue.

c. Unbound reprint copies of other than daily publications printed before the next issue is printed. Other reprints and bound back numbers are charged with postage at the applicable third- or fourth-class rates.

425.4 Supplements. Issues may include supplements subject to the following conditions:

a. The supplement must be germane to the issue, and prepared to complete it, having been omitted in the interest of space, time, or convenience. Publications which are distinct from and independent of the regular issue, such as catalogs, circulars, handbills, posters, and other special advertisements, are not germane to the issue and must not be inserted as supplements. Advertising supplements must be specifically prepared for inclusion in publications having second-class status to be permissible in copies mailed at the second-class rates. If they are not so prepared, but are produced primarily for distribution either through the mails or outside the mails as separate and independent advertising material, they are not permissible supplements in second-class publications. *Note:* The following are further considerations

regarding preprinted advertising supplements:

(*1*) If a publisher is furnished material to be carried as a preprinted advertising supplement in copies of his second-class publication which are mailed at the second-class rates, it is incumbent upon him to ascertain that more than 50 percent of the total number of copies of such material which will be distributed by any means will be included in second-class publications.

(*2*) Publishers must be paid at advertising rates and charges for carrying preprinted advertising supplements germane to the issue which are furnished to them by advertisers or others.

b. Supplements must bear the title of the publication preceded by the words *Supplement to.*

c. Supplements must be folded and mailed with the regular issue.

425.5 Parts and Sections

.51 Regular Pages. The regular pages of a second-class publication may be prepared in parts or sections. Enclosures prohibited as supplements (see 425.4) may not be prepared as parts or sections.

.52 Title. Each part of section must show the title of the publication.

.53 Number. The number of parts or sections in the issue must be stated on the first page of the first part or section.

.54 Restrictions. Parts or sections produced by someone other than the publisher may not be mailed at second-class rates if these parts or sections are prepared by or for advertisers or if they are provided to the publisher free or at a nominal charge. Publishers must, upon request, submit to the Office of Mail Classification, Rates and Classification Department, USPS Headquarters, Washington, DC 20260 contracts entered into with producers of parts or sections.

425.6 Enclosures. The only enclosures permitted in second-class publications are receipts and orders for subscriptions. These may either be inserted loose or bound in the publication. Preparation methods include, but are not limited to:

a. Printed or written;

b. Printed on cards and envelopes including business replies;

c. Arranged to include coin receptacles; or

d. Arranged as combination forms for two or more second-class publications issued by the same publisher.

425.7 Additions. Only the following words, characters, figures, and phrases may be added to copies of second-class publications after they are printed, or placed on the envelopes or wrappers in which they are mailed:

a. Name and address of the person to whom the copies are sent;

b. Name and address of the publisher or sender;

c. Index figures of subscription book, either printed or written;

d. Printed title of the publication and its place of publication;

e. Written or printed words or figures, or both, indicating the date on which the subscription ends;

f. Corrections of typographical errors;

g. A mark, except by written or printed words, to designate a word or passage to which it is desired to call attention;

h. The words *Sample Copy* when the copies are sent as samples;

i. The words *Marked Copy* when the copies contain a marked item or article;

j. The words *Return Postage Guaranteed* when undeliverable copies are to be returned to the sender;

k. The number of copies enclosed if shown on the wrapper or face of a package;

l. Messages and notices of a civic or public-service nature placed on the envelopes, wrappers, or covers in which the publication is mailed, if the publisher does not charge for their addition;

m. Requests for address correction information from the addressee.

n. A package identification notice such as *1 of 4, 2 of 4,* etc. on package wrappers to indicate multi-package shipments to one addressee; provided such endorsements do not interfere with the clarity of the address; or

o. Material including advertising matter, printed on a protective cover as part of the normal printing process for the publication. *Note:* Some publishers of second-class publications attach additional covers around the outside of their publications to protect the publications. Unlike an envelope or a wrapper, a protective cover is considered an integral part of the publication if it completely covers the front and back of the publication, is open on three ends, and is permanently attached to the publication. Material may only be added to the protective cover after the printing of the publication if the material is a permissible addition as defined above. When calculating the postage charge for a second-class publication with a protective cover, any material printed on the cover must be accounted for in the measurements used to determine the percentage of advertising matter. A protective cover is not a substitute for an envelope or wrapper when a publication is required to be placed in an envelope or wrapper for mailing (see 462.21). Advertising matter or other printed material, with the exception of the permissible additions, may not be included on envelopes or wrappers of second-class publications.

425.8 Novelty Pages

.81 Definition. Novelty pages are printed sheets that may be used for purposes other than reading, or printed sheets with novel characteristics. Novelty pages must be prepared specifically for and intended as integral pages of second-class publications. Blank sheets, envelopes, and all other types of containers are not novelty pages. The total number of novelty pages in an issue may constitute only a minor portion of the total pages. Excessive use of novelty pages gives publications the characteristics, both as to format and purpose, of books, catalogs, or other third- or fourth-class mail.

.82 Examples. The following are examples of novelty pages that may be included in second-class publications:

a. Printed pages bearing words, perforations, or symbols indicating they may be detached;

b. Pages having printed pictures for cutting out;

c. Printed pages with blank spaces for writing or marking;

d. Pages with printed illustrations permanently pasted to them. Envelopes, wrappers, pockets, all other types of containers, and any contents thereof are not printed illustrations.

e. Printed coupon(s) or printed application or order form(s) prepared as pages.

f. Pages (other than regular size pages of a publication having portions which are printed coupon(s) or printed application or order forms(s)).

g. Pages having printed coupon(s), or printed application or order form(s) permanently attached. Such coupon(s), or application or order form(s) must relate directly to advertising or editorial material printed on the page to which they are permanently attached.

425.9 Advertisements

.91 Integral Part of the Publication. Advertisements must be an integral part of the publication. Advertisements must be permanently attached in bound publications. Pagination is not required in periodicals. However, it is recommended that some or all pages of a periodical be numbered or allowed for in the pagination, in a manner which indicates that pages containing advertisements are an integral part of

the publication, rather than an independent publication. Independent publications may not be inserted in periodicals as advertisements.

.92 Physical Makeup. The physical makeup of advertisements may include such features as the following:

a. Different advertisements may occupy the same space in different copies of the same issue.

b. Advertisements larger than the regular pages are permissible and may be prepared for folding out horizontally, vertically, or both.

c. Advertisements may be die-cut or deckle-edged.

d. Multiple page advertisements may be prepared for detachment as permitteed by 425.82a and may be held together by staples or other means separate from and in addition to the regular binding of the publication.

e. Advertisements may be printed on sheets of paper, cellophane, foil, or other similar materials.

426 Copies Not Paid for by the Addressee

426.1 Sample Copies

.11 Mailing Conditions. Complete copies of regular issues or editions may be mailed as samples at second-class rates under the following conditions:

a. Sample copies of a publication may be mailed at any time during a calendar year at the same rates as subscriber copies (see 410) up to a limit of 10 percent of the total weight of the copies mailed to subscribers during the calendar year. Copies mailed at all offices of entry are included in this determination.

b. Sample copies mailed in excess of the 10 percent limit must be mailed at nonsubscriber rates (see 411.4).

.12 Copies Mailed for Advertising Purposes. Copies mailed for advertising purposes under arrangements with advertisers, or others, and copies mailed by a publisher acting as an agent for an advertiser, may not be mailed as samples.

.13 Addressing and Mailing. Sample copies may be mailed to boxholders with each copy addressed in the simplified manner shown in 122.41. Copies so addressed must be mailed to each boxholder on a rural or highway contract route, or to each boxholder at post offices not having city letter carrier service. Copies mailed in this manner may not be mailed only to nonsubscriber. All copies sent to nonsubscribers are sample copies. In addition, if such a mailing results in a subscribers receiving a copy in addition to his subscriber copy, the additional copy is considered to be a sample.

426.2 Copies Paid for By Advertisers. Copies paid for by advertisers or others for advertising purposes may be mailed only at nonsubscriber rates (see 411.4).

426.3 Copies Paid for As Gifts. A portion of the subscription list may consist of persons whose subscriptions were paid by other individuals as gifts. Subscriptions paid by advertisers or other interested persons to promote their own interests, and subscriptions given free by the publishers are not gift subscriptions. Postage on these copies must be paid at nonsubscriber rates (see 411.4).

426.4 Exchange Copies. A minor portion of the subscription list may consist of publishers to whom copies are sent in return for exchange copies of the recipients' publications. Only one copy may be sent to each publisher.

426.5 Expired Subscriptions. Copies may be mailed at the appropriate subscriber rates of postage (see 410) for 6 months after a subscription has expired, if the publisher makes a good faith attempt to obtain payment or a promise of payment for a renewal during the 6-month period. Postage must be paid at nonsubscriber rates (see 411.4) for copies sent after the 6 months to persons who have not renewed.

426.6 Complimentary Copies. All complimentary copies including copies sent in fulfillment of subscriptions given free by the publishers must be mailed at nonsubscriber rates (see 411.4).

426.7 Advertisers' Proof Copies. One complete copy of each issue may be mailed at the applicable subscriber rates in 410 to each advertiser in the issue to prove that his advertisement(s) have been printed. Or, copies may be mailed to representatives or agents of the advertiser. The number of proof copies of each issue sent under this section may not exceed the number of advertisers in the issue.

426.8 Copies Mailed by Printer. Copies mailed by a printer to a publisher are chargeable with postage at the applicable third- or fourth-class rate (see 610 and 710).

430 Service Objectives

431 General

Second-class publications may receive deferred service. The Postal Service does not guarantee the delivery of second-class mail within a specified time.

432 Newspaper Treatment

432.1 Publications authorized second-class entry may be given expeditious distribution, dispatch, transit handling and delivery insofar as is practicable. This service is usually referred to as *newspaper treatment.* In order to be eligible for *newspaper treatment,* a publication must be published weekly, or more frequently, and feature news of general public interest.

432.2 The postmaster at the office of original entry will decide whether a publication qualifies for *newspaper* treatment. If the postmaster is in doubt as to whether a publication qualifies for *newspaper* treatment, he will submit a copy of the publication and a statement of the pertinent facts to the Office of Mail Classification, Rates & Classification Department, USPS Headquarters, Washington, DC 20260. The Office of Mail Classification will then decide whether the publication qualifies and inform the local postmaster and the publisher of its decision and the reasons for that decision.

440 Authorizations and Permits

441 Original Entry for Publishers and News Agents

441.1 Application Forms and Copies Filed

.11 General. An application must be filed by the publisher before a publication will be considered for second-class authorization. Copies of all application forms may be obtained from the local postmaster. The headings on the forms describe the information the publisher must furnish. Two copies of the issue described in the application must also be filed. When one-half or more of the total copies distributed are purchased by news agents for resale or are consigned to news agents for sale, two copies each of at least four issues must be filed before an application is either approved or disapproved, to demonstrate compliance with the requirement for regular issuance at least four times each year. If the publication is printed in a foreign language, a brief translation of the contents of the copies must be furnished with the application. Generally a synopsis of each article and advertisement will suffice.

.12 General Publications

.121 Application. An application for a publication which seeks authorization under 422.2 must be filed on Form 3501. *Application for Second-Class Mail Privileges* (pink form), at the post office serving the known office of publication. The publisher must complete all

applicable items on Form 3501. When one-half or more of the total copies distributed are purchased by news agents for resale or are consigned to news agents for sale, postmasters will not accept an application on Form 3501, unless the publisher has completed the application by furnishing all of the information called for by questions 30 and 31.

.122 **Supporting Information.** The publisher must maintain records adequate to establish that the publication is not primarily designed for free circulation or circulation at nominal rates. See 447 for a description of the types of records needed to satisfy this requirement. The postmaster of the office of application will review the Form 3501 and verify the accuracy and adequacy of the publisher's records. A list of gift subscriptions and other items required by Form 3501 must be furnished.

.13 **Publications of Institutions and Societies.** An application for a publication which seeks authorization under 422.3 must be filed on Form 3502, *Application for Second-Class Mail Privileges* (yellow form), at the post office serving the known office of publication. The information indicated on the form must be submitted with the application to establish that the publication is issued by one of the institutions or societies listed in 422.3. The postmaster will verify all of the information on the application form. (See 447 for necessary publisher records.)

.14 **Publications Issued By State Departments of Agriculture.** An application for a publication which seeks authorization under 422.4 must be filed on Form 3502 at the post office serving the known office of publication. Evidence that the publication is issued by a state department of agriculture must accompany the application (see 447).

.15 **Foreign Publications.** An application for a publication which seeks authorization under 422.5 must be filed on Form 3501–A, *Application to Mail Publications at Second-Class Rates,* at the post office where the mailings are to be made. All information requested on the form must be made available by the publisher or the publisher's agent for verification (see 447).

.16 **News Agents.** A news agent must file application Form 3501–A before being considered for authorization to mail at the second-class rates. All information requested on the form must be provided. The application must be filed at the post office where mailings are to be made (see 447).

441.2 Granting or Denying Applications

.21 **Responsibility.** The Director, Office of Mail Classification, Rates and Classification Department, USPS Headquarters, rules on all applications for second-class mail privileges.

.22 **Granting an Application.** If the Director grants an application for original entry, the Director will notify the postmaster at the office where the application was filed, and the postmaster will notify the applicant. Before taking action on an application, the Director may ask the publisher for additional information or evidence to complete or clarify the application. The publisher's failure to furnish such information is sufficient grounds to deny the application. Approval of an application to mail at second-class rates does not represent a determination by the Postal Service that a publication is mailable pursuant to 39 U.S.C., section 3001(a); and 18 U.S.C., sections 1461 and 1463. (See *Blount* v. *Rizzi*, 400 U.S. 410(1971).)

.23 **Denying an Application.** If the Director denies an application for original entry, the Director will notify the publisher specifying the reasons for the denial. The denial becomes effective 15 days from receipt of the notice by the publisher unless an appeal is filed with the Docket Clerk, U.S. Postal Service, Washington, DC 20260, in accordance with the provisions of 39 CFR Part 954, *Rules of Practice in Proceedings Relative to the Denial, Suspension, or Revocation of Second-Class Mail Privileges.* A copy of the *Rules* will be included with any notice of denial.

441.3 Mailing While Application Pending

.31 **General.** A publisher or news agent may not mail at second-class rates until the application for second-class mail privileges is approved by the Director, Office of Mail Classification, Rates and Classification Department, USPS Headquarters, Washington, DC. The postmaster may not accept mailings of a publication at the second-class rates for which an original entry application is pending until written authorization is received from the Director, Office of Mail Classification. Postage at the applicable first-, third-, or fourth-class rates must be paid while the application is pending. *Exception:* If the publication is authorized to mail at controlled circulation rates, the publisher may continue to pay controlled circulation postage while the second-class application for the publication is pending.

.32 **Record of Postage Paid.** If controlled circulation or third- or fourth-class postage is paid through a trust account, the postmaster will keep a record of such mailings on Form 3503, *Record of Deposits Made While Second-Class or Controlled Circulation Application Is Pending.* No record will be kept on Form 3503 if postage is paid at first-class rates or if postage is not paid through a trust account.

.33 **Refund.** If an authorization for second-class mail privileges is issued and a record of the postage paid has been kept (see 441.32), the postmaster will be instructed to refund to the publisher the postage paid at controlled circulation or third- or fourth-class rates in excess of the second-class rate since the effective date of the authorization.

Note: No refunds will be made:

a. If the application is denied;

b. If postage was paid at first-class rates; or

c. For the period prior to the effective date of the authorization.

441.4 Effective Date.

The effective date of the original entry authorization is the date of the application, if the publication was eligible for second-class mail privileges on that date, or the date of eligibility, if the publication became eligible after the date of application.

441.5 Revocation or Suspension of Second-Class Privileges

.51 **General.** The Postal Service will revoke the entry of a publication as second-class mail whenever it finds, after a hearing, that the publication is no longer entitled to be entered as second-class mail.

.52 **Initial Determination and Appeal.** The Director, Office of Mail Classification, Rates and Classification Department, USPS Headquarters, makes the initial determination concerning the suspension or revocation of a second-class entry subject to an appeal and hearing at the request of the publisher. The Director may ask a publisher from time to time to submit information bearing on the publisher's right to retain a second-class entry for the publication. When the Director determines that a publication is no longer entitled to second-class entry, he issues a ruling of suspension or revocation to the publisher at the last known address of the office of publication, stating the reasons for this ruling. The ruling becomes effective 15 days from receipt of the notice by the publisher unless an appeal is filed with the Docket Clerk, U.S. Postal Service, Washington, DC

20260, in accordance with the provisions of 39 CFR Part 954, *Rules of Practice in Proceedings Relative to the Denial, Suspension, or Revocation of Second-Class Mail Privileges.* A copy of the *Rules* will be included with any notice of revocation or suspension.

.53 Procedures. A copy of the procedures governing administrative appeals and hearings relative to the denial, suspension, or revocation of second-class entry may be obtained from the Director, Office of Mail Classification, Rates and Classification Department, Washington, DC 20260.

442 Additional Entry Applications

442.1 Application Procedure. A written request for an additional entry must be filed by the publisher at the post office where the publication has original second-class entry. A form is not provided for an additional entry application. The request may accompany the application for original entry or be filed at a later time. The request must include the following information:

a. Name of publication;

b. Frequency of issue;

c. Name of place where publication is printed;

d. Name of the additional entry post office;

e. Approximate number and weight of copies to be mailed at the additional entry post office; and

f. Specific geographic area to be served from the additional entry office. This area must include the entire local delivery area of the additional entry office.

442.2 Restrictions

.21 Same County. An additional entry will only be authorized at a post office located in the same county in which the office of original entry is located if the publication is entirely or partly produced or prepared for mailing at the additional entry office (see 445 for application for exceptional dispatch).

.22 Transportation Restrictions. An additional entry will be authorized only at a post office served by transportation facilities which will enable the mailings to be effectively and economically handled on postal transportation patterns.

442.3 Granting or Denying Applications

.31 Responsibility. The Director, Office of Mail Classification, Rates and Classification Department, USPS Headquarters, rules on all additional entry applications.

.32 Granting an Application. If the Director grants the application, he notifies the applicant and the postmasters at the original and additional entry offices. Before taking action on an application, the Director may ask the publisher for additional information or evidence to complete or clarify the application. The publisher's failure to furnish such information is sufficient grounds to deny the application.

.33 Denying an Application. If the Director denies an application for additional entry, he notifies the publisher specifying the reasons for the denial. The denial becomes effective 15 days from receipt of the notice by the publisher unless the publisher files an appeal with the Assistant Postmaster General, Rates and Classification Department, USPS Headquarters, Washington, DC 20260, who will issue the final agency decision.

443 Applications to Mail at Special Second-Class Rates

443.1 General Application Procedures. A publisher may apply for permission to mail at the special rates in 410. The organizations eligible for these special rates are described in 423. A written request for special rates must be filed by the publisher at the post office where the publication has original second-class entry. The request may be filed jointly with the application for original entry, filed separately at the office of application while the application is pending, or filed separately at the office of original entry after a publication has been granted second-class mail privileges.

443.2 Specific Application Procedures

.21 Special Nonprofit Rate. A nonprofit organization or association (as described in 423.1) may apply to the postmaster for the special nonprofit rates. It must submit evidence to establish its nonprofit status and to show that it comes within one of the qualifying categories of 423.1.

.22 Classroom Rate. A publisher of a religious, educational, or scientific publication designed for use in school classrooms or in religious instruction classes (as described in 423.2) may apply to the postmaster for the classroom rate. The publisher must submit evidence that the publication qualifies for this rate.

.23 Science of Agriculture Rate. A publisher of a publication designed to promote the science of agriculture may apply to the postmaster for the special zones 1 and 2 advertising rate described in 423.3. The publisher must submit evidence that the publication qualifies for the science of agriculture rate.

443.3 Granting or Denying Applications

.31 Responsibility. The Director, Office of Mail Classification, Rates and Classification Department, USPS Headquarters, rules on all special nonprofit, classroom, and science of agriculture rate applications.

.32 Granting an Application. If the Director grants the application, he notifies the postmaster at the original entry office who then notifies the applicant and any additional entry offices. Before taking action on an application, the Director may ask the publisher for additional information or evidence to complete or clarify the application. The publisher's failure to furnish such information is sufficient grounds for denying the application.

.33 Denying an Application. If the Director denies an application for special nonprofit, classroom, or science of agriculture rate, the Director will notify the publisher specifying the reasons for the denial. The denial becomes effective 15 days from receipt of the notice by the publisher unless the publisher files an appeal with the Assistant Postmaster General, Rates and Classification Department, USPS Headquarters, Washington, DC 20260, who will issue the final agency decision.

443.4 Mailing While Application Pending

.41 Application for a Publication Already Authorized Second-Class Entry

.411 General. A publisher or news agent may not mail at the special nonprofit, classroom, or science of agriculture rates until the application for such privileges is approved by the Director, Office of Mail Classification, Rates and Classification Department, USPS Headquarters, Washington, D.C. (see 443.3). The postmaster may not accept mailings of a publication at the special rates for which an application is pending until written authorization is received from the Director, Office of Mail Classification. Postage at the regular second-class rate must be paid while the special rate application is pending.

.412 Record of Postage Paid. The postmaster will keep an accounting of the difference between the regular rate postage paid and the applicable postage at the special rate for which an application is pending.

.413 Refund. If an authorization for special second-class mail privileges is issued, the postmaster will be instructed to refund to the publisher the postage paid at the regular second-class rates in excess of the applicable special rate

since the effective date of the authorization.

Note: No refunds will be made:

a. If the application is denied; or

b. For the period prior to the effective date of the authorization.

.42 Applications for Original Entry and Special Rate Entry Filed Simultaneously

.421 General. A publisher or news agent may not mail at second-class, special nonprofit, classroom, or science or agriculture rates until the applications for such privileges are approved by the Director, Office of Mail Classification, Rates and Classification Department, USPS Headquarters, Washington, D.C. (441.2, 443.3). The postmaster may not accept mailings of a publication at any of these second-class rates for which an entry application is pending until written authorization is received from the Director, Office of Mail Classification. Postage at the applicable first-, third-, or fourth-class rates must be paid while the applications are pending. *Exception:* If the publication is authorized to mail at controlled circulation rates, the publisher may continue to pay controlled circulation postage while the second-class applications for the publication are pending.

.422 Record of Postage Paid. If controlled circulation or third- or fourth-class postage is paid through a trust account, the postmaster will keep a record of such mailings on Form 3503, *Record of Deposits Made While Second-Class or Controlled Circulation Application Is Pending.* No record will be kept on Form 3503 if postage is paid at first-class rates or if postage is not paid through a trust account.

.423 Refund. If an authorization for second-class original entry, and for a special rate entry, if applicable, is issued and a record of the postage paid has been kept (see 443.422), the postmaster will be instructed to refund to the publisher the postage paid at controlled circulation or third- or fourth-class rates in excess of the authorized rate since the effective date of the authorization.

Note: No refunds will be made:

a. If the application is denied;

b. If postage was paid at first-class rates; or

c. For the period prior to the effective date of the authorization.

.43 Effective Date. The effective date of a second-class entry authorization is the date of the application for the entry, if the publication was eligible for the applicable entry on that date, or the date of eligibility, if the publication became eligible after the date of application.

443.5 Appeals. A copy of the procedures governing administrative appeals and hearings relative to the denial, suspension, or revocation of second-class entry may be obtained from the Director, Office of Mail Classification, Rates and Classification Department, USPS Headquarters, Washington, DC 20260.

444 Application for Reentry

444.1 Form 3510. An application for reentry must be filed on Form 3510, *Application for Reentry of Second-Class Publication,* whenever the name, frequency of issuance, location of the known office of publication, or qualification category (see 422) is changed. When the name or frequency of issuance of a publication is changed, a Form 3510 must be filed at the post office of original entry with two copies of the publication showing the new name or frequency. When the location of the known office of publication is changed, a Form 3510 must be filed at the new mailing office, with two copies of the publication showing the name of the new office as the known office of publication. A reentry application need not be filed if the known office of publication is moved to a location served by the same post office. An application for reentry is not required when only the ownership of a publication is changed unless the change disqualifies the publication for an entry which was authorized under 422.3.

444.2 Changing Qualification Categories

.21 General to Institutions and Societies. When a publication authorized under 422.2 wishes to change its authorization to 422.3, the publisher must file a Form 3510 and Form 3502, Application for *Second-Class Mail Privileges* (yellow form), at the office of original entry with accompanying evidence to establish that the publication is actually issued by one of the institutions and societies described in 422.3.

.22 Institutions and Societies to General. When a publication authorized under 422.3 wishes to change its authorization to 422.2, the publisher must submit Form 3510 and Form 3502, *Application for Second-Class Mail Privileges* (pink form), at the office of original entry. The postmaster will verify the circulation records of the publisher and complete the application to determine whether the publication meets the paid circulation requirements of 422.22.

444.3 General Advertising. When a publication authorized under 422.3 with no provision for general advertising wishes to be authorized to carry general advertising, the publisher must file Forms 3510 and 3502, with all circulation data completed, at the office of original entry. The postmaster will verify the publisher's records.

444.4 Acceptance After the Application is Filed. Copies of a second-class publication will be accepted for mailing at the second-class postage rates while the application for reentry is pending.

444.5 Granting or Denying an Application

.51 Responsibility. The Director, Office of Mail Classification, Rates and Classification Department, USPS Headquarters, rules on all reentry applications.

.52 Granting an Application. If the Director grants the application, he notifies the postmaster at the original entry office who then notifies the applicant and any additional entry offices. Before taking action on an application, the Director may ask the publisher for additional information or evidence to complete or clarify the application. The publisher's failure to furnish such information is sufficient grounds for denying the application.

.53 Denying an Application. If the Director denies a reentry application, he notifies the publisher specifying the reasons for the denial. The denial becomes effective 15 days from receipt of the notice by the publisher, unless the publisher files an appeal. Appeals concerning changes of name, frequency, or known office of publication are filed with the Assistant Postmaster General, Rates and Classification Department, USPS Headquarters, Washington, DC 20260, who issues the final agency decision. Appeals concerning qualification category changes are made in accordance with 441.23.

445 Application for Exceptional Dispatch

445.1 General. The Postmaster of an entry post office may authorize a publisher to deliver copies of a second-class publication, at the publisher's own expense and risk, from the post office of original entry or post office of additional entry to other post offices. This provision is intended for short haul local distributions and is not to be used to circumvent additional entry requirements.

445.2 Application. The publisher must file an application for such *exceptional dispatch* at the office of original or additional entry where the postage is paid on the copies to be transported. The application must fully explain the proposed exceptional dispatch and may be filed jointly with applications for original entry, reentry, or special rates, or separately. A form is not provided for this application.

445.3 Approval or Denial. The postmaster at the office of original or additional entry will approve or deny the application on the basis of whether the requested exceptional dispatch will improve service and not add to USPS costs. This postmaster will notify other post offices concerned and the sectional center manager of the approved arrangements and include a list detailing how the sacks or outside bundles will be labeled, the mode of dispatch, arrival particulars, and the approximate total number of copies. Copies will not be accepted at another office directly from the publisher until the postmaster at the entry office where postage will be paid has made proper notification as provided above.

445.4 Verification. Upon request by the entry office, the accepting office will verify the number of copies received directly from the publisher. The entry office request will be made at least once every 6 months and include the issue to be verified. The results of this verification and any noticeable change in the number of copies received at other times will be immediately reported to the entry office where postage is paid. Denial of an application for exceptional dispatch may be appealed to the Director, Office of Mail Classification, Rates and Classification Department, USPS Headquarters, Washington, DC 20260 who will issue the final agency ruling.

446 Revocation of Additional Entry, Special Second-Class Privileges, Reentry, and Exceptional Dispatch. The Director, Office of Mail Classification, Rates and Classification Department, USPS Headquarters, shall revoke an authorization for additional entry, special second-class privileges or exceptional dispatch whenever the Director finds that a publication is no longer entitled to such authorization. Whenever the Director revokes any such authorization, the Director will notify the publisher specifying the reasons for the revocation. The revocation becomes effective 15 days from receipt of the notice by the publisher unless an appeal is filed. Appeals concerning authorization to mail at a second-class rate must be made in accordance with 441.23. All other appeals must be filed with the Assistant Postmaster General, Rates and Classification Department, USPS Headquarters, Washington, DC 20260, who will issue the final agency decision.

447 Maintenance and Verification of Publisher Records

447.1 Eligibility Records. The publisher must maintain records adequate to substantiate the information required on Form 3501, *Application for Second-Class Mail Privileges* (pink form), (see Exhibit 447), or any other form required to confirm eligibility for entry of the publications at second-class, special nonprofit, classroom, or science of agriculture rates. Where applicable, the records must be adequate to establish that the publication is not designed primarily for free circulation or circulation at nominal rates. If the publication is authorized to carry general advertising the publisher must maintain a list of legitimate subscribers.

447.2 Information Requirements. Records must be available from which the Postal Service can determine:

a. The number of copies printed;

b. The manner of distribution and disposition of all copies;

c. The accuracy of the zone distribution shown on the mailing statement; and

d. The existence, for a publication authorized to carry general advertising, of a list of legitimate subscribers who have paid more than a nominal subscription price.

447.3 Types of Records. The following are examples of the types of records a publisher should maintain:

a. Print orders.

b. Invoices showing the total number of copies printed.

c. Individual and bulk orders for subscriptions and samples.

d. Newstand sales and returns.

e. Stubs or copies of receipts issued.

f. Vending machine sales and returns.

g. Sales records and returns for over the counter sales.

h. Cash books, bank deposit receipts, or similar records.

i. Records of copies of the publication destroyed.

447.4 Verification Requirements. Postmasters of original entry offices will review and verify publisher's records on a periodic basis and whenever evidence indicates the publication may be ineligible for second-class entry. The primary objective is to confirm that the number of copies mailed to each zone is accurately shown on mailing statements, and that the proper postage is being paid. Another objective is to verify that any second-class publications authorized to carry general advertising meet the applicable circulation and subscriber requirements of 422. Publishers must make records available, as necessary, to verify this information.

447.5 Verification Procedures

.51 Verification of the publisher's records may be done by Postal Service audit or by certain independent audit bureaus. The Postal Service currently has agreements with several audit bureaus under which it accepts their audits as meeting the verification requirements. The audit procedures used by these audit bureaus are essentially the same as those followed by the Postal Service.

.52 Publishers who desire to have verifications performed by one of these independent audit bureaus should make their request directly to the audit bureau. The audit bureau will then coordinate the audit through Postal Service Headquarters. The Office of Mail Classification will advise postmasters of any publications having original entry at their offices which will be audited by an independent audit bureau. This notification authorizes the postmaster to forego annual verfication of those publications for the year verified by the audit bureau.

447.6 Distribution Records for Presort Levels B, C, and E. See 464.6

448 Statement of Ownership, Management, and Circulation

448.1 Filing Requirements. All publishers of publications having second-class mailing privileges, including publishers of foreign publications accepted at second-class rates (see 422.5), must file on or before the first day of October of each year, a Form 3526, *Statement of Ownership, Management, and Circulation*, in duplicate, at the post office where the original second-class permit is authorized.

448.2 Information Required. The information provided on Form 3526 must be sufficient to determine whether the publication meets the standards for second-class mail privileges. This

includes, but is not limited to the following:

a. The identity of the editor, managing editor, publishers, and owners;

b. The identity of the corporation and stockholders thereof, if the publication is owned by a corporation;

c. The identity of any further corporations, and the stockholders thereof, which own at least 25 percent of the stock of a corporation owning the publication;

d. The identity of known bondholders, mortgagees, and other security holders; and

e. The extent and nature of the circulation of the publication, including, but not limited to, the number of copies distributed, the methods of distribution, and the extent to which such circulation is paid in whole or in part.

Note: The names of persons owning less than one percent of the total amount of stocks, bonds, mortgages, or other securities need not be reported.

448.3 Publication Requirements

.31 General Publications. Each owner of a publication having second-class mail privileges under 422.2 (*General Publications*) must publish the complete statement of ownership, containing all information required by Form 3526, in the second issue thereafter of the publication to which it relates. This may be, but is not required to be, a reproduction of the Form 3526 submitted.

.32 Other Publications. Publications entered under the provisions of 422.3 (*Publications of Institutions and Societies*), 422.4 (*Publications Issued by State Departments of Agriculture*), or 422.5 (*Foreign Publications*) need not publish a statement of ownership.

448.4 Other Forms Required. Form 15, *Second-Class Publisher's Statement of Number of Copies,* and, if applicable, Form 15E, *Second-Class Publication, Foreign Destinations-Postage Affixed,* must also be completed and filed for the mailings for which a Form 3526 was prepared, if the mailings are made at a post office designated in the Revenue/Cost Analysis System, whether the office is an original or additional entry office. Completion of Forms 15 and 15E is not required for publications whose application for second-class original entry is pending.

BILLING CODE 7710-12-M

U. S. POSTAL SERVICE

APPLICATION FOR SECOND-CLASS MAIL PRIVILEGES

SECTION I — TO BE COMPLETED BY APPLICANT

1. TITLE OF PUBLICATION

2. FULL NAME OF PUBLISHER

3. FULL NAME OF OWNER

4. IF OWNED BY A FIRM, GIVE THE NAME OF THE FIRM AND THE NAME OF EACH MEMBER THEREOF. IF OWNED BY A CORPORATION, GIVE THE NAME OF EACH OWNER OR HOLDER OF 1 PERCENT OR MORE OF THE STOCK.

5. LOCATION OF THE KNOWN OFFICE OF PUBLICATION *(Street, city, county, State and ZIP code)*

6. LOCATION OF THE HEADQUARTERS OR GENERAL BUSINESS OFFICES OF THE PUBLISHERS *(Not printers)*

7. ANNUAL SUBSCRIPTION PRICE	8a. FREQUENCY OF ISSUE	8b. NO. ISSUES PER YEAR	9. NUMBER OF ISSUES WHICH HAVE BEEN PUBLISHED

10. ARE ANY OF THE OWNERS OR STOCKHOLDERS INTERESTED FINANCIALLY IN ANY BUSINESS OR TRADE REPRESENTED BY THE PUBLICATION? *(Check one)* IF SO, WHAT IS THE INTEREST?

☐ YES ☐ NO

11. HAVE ANY OF THE PERSONS OR CONCERNS WHICH ADVERTISE IN THE PUBLICATION ANY INTEREST THEREIN? *(Check one)* IF SO, WHAT IS THE INTEREST?

☐ YES ☐ NO

12. IS MORE THAN ONE COPY OF EACH ISSUE FURNISHED TO ANY ONE ADVERTISER THEREIN? *(Check one)* IF SO, STATE THE NUMBER OF COPIES FURNISHED AND THE REASONS THEREFOR.

☐ YES ☐ NO

13. *I certify that* the statements made by me above and on the reverse of this application are correct and complete. Items 1 through 12 and 19 through 36 have been completed by me. Penalty for false evidence is up to $500. (Sec 1722, 18 USC)

a. SIGNATURE	b. TITLE	c. DATE SIGNED

SECTION II — TO BE COMPLETED BY POSTMASTERS

14. DATE OF REPORT	15. DATE OF FIRST MAILING UNDER DEPOSITS AFTER APPLICATION WAS FILED	16. AMOUNT OF APPLICATION FEE PAID

17. POST OFFICE ADDRESS AND TELEPHONE NUMBER

18. LIST AND DESCRIBE PUBLISHER'S RECORDS CHECKED. *(Specify exactly what records were reviewed.)*

POSTMASTER *(Signature)*

PS Form 3501
July 1978

Exhibit 447(p.1)—Form 3501, Application For Second-Class Mail Privileges

SECTION III – SUBSCRIPTION DATA			
PUBLISHER TO COMPLETE COLUMNS (A) AND (B)			POSTMASTER TO COMPLETE COLUMN (C)
	ITEMS (A)	NUMBER (B)	NUMBER (C)
19.	TOTAL NUMBER COPIES PRINTED OF THE ISSUE ACCOMPANYING THIS APPLICATION → ISSUE DATE _____ 19 ____		
20.	SUBSCRIPTIONS RECEIVED BY THE PUBLISHER AT THE FULL ADVERTISED SUBSCRIPTION PRICE DIRECTLY FROM THE PERSONS TO WHOM THE PUBLICATION IS SENT		
21.	SUBSCRIPTIONS RECEIVED UNDER OFFER OF A PREMIUM OR OTHER REDUCTION ARRANGEMENT		
	DESCRIPTION OF PREMIUM ITEM OR REDUCTION ARRANGEMENT		
	COST PER PREMIUM ITEM TO PUBLISHER $ / RETAIL VALUE $ / VALUE REPRESENTED $		
22.	SUBSCRIPTIONS PAID FOR WITH DUES OR CONTRIBUTIONS (Attach printed copies of forms used for taking these subscriptions)		
23.	SUBSCRIPTIONS RECEIVED THROUGH AGENTS		
	PRICE PAID BY SUBSCRIBER $		
24.	COPIES FURNISHED ACTUAL ADVERTISERS IN THIS ISSUE TO PROVE INSERTION OF ADVERTISEMENTS		
25.	COPIES SENT AS EXCHANGES WITH OTHER PUBLICATIONS, ONE COPY FOR ANOTHER		
26.	COPIES SENT TO PERSONS WHOSE SUBSCRIPTIONS WERE PAID FOR BY OTHERS (Attach separate sheet showing: (1) who paid for these subscriptions, (2) the price paid, and (3) the purpose for which the copies were sent)		
27.	SINGLE COPIES SOLD OVER PUBLISHER'S COUNTER		
28.	PER COPY PRICE PAID BY NEWSBOYS $ / COPIES SOLD BY NEWSBOYS →		
29.	COPIES PURCHASED BY NEWS AGENTS FOR RESALE WITHOUT RETURN PRIVILEGE		
	PER COPY PRICE PAID BY NEWS AGENTS $		
30.	COPIES CONSIGNED TO NEWS AGENTS WITH RETURN PRIVILEGE / NUMBER OF COPIES SOLD BY NEWS AGENTS →		
	NUMBER RETURNED TO PUBLISHER / PER COPY PRICE PAID BY NEWS AGENT		
31.	COPIES PURCHASED IN BULK BY OTHER THAN NEWS AGENTS OR NEWSBOYS (Attach separate sheet showing: (1) who purchased these copies, (2) the price paid, and (3) the purpose for which the copies were purchased)		
32.	COPIES SENT IN FULFILLMENT OF SUBSCRIPTIONS RECEIVED IN A MANNER OTHER THAN COVERED ABOVE		
	THESE SUBSCRIPTIONS WERE OBTAINED IN THE FOLLOWING MANNER:		
33.	TOTAL PAID CIRCULATION		
34.	SUBSCRIPTIONS INCLUDED IN ITEMS 20 THROUGH 32 INCLUSIVE, WHICH EXPIRED MORE THAN 6 MONTHS AGO AND WHICH HAVE NOT BEEN EXPRESSLY RENEWED		
35.	TOTAL SAMPLE COPIES DISTRIBUTED (IN THE MAILS OR OTHERWISE)		
36.	DESCRIBE THE DISPOSITION OF THE REMAINING COPIES HERE AND ENTER AMOUNTS REMAINING IN COLUMN (B)		

Exhibit 447 (p.2)—Form 3501, Application For Second-Class Mail Privileges

BILLING CODE 7710-12-C

448.5 Failure to Submit Required Information or Forms. A publication which fails to comply with the requirements of 448.1 through 448.4 within 10 days after notice by certified mail of the failure, may not be mailed at the second-class rates until it has come into compliance.

449 Fees

The appropriate fees (see 412.1) must accompany applications for second-class original or additional entry, reentry, or for registration as a news agent. If an application is not approved, no part of the fee or fees (as appropriate) is returned to the applicant.

450 Physical Limitations

There are no physical limitations other than those contained in 127 and 421 for second-class publications addressed to domestic destinations. Publication 42, *International Mail,* prescribes weight limits for mailings to foreign destinations.

460 Preparation Requirements

461 Identification Statements in Copies

461.1 Information Required. Copies of publications entered as second-class mail and copies of publications awaiting approval of their application for second-class mail privileges must have an identification statement conspicuously shown in type no smaller than can be easily read: (1) on one of the first five pages (preferably in the masthead) or (2) in the masthead on the editorial page (provided the location of the editorial page is shown on the front page of the publication in the table of contents). The identification statement must contain all of the following items:

a. Name of Publication and Publication Number. The publication number includes an alpha prefix and is to be within parentheses immediately following or below the name of the publication; for example, *THE WEEKLY JOURNAL* (ISSN 9876–543X) or *THE CIVIC BULLETIN* (USPS 876–690). The publication number will be furnished by the Office of Mail Classification, Rates and Classification Department, USPS Headquarters, and must be included within 90 days of the notification. The publication number may be omitted if it appears on the front/cover page.

b. Date of Issue. The date of issue may be omitted if it appears on the front/cover page.

c. Statement of Frequency

d. Issue Number. Every issue of each publication must be numbered consecutively. The consecutive numbering of published issues may not be broken by assigning numbers to issues unavoidably omitted. The issue number may be omitted if it appears on the front/cover page.

e. Subscription Price. If the publication has one.

f. Name and Address of Known Office of Publication. Including street number, street name, and ZIP Code. The street name and number are optional if there is no letter carrier service. *The known office of publication* must be clearly distinguishable from the names of other offices of the publication. If there is no United States Post Office at the place where published (foreign publication) the name of the post office where mailed must be shown as the office of publication.

g. Second-Class Imprint. Which reads "Second-Class Postage Paid at....." If a publication is mailed at two or more offices, the imprint must read "Second-Class Postage Paid at.....and at additional mailing offices".

h. Notice of Pending Application. If copies are mailed while an application is pending, a notice must be included which reads "Application To Mail At Second-Class Postage Rates Is Pending At.....".

i. Mailing Address For Change of Address Orders. A statement, in normal text type of the publication, indicating where change of address orders are to be sent, which reads: "POSTMASTER: Send address changes to (Publication name and mailing address)". See 463.4 regarding publications which are wrapped.

461.2 Sample Format. In the example below the publisher's *known office of publication* is located in Washington, DC, where circulation records must be made available for postal examination. The fulfillment office is located at Boulder, Colorado.

Example: The following is an example of an appropriate identification statement format:

"*THE DAILY TIMES* (ISSN 7132–698X) is published daily except Sundays and holidays for $28 per year by Wright News, Co., 123 Main Avenue, Washington, DC 20024. Second-class postage paid at Washington, DC and additional mailing offices. POSTMASTER: Send address changes to *THE DAILY TIMES,* P.O. Box 4, Boulder, CO 80302."

462 Preparation

462.1 Folding. Publishers are encouraged to fold publications to a size not larger than 11¾ by 14½ inches, when practical. A quarter fold in newspaper size publications or a one-half fold in tabloid or smaller publications should normally achieve these dimensions. *Publications should not be rolled.*

462.2 Wrapping

.21 Individually addressed copies not wrapped or tied together as a package by the mailer as required by 464.1 must be enclosed in wrappers or envelopes.

.22 All single copies addressed to Army or Air Force post offices must be enclosed in wrappers or envelopes.

.23 Publishers are encouraged to place publications of small size or of flimsy nature in envelopes.

.24 White or other light-colored paper must be used for wrapping. Old newspapers may not be used.

.25 Second-class mail must be prepared so that it can be easily examined. Mailing of publications at second-class rates of postage is consent by the sender to postal inspection of the contents whether loose, or inserted in envelopes, wrappers, or other covers. Mailers who want to insure that publications are not opened for postal inspection must pay first-class rates of postage, and should plainly mark *First-Class* or some similar endorsement on the envelope, wrapper, or cover.

462.3 Addressing

.31 Each piece including the top copy of a firm package (see 464.11) must bear the name and address of the subscriber. The address must include the ZIP Code. *Exception*: the ZIP Code may be omitted from pieces bearing a simplified address in accordance with 122.41; pieces presorted and bundled by the mailer to city, rural, or highway contract carrier routes; and pieces presorted to five-digit ZIP Code destinations consisting of either a post office having one ZIP Code or the ZIP Code delivery unit in multi-ZIP coded post offices.

.32 The name of the post office and State should be the most prominent part of the address.

.33 All pieces should be addressed in a legible hand or plain type not smaller than 10 point. Black or other strongly contrasting ink should be used. Addresses should not be written in pencil.

.34 White or other light-colored paper must be used for address strips.

.35 Addresses, including address strips, must be placed in a visible position either on the wrapper or envelope or directly on the copies. When the address is placed on the wrapper, it must appear on a flat side and never on the fold.

.36 Addresses must be placed on the front or back cover so that they may be easily read. It is suggested they be

placed so that when the bound (or folded) edge is grasped in the right hand, the address should be along the bound edge or the top edge near the bound edge as illustrated in Exhibit 462.36.

463 Marking

463.1 Marking of Paid Reading Matter

.11 General. Editorial or other reading matter contained in publications entered as second-class mail and for publication of which a valuable consideration has been paid, accepted, or promised must be plainly marked *advertisement* by the publisher. Editors or publishers who print editorial or other reading matter for which they have been paid or promised a valuable consideration without plainly marking it *advertisement*, shall be subject to a fine of not more than $500. (18 U.S.C. 1734).

.12 More Than One Page. When a single item of paid editorial or other reading matter occupies more than one page it need only be marked *advertisement* on the first page.

.13 Included In a Statement. The word *advertisement* may be included as part of a statement which explains why the material is marked advertisement. However, such a statement must be prominent on the first page of the material and the word *advertisement* in the statement must be in bold or italicized print, or otherwise given emphasis so it can be plainly seen.

463.2 Notice of Entry. Sealed or unsealed envelopes used as wrappers and sealed covers must show a notice of entry in the upper right corner of the address area. The upper left corner must show the name of the publication followed immediately by the publication number furnished by the Office of Mail Classification, Rates and Classification Department, USPS Headquarters, and the mailing address to which undeliverable copies or change of address notices are to be sent. The publication number includes an alpha prefix and is to be within parentheses; for example, *THE NATIONAL WEEKLY* (ISSN 9876-543X) or *THE COMMUNITY JOURNAL* (USPS 123-456). See 461.1f and 463.4 for additional instructions. An alternative to printing these required endorsements on the wrapper is to print them directly on the outside of the publication, provided they can be readily recognized and easily read when the wrapper is in place. This permits the use of clear plastic wrappers and opaque sleeves which only partially cover the publication.

463.3 Return Postage Guaranteed. Publishers who desire return postage guaranteed service must mark their publications as described in 493.

463.4 Requests for Change of Address. Publishers may place requests for change of address information from subscribers on wrappers or envelopes containing copies of second-class publications. A statement reading substantially as follows may be printed on the wrappers or envelopes:

Moving? Send the address label with your corrections to: (Name and address of publisher)

463.5 Publications Authorized Newspaper Treatment. Publications authorized newspaper treatment (see 432) may be endorsed (on the cover or wrapper) as follows: *Newspaper, Newspaper Treatment, Newspaper Handling,* or *Newsletter.* In addition, sacks containing these publications must be plainly labeled *Newspapers* or *News.*

464. Presort Requirements (See Exhibit 464)

464.1 Packaging Requirements

.11 Firm Packages. When there are two or more copies for the same address they must be made up into one package if only one piece rate is paid for the group. Affix blue label F (see 464.19). When there is more than one package sent to one address, mailers are allowed to include a package identification notice such as *1 of 4, 2 of 4,* etc., on the package wrapper, provided such endorsement does not interfere with the clarity of the address.

.12 5-Digit Packages. When there are six or more copies for the same 5-digit ZIP Code destination, they must be made up into 5-digit packages. Mailers are encouraged to, but are not required to, affix red label D.

BILLING CODE 7710-12-M

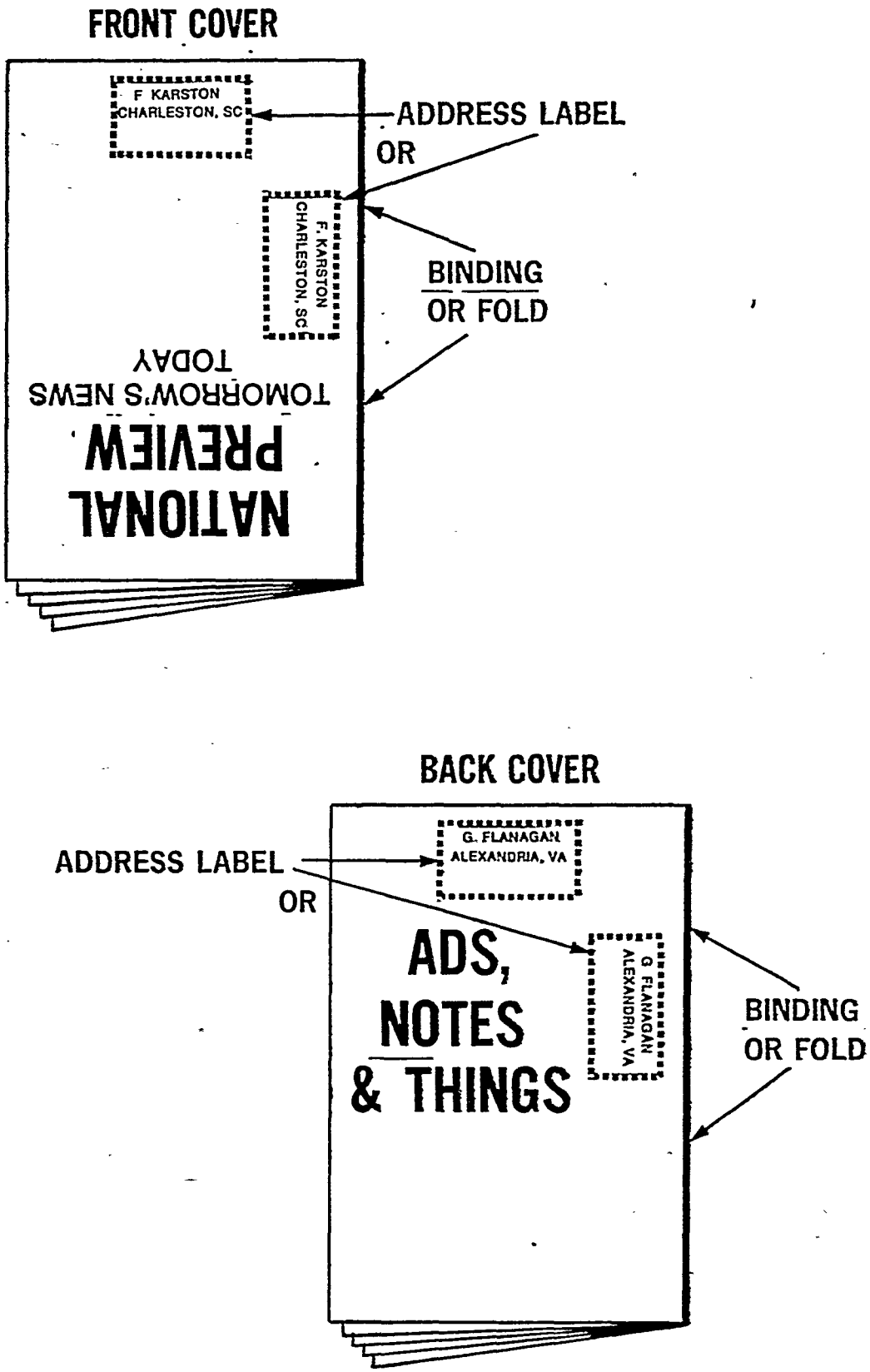

Exhibit 462.36—Placement of Address

BILLING CODE 7710-12-C

.13 **Loose Packing.** Management sectional center (MSC) managers may authorize loose packing of copies in full No. 3 sacks without bundling when all material in a sack goes to the same 5-digit ZIP Code. Copies must be placed to maintain orientation of the copies while in transit. Mailers desiring to loose pack copies must make requests through the post office of mailing. *Note: the terms loose pack* or *loose packing* refer to the placement of unbundled, unbound mail pieces in a receptacle such as a mail sack.

.14 **Mixed City Packages.** When there are six or more copies for the same multi-ZIP Coded post office remaining after the required 5-digit packages have been made, they must be made up into mixed city packages. Affix yellow label C.

.15 **Sectional Center Facility (SCF) Packages.** When there are six or more copies for post offices in the same SCF delivery area remaining after the required 5-digit or mixed city packages have been made, they must be made up into SCF packages. Afflix green label 3.

.16 **State Packages.** When there are six or more copies for a State remaining after the required 3-digit packages have been made, they must be made up into state packages. Affix orange label S. Individual copies in state packages must be wrapped in accordance with 462.2.

.17 **Mixed State Packages.** Copies remaining after all of the packages have been made-up as outlined above, must be made up into a mixed state package. Attach a mixed state white facing slip. Individual copies in mixed state packages must be wrapped in accordance with 462.2.

.18 **Facing.** All copies in a package must be faced the same way with an address visible on the top copy.

.19 **Package Labels.** Pressure sensitive package labels must be applied to the lower left corner of the address side of the top copy on letter size packages and next to the address on larger packages. Facing slips must be placed on the address side of the top copy in mixed state and foreign packages. Pressure sensitive labels and facing slips are available from post offices.

464.2 Sacking Requirements

.21 **General.** Except where bundling or palletzing is authorized (see 464.3 or 464.4), packages must be placed in sacks when matter addressed to the same 5-digit ZIP Code, the same 3-digit ZIP Code prefix, the same SCF delivery area, or the same state distribution center weighs 20 pounds or more or is 1,000 cubic inches or more volume. However, no more than 70 pounds may be placed in any sack.

.22 **5-Digit Sacks.** When there are 20 pounds or 1,000 cubic inches or material addressed to the same 5-digit destination, packages must be made up into 5-digit sacks. The sacks must be labeled in the following manner:

Line 1: City, & State and 5-digit Destination
Line 2: Contents (ORD P) or NEWS (See 463.5)
Line 3: Office of Mailing
Sample:

PHILADELPHIA PA 19118
ORD P
BOSTON MA

.23 **Mixed City Sacks.** When there are 20 pounds or 1000 cubic inches of material addressed to the same multi-ZIP Coded post office after making up 5-digit sacks, the packages must be made up into mixed city sacks. The sacks must be labeled in the following manner:

a. Mixed city with unique 3-digit ZIP Code prefix
Line 1: City, State and 3-Digit Prefix
Line 2: Contents
Line 3: Office of mailing
Sample:

PHILADELPHIA PA 191
ORD P
BOSTON MA

b. Mixed city without a unique 3-digit ZIP Code Prefix
Line 1: City, State and Lowest Zip Code
Line 2: Contents
Line 3: Office of mailing
Sample:

OAK LAWN FL 60453
NEWS
BOSTON MA

.24 **SCF Sacks.** When there are 20 pounds or 1,000 cubic inches of packages addressed to post offices in the same SCF delivery area after making up 5-digit or mixed city sacks, the packages must be made up into SCF sacks. The sacks must be labeled in the following manner:

Line 1: Name and State of SCF, principal 3-digit ZIP Code Prefix
Line 2: Contents
Line 3: Office of Mailing
Sample:

SCF PHILADELPHIA PA 190
ORD P
BOSTON MA

Note: A list of all SCF's, the first three digits of all ZIP Codes served by these facilities, and the principal 3-digit ZIP Code prefixes that are to be used on SCF sack labels is contained in Publication 65, *National ZIP Code and Post Office Directory.*

.25 **State Sacks.** When there are 20 pounds or 1,000 cubic inches of packages addressed to the same State remaining after SCF sacks have been prepared, the packages must be made up into state sacks. The sacks must be labeled in the following manner:

Line 1: Name of State Distribution Center for State of Destination
Line 2: Contents and State
Line 3: Office of Mailing
Sample:

DIS KANSAS CITY MO 640
ORD P MO
SAN FRANCISCO CA

.26 **Mixed State Sacks.** Packages remaining after state sacks have been prepared, must be made up into mixed state sacks. The sacks must be labeled in the following manner:

Line 1: Mixed States Distribution Location
Line 2: Contents
Line 3: Office of Mailing
Sample:

DIS CHICAGO IL 606
ORD P MIXED STATES
CHICAGO IL

464.3 Bundling Instead of Sacking

.31 **Regional Authorization**

.311 The Regional Postmaster General for the post office of mailing may authorize dispatch of second class mail in bundles outside of mail sacks if such preparation is beneficial to the Postal Service. The publisher must submit an application to the postmaster where the mail is to be deposited. The following information must be furnished with the application:

a. Name of publication and frequency of mailing;

b. Identity of post offices to which shipments will be made; and

c. Approximate quantity of copies and number of bundles to each office.

.312 The postmaster will foward the application to the Regional Postmaster General with a detailed explanation of the transportation and processing arrangements. The application will be reviewed by the General Manager, Logisitics Division and by others concerned in that region and in any other region which will process the mail in order to determine whether intermediate or destination offices are capable of receiving and processing the bundles without increasing overall processing costs. The Regional Postmaster General will notify the postmaster at the office where the mail is to be entered whether the application has been approved or, if not, the reason for denial. The postmaster will send notice of the decision to the mailer.

.32 Bundling Requirements. Mailers bundling instead of sacking publications must observe the following procedures:

a. Presort by ZIP code. Mailers must presort publications by ZIP Code separations as required by 464.1

b. Prepared Like Sacks. Bundles must be prepared on the same basis as sacks (see 464.2) and individual separations within a bundle must be appropriately wrapped or tied to maintain the identity of the separation. The number of bundles should not exceed the number of sacks which would otherwise be used in a mailing, except when those bundles are used in an approved palleted mailing. This may require bundling up to the 40 pound maximum when volume warrants and the mailing is not palletized.

c. Weight and Numbers. The weight of a bundle must not exceed 40 pounds. A bundle should weigh at least 20 pounds or be of at least 1,000 cubic inches of volume. Lesser quantities must be included in bundles for the next lower level of sortation.

d. Labeling. All bundles must be appropriately labeled on top to show destination and contents as required with sacks. Similarly, each separation within a bundle must be identified by labels in accordance with 464.19.

e. Machinable Mailings. Mailings must be machinable by Postal Service sack-sorting equipment unless they consist of publications intended only for local area delivery (same-3-digit ZIP Code prefix). It is the responsibility of the mailer to satisfy the Postal Service that mailings are machinable. This can be verified by having the mailing post office test process ten or more production bundles on two or more passes through a bulk mail center (BMC). Ordinarily, bundles require cross strapping and heavy-guage shrink or stretch wrap to insure their integrity in the mailstream.

f. Local Processing and Delivery. When second-class publications are entered for local processing and delivery (i.e. without being routed through a BMC), they need not meet the requirements of 464.32e. However, bundles must be securely bound to withstand handling without breakage or damage and to prevent injury to postal personnel or damage to mechanized sorting systems. If wire is used, it must have rounded edges and flat ends. Binding material must be applied at least once around the length and girth. The use of metal strapping is discouraged because of its possible hazards.

464.4 Palletizing Instead of Sacking

.41 Regional Authorization. The Regional Postmaster General for the post office of mailing may authorize the dispatch of second-class mail on pallets without mail sacks, if such preparation is benefical to the Postal Service. Applications for palletizing instead of sacking must be made and processed as prescribed for bunding in 464.31.

.42 Palletizing Requirements. Mailers palletizing instead of sacking publications must observe the following procedures:

a. Mailers must presort publications and prepare packages as prescribed in 464.1. The Regional Postmaster General may waive packaging requirements for 5-digit ZIP Code pallets when mailers effectively demonstrate that they will prepare pallets to remain intact to the destination.

b. Pallets must be made up as 5-digit ZIP Code, mixed city, SCF, state or mixed state pallets when the mail load to a destination is either 650 pounds or three-feet high. Pallets must not contain more than 2,000 pounds of mail or mail addressed to more than one zone.

c. Pallets must be labeled in the format described in 464.2. These labels must be as least five inches by nine inches in size with characters at least one inch high.

464.5 Copies for Military Post Offices Overseas

.51 Direct Packages. When more than one copy is addressed to one unit, APO, or Navy or Marine Corps address (see 122.8), the copies must be securely wrapped in packages or tied in bundles labeled for the military address.

.52 Mixed Packages. After all direct packages have been made, if there are more than five copies remaining for dispatch through any postal concentration center, they must be wrapped in packages or tied in bundles and labeled for the center.

.53 Direct Sacks. When there are a sufficient number of packages and bundles for one unit, APO, or Navy or Marine Corps address to fill approximately one-half of a No. 2 sack, a direct sack must be made. Direct sacks will not be opened at postal concentration centers. The sack should be labeled in the following manner:

Line 1: Postal Concentration Center Designation, City, State, 3-digit ZIP Code Prefix

Line 2: Contents, APO or FPO Designation and 5-digit ZIP Code

Line 3: Publication Title, Office of Mailer

Sample:

PCC NEW YORK NY 110
ORD P APO 09360
THE RECORDER NEW YORK NY

.54 Mixed Sacks. When the quantity is insufficient for a direct sack, but there are enough bundles or packages for dispatch through one postal concentration center to fill approximately one-half of a No. 2 sack, a sack must be made up for that center and labeled in the following manner:

Line 1: Postal Concentration Center Designation, City, State, 3-digit ZIP Code Prefix

Line 2: Contents, APO or FPO Designation for MAIL

Line 3: Publication Title, Office of Mailing

Sample:

PCC SAN FRANCISCO CA 962
ORD P APO MAIL
THE RECORDER NEW YORK NY

464.6 Preparing Out-Of-County Rated Pieces (Levels B, C, and E). Mailers using out-of-county per piece rates (regular rate and science of agriculture publications, see 411) must adhere to the following:

a. To qualify for the level B or level E piece rate, a piece must be presented in a sack addressed to a city having a unique 3-digit ZIP Code prefix, or a 5-digit ZIP Code destination, containing sufficient pieces to weigh at least 20 pounds or be of at least 1,000 cubic inches in volume.

b. To qualify for the level C piece rate, a piece must be presented in a sack addressed to a particular carrier route containing sufficient pieces to weigh at least 20 pounds or be of at least 1,000 cubic inches in volume.

c. Pieces presented in bundles instead of sacks, (see 464.3) may receive this lower rate providing they weigh at least 20 pounds or are of at least 1,000 cubic inches in volume.

d. One sack addressed to a city having a unique 3-digit ZIP Code prefix, or to a 5-digit ZIP Code destination containing less than 20 pounds or of less than 1,000 cubic inches in volume, may qualify for this lower per piece rate if it is part of a mailing which contains other substantially full sacks to the same ZIP Code destination. This allows for the overflow which cannot be efficiently put with previously sacked mail.

e. Mailers must be prepared to document or otherwise confirm the number of pieces mailed and paid for at levels B, C, and E piece rates. *Note:* This may be done in any of the following ways:

(1) By separating sacks paid at the various piece rates when they are presented for mailing, or

(2) By attaching to the mailing statement a list of the number of copies (and pieces) to each unique 3-digit prefix city, 5-digit destination, and carrier route for which level B, C, or E piece rates are being paid, or

(3) By maintaining records for each mailing which will confirm the number of pieces in unique 3-digit city, 5-digit, and carrier route sacks. The records must document the number of copies (and pieces) to each unique 3-digit city, 5-digit, and carrier route destination for which sacks are made up. A printout must be presented prior to the first mailing made under this arrangement. These records must be retained for at least two months.

f. The mailer must provide a copy of the record for a particular mailing, or portions of it, within 30 days of a request by the postmaster of the office of entry. Postmasters will advise the Region's Revenue Protection Program Manager of all publications being mailed under this arrangement. Acceptance units will maintain a list of publications authorized to mail under this arrangement.

g. More than one second-class publication may be combined to meet the 20 pound or 1,000 cubic inch per sack or bundle requirement for the Levels B, C, and E piece rates. To qualify for Levels B and C piece rates, at least 5,000 copies of each issue in the combined mailing must be mailed to destinations outside the county of publication. Listings and records provided by publishers in accordance with 464.6e must also document the number of combined pieces and copies of each publication mailed to each unique 3-digit city, 5-digit ZIP Code destination, and carrier route. The total number of consolidated mailing pieces for each level of presort is to be reported on the Form 3541 for one publication or on a separate Form 3541. A notation such as "per piece charge for consolidated copies of (*title*), (*title*), etc." must be included on the Form 3541 on which the piece rates are computed. The Forms 3541 used to compute pound-rate postage for the individual publications must include a notation as to the number of copies included in the consolidated mailing pieces, and where the piece rate computations can be found (i.e., (number) copies sent in consolidated bundles and reported on the Form 3541 for (*title*)).

BILLING CODE 7710-12-M

HOW TO PREPARE SECOND-CLASS MAIL

Pieces qualifying for the rate MUST be prepared in the following sequence:

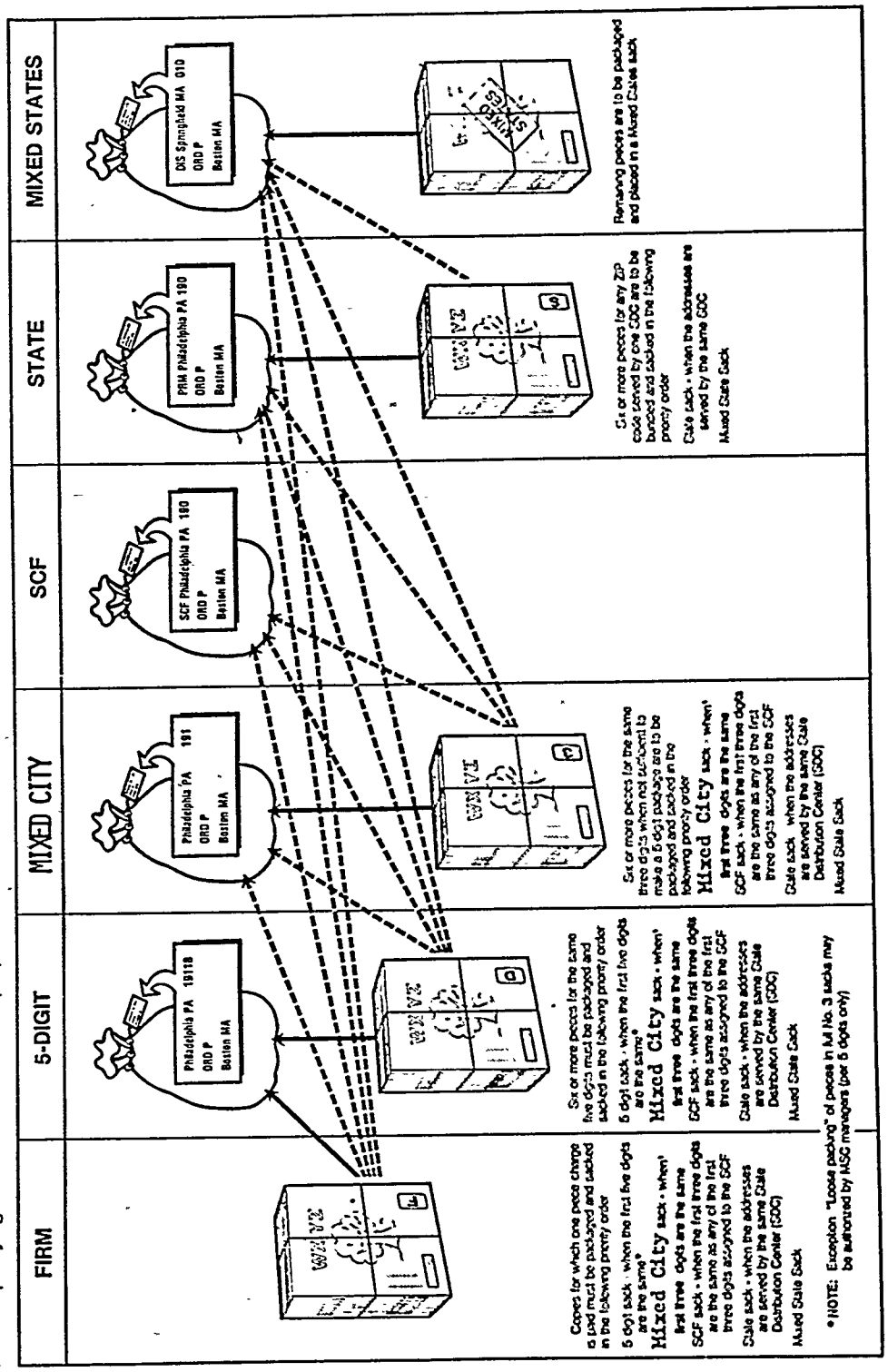

Exhibit 464

BILLING CODE 7710-12-C

470 Mailing

471 Who May Mail

Only publishers and registered news agents who have been authorized second-class mailing privileges may mail at the second-class rates, other than the transient rate. Postage at the transient rate (see 411.42) must be paid on all copies mailed by the general public.

472 Place of Mailing

Publishers and registered news agents may only mail at the second-class rates at post offices where an authorization for original entry, additional entry, or exceptional dispatch has been obtained. Mailings must be made between the times and at the locations designated by the postmaster of the office of mailing.

480 Payment of Postage

481 Payments in Advance of Dispatch

Postage must be fully prepaid before second-class mailings are dispatched. Payment must be made through an advance deposit account established at the post office of mailing. The post office will issue receipts for advance deposit account payments. *Exception:* The transient rate for noncommingled nonsubscribers' copies may be paid only by adhesive or meter stamps or by permit imprints (see 411.42)

482 Mailing Statement (See Exhibit 482)

482.1 Computing Postage. Second-class postage is computed on Form 3541, *Statement of Mailing Second-Class Publications.* These mailing statements must be submitted by the publisher with the first mailing of each issue, except that postmasters will, upon request, authorize publishers of publications which are regularly printed on sheets of uniform weight to submit one mailing statement at the end of each calendar month for mailings made during that month.

482.2 General Rule

.21 When to File. Publishers must submit a properly completed mailing statement on Form 3541 with the first mailing of each issue of the publication. A separate Form 3541 must be filed for each edition of the issue.

.22 Percentage of Advertising. The percentage of advertising to be entered on Form 3541 must be based on the marked copy submitted in accordance with 483.

.23 Determining Average Weight Per Copy. The average weight per copy includes the wrapping and binding materials and must be determined by the publisher as follows;

a. Select a reasonable number of copies so they can be expected to represent the *average* of those mailed. Wrap and bundle them in bundles equal to the *average* size of the bundles mailed.

b. Weigh these bundles.

c. Divide the bulk weight of the test copies by the number of test copies to obtain the average weight per copy in pounds. Record fractions of pounds to six decimal places.

.24 Copies of Previous and Current Issues Combined. When a reasonable number of copies of previous issues are included in a mailing of a current issue, they may be accepted and charged with postage on the basis of the percentages of advertising and nonadvertising material contained in the current issue. The issue forming the bulk of the mailing presented will be regarded as the current issue.

.25 Mailing While Application Pending. A publisher mailing under a trust account while a second-class application is pending (see 441.3) must submit Form 3541 with each mailing with the words *Pending Application* noted on the form. The form must contain all requested information, as well as a notation of the controlled circulation or third- or fourth-class postage placed in trust, and how that postage was computed. Form 3602, *Statement of Mailing With Permit Imprints,* 3602-PC, *Statement of Mailing-Bulk Rates,* or the back of Form 3541 may be used for this purpose.

482.3 Monthly Mailing Statement

.31 Authorization to Use. Postmasters may authorize publishers to submit Form 3541 at the end of the month for all issues mailed during the month, if all issues are printed on sheets of the same weight.

.32 When to File. The properly completed statement of Form 3541 must be submitted not later than 72 hours after the first mailing of the last issue mailed each month.

.33 Completion of Mailing Statement By Mailer

.331 Average Number of Copies. The average number of copies mailed per issue to each zone during the month must be shown on Form 3541. The publisher must determine this number by dividing the total number of copies mailed to each zone during the month by the total number of issues mailed. The month and year for which postage is being paid must be entered in the space provided for the date of mailing on Form 3541. The first and last issue dates for the month must also be entered.

.332 Percentage of Advertising. The percentage of advertising for all issues mailed during the calendar month must be entered on Form 3541. This is obtained as follows:

a. The publisher must maintain a record of the number of units of advertising space and the number of units of nonadvertising space in each issue, based on the marked copies submitted in accordance with 483.

b. Add the advertising units in each issue to determine the total advertising units in all of the issues.

c. Add the nonadvertising units in each issue to determine the total nonadvertising units in all of the issues.

d. Add the advertising and nonadvertising units to determine the total units in all of the issues.

e. Divide the total advertising units by the total units to determine the percentage of advertising.

f. Divide the total nonadvertising units by the total units to determine the percentage of nonadvertising.

.34 Computation of Postage By Post Office. Postage computations are made by the postmaster based on the combined weight of one copy of each issue mailed during a calendar month. This combined weight includes the wrapping and binding materials and must be obtained as follows:

a. The postmaster at the office of mailing will select one issue during the month for testing and verification purposes.

b. The average weight per copy of the selected issue is determined by the method described in 482.23.

c. The weight of one sheet is determined by dividing the average weight per copy by the number of sheets of the selected issue. Weights are recorded in fractions of a pound to six decimal places.

d. The total number of sheets is obtained by counting the sheets in each selected copy of each issue mailed during the month.

e. The combined weight of one copy from each issue mailed during the month is determined by multiplying the total number of sheets in the selected copies by the weight of one sheet. This result or amount is entered on Form 3541.

482.4 Key Rate

.41 Definition. The *key rate* is a simplified method of computing postage for publications subject to the advertising zone rates. It may be used where the circulation by zones is consistently stable, and when large volume mailings justify its use.

.42 Authority to Use. Postmasters may authorize publishers to use the key rate method of computing pound-rate postage when large mailings justify its use.

.43 Statements of Distribution

.431 Semi-Annual Statements. The publisher must submit twice each calendar year, at 6-month intervals, a Form 3541, showing the number of subscribers' copies of an issue mailed to each zone.

.432 Other Statements. The publisher must submit a Form 3541, showing the mailings to each zone at any time during the 6-month intervals when the volume of mailings to the zones varies, when there is an increase in the total number of copies, or when there is a postage rate change. When the Form 3541 is filed because of a rate change, the semi-annual statement need not be filed until six months after the filing of the rate change statement.

.433 Between Statements. During the 6-month period or other intervals, the publisher need not complete the lines for zones 1 to 8 on Form 3541. The publisher must enter only total zone mailings on the "Total Copies" lines.

.44 Computation

.441 When to Compute. A new key rate must be computed by the postmaster and used whenever a Form 3541 is submitted in accordance with 482.43.

.442 How to Compute. On the corresponding lines in Column B of Form 3541, enter the number of copies for each zone. Apply the appropriate pound rates shown in Column F to the number of copies for each zone and enter the postage for each zone in Column G. Divide the total zone postage in item 2, Column G, by the total number of copies in item 2, Column B to obtain the key rate, which should be carried to six decimal places. Apply the key rate only to the total weight of the advertising portion. Apply the nonadvertising rate to the total weight of the nonadvertising portion. Computation of the key rate will be verified by an employee or supervisor other than the person who originally computed it.

.443 Computation for Sample Copies. Where a key rate has been developed and is being used to compute postage for subscribers' copies, postage on sample copies will be determined by using the same key rate, if sample copies were included when the key rate was computed.

.45 News Agent's Mailing Statement. A news agent presenting second-class matter subject to the zone rates of postage must submit a statement showing the percentages of such matter devoted to advertising and nonadvertising. Publishers should furnish this information to news agents who purchase copies of their publications so such agents may prepare the required statements.

483 Marked Copy

483.1 Requirement to File. The publisher must submit a copy of each issue of a second-class publication to the postmaster at the original entry office. In addition, the publisher must submit, either to the postmaster at the original entry office or to the postmaster at the additional entry office where the publication is produced or prepared for mailing, a copy of each edition of each issue. All copies submitted must be marked by the publisher so the advertising content of the copy may be verified when necessary. Advertising is defined in 422.232. The publisher must also indicate, on the first page of each marked copy, the total units and percentage of space devoted to advertising and nonadvertising material in the copy. This may be expressed in column inches, square inches, pages, or any other recognized units of measure. The publisher must use the same units of measure for both advertising and nonadvertising portions.

483.2 Payment of Advertising Rates on Reading Portions. If desired, the publisher may pay postage at the advertising zone rates on both the advertising and nonadvertising portions instead of marking a copy of each issue to show the advertising and nonadvertising portions. When the amount of advertising exceeds 75 percent, the copies submitted to the postmaster must be marked *Advertising over 75 percent.* When the amount of advertising does not exceed 75 percent, the copies submitted to the postmaster must be marked *Advertising not over 75 percent* on the first page. The entire weight of the copy must be entered on the Form 3541 in the column provided for the advertising portion. The words *Over 75 percent or Not over 75 percent,* whichever is applicable, must be entered on the Form 3541. The word *Waived* must be written in the space provided for the weight of the reading portion on Form 3541. *Exception:* This option does not apply if the advertising rate is lower than the rate for nonadvertising.

490 Ancillary Services

491 Forwarding

491.1 Local Change of Address. When there has been any kind of a change in the local address, copies of second-class publications bearing the old local address will be delivered to the new local address without charge for three months. This procedure will be followed whether or not the copies bear the sender's request for return. The term *local address,* as used in this section, means any address served by the city, rural, or highway contract carriers of any specific post office, or a post office box or general delivery address at the same post office. Form 3576, *Change of Address Notice to Correspondents, Businesses and Publishers,* will be furnished to the addressee at the new local address, and the addressee will be requested to use it promptly to give the sender the new local address.

491.2 Non-Local Change of Address

.21 Guarantee to Pay Forwarding Postage. When a change of address is other than a change of local address, and the addressee has filed a written guarantee (on Form 3575, *Change of Address Order,* or by other means) to pay forwarding postage, the copies of second-class publications bearing the old address will be forwarded to the new address for three months rated with postage due at the nonsubscriber rate computed on the weight of each individually addressed copy or package of unaddressed copies. Form 3576 will be furnished to the addressee at the new address.

.22 Failure to Guarantee. When a change of address is other than a local change of address and the addressee has not filed a written guarantee to pay forwarding postage, copies of second-class publications bearing the old address will not be forwarded, but will be disposed of by the Postal Service.

492 Address Correction Service

492.1 Notifying Publishers. The addressee's new address, or the reason why a second-class publication is undeliverable if the new address is not known, will be furnished to the publishers by the Postal Service. This service is mandatory for all second-class publications and the address correction service fee must be paid for each notice issued (see 412.2).

492.2 Sending Notification. Address correction service will be provided for the first issue after three months when the publication is undeliverable due to a change in the local address. When copies of the publication are undeliverable for any reason other than a change in the local address, the address correction notice will be prepared for the first undeliverable copy of the publication received. Unless copies of the publication are to be

forwarded under 491 or are to be returned under 493, copies received after the address correction notice is mailed will be disposed of as waste.

493 Return

The publisher may request that copies of second-class publications which are undeliverable as addressed be returned to him if he guarantees to pay the return postage. In order to receive this service, the words *RETURN POSTAGE GUARANTEED* must be printed on the envelopes or wrappers, or on one of the outside covers of unwrapped copies, immediately preceded by the sender's name and address, including ZIP Code. The rate charged for return is the nonsubscriber rate, computed on each individually addressed copy or package of unaddressed copies. This rate charge is in addition to the charge for the address correction notice.

BILLING CODE 7710-12-M

U.S. POSTAL SERVICE
STATEMENT OF MAILING—SECOND CLASS PUBLICATIONS

PUBLICATION NO	NAME OF PUBLICATION OR NEWS AGENT	DATE OF MAILING
	SPRINGFIELD GENERAL PRESS	Mo. Day Yr.

POST OFFICE AND STATE	ZIP CODE	FINANCE NUMBER	When this statement is for ALL ISSUES for a calendar month, furnish the following information
SPRINGFIELD, VA	22150	60-0000	NUMBER OF ISSUES

DATE OF ISSUE PRINTED IN COPIES	FREQUENCY OF ISSUE	AVERAGE WEIGHT PER COPY FOR THE ISSUE (125.62)	WEIGHT OF ONE SHEET (125.64, PSM)
	Daily except Sundays & Holidays	LBS.	LBS.
			COMBINED WEIGHT OF ONE COPY FROM EACH ISSUE LBS.

When postage is computed at the key rate, the lines for Zones 1 to 8 need not be completed for each issue. The total zone mailings must be entered in item 1 during the time the key rate is in effect.

EDITION CODE OR KEY	STATEMENT NO. (if required)	FREIGHT BILL NO	POST OFFICE COMPUTED AVERAGE OR COMBINED WEIGHT PER COPY
			LBS.

		ZONE	A ~~SAMPLE COPIES~~	B ~~SUBSCRIB. ERS~~ COPIES	C ~~TOTAL COPIES~~ POSTAGE	D TOTAL (Pounds)	E ADVERTISING PORTION (Pounds)	F POSTAGE RATE PER POUND OR FRACTION: REGULAR	SPECIAL	CLASSROOM	G COMPUTED POSTAGE
OUTSIDE COUNTY — POUND RATE	1. Advertising Portion: PERCENTAGE FOR ONE ISSUE OR ALL ISSUES for a calendar month	1 AND 2			2621×175 = 458.675			12.8¢	8.7¢		
		3			1471×246.4 = 362.664			18.4¢	9.4¢	3.3¢	
		4			1052×198.9 = 209.348			[illegible]	[illegible]	[illegible]	
		5			178×222.7 = 38.590			[illegible]	13.6¢	8.6¢	
		6			124×260 = 32.240			28.0¢	[illegible]	[illegible]	
		7			38×289.4 = 11.172			29.4¢	18.0¢	[illegible]	
		8			21×31.8 = 6.678			31.8¢	18.0¢	[illegible]	
	~~TOTAL COPIES~~			5,997	$1,119.367			Total advertising postage			
	2. ~~TOTAL POUNDS ALL ZONES~~				1,119.367 / 5997 = .186665			.186665			
	3. Total advertising portion (Col. F line 2)							Key rate, if used			
	4. Nonadvertising Portion (Col. D line 1 minus line 3)							[illegible]	8.3¢	3.3¢	
	5. PER PIECE CHARGE (in addition to the pound rate) REGULAR RATE OR SCIENCE OF AGRICULTURE										
	For mailings of 5,000 or more copies per issue outside county										
4-LEVEL	A. (SCF, States & Mixed States)			Total Copies	NO. OF ADDRESSED PIECES			[illegible]			
	B. (3-digit City & 5-digits)			Total Copies	NO. OF ADDRESSED PIECES			5.8¢			
	C. (Carrier Route or Finer Sort)			Total Copies	NO. OF ADDRESSED PIECES			6.6¢			
	Mailings under 5,000 copies per issue outside county										
LEVEL	D. Not presorted to 3-digit City 5-digits			Total Copies	NO. OF ADDRESSED PIECES			2.9¢			
	E. Presorted to 3-digit City 5-digits			Total Copies	NO. OF ADDRESSED PIECES			1.7¢			
	6. SPECIAL RATE OR QUALIFIED CLASSROOM PUBLICATION				NO. OF ADDRESSED PIECES				2.1¢	1.3¢	
IN COUNTY	7. POUND RATE		Sample Copies	Subscriber Copies	Total Copies	TOTAL POUNDS		2.8¢			
	8. PER PIECE CHARGE This charge is in addition to the pound rate					NO. OF ADDRESSED PIECES		1.3¢			
	9. FOREIGN WEIGHT PER COPY (must include the wrapping)			Sample Copies	Subscriber Copies	Total Copies		RATE PER COPY			

10. NONSUBSCRIBER COPIES (Commingled with subscribers copies)	a. NO. OF COPIES	b. ADDRESSED PIECES 5 8:		c. TOTAL POUNDS 15 3:		ITEM 10(b) PLUS 10(c)
		(1) No	(2) POSTAGE	(1) No	(2) POSTAGE	

MAILED BY (Signature required)	COMPUTED BY (Signature required)	TOTAL POSTAGE CHARGE
Thomas Hughes	Neil Murphy Verified by M. Jarrell	
TELEPHONE NO.		

PS Form 3541 Mar. 1979 (Matter in this space shall not be written) Effective July 6, 1979 FINANCIAL DOCUMENT FORWARD TO FINANCE OFFICER

U.S. GPO 1979-0-293-007

Exhibit 482a—Computation of New Key Rate—Form 3541

U.S. POSTAL SERVICE
STATEMENT OF MAILING–SECOND CLASS PUBLICATIONS

PUBLICATION NO.	NAME OF PUBLICATION OR NEWS AGENT	DATE OF MAILING
	SPRINGFIELD GENERAL PRESS	08 01 79

POST OFFICE AND STATE	ZIP CODE	FINANCE NUMBER	When this statement is for ALL ISSUES for a calendar month furnish the following information
Springfield, VA	22150	0000-0000	NUMBER OF ISSUES

DATE OF ISSUE PRINTED IN COPIES	FREQUENCY OF ISSUE	AVERAGE WEIGHT PER COPY FOR THE ISSUE (125.62)	WEIGHT OF ONE SHEET (125.64, PSM)
August 1, 1979	Daily except Sundays + Holidays	.24875 LBS.	LBS
			COMBINED WEIGHT OF ONE COPY FROM EACH ISSUE LBS

When postage is computed at the key rate, the lines for Zones 1 to 8 need not be completed for each issue. The total zone mailings must be entered in item 1 during the time the key rate is in effect.

EDITION CODE OR KEY	STATEMENT NO. (In sequence)	FREIGHT BILL NO.	POST OFFICE-COMPUTED AVERAGE OR COMBINED WEIGHT PER COPY
			.24875 LBS.

OUTSIDE COUNTY — POUND RATE

1 Advertising Portion	ZONE	A SAMPLE COPIES	B SUBSCRIBERS' COPIES	C TOTAL COPIES	D TOTAL (Pounds)	E ADVERTISING PORTION (Pounds)	F POSTAGE RATE PER POUND OR FRACTION: REGULAR	SPECIAL	CLASSROOM	G COMPUTED POSTAGE
PERCENTAGE FOR ONE ISSUE 65.00 OR ALL ISSUES for a calendar month	1 AND 2						17.5¢	8.7¢	4.5¢	
	3						18.4¢	9.4¢	5.5¢	
	4						19.5¢	10.8¢	6.7¢	
	5						22.7¢	12.5¢	8.6¢	
	6						26.6¢	14.1¢	10.8¢	
	7						29.4¢	15.4¢	12.8¢	
	8						31.8¢	16.6¢	[illegible]	
TOTAL COPIES			5,997	5,997			Total advertising postage			
2 TOTAL POUNDS ALL ZONES					1,492	970	.186654			181.05
3 Total advertising portion (Col. E line 2)					970		Key rate, if used			
4 Nonadvertising Portion (Col. D line 2 minus line 3)					522		12.44	6.7¢	3.7¢	68.35

5 PER PIECE CHARGE (in addition to the pound rate)
X REGULAR RATE OR SCIENCE OF AGRICULTURE

For mailings of 5,000 or more copies per issue outside county

LEVEL		Total Copies	NO. OF ADDRESSED PIECES		
	A (SCF, States & Mixed States)	2,000	2,000	7.0¢	140.00
	B. (3-digit City & 5-digits)	2,000	2,000	5.4¢	108.00
	C. (Carrier Route or Finer Sort)	1,997	1,997	4.4¢	87.87

Mailings under 5,000 copies per issue outside county

LEVEL		Total Copies	NO. OF ADDRESSED PIECES		
	D. Not presorted to 3-digit City 5-digits			2.1¢	
	E. Presorted to 3-digit City 5-digits			1.7¢	

6 SPECIAL RATE OR QUALIFIED CLASSROOM PUBLICATION — NO. OF ADDRESSED PIECES — 2.1¢ — 1.3¢

IN-COUNTY

7. POUND RATE	Sample Copies	Subscriber Copies	Total Copies	TOTAL POUNDS		
		1,182	1,182	295	2.8¢	8.26

8. PLR PIECE CHARGE — This charge is in addition to the pound rate. — NO. OF ADDRESSED PIECES 1,182 — 1.3¢ — 15.36

9 FOREIGN	WEIGHT PER COPY (must include the wrapping)	Sample Copies	Subscriber Copies	Total Copies	RATE PER COPY

10 NONSUBSCRIBER COPIES (Commingled with subscribers' copies)	a. NO. OF COPIES	b. ADDRESSED PIECES 58	c. TOTAL POUNDS 15	ITEM 10(2) PLUS 10-d(2)
		(1) No	(2) POSTAGE	(1) No	(2) POSTAGE

MAILED BY (Signature required)	COMPUTED BY (Signature required)	TOTAL POSTAGE CHARGE
Don Hughes	Neil Murphy	$608.92
TELEPHONE NO		

PS Form 3541 Mar 1979 (Mailer must fill in unshaded blocks) Effective July 6, 1979 FINANCIAL DOCUMENT FORWARD TO FINANCE OFFICER

U.S. GPO 1979-0-293-007

Exhibit 482b (p. 1)—Computation of Postage Based on Mailings of One Issue Only—Form 3541

U.S. POSTAL SERVICE
STATEMENT OF MAILING—SECOND CLASS PUBLICATIONS

PUBLICATION NO	NAME OF PUBLICATION OR NEWS AGENT	DATE OF MAILING
	Springfield Commerce Advocate	Mo. 08 Day 01 Yr. 79

POST OFFICE AND STATE	ZIP CODE	FINANCE NUMBER	When this statement is for ALL ISSUES for a calendar month, furnish the following information
Springfield VA	22150	00-0000	NUMBER OF ISSUES

DATE OF ISSUE PRINTED IN COPIES	FREQUENCY OF ISSUE	AVERAGE WEIGHT PER COPY FOR THE ISSUE (125.62)	WEIGHT OF ONE SHEET (125.64, PSM)
August 1, 1979	Daily Except Sundays and Hol.	248250 LBS.	_____ LBS
			COMBINED WEIGHT OF ONE COPY FROM EACH ISSUE _____ LBS

When postage is computed at the key rate, the lines for Zones 1 to 8 need not be completed for each issue. The total zone mailings must be entered in Item 1 during the time the key rate is in effect.

EDITION CODE OR KEY	STATEMENT NO (in sequence)	FREIGHT BILL NO	POST OFFICE COMPUTED AVERAGE OR COMBINED WEIGHT PER COPY
			[illegible] LBS

OUTSIDE COUNTY — POUND RATE

1 Advertising Portion	ZONE	A SAMPLE COPIES	B SUBSCRIBERS' COPIES	C TOTAL COPIES	D TOTAL (Pounds)	E ADVERTISING PORTION (Pounds)	F POSTAGE RATE PER POUND OR FRACTION: REGULAR	SPECIAL	CLASSROOM	G COMPUTED POSTAGE
PERCENTAGE FOR	1 AND 2		2,621	2,621	652	313	[illegible]	[illegible]	[illegible]	[illegible]
ONE ISSUE	3		1,971	1,971	491	236	[illegible]	[illegible]	[illegible]	[illegible]
48.00	4		1,052	1,052	262	126	[illegible]	[illegible]	[illegible]	[illegible]
OR ALL ISSUES for a calendar month	5		170	170	43	21	[illegible]	[illegible]	[illegible]	[illegible]
	6		124	124	31	15	[illegible]	[illegible]	[illegible]	[illegible]
	7		38	38	10	5	[illegible]	[illegible]	[illegible]	[illegible]
	8		21	21	6	3	[illegible]	[illegible]	[illegible]	[illegible]
TOTAL COPIES			5,997	5,997						134.39
2 TOTAL POUNDS ALL ZONES					1,492					
3 Total advertising portion (Col. E line 2)					719					
4 Nonadvertising Portion (Col. D line 2 minus line 3)					773		[illegible]	[illegible]	[illegible]	101.27

5 PER PIECE CHARGE (in addition to the pound rate)
X REGULAR RATE OR SCIENCE OF AGRICULTURE

For mailings of 5,000 or more copies per issue outside county

LEVEL	Total Copies	NO. OF ADDRESSED PIECES		
A. (SCF, States & Mixed States)	2,000	2,000	[illegible]	140.00
B. (3-digit City & 5-digit)	2,000	2,000	[illegible]	108.00
C. (Carrier Route or Finer Sort)	1,997	1,997	[illegible]	17.97

Mailings under 5,000 copies per issue outside county

LEVEL	Total Copies	NO. OF ADDRESSED PIECES		
D. Not presorted to 3-digit City 5-digits			[illegible]	
E. Presorted to 3-digit City 5-digits			[illegible]	

6 SPECIAL RATE OR QUALIFIED CLASSROOM PUBLICATION — NO. OF ADDRESSED PIECES — [illegible] — 2.61 — 1.36 — [illegible]

IN-COUNTY

7. POUND RATE	Sample Copies	Subscriber Copies	Total Copies	TOTAL POUNDS		
		1,182	1,182	295	2.86	8.26

8 PER PIECE CHARGE — This charge is in addition to the pound rate — NO. OF ADDRESSED PIECES 1,182 — 1.36 — 15.34

9 FOREIGN WEIGHT PER COPY (must include the wrapping)	Sample Copies	Subscriber Copies	Total Copies	RATE PER COPY	

10 NONSUBSCRIBER COPIES (Commingled with subscribers' copies)	a. NO. OF COPIES	b. ADDRESSED PIECES 5.82		c. TOTAL POUNDS 15.30		TOTAL
		(1) No	(2) POSTAGE	(1) No	(2) POSTAGE	

MAILED BY (Signature required) Tom Hughes
TELEPHONE NO
COMPUTER [illegible] Hank D Alexander
TOTAL POSTAGE CHARGE $595.15

PS Form 3541 Mar 1979 (Mailer must fill in unshaded blocks) Effective July 6, 1979 FINANCIAL DOCUMENT FORWARD TO FINANCE OFFICER
U.S. GPO 1979-0-293-007

Exhibit 482b (p. 2)—Computation of Postage Based on Mailings of One Issue Only—Form 3541

U.S. POSTAL SERVICE
STATEMENT OF MAILING—SECOND CLASS PUBLICATIONS

PUBLICATION NO.	NAME OF PUBLICATION OR NEWS AGENT	DATE OF MAILING
	Ben Franklin Park Gazette	Mo. 08 Day 01 Yr. 79

POST OFFICE AND STATE	ZIP CODE	FINANCE NUMBER	When this statement is for ALL ISSUES for a calendar month, furnish the following information
Springfield, VA	22150	0000-0000	NUMBER OF ISSUES

DATE OF ISSUE PRINTED IN COPIES	FREQUENCY OF ISSUE	AVERAGE WEIGHT PER COPY FOR THE ISSUE (125.62)	WEIGHT OF ONE SHEET (125.64, PSM)
August 1, 1979	Daily except Sundays and Holidays	.248750 LBS.	LBS.
			COMBINED WEIGHT OF ONE COPY FROM EACH ISSUE LBS.

When postage is computed at the key rate, the lines for Zones 1 to 8 need not be completed for each issue. The total zone mailings must be entered in Item 1 during the time the key rate is in effect.

EDITION CODE OR KEY	STATEMENT NO. (in sequence)	FREIGHT BILL NO.	POST OFFICE-COMPUTED AVERAGE OR COMBINED WEIGHT PER COPY
			.248750 LBS.

OUTSIDE COUNTY — POUND RATE	ZONE	A SAMPLE COPIES	B SUBSCRIBERS' COPIES	C TOTAL COPIES	D TOTAL Pounds	E ADVERTISING PORTION Pounds	F POSTAGE RATE PER POUND OR FRACTION: REGULAR	SPECIAL	CLASSROOM	G COMPUTED POSTAGE
1 Advertising Portion: PERCENTAGE FOR ONE ISSUE (Not Over) OR ALL ISSUES for a calendar month	1 AND 2						17.5¢	8.7¢	6.5¢	
	3						18.4¢	9.4¢	5.6¢	
	4						18.9¢	10.8¢	6.7¢	
	5						22.7¢	12.5¢	8.6¢	
	6						28.0¢	14.1¢	10.8¢	
	7						29.4¢	15.4¢	11.8¢	
	8						31.8¢	16.6¢	[illegible]	
TOTAL COPIES			5,997	5,997			Total advertising portion			
2 TOTAL POUNDS ALL ZONES					1,492	1,492	.18665¢			278.49
3 Total advertising portion (Col. E line 2)					1,492		▲ Key rate, if used ▲			
4 Nonadvertising Portion (Col. D line 2 minus line 3)					Waived		13.7¢	5.7¢	3.7¢	

OUTSIDE COUNTY					
5 PER PIECE CHARGE (in addition to the pound rate) REGULAR RATE OR SCIENCE OF AGRICULTURE					
For mailings of 5,000 or more copies per issue outside county					
LEVEL A (SCF, States & Mixed States)	Total Copies 5,997	NO. OF ADDRESSED PIECES 5,997	7.0¢		419.79
LEVEL B (5-digit City & 5-digits)	Total Copies	NO. OF ADDRESSED PIECES	5.4¢		
LEVEL C (Carrier Route or Finer Sort)	Total Copies	NO. OF ADDRESSED PIECES	4.4¢		
Mailings under 5,000 copies per issue outside county					
LEVEL D. Not presorted to 3-digit City 5-digits	Total Copies	NO. OF ADDRESSED PIECES	2.1¢		
LEVEL E. Presorted to 3-digit City 5-digits	Total Copies	NO. OF ADDRESSED PIECES	1.7¢		
6 SPECIAL RATE OR QUALIFIED CLASSROOM PUBLICATION		NO. OF ADDRESSED PIECES		2.1¢ / 1.3¢	

IN-COUNTY	Sample Copies	Subscriber Copies	Total Copies			
7. POUND RATE		1,182	1,182	TOTAL POUNDS 295	2.8¢	8.26
8 PER PIECE CHARGE This charge is in addition to the pound rate				NO. OF ADDRESSED PIECES 1,182	1.3¢	15.37

9 FOREIGN	WEIGHT PER COPY (must include the wrapping)	Sample Copies	Subscriber Copies	Total Copies	RATE PER COPY

10 NONSUBSCRIBER COPIES (Commingled with subscribers' copies)	a. NO. OF COPIES	b. ADDRESSED PIECES 58 (1) No.	(2) POSTAGE	c. TOTAL POUNDS 15.3 (1) No.	(2) POSTAGE	ITEM 6(h) PLUS 10(c)(2)

MAILED BY (Signature and title)	COMPUTED BY (Signature required)	TOTAL POSTAGE CHARGE
Jeffrey Murakami	Haskell Alexander	721.91

TELEPHONE NO.

PS Form 3541 Mar. 1979 (Matter must fill out shaded items) Effective July 6, 1979 FINANCIAL DOCUMENT FORWARD TO FINANCE OFFICER

U.S. GPO 1979-0-293-002

Exhibit 482b (p.3)—Computation of Postage Based on Mailings of One Issue Only—Form 3541

U.S. POSTAL SERVICE
STATEMENT OF MAILING—SECOND CLASS PUBLICATIONS

PUBLICATION NO	NAME OF PUBLICATION OR NEWS AGENT	DATE OF MAILING (Mo. Day Yr.)
	Pinewood Oak's Times-Mirror	08 01 79

POST OFFICE AND STATE	ZIP CODE	FINANCE NUMBER	When this statement is for ALL ISSUES for a calendar month, furnish the following information
Springfield, VA	22150	00-0000	NUMBER OF ISSUES 25

DATE OF ISSUE PRINTED IN COPIES	FREQUENCY OF ISSUE	AVERAGE WEIGHT PER COPY FOR THE ISSUE (125.62)	WEIGHT OF ONE SHEET (125.64, PSM)
Aug. 1-31, 1979 Including 2	Daily except Sundays + Holidays	LBS.	.04583 LBS.
			COMBINED WEIGHT OF ONE COPY FROM EACH ISSUE 6.278250 LBS.

When postage is computed at the key rate, the lines for Zones 1 to 8 need not be completed for each issue. The total zone mailings must be entered in item 1 during the time the key rate is in effect.

EDITION CODE OR KEY	STATEMENT NO. (in sequence)	FREIGHT BILL NO	POST OFFICE COMPUTED AVERAGE OR COMBINED WEIGHT PER COPY
			5.278250

OUTSIDE COUNTY — POUND RATE

1 Advertising Portion	ZONE	A SAMPLE COPIES	B SUBSCRIBERS' COPIES	C TOTAL COPIES	D TOTAL (Pounds)	E ADVERTISING PORTION (Pounds)	F POSTAGE RATE PER POUND OR FRACTION: REGULAR	SPECIAL	CLASSROOM	G COMPUTED POSTAGE
PERCENT AGE FOR ONE ISSUE	1 AND 2									
	3									
	4									
OR ALL ISSUES for a calendar month	5									
	6									
	7									
65.00	8									
TOTAL COPIES			5,997	5,997						
2 TOTAL POUNDS ALL ZONES					[illegible]	[illegible]	15,695			[illegible]
3 Total advertising portion (Col. E line 2)					29,242					
4 Nonadvertising Portion (Col. D line 2 minus line 3)					13,052		[illegible]	[illegible]	[illegible]	1,709.52

5 PER PIECE CHARGE (in addition to the pound rate)
☒ REGULAR RATE OR SCIENCE OF AGRICULTURE

For mailings of 5,000 or more copies per issue outside county

LEVEL		Total Copies	NO. OF ADDRESSED PIECES				
	A. (SCF, States & Mixed States)	149,925	149,925	[illegible]			10,494.75
	B. (3-digit City & 5-digits)	Total Copies	NO. OF ADDRESSED PIECES	[illegible]			
	C. (Carrier Route or Finer Sort)	Total Copies	NO. OF ADDRESSED PIECES	[illegible]			

Mailings under 5,000 copies per issue outside county

LEVEL		Total Copies	NO. OF ADDRESSED PIECES				
	D. Not presorted to 3-digit City 5-digits	Total Copies	NO. OF ADDRESSED PIECES	[illegible]			
	E. Presorted to 3-digit City 5-digits	Total Copies	NO. OF ADDRESSED PIECES	[illegible]			
6 SPECIAL RATE OR QUALIFIED CLASSROOM PUBLICATION			NO. OF ADDRESSED PIECES		2.16	1.38	

IN COUNTY

7. POUND RATE	Sample Copies	Subscriber Copies	Total Copies	TOTAL POUNDS			
		1,182	1,182	7,351		2.84	305.53
8 PER PIECE CHARGE This charge is in addition to the pound rate				NO. OF ADDRESSED PIECES 29,550		1.38	384.15

9 FOREIGN WEIGHT PER COPY (must include the wrapping) 402	Sample Copies	Subscriber Copies	Total Copies	RATE PER COPY	
		150	0750	.13	487.50

10 NONSUBSCRIBER COPIES (Commingled with subscribers copies)	a. NO. OF COPIES	b. ADDRESSED PIECES 5.80		c. TOTAL POUNDS 15.30		TOTAL POSTAGE PLUS 10-(2)
		(1) No	(2) POSTAGE	(1) No	(2) POSTAGE	

MAILED BY (Signature required)	COMPUTED BY (Signature required)	TOTAL POSTAGE CHARGE
Tom Hughes	Hashel Alexander	$17,806.92

TELEPHONE NO.

PS Form 3541 Mar. 1979 — Effective July 6, 1979 — FINANCIAL DOCUMENT FORWARD TO FINANCE OFFICER

U.S. GPO 1979-0-293-007

Exhibit 482c—Computation of Postage Based on Mailings of All Issues for Calendar Month—Form 3541

U.S. POSTAL SERVICE
STATEMENT OF MAILING—SECOND CLASS PUBLICATIONS

PUBLICATION NO.	NAME OF PUBLICATION OR NEWS AGENT	DATE OF MAILING
	Springfield Day Primary Review	Month 08 Day 01 Year 79

POST OFFICE AND STATE	ZIP CODE	FINANCE NUMBER	When this statement is for ALL ISSUES for a calendar month, furnish the following information
Springfield, VA	22150	0000	NUMBER OF ISSUES

DATE OF ISSUE PRINTED IN COPIES	FREQUENCY OF ISSUE	AVERAGE WEIGHT PER COPY FOR THE ISSUE (125.62)	WEIGHT OF ONE SHEET (125.64, PSMM)	COMBINED WEIGHT OF ONE COPY FROM EACH ISSUE
Aug 1, 1979	Weekly	12.5000 LBS.	LBS.	LBS.

When postage is computed at the key rate, the lines for Zones 1 to 8 need not be completed for each issue. The total zone mailings must be entered in item 1 during the time the key rate is in effect.

EDITION CODE OR KEY	STATEMENT NO. (In sequence)	FREIGHT BILL NO.	POST OFFICE COMPUTED AVERAGE OR COMBINED WEIGHT PER COPY
			12.5000 LBS.

OUTSIDE COUNTY — POUND RATE	ZONE	A. SAMPLE COPIES	B. SUBSCRIBERS' COPIES	C. TOTAL COPIES	D. TOTAL (Pounds)	E. ADVERTISING PORTION (Pounds)	F. POSTAGE RATE PER POUND OR FRACTION: REGULAR	SPECIAL	CLASSROOM	G. COMPUTED POSTAGE
1. Advertising Portion — PERCENT ADVERTISING FOR ONE ISSUE: None; OR SEE INSERTS for a calendar month	1 AND 2						17.5¢	8.7¢	4.9¢	
	3						18.4¢	9.4¢	5.5¢	
	4						19.9¢	10.8¢	6.7¢	
	5						22.7¢	12.5¢	8.6¢	
	6						26.0¢	14.1¢	10.8¢	
	7						29.4¢	15.4¢	12.5¢	
	8						31.3¢	16.6¢	14.3¢	
TOTAL COPIES			120,000	120,000			Total advertising postage			
2. TOTAL POUNDS ALL ZONES										
3. Total advertising portion (Col. F line 3)							Key rate, if used			
4. Nonadvertising Portion (Col. D line 2 minus line 3)					15,000		12.3¢	5.2¢	3.7¢	555.00

5. PER PIECE CHARGE (in addition to the pound rate) REGULAR RATE OR SCIENCE OF AGRICULTURE						
For mailings of 5,000 or more copies per issue outside county						
LEVEL A. (N.E. States & Mixed States)	Total Copies	NO. OF ADDRESSED PIECES	7.0¢			
LEVEL B. (Bulgit City & Bulgitsk)	Total Copies	NO. OF ADDRESSED PIECES	5.4¢			
LEVEL C. (Carrier Route or Finer Sort)	Total Copies	NO. OF ADDRESSED PIECES	4.4¢			
Mailings under 5,000 copies per issue outside county						
LEVEL D. Not presorted to Bulgit City Bulgitsk	Total Copies	NO. OF ADDRESSED PIECES	2.1¢			
LEVEL E. Presorted to Bulgit City Bulgitsk	Total Copies	NO. OF ADDRESSED PIECES	1.7¢			
6. SPECIAL RATE OR ✕ QUALIFIED CLASSROOM PUBLICATION		NO. OF ADDRESSED PIECES 120,000		2.1¢	1.3¢	1,560.00

IN COUNTY	Sample Copies	Subscriber Copies	Total Copies			
7. POUND RATE		504	504	TOTAL POUNDS 63	2.8¢	1.77
8. PER PIECE CHARGE This charge is in addition to the pound rate				NO. OF ADDRESSED PIECES 504	1.3¢	6.56

9. FOREIGN WEIGHT PER COPY (must include the wrapping)	Sample Copies	Subscriber Copies	Total Copies	RATE PER COPY	

10. NONSUBSCRIBER COPIES (Commingled with subscribers' copies)	NO. OF COPIES	a. ADDRESSED PIECES (1) No.	(2) POSTAGE	c. TOTAL POUNDS (1) No.	(2) POSTAGE	ITEM 10d(2) PLUS 10c(2)

MAILED BY	COMPUTED BY (Signature required)	TOTAL POSTAGE CHARGE
Thomas Hughes	Haskel Alexander	$2,123.33

PS Form 3541 Effective July 6, 1979 FINANCIAL DOCUMENT FORWARD TO FINANCE OFFICER
U.S. GPO 1979-0-293-007

Exhibit 482d—Computation of Postage on Mailings of One Issue of a Qualifying Classroom Publication Issued Weekly—Form 3541

U.S. POSTAL SERVICE
STATEMENT OF MAILING—SECOND CLASS PUBLICATIONS

PUBLICATION NO	NAME OF PUBLICATION OR NEWS AGENT	DATE OF MAILING (Mo. Day Yr.)
	Ben Franklin Park Bulletin	08 01 79

POST OFFICE AND STATE	ZIP CODE	FINANCE NUMBER	When this statement is for ALL ISSUES for a calendar month, furnish the following information
Springfield, VA	22150	00-0000	NUMBER OF ISSUES

DATE OF ISSUE PRINTED IN COPIES	FREQUENCY OF ISSUE	AVERAGE WEIGHT PER COPY FOR THE ISSUE (125.62)	WEIGHT OF ONE SHEET (125.64, PSM)
Aug 1, 1979	weekly	.093750 LBS.	LBS.
			COMBINED WEIGHT OF ONE COPY FROM EACH ISSUE LBS.

When postage is computed at the key rate, the lines for Zones 1 to 8 need not be completed for each issue. The total zone mailings must be entered in item 1 during the time the key rate is in effect.

EDITION CODE OR KEY	STATEMENT NO. (in sequence)	FREIGHT BILL NO	POST OFFICE-COMPUTED AVERAGE OR COMBINED WEIGHT PER COPY
			.093750 LBS.

POUND RATE — OUTSIDE COUNTY

1. Advertising Portion	ZONE	A SAMPLE COPIES	B SUBSCRIBERS' COPIES	C TOTAL COPIES	D TOTAL (Pounds)	E ADVERTISING PORTION (Pounds)	F POSTAGE RATE PER POUND OR FRACTION: REGULAR	SPECIAL	CLASSROOM	G COMPUTED POSTAGE
PERCENTAGE FOR ONE ISSUE 9.60 OR ALL ISSUES for a calendar month	1 AND 2						17.5¢	8.7¢	4.9¢	
	3						18.4¢	9.4¢	5.5¢	
	4						18.8¢	10.8¢	6.7¢	
	5						22.7¢	12.9¢	6.6¢	
	6						28.0¢	14.1¢	10.3¢	
	7						29.6¢	15.4¢	12.5¢	
	8						31.8¢	18.8¢	[illegible]	
TOTAL COPIES			10,005	10,005			Total advertising postage			
2. TOTAL POUNDS ALL ZONES					938					
3. Total advertising portion (Col. E line 5)					0		Key rate, if used			
4. Nonadvertising Portion (Col. D line 5 minus line 3)					938		13.5¢	5.7¢	3.7¢	53.47

5. PER PIECE CHARGE (in addition to the pound rate)
REGULAR RATE OR SCIENCE OF AGRICULTURE
For mailings of 5,000 or more copies per issue outside county

LEVEL				
A. (SCF, States & Mixed States)	Total Copies	NO. OF ADDRESSED PIECES	7.0¢	
B. (5-digit City & 3-digits)	Total Copies	NO. OF ADDRESSED PIECES	5.4¢	
C. (Carrier Route or Finer Sort)	Total Copies	NO. OF ADDRESSED PIECES	4.4¢	

Mailings under 5,000 copies per issue outside county

LEVEL				
D. Not presorted to 5-digit City 3-digits	Total Copies	NO. OF ADDRESSED PIECES	2.3¢	
E. Presorted to 5-digit City 3-digits	Total Copies	NO. OF ADDRESSED PIECES	1.7¢	

6. X SPECIAL RATE OR QUALIFIED CLASSROOM PUBLICATION — NO. OF ADDRESSED PIECES 10,005 — 2.1¢ — 1.3¢ — 210.11

IN COUNTY

7. POUND RATE	Sample Copies	Subscriber Copies	Total Copies	TOTAL POUNDS		
		15,008	15,008	1,407	2.9¢	39.40

8. PER PIECE CHARGE — This charge is in addition to the pound rate — NO. OF ADDRESSED PIECES 15,008 — 1.3¢ — 195.11

9. FOREIGN — WEIGHT PER COPY (must include the wrapping) 2 oz — Sample Copies — Subscriber Copies 5 — Total Copies 5 — RATE PER COPY 13¢ — .65

10. NONSUBSCRIBER COPIES (Commingled with subscribers copies) — a. NO. OF COPIES — b. ADDRESSED PIECES 5 8[illegible] — c. TOTAL POUNDS 15.3[illegible] — (1) No. — (2) POSTAGE — (1) No. — (2) POSTAGE — ITEM (1)(2) (PLUS 19-2)

MAILED BY: Thomas Hughes — TELEPHONE NO. — COMPUTED BY (signature required): Haskel Alexander — TOTAL POSTAGE CHARGE $198.78

PS Form 3541 — Effective July 6, 1979 — FINANCIAL DOCUMENT FORWARD TO FINANCE OFFICER

U.S. GPO 1979-0-293-007

Exhibit 482e—Computation of Postage Based on Mailings of One Issue of a Qualified Nonprofit Organization Issued Weekly Containing Less than 10% Advertising—Form 3541

U.S. POSTAL SERVICE
STATEMENT OF MAILING—SECOND CLASS PUBLICATIONS

PUBLICATION NO.	NAME OF PUBLICATION OR NEWS AGENT	DATE OF MAILING (Mo. Day Yr.)
	The Kiteflyer Bulletin	08 01 79

POST OFFICE AND STATE	ZIP CODE	FINANCE NUMBER	When this statement is for ALL ISSUES for a calendar month, furnish the following information
Springfield, VA	22150	00-0000	NUMBER OF ISSUES

DATE OF ISSUE PRINTED IN COPIES	FREQUENCY OF ISSUE	AVERAGE WEIGHT PER COPY FOR THE ISSUE (125.62)	WEIGHT OF ONE SHEET (125.64, PSM)	COMBINED WEIGHT OF ONE COPY FROM EACH ISSUE
Aug. 1, 1979	Weekly	.093750 LBS.	LBS.	LBS.

When postage is computed at the key rate, the lines for Zones 1 to 8 need not be completed for each issue. The total zone mailings must be entered in item 1 during the time the key rate is in effect.

EDITION CODE OR KEY	STATEMENT NO. (for sequence)	FREIGHT BILL NO.	POST OFFICE COMPUTED AVERAGE OR COMBINED WEIGHT PER COPY
			.093750 LBS.

OUTSIDE COUNTY — POUND RATE

1. Advertising Portion	ZONE	A. SAMPLE COPIES	B. SUBSCRIBERS' COPIES	C. TOTAL COPIES	D. TOTAL Pounds	E. ADVERTISING PORTION Pounds	F. POSTAGE RATE PER POUND OR FRACTION: REGULAR	SPECIAL	CLASSROOM	G. COMPUTED POSTAGE
PERCENTAGE [illegible]	1 AND 2		9,065	9,065	850	128	17.5¢	8.7¢	4.3¢	[illegible]
ONE INCH	3		320	320	30	5	18.4¢	9.4¢	5.5¢	.47
15.00	4		213	213	20	3	19.9¢	10.8¢	6.7¢	.33
OR PER INCH for a calendar month	5		192	192	18	3	22.7¢	12.5¢	8.0¢	.38
	6		106	106	10	2	28.0¢	14.1¢	10.9¢	.22
	7		53	53	5	1	29.4¢	16.4¢	12.5¢	.16
	8		53	53	5	1	31.8¢	18.6¢	14.0¢	.17
TOTAL COPIES			10,002	10,002			Total advertising postage			12.44
2. TOTAL POUNDS ALL ZONES					938	143				
3. Total advertising portion (col. E line 2)					143		Key rate, if used			
4. Nonadvertising Portion (col. D line 2 minus line 3)					795		12.2¢	5.7¢	3.7¢	45.32

5. PER PIECE CHARGE (in addition to the pound rate)
REGULAR RATE OR SCIENCE OF AGRICULTURE

For mailings of 5,000 or more copies per issue outside county

LEVEL		Total Copies	NO. OF ADDRESSED PIECES		
	A. [illegible]			7.0¢	
	B. [illegible]			5.4¢	
	C. [illegible]			4.4¢	

Mailings under 5,000 copies per issue outside county

LEVEL		Total Copies	NO. OF ADDRESSED PIECES		
	D. Not presorted to [illegible]			2.1¢	
	E. Presorted to [illegible]			1.7¢	

6. X SPECIAL RATE OR QUALIFIED CLASSROOM PUBLICATION — NO. OF ADDRESSED PIECES 10,002 — 2.1¢ — F.3¢ — 210.02

IN-COUNTY

7. POUND RATE	Sample Copies	Subscriber Copies	Total Copies	TOTAL POUNDS		
		15,008	15,008	1,407	2.8¢	39.40

8. PER PIECE CHARGE — This charge is in addition to the pound rate — NO. OF ADDRESSED PIECES 15,008 — 1.3¢ — 195.11

9. FOREIGN — WEIGHT PER COPY (more pounds include the wrapping) — Sample Copies — Subscriber Copies 5 — Total Copies 5 — RATE PER COPY .13 — .65

10. NONSUBSCRIBER COPIES (Community Free subscribers copies) — a. NO. OF COPIES — b. ADDRESSED PIECES 5 9 — c. TOTAL POUNDS (5 3) — (1) No. — (2) POSTAGE — (1) No. — (2) POSTAGE — (Item 10(c)(2)) PLUS 10(d)(2)

MAILED BY: Thomas Hughes — COMPUTED BY (Signature required): Charles Schmidlapp — TOTAL POSTAGE CHARGE $503.47

PS Form 3541 — Effective July 6, 1979 — FINANCIAL DOCUMENT FORWARD TO FINANCE OFFICER — U.S. GPO 1979-0-293-007

Exhibit 482f—Computation of Postage Based on Mailings of One Issue of a Qualified Nonprofit Organization Issued Weekly Containing More than 10% Advertising—Form 3541

U.S. POSTAL SERVICE
STATEMENT OF MAILING–SECOND CLASS PUBLICATIONS

PUBLICATION NO	NAME OF PUBLICATION OR NEWS AGENT	DATE OF MAILING
	Ben Franklin Park Agricultural Review	08 01 79

POST OFFICE AND STATE	ZIP CODE	FINANCE NUMBER	NUMBER OF ISSUES
Springfield, VA	22150	000-0000	

DATE OF ISSUE PRINTED IN COPIES	FREQUENCY OF ISSUE	AVERAGE WEIGHT PER COPY FOR THE ISSUE (125.02)	WEIGHT OF ONE SHEET (125.64 PSM)	COMBINED WEIGHT OF ONE COPY FROM EACH ISSUE
August 1979	Monthly	.375000 LBS	LBS	LBS

When postage is computed at the key rate, the lines for Zones 1 to 8 need not be completed for each issue. The total zone mailings must be entered in Item 1 during the time the key rate is in effect.

EDITION CODE OR KEY	STATEMENT NO.	FREIGHT BILL NO	POST OFFICE-COMPUTED AVERAGE OR COMBINED WEIGHT PER COPY
			.375000

OUTSIDE COUNTY — POUND RATE

1 Advertising Portion	ZONE	A SAMPLE COPIES	B SUBSCRIBERS' COPIES	C TOTAL COPIES	D TOTAL Pound	E ADVERTISING PORTION (Pounds)	F POSTAGE RATE PER POUND OR FRACTION REG LIB	SPECIAL	CLASSROOM	G COMPUTED POSTAGE
PERCENTAGE FOR ONE ISSUE	1 AND 2	502	14,999	15,501	5,813	2,907	[illegible]	[illegible]	[illegible]	[illegible]
50.00	3		2,000	2,000	750	375	18.44	[illegible]	[illegible]	[illegible]
OR ALL ISSUES for a calendar month	4		1,000	1,000	375	188	[illegible]	[illegible]	[illegible]	[illegible]
	5		501	501	188	94	[illegible]	12.64	[illegible]	[illegible]
	6		501	501	188	94	29.84	14.74	10.84	[illegible]
	7		501	501	188	94	29.84	15.44	[illegible]	27.64
	8		501	501	188	94	31.84	18.64	[illegible]	28.90
TOTAL COPIES		502	20,003	20,505			Total advertising postage			462.65

2 TOTAL POUNDS ALL ZONES	7,690	3,846
3 Total advertising portion (Col. D line 5)	3,846	[redacted]
4 Nonadvertising Portion (Col. D line 5 minus line 3)	3,844	[redacted]

4			1.84	1.34	1.74	503.57

5 PER PIECE CHARGE (in addition to the pound rate)
REGULAR RATE OR X SCIENCE OF AGRICULTURE

For mailings of 5,000 or more copies per issue outside county [redacted]

LEVEL					
A. ISCF, States & Mixed States	Total Copies	NO. OF ADDRESSED PIECES	[illegible]	[redacted]	
B. 13-digit City & 5-digits	Total Copies	NO. OF ADDRESSED PIECES	[illegible]	[redacted]	
C. Carrier Route or Finer Sort	Total Copies	NO. OF ADDRESSED PIECES	4.44	[redacted]	

Mailings under 5,000 copies per issue outside county [redacted]

LEVEL					
D. Not presorted to 5-digit City 5-digits	Total Copies	NO. OF ADDRESSED PIECES	2.34	[redacted]	
E. Presorted to 5-digit City 5-digits	Total Copies	NO. OF ADDRESSED PIECES	1.74	[redacted]	

6 SPECIAL RATE OR QUALIFIED CLASSROOM PUBLICATION — NO. OF ADDRESSED PIECES [redacted] 2.14 1.34

IN-COUNTY

7. POUND RATE	Sample Copies	Subscriber Copies 1,250	Total Copies 1,250	TOTAL POUNDS 468	2.84	13.11
8 PER PIECE CHARGE This charge is in addition to the pound rate				NO. OF ADDRESSED PIECES 1250	1.34	16.25

9 FOREIGN WEIGHT PER COPY (may include the wrapping)	Sample Copies	Subscriber Copies	Total Copies	RATE PER COPY	

10 NONSUBSCRIBER COPIES (Commingled with subscribers' copies)	a. NO. OF COPIES	b. ADDRESSED PIECES	c. TOTAL POUNDS	ITEM 10(2) PLUS 10(2)
		(1) No. (2) POSTAGE	(1) No. (2) POSTAGE	

MAILED BY	COMPUTED BY (Signature required)	TOTAL POSTAGE CHARGE
Tom Hughes	Haskel Alexander	$995.58

TELEPHONE NO

PS Form 3541 Mar 1979 — Effective July 6, 1979 — FINANCIAL DOCUMENT FORWARD TO FINANCE OFFICER — U.S.G.P.O. 1979-0-293-007

Exhibit 482g—Computation of Postage Based on Mailings of One Issue of a Qualified Science of Agriculture Publication—Form 3541

BILLING CODE 7710-12-C

CHAPTER 5

Controlled Circulation Mail

510 Rates and Fees

511 Rates

511.1 Rate Elements. The postage charged for mailing controlled circulation matter is based on the application of the two following rate elements to the mailing.

a. Per-pound rate. The total weight of the mailing in pounds is multiplied by this rate.

b. Per-piece rate. The total number of pieces in the mailing is multiplied by this rate.

Note: The postage to be paid for a mailing is the sum of the charges determined by applying the per-pound rate and the charges determined by applying the per-piece rate.

511.2 Current Rates

Per pound or fraction of a pound	15.3¢
Per piece charge	5.8¢

511.3 Form 3541–A. The mailer must use a Form 3541–A, *Statement of Mailing—Controlled Circulation Publications*, to compute the applicable postage. A completed Form 3541–A must be submitted by the mailer to the Postal Service with each mailing.

512 Fees

512.1 Address Correction Service Fee. The fee for address correction service is 25¢ per notice issued.

512.2 Application Fee. There are no application fees for controlled circulation publications.

520 Classification

521 Description and Qualifications

A publication whether circulated either free or to paid subscribers, is eligible for controlled circulation authorization if it meets *all* of the following qualifications:

a. Each issue must contain at least 24 pages;

b. No issue may contain more than 75 percent advertising (see 522);

c. The publication must be issued at regular intervals of four or more times a year; and

d. The publication may not be owned or controlled by one or more individuals or business concerns and conducted as an auxiliary to and essentially for the advancement of the main business or calling of those who own or control it.

e. The name of the publication must be shown on the front/cover page in a position and in a style and size of type that makes it clearly distinguishable from the name of the publisher or other items on the front.

522 Definition of Advertising

522.1 General. The term *advertising* includes all materials for the publication of which a valuable consideration is paid, accepted, or promised; that calls attention to something for the purpose of getting people to buy it, sell it, seek it, or support it.

522.2 Specific. If an advertising rate is charged for the publication of reading matter or other material, such material shall be deemed to be *advertising*. Articles, items, and notices in the form of reading matter inserted in accordance with a custom or understanding that textual matter is to be inserted for the advertiser or his products in the publication in which a display advertisement appears are deemed to be *advertising*. If a publication advertises its own services or issues, or any other business of the publisher whether in the form of display advertising or editorial or reading matter, this is deemed to be *advertising*. Public service advertisements for which no consideration has been paid are not considered advertising for postal purposes.

523 What May Be Mailed

Only bona fide pages which are an integral part of an authorized controlled circulation publication may be mailed at controlled circulation rates. *Enclosures my not be mailed at the controlled circulation rates.* Provisions for combination mailings of controlled circulation publications with other classes of mail are contained in 136.31. Supplements, parts, sections, etc., are not prohibited, providing they are, in fact, integral parts of the publication. Although not required, the following are indicators (but not conclusive evidence) that material is an integral part of a publication:

a. Inclusion in the publication's pagination;

b. Listing material in a *List of Advertisers;*

c. Listing in a table of contents; or

d. Indication, in the primary part of the publication, that specific material is included as parts, sections, or supplements.

Note:

Printing "Supplement to . . . ." on material is not, by itself, sufficient to establish it as an integral part of a publication.

530 Service Objectives

Controlled circulation publications may receive deferred service. The Postal Service does not guarantee the delivery of controlled circulation mail within a specified time.

540 Authorizations and Permits

541 Controlled Circulation Applications

541.1 General. Only publishers of publications which have received controlled circulation authorization from the Office of Mail Classification, Rates and Classification Department, USPS Headquarters may mail at the controlled circulation rates.

541.2 Application Procedures

.21 A publisher may apply for controlled circulation mailing authorization by letter to the postmaster at the office where the mailings are to be made. No Postal Service form is provided for this purpose and no fee is charged for the application. A separate application must be filed at each office where the publisher desires controlled circulation authorization. Letters of application must be submitted in duplicate and must state the name of the publication, the frequency of issue, the name and address of the publishers, and other information substantiating that the publication qualifies under the provisions of 521d. The publisher must submit two copies of the most recent issue of the publication with the application. The nonadvertising portion must be marked in the copies and the percentage of nonadvertising content noted on the cover.

.22 If the publisher intends to cancel an existing authorization at another post office, the application must include the name of the post office where the authorization is to be canceled.

541.3 Approving or Denying Applications. The postmaster will submit the application and one copy of the publication to the Office of Mail Classification, Rates and Classification Department, USPS Headquarters, Washington, DC 20260. The General Manager, Domestic Mail Classification Division, Office of Mail Classification, rules on all controlled circulation applications. He will notify the postmaster whether the application was approved or denied. The postmaster will then notify the applicant.

541.4 Mailing While Application Pending

.41 General. A publisher may not mail at controlled circulation rates until the application for controlled circulation privileges is approved by the Office of Mail Classification, Rates and Classification Department, USPS

Headquarters, Washington, DC. Postage at the applicable first-, third-, or fourth-class rates must be paid while the application is pending. *Exception:* If the publication is authorized to mail at second-class rates, the publisher may continue to pay second-class postage while the controlled circulation application for the publication is pending.

.42 Record of Postage Paid. If third- or fourth-class postage is paid through a trust account, the postmaster will keep a record of such mailings on Form 3503, *Record of Deposits Made While Second-Class or Controlled Circulation Application Is Pending.* No record will be kept on Form 3503 if postage is paid at first- or second-class rates or if postage is not paid through a trust account.

.43 Refund. If an authorization for controlled circulation mail privileges is issued and a record of the postage paid has been kept (see 541.42), the postmaster will be instructed to refund to the publisher the postage paid at third- or fourth-class rates in excess of the controlled circulation rate since the effective date of the authorizaiton.

Note: No refunds will be made:

a. If the application is denied;

b. If postage was paid at first- or second-class rates; or

c. For the period prior to the effective date of the authorization.

541.5 Effective Date. The effective date of the authorization is the date of the application if the publication was eligible for controlled circulation privileges on that date, or the date of eligibility if it became eligible after the date of application.

541.6 Appeal of a Denied Application. If the application is denied, the publisher may appeal the denial by writing to the postmaster at the office of application within 15 days of receipt of the notice of denial. The Director, Office of Mail Classification, will make a final ruling on the appeal.

542 Change in Title or Frequency

Publishers must submit written notification of changes in title and/or frequency to the postmaster of the office where controlled circulation privileges are authorized, with two copies of the publication showing the new title and/or frequency. The postmaster forwards the notification with one copy of the publication to the General Manager, Domestic Mail Classification Divisison, Office of Mail Classification, Rates and Classification Department, USPS Headquarters, Washington, DC 20260.

543 Revocation of Controlled Circulation Privileges

543.1 Notice By Postmaster. The Postal Service will revoke controlled circulation authorizations of publications which fail to meet the requirements in 521. Postmasters must notify the General Manager, Domestic Mail Classification Division, when a publication is discontinued, or when it fails to meet the requirements in 521 or the conditions set forth in its letter of authorization. Postmasters must include the publishers' current mailing address with any notice of discontinuance or failure to meet the requirements.

543.2 Determination. If it is determined that a publication is no longer qualified for controlled circulation privileges, the General Manager, Domestic Mail Classification Division, will notify the publisher and the postmaster at the office of entry of the revocation. The revocation will become effective 15 days from the receipt of the notice by the publisher unless a written appeal is filed with the postmaster. The postmaster will forward such appeals to the Director, Office of Mail Classification, for the final agency decision.

550 Physical Limitations

There are no physical limitations other than those contained in 521 for controlled circulation publications addressed to domestic destinations. Publication 42, *International Mail,* prescribes weight limits for mailings to foreign destinations.

560 Preparation Requirements

561 Identification Statements in Copies

561.1 Information Required. Copies of publications entered as controlled circulation mail and copies of publications awaiting approval of their application for controlled circulation privileges must have an identification statement conspicuously shown in type no smaller than can be easily read (1) on one of the first five pages (preferably in the masthead) or (2) in the masthead on the editorial page (provided the location of the editorial page is shown on the front page of the publication in the table of contents). The identification statement must contain all of the following items:

a. Name of Publication and Publication Number. The publication number includes an alpha prefix and is to be within parentheses immediately following or below the name of the publication, for example, *MANAGING WIDGETS* (USPS 123-456). The publication number will be furnished by the Office of Mail Classification, Rates and Classification Department, USPS Headquarters and must be included within 90 days of the notification. The publication number may be omitted if it appears on the front/cover page.

b. Date of Issue. The date of issue may be omitted if it appears on the front/cover page.

c. Statement of Frequency.

d. Issue Number. Every issue of each publication should be numbered consecutively. The consecutive numbering of published issues may not be broken by assigning numbers to issues unavoidably omitted. The issue number may be omitted if it appears on the front/cover page.

e. Subscription Price. If the publication has one.

f. Name and Address of Known Office of Publication. Including street number, street name and ZIP Code. The street name and number are optional if there is no letter carrier service. *The known office of publication* must be clearly distinguishable from the names of other offices of the publication.

g. Controlled Circulation Imprint. Which reads "Controlled Circulation Postage Paid at ———." If a publication is authorized to be mailed at two or more offices, the imprint must read "Controlled Circulation Postage Paid at ——— and at ———." OR *Notice of Pending Application.* If copies are mailed under deposits of money while an application is pending, a notice must be included which reads "Application To Mail At Controlled Circulation Postage Rates Is Pending At ——— (and at ———)."

h. Mailing Address For Change of Address Orders. A statement in normal text type of the publication, indicating where change of address orders are to be sent, which reads: "POSTMASTER: Send address changes to (Publication name and mailing address)". Follow 562.3 in preparing publications which are wrapped.

561.2 Sample Format. The following is an example of an appropriate identification statement format:

"MANAGING WIDGETS (USPS 123-456) is published daily except Sundays and holidays for $28 per year by Business Ideas Co., 44 South Street, Hyattsville, MD 20784. Controlled circulation postage paid at Hyattsville, MD.

POSTMASTER: Send address changes to *MANAGING WIDGETS,* P.O. Box 4, Boulder, CO 80302."

561.3 Known Office of Publication. In the example (561.2) the publisher's *known office of publication* is located in Hyattsville, Maryland where circulation records must be available for postal

examination. The fulfillment office is located at Boulder, Colorado.

561.4 Wrapped Publications. When a controlled circulation publication is wrapped for mailing, a printed or handstamped notice of entry as in 561.1g must appear on the envelopes or wrappers in which the copies are mailed. Follow 562.2 in preparing publications in wrappers and envelopes for mailing.

561.5 Mailed From More Than One Office. When the same controlled circulation publication is mailed from more than one post office, the publisher may show the name of each post office where it is mailed provided the correct USPS publisher number appears immediately following the post office name. *Example:*

"*MANAGING WIDGETS* (USPS 123–456) is published daily except Sundays and holidays for $28 per year by Business Ideas Co., 44 South Street, Hyattsville, MD 20784. Controlled circulation postage paid at Hyattsville, MD (USPS 123–456); Dayton, OH (USPS 326–491); Youngstown, OH (USPS 864–224); Cleveland, OH (USPS 543–721).

"POSTMASTER: Send address changes to *MANAGING WIDGETS*, P.O. Box 30204, Boulder, CO 30302."

562 Preparation

562.1 Folding. Publishers are encouraged to fold publications to a size not larger than 11¾ by 14½ inches, when practical. A quarter fold in newspaper size publications or a one-half fold in tabloid or other smaller publications should normally achieve these dimensions. *Publications should not be rolled.*

562.2 Wrapping

.21 Individually addressed copies not wrapped or tied together as a package by the mailer as required by 564.1, must be enclosed in wrappers or envelopes.

.22 All single copies addressed to Army or Air Force post offices must be enclosed in wrappers or envelopes.

.23 Publishers are encouraged to place publications of small size or of flimsy nature in envelopes.

.24 White or other light-colored paper must be used for wrapping. Old newspapers may not be used.

.25 Controlled circulation mail must be prepared so that it can be easily examined. Mailing of publications at the controlled circulation rate of postage is consent by the sender to postal inspection of the contents, whether loose or inserted in envelopes, wrappers, or other covers. Mailers who want to insure that publications are not opened for postal inspection must pay first-class rates of postage and should plainly mark *First-Class* or some similar endorsement on the envelope, wrapper, or cover used.

562.3 Addressing

.31 Each piece including the top copy of a firm package (see 564.11) must bear the name and address of the subscriber. The address must include the ZIP Code. *Exception:* the ZIP Code may be omitted from pieces bearing a simplified address in accordance with 122.41.

.32 The name of the post office and State should be the most prominent part of the address.

.33 All pieces should be addressed in a legible hand or plain type not smaller than 10 point. Black or other strongly contrasting ink should be used. Addresses should not be written in pencil.

.34 White or other light-colored paper must be used for address strips.

.35 Addresses, including address strips, must be placed in a visible position either on the wrapper or envelope or directly on the copies. When the address is placed on the wrapper, it must appear on a flat side and never on the fold.

.36 Addresses must be placed on the front or back cover so that they may be easily read. It is suggested they be placed so that when the bound (or folded) edge is grasped in the right hand, the address should be along the bound edge or the top edge near the bound edge as illustrated in Exhibit 562.36.

563 Marking

563.1 Notice of Entry. Sealed or unsealed envelopes used as wrappers and sealed covers must show a notice of entry in the upper right corner of the address area. The upper left corner must show the name of the publication followed immediately by the publication number furnished by the Office of Mail Classification, Rates and Classification Department, USPS Headquarters and the mailing address to which undeliverable copies or change of address notices are to be sent. The publication number includes an alpha prefix and is to be within parantheses; for example, *THE NATIONAL WEEKLY* (ISSN 9876–543X) or *THE COMMUNITY JOURNAL* (USPS 123–456). See 561.1f and 563.3 for additional instructions. An alternative to printing these required endorsements on the wrapper is to print them directly on the outside of the publication, provided they can be readily recognized and easily read when the wrapper is in place. This permits the use of clear plastic wrappers and opaque sleeves which only partially cover the publication.

563.2 Return Postage Guaranteed. Publishers who desire return postage guaranteed service must mark their publications as described in 593.

563.3 Requests for Change of Address. Publishers may place requests for change of address information from subscribers on wrappers or envelopes containing copies of controlled circulation publications. A statement reading substantially as follows may be printed on the wrappers or envelopes:

Moving? Send the address label with your corrections to: (name and address of publisher).

564 Presort Requirements (See Exhibit 564)

564.1 Packaging Requirements

.11 **Firm Packages.** When there are two or more copies for the same address, they must be made up into one package if only one piece rate is paid for the group. Affix blue label F (see 564.19).

.12 **5-Digit Packages.** When there are six or more copies for the same 5-digit ZIP Code destination, they must be made up into 5-digit packages. Mailers are encouraged to, but are not required to, affix red label D.

.13 **Loose Packing.** Management sectional center (MSC) managers may authorize *loose packing* of copies in full No. 3 sacks without bundling when all material in a sack goes to the same 5-digit ZIP Code. Copies must be placed to maintain orientation of the pieces while in transit. Mailers desiring to loose pack copies must make requests through the post office of mailing. *Note:* the terms *loose pack* or *loose packing* refer to the placement of unbundled, unbound mail pieces in a receptacle such as a mail sack.

.14 **Mixed City Packages.** When there are six or more copies for the same multi-ZIP Coded post office remaining after the required 5-digit packages have been made, they must be made up into mixed city packages. Affix yellow label C.

BILLING CODE 7710-12-M

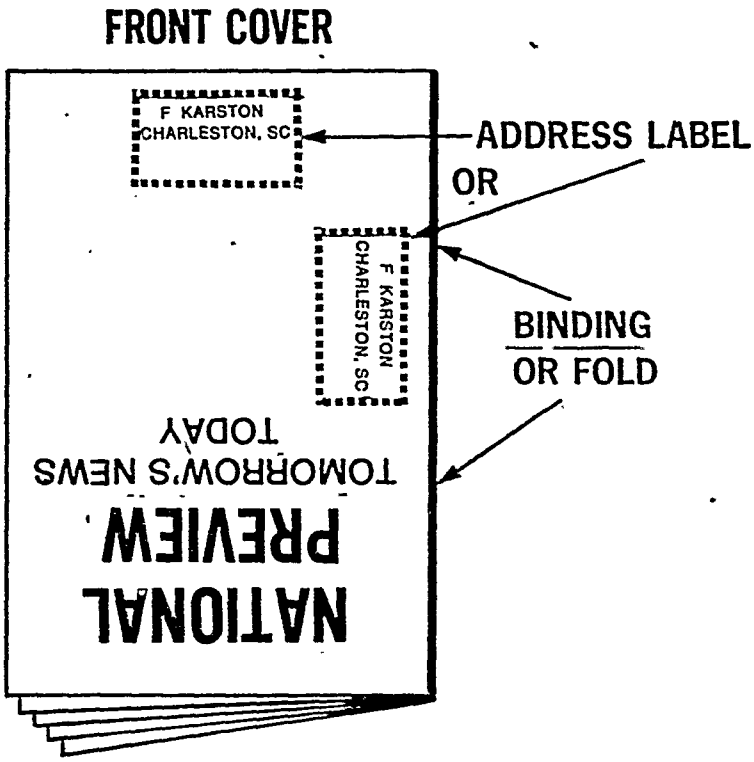

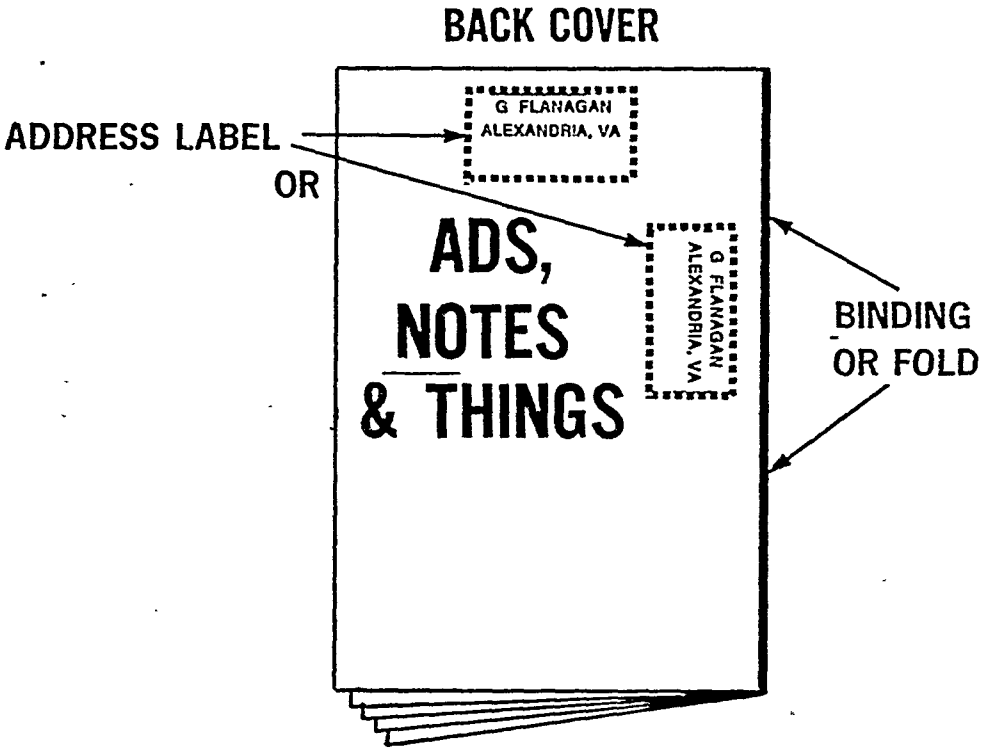

Exhibit 562.36—Placement of Address

BILLING CODE 7710-12-C

.15 **Sectional Center Facility (SCF) Packages.** When there are six or more copies for post offices in the same SCF delivery area remaining after the required 5-digit or mixed city packages have been made, they must be made up into SCF packages. Affix green label 3.

.16 **State Packages.** When there are six or more copies for a State remaining after the required 3-digit packages have been made, they must be made up into state packages. Affix orange label S. Individual copies in state packages must be wrapped in accordance with 562.2.

.17 **Mixed State Packages.** Copies remaining after all of the packages have been made as outlined above, must be made up into a mixed state package. Attach a mixed state white facing slip. Individual copies in mixed state packages must be wrapped in accordance with 562.2.

.18 **Facing.** All copies in a package must be faced the same way with an address visible on the top copy.

.19 **Package Labels.** Pressure sensitive package labels must be applied to the lower left corner of the address side of the top copy on letter size packages and next to the address on larger packages. Facing slips must be placed on the address side of the top copy in mixed state and foreign packages. Pressure sensitive labels and facing slips are available from post offices.

564.2 Sacking Requirements

.21 **General.** Except where bundling or palletizing is authorized (see 564.3 or 564.4), packages must be placed in sacks when matter addressed to the same 5-digit ZIP Code, the same mixed city, the same SCF delivery area, or the same state distribution center weighs 20 pounds or more or is 1,000 cubic inches or more in volume. However, no more than 70 pounds may be placed in any sack.

.22 **5-Digit Sacks.** When there are 20 pounds or 1,000 cubic inches of material addressed to the same 5-digit destination, packages must be made up into 5-digit sacks. The sacks must be labeled in the following manner:

Line 1: City, State and 5–Digit Destination
Line 2: Contents (ORD P)
Line 3: Office of Mailing
Sample:

PHILADELPHIA PA 19118
ORD P
BOSTON MA

.23 **Mixed City Sacks.** When there are 20 pounds or 1,000 cubic inches of material addressed to the same multi-ZIP Coded post office after making up 5-digit sacks, the packages must be made up into mixed city sacks. The sacks must be labeled in the following manner:

a. Mixed city with unique 3-digit ZIP Code Prefix
Line 1: City, State and 3–Digit Prefix
Line 2: Contents
Line 3: Office of Mailing
Sample:

PHILADELPHIA PA 191
ORD P
BOSTON MA

b. Mixed city without a unique 3-digit ZIP Code Prefix
Line 1: City, State and Lowest ZIP Code
Line 2: Contents
Line 3: Office of Mailing
Sample:

OAK LAWN IL 60453
ORD P
BOSTON MA

.24 **SCF Sacks.** When there are 20 pounds or 1,000 cubic inches of packages addressed to post offices in the same SCF delivery area, after making up 5-digit or mixed city sacks, the packages must be made up into SCF sacks. The sacks must be labeled in the following manner:

Line 1: Name & State of SCF, principal 3-digit ZIP-Code Prefix
Line 2: Contents
Line 3: Office of Mailing
Sample:

SCF PHILADELPHIA PA 190
ORD P
BOSTON MA

A list of all SCF's, the first three digits of all ZIP Codes served by these facilities, and the principal 3-digit ZIP Code prefixes that are to be used on SCF sack labels is contained in Publication 65, *National ZIP Code and Post Office Directory.*

.25 **State Sacks.** When there are 20 pounds or 1,000 cubic inches of packages addressed to the same State remaining after SCF sacks have been prepared, the packags must be made up into state sacks. The sacks must be labeled in the following manner:

Line 1: Name of State Distribution Center for State of Destination
Line 2: Contents and State
Line 3: Office of Mailing
Sample:

DIS KANSAS CITY MO 640
ORD P MO
SAN FRANCISCO CA

.26 **Mixed State Sacks.** Packages remaining after state sacks have been prepared, must be made up into mixed state sacks. The sacks must be labeled in the following manner:

Line 1: Mixed States Distribution Location
Line 2: Contents
Line 3: Office of Mailing Sample:

DIS CHICAGO IL 606 ORD P MIXED STATES CHICAGO IL

564.3 Bundling Instead of Sacking

.31 **Regional Authorization**

.311 The Regional Postmaster General for the post office of mailing may authorize dispatch of controlled circulation mail in bundles outside of mail sacks if such separation is beneficial to the Postal Service. The publisher must submit an application to the postmaster where the mail is to be deposited. The following information must be furnished with the application:

a. Name of publication and frequency of mailing;

b. Identity of post offices to which shipments will be made; and

c. Approximate quantity of copies and number of bundles to each office.

d. Mode of transportation to be used.

.312 The postmaster will forward the application to the Regional Postmaster General with a detailed explanation of the transportation and processing arrangements. The application will be reviewed by the General Manager, Logistics Division, and by others concerned in that region and in any other region which will process the mail in order to determine whether intermediate or destination offices are capable of receiving and processing the bundles without increasing overall processing costs. The Regional Postmaster General will notify the postmaster at the office where the mail is to be entered whether the application has been approved or, if not, the reason for denial. The postmaster will send a notice of the decision to the mailer.

.32 **Bundling Requirements.** Mailers bundling instead of sacking publications must observe the following procedures:

a. Presort by ZIP Code. Mailers must presort publications by ZIP Code separations as required by 564.1.

b. Prepared Like Sacks. Bundles must be prepared on the same basis as sacks (see 564.2) and individual separations within a bundle must be appropriately wrapped or tied to maintain the identity of the separation. The number of bundles should not exceed the number of sacks which would otherwise be used in a mailing, except when those bundles are used in an approved palletizing mailing. This may require bundling up to the 40 pound maximum when volume warrants and the mailing is not palletized.

c. Weight and Numbers. The weight of a bundle must not exceed 40 pounds and the minimum number of copies in a bundle may not be less than 20 pounds or 1,000 cubic inches in volume. Lesser quantities must be included in bundles for the next lower level of sortation.

d. Labeling. All bundles must be appropriately labeled on top to show destination and contents as required with sacks. Similarly, each separation within a bundle must be identified by labels in accordance with 564.19.

e. Machinable Mailings. Mailings must be machinable by Postal Service sack-sorting equipment unless they consist of publications intended only for local delivery area (same 3-digit ZIP Code prefix). It is the responsibility of the mailer to satisfy the Postal Service that mailings are machinable. This can be verified by having the mailing post office test process ten or more production bundles on two or more passes through a Bulk Mail Center (BMC). Ordinarily, bundles require cross strapping and heavy-gauge shrink or stretch wrap to insure their integrity in the mailstream.

f. Local Processing and Delivery. When controlled circulation publications are entered for local processing and delivery (i.e. without being routed through a BMC) they need not meet the requirements of 564.32e. However, bundles must be securely bound to withstand handling without breakage or damage and to prevent injury to postal personnel or damage to mechanized sorting systems. If wire is used it must have rounded edges and flat ends. Binding material must be applied at least once around the length and girth. The use of metal strapping is discouraged because of its possible hazards.

564.4 Palletizing instead of Sacking

.41 Regional Authorization. The Regional Postmaster General for the post office of mailing may authorize the dispatch of controlled circulation mail on pallets without mail sacks, if such preparation is beneficial to the Postal Service. Applications for palletizing instead of sacking must be made and processed as prescribed for bundling in 564.31.

.42 Palletizing Requirements. Mailers palletizing instead of sacking publications must observe the following procedures:

a. Mailers must presort publications and prepare packages as prescribed by 564.1. The Regional Postmaster General may waive packaging requirements for 5-digit ZIP Code pallets when mailers effectively demonstrate that they will prepare pallets to remain intact to destination.

b. Pallets must be made up as 5-digit ZIP Code, mixed city, SCF, state or mixed state pallets when the mail load to a destination is either 650 pounds or three feet high. Pallets must not contain more than 2,000 pounds of mail nor more than one zone.

c. Pallets must be labeled in the format described in 564.2. These labels must be at least five inches by nine inches in size with characters at least one inch high.

BILLING CODE 7710-12-M

HOW TO PREPARE CONTROLLED CIRCULATION MAIL

Pieces qualifying for the rate MUST be prepared in the following sequence:

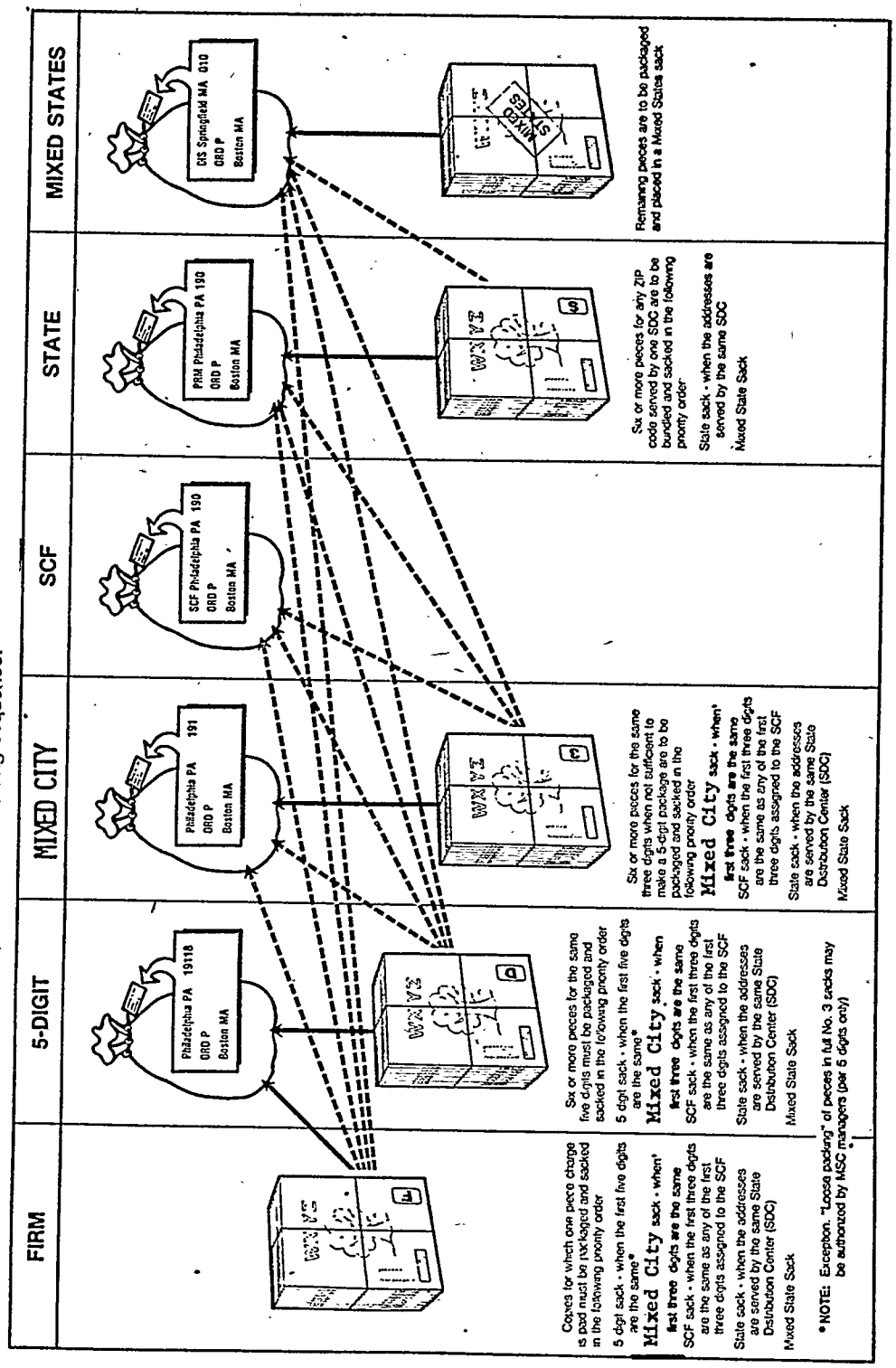

Exhibit 564

564.5 Copies for Military Post Offices Overseas

.51 Direct Packages. When more than one copy is addressed to one unit, APO, or Navy or Marine Corps address (see 122.8), the copies must be securely wrapped in packages or tied in bundles labeled for the military address.

.52 Mixed Packages. After all direct packages have been made, if there are more than five copies remaining for dispatch through any postal concentration center, they must be wrapped in packages or tied in bundles and labeled for the center.

.53 Direct Sacks. When there are a sufficient number of packages and bundles for one unit, APO, or Navy or Marine Corps address to fill approximately one-half of a No. 2 sack, a direct sack must be made up. Direct sacks will not be opened at postal concentration centers. The sack should be labeled in the following manner:

Line 1: Postal Concentration Center Designation, City, State, 3-digit ZIP Code Prefix

Line 2: Contents, APO or FPO Designation and 5-digit ZIP Code.

Line 3: Publication Title, Office of Mailer

Sample:

PCC NEW YORK NY 110
ORD P APO 09360
THE RECORDER NEW YORK NY

.54 Mixed Sacks When the quantity is insufficient for a direct sack but there are enough bundles or packages for dispatch through one postal concentration center to fill approximately one-half of a No. 2 sack, a sack must be made up for that center and labeled in the following manner:

Line 1: Postal Concentration Center Designation, City, State, 3-digit ZIP Code Prefix

Line 2: Contents, APO or FPO Designation for MAIL

Line 3: Publication Title, Office of Mailing

Sample:

PCC SAN FRANCISCO CA 962
ORD P APO MAIL
THE RECORDER NEW YORK NY

570 Mailing

A publication mailed at controlled circulation rates must be mailed at the post office of entry specified in its controlled circulation authorization. Mailings must be made between the times and at the locations designated by the postmaster.

580 Payment of Postage

581 Payments in Advance of Dispatch

Postage must be fully prepaid before controlled circulation mailings are dispatched. Payment must be made through an advance deposit account established at the post office of mailing. The post office will issue receipts for advance deposit account payments.

582 Mailing Statement

582.1 Submitting Form 3541-A. Controlled circulation postage must be computed on Form 3541-A, *Statement of Mailing—Controlled Circulation Publications* (see Exhibit 582). The publisher must submit a properly completed Form 3541-A at the time of mailing.

MAILER MUST FILL IN ALL UNSHADED BLOCKS

FINANCE NO.	U.S. POSTAL SERVICE	MAILING DATE
00-0000	STATEMENT OF MAILING CONTROLLED CIRCULATION PUBLICATIONS	08 01 79

POST OFFICE AND STATE	ZIP CODE	PUB NO	NAME OF PUBLICATION
Springfield, VA	22150		Iron and Steel Review

DATE OF ISSUE PRINTED IN COPIES	FREQUENCY OF ISSUE	SIGNATURE OF MAILER
Aug 1979	Monthly	Thomas Hughes

AVERAGE NO. COPIES PER ISSUE		12,5000 LBS	PO WEIGHT PER COPY	12,5000 LBS
1 DOMESTIC		100,000	TOTAL WEIGHT	12,500 LBS
	TOTAL PO WEIGHT	12,500	15% [illegible]	$1,912.50
	[illegible]	100,000	[illegible]	$5,800.00
2 FOREIGN		50	RATE PER COPY	13 $ 6.50
TOTAL POSTAGE CHARGE				$ 7,719.00

I certify that the statements made by me above are correct. I understand that anyone who furnishes false or misleading information on this form or who omits material information requested on the form may be subject to criminal sanctions (including fines and imprisonment) and civil sanctions (including multiple damages and civil penalties). Signature of Postal Representative: Hackel Alexander

*Number of copies mailed: 1 [illegible]

PS Form 3541 A — FINANCIAL DOCUMENT—FORWARD TO FINANCE OFFICE

Exhibit 582—Form 3541-A Statement of Mailing-Controlled Circulation Publications

582.2 Mailing While Application Pending. Publishers mailing at third- or fourth-class rates under a trust fund account while their application is pending (see 541.4) must submit Form 3541-A with each mailing, with the words *Pending Application* noted on the form. In addition to all requested information, the form must contain a notation of the third- or fourth-class rate used to compute the postage placed in trust, and an explanation of how that rate was computed.

582.3 Computing Average Weight. The average weight per copy entered on the Form 3541-A must include the weight of any string, rubber bands, straps, wrapping, etc., used to prepare the packages required by 564.1. Compute the average weight by weighing a selected number of packages which appear to be representative of the total mailing. Divide the weight of these packages by the number of copies in the packages. Record fractions of pounds to six decimal places.

583 Marked Copy

The publisher must submit a copy of the issue being mailed with each mailing statement. The publisher must mark this copy so the advertising content can be verified. Advertising is defined in 522. The publisher must also indicate, on the first page of each marked copy, the total units and percentage of space devoted to advertising and nonadvertising material. This may be expressed in column inches, square inches, pages, or any other recognized units of measure.

584 Statistical Statement

Publishers mailing controlled circulation publications must complete Form 8-C, *Pieces by Destination, Controlled Circulation Publication*, and submit it to the postmaster with the mailing statement (Form 3541-A) for the first mailing of each fiscal year. Form 8-C must also be submitted with the

mailing statement for the first mailing at a new post office of entry, after the controlled circulation authorization has been received. Forms 3541–A and 8–C are distributed to publishers by their postmasters. If the publisher fails to submit Form 8–C, the Postal Service will refuse to accept the publisher's mailing.

585 Mailer's Records

Mailers must maintain records adequate to verify the number and weight of copies reported on Forms 3541–A. These records are subject to periodic audit by the Postal Service.

590 Ancillary Services

591 Forwarding

591.1 Local Change of Address. When there has been any kind of a change in the local address, copies of controlled circulation publications bearing the old local address will be delivered to the new local address without charge for three months. This procedure will be followed whether or not the copies bear the sender's request for return. The term *local address,* as used in this section, means any address served by the city, rural, or highway contract carriers of any specific post office or a post office box or general delivery address at the same post office. Form 3576, *Change of Address Notice to Correspondents, Businesses, and Publishers,* will be furnished to the addressee at the new local address, and the addressee will be requested to use it promptly to give the sender the new local address.

591.2 Non-Local Change of Address

.21 Guarantee to Pay Forwarding Postage. When a change of address is other than a change of local address, and the addressee has filed a written guarantee (on Form 3575, *Change of Address Order,* or by other means) to pay forwarding postage, the copies of controlled circulation publications bearing the old address will be forwarded to the new address for three months rated with postage due at the single piece third-class rate or the fourth-class rate according to the weight of each individually addressed copy or package of unaddressed copies. Form 3576 will be furnished to the addressee at the new address.

.22 Failure to Guarantee. When a change of address is other than a local change of address and the addressee has not filed a written guarantee to pay forwarding postage, copies of controlled circulation publications bearing the old address will not be forwarded, but will be disposed of by the Postal Service.

592 Address Correction Service

592.1 Notifying Publishers. The addressee's new address, or the reason why a controlled circulation publication is undeliverable if the new address is not known, will be furnished to the publishers by the Postal Service. This service is mandatory for all controlled circulation publications, and the address correction service fee must be paid for each notice issued (see 512.1).

592.2 Sending Notification. Address correction service will be provided for the first issue after three months when the publication is undeliverable due to a change in the local address. When copies of the publication are undeliverable for any reason other than a change in the local address, the address correction notice will be prepared for the first undeliverable copy of the publication received. Unless copies of the publication are to be forwarded under 591 or returned under 593, copies received after the address correction notice is mailed will be disposed of as waste.

593 Return

The publisher of a controlled circulation publication may request that copies which are undeliverable as addressed be returned if the publisher guarantees to pay the return postage. In order to receive this service, the words *RETURN POSTAGE GUARANTEED* must be printed on the envelopes or wrappers, or on one of the outside covers of unwrapped copies, immediately preceded by the sender's name and address, including ZIP Code. The rate charged for return is the single piece third-class rate or the fourth-class rate, according to the weight of each individually addressed copy or package of unaddressed copies. This rate charge is in addition to the charge for the address correction notice.

CHAPTER 6

Third-Class Mail

610 Rates and Fees

611 Rates

611.1 Single Piece Rates

.11 General. The single piece rates are applied to each piece according to its weight.

The single piece rates are:

0 to 2 ozs	20¢
Over 2 to 4 ozs	40¢
Over 4 to 6 ozs	53¢
Over 6 to 8 ozs	66¢
Over 8 to 10 ozs	79¢
Over 10 to 12 ozs	92¢
Over 12 to 14 ozs	$1.05
Over 14 but less than 16 ozs	$1.18

.12 Exception. When the postage rate computed at the single piece third-class rate is higher than the rate prescribed in the corresponding fourth-class category for which the piece qualifies (see 710), the applicable lower fourth-class rate is charged.

611.2 Bulk Rates (See Exhibit 611.2)

611.3 Minimum Bulk Rate Postage. The total postage paid on any bulk mailing may not be lower than the amount determined by multiplying the minimum rate per piece by the total number of pieces in the mailing. If the total postage computed at pound rates is less than the minimum postage charge, postage must be computed at the minimum rate per piece.

611.4 Keys and Identification Devices. Keys and identification devices such as identification cards or identification tags that are without cover may be mailed at third-class rates if they bear, contain, or have securely attached the name and complete post office address of a person, organization, or concern, with instructions to return to such address and a statement guaranteeing the payment of the postage due on delivery. They are charged 32¢ for the first 2 ounces and 18¢ for each additional 2 ounces or fraction thereof.

611.5 Exception. When the postage computed at the bulk third-class rate is higher than a fourth-class rate, for which the matter and the mailing could qualify except for weight, the fourth-class rate may be paid without the necessity of adding needless additional weight. For example, a catalog weighing less than one pound which meets all prescribed requirements, other than weight, of fourth-class bound printed matter, may be mailed at the fourth-class bound printed matter rate. All other requirements of bulk third-class remain applicable.

612 Fees

612.1 Annual Bulk Mailing Fee. The annual bulk mailing fee is $40.

612.2 Address Correction Service Fee. The fee for address correction service is 25¢ per notice issued.

Bulk Rates

Type of mail matter	Regular rates		Special rates for authorized nonprofit organizations only (see 623)	
	Per pound or fraction	Minimum rate per piece	Per pound or fraction	Minimum rate per piece
A. Books and catalogs having 24 or more bound pages with at least 22 printed, and seeds, cuttings, bulbs, roots, scions, and plants. (See 651.1 for weight limits)..	36¢	8.4¢ (Applies when a piece weighs not more than 3.7333 oz. or .23333 pounds or 105.838 grams).	16¢	3.1¢ (Applies when a piece weighs not more than 3.0857 oz. or .19286 pounds or 87.479 grams).
B. All Matter (except items in A above) not included in first- or second-class. (See 651.1 for weight limits)..	41¢	8.4¢ (Applies when a piece weighs not more than 3.2780 oz. or .20488 pounds or 92.931 grams).	19¢	3.1¢ (Applies when a piece weighs not more than 2.5412 oz. or .15882 pounds or 72.041 grams).

Exception: When the postage computed at the bulk third-class rate is higher than a fourth-class rate—for which the matter and the mailing could qualify except for weight—the fourth-class rate may be paid without the necessity of adding needless additional weight.

For example: A catalog weighing less than 1 pound—which meets all prescribed requirements, other than weight, of fourth-class bound printed matter—may be mailed at the fourth-class bound printed matter rate.

All other requirements of bulk third-class remain applicable.

Exhibit 621.2 Third-Class

620 Classification

621 Description

621.1 General. Third class mail consists of matter which is:

a. Not mailed or required to be mailed as First-Class Mail;

b. Not entered as second-class mail; and

c. Less than 16 ounces in weight.

621.2 Circulars. Circulars, including printed letters which, according to internal evidence, are being sent in identical terms to more than one person, are third-class mail. A circular does not lose its character as such when a date and the name of the addressee and of the sender are written therein, nor by the correction in writing of typographical errors.

621.3 Printed Matter. Printed matter weighing less than 16 ounces may be sent as third-class mail. For the purpose of this section, printed matter means paper on which words, letters, characters, figures, or images, or any combination thereof not having the character of actual or personal correspondence, have been reproduced by any process other than handwriting or typewriting.

621.4 Sealing and Securing. Third-class mail must be prepared by the mailer so that it can be easily examined, but it should be sealed or secured so that it may be handled by machines. *Third-class mail is not sealed against postal inspections,* and the mailing of articles at third-class rates of postage is consent by the mailer to postal inspection of the contents, whether secured or not.

622 Third-Class Bulk Mail

622.1 Eligibility

.11 Mailings of at least 50 pounds or of at least 200 pieces, which are presorted to ZIP Code destinations in accordance with 663, are eligible for third-class bulk rates.

.12 All pieces in a bulk mailing must qualify for the same rate. For example, pieces eligible for the minimum per piece rate must not be included in the same bulk mailing with pieces eligible for the pound rate.

.13 If the pieces in a bulk rate mailing do not have identical weights, then they must all be of one characteristic type: i.e. letter sized, flats, or irregular parcels (formerly called SPR's).

622.2 Postage. Postage is computed at pound rates on the entire bulk mailing to be mailed at one time. *Exception:* In no case shall less than the minimum per piece charge be paid (see 611.3).

622.3 Merging and Presorting

.31 Mailers should merge and presort all third-class matter:

a. Presented for mailing at the same time; and

b. When the pieces are identical as to size and weight.

.32 Differences in text, use or nonuse of adhesive address labels, and the use of several address lists with differing key numbers do not prohibit the mailer from merging and presorting mailings.

622.4 Services Not Available. Registry, insurance, special delivery, special handling, certified, and COD services may not be used for third-class matter mailed at bulk rates.

622.5 [Reserved]

623 Special Bulk Rates

623.1 Authorization. Only organizations which meet the requirements of 623.2 or 623.3 and which have received specific authorization from the Postal Service may mail eligible matter at the special bulk rates contained in Exhibit 611.2. (See application procedure in 642.) A mailer must be issued a special rate authorization before it may mail at the special bulk rates.

623.2 Qualified Nonprofit Organizations

.21 General. The following organizations may be authorized to mail at the special bulk rates if they are not organized for profit and none of their net income inures to the benefit of any private stockholder or individual:

a. Religious

b. Educational

c. Scientific

d. Philanthropic

e. Agricultural

f. Labor

g. Veterans'

h. Fraternal

.22 Primary Purpose. The standard of *primary purpose* used in the definitions of qualified nonprofit organizations in 623.23 requires that the organization be both organized and operated for the primary purpose. Organizations which *incidentally* engage in qualifying activities do not meet the primary purpose test.

.23 Definitions of Eligible Nonprofit Organizations

.231 Religious. A nonprofit organization whose primary purpose is one of the following:

a To conduct religious worship (for example, churches, synagogues, temples, or mosques).

b. To support the religious activities of nonprofit organizations whose primary purpose is to conduct religious worship.

c. To further the teaching of particular religious faiths or tenents, including religious instruction and the dissemination of religious information.

.232 Educational. A nonprofit organization whose primary purpose is the instruction or training of individuals for the purpose of improving or developing their capabilities or the instruction of the public on subjects beneficial to the community.

Note: a. An organization may be educational even though it advocates a particular position or viewpoint as long as it presents a sufficiently full and fair exposition of the pertinent facts to permit an individual or the public to form an independent opinion or conclusion. Conversely, an organization is not considered educational if its principal function is the mere presentation of unsupported opinion.

b. Examples of educational organizations are: *(1)* An organization (such as a primary or secondary school, a college, or a professional or trade school) which has a regularly scheduled curriculum, a regular faculty, and a regularly enrolled body of students in attendance at a place where educational activities are regularly carried on.

(2) Any organization whose activities consist of presenting public discussion groups, forums, panels, lectures, or similar programs. Such programs may be on radio or television.

(3) Any organization which presents a course of instruction by means of correspondence or through the use of television or radio.

(4) Museums, zoos, planetariums, symphony orchestras, and similar organizations.

.233 Scientific. A nonprofit organization whose primary purpose is one of the following:

a. To conduct research in the applied, pure, or natural sciences.

b. To disseminate technical information dealing with the applied, pure, and natural sciences.

.234 Philanthropic (Charitable). A nonprofit organization organized and operated for purposes beneficial to the public.

Note: *a.* Examples of philanthropic organizations include those which are organized to:

(1) Relieve the poor and distressed or the underprivileged.

(2) Advance religion.

(3) Advance education or science.

(4) Erect or maintain public buildings, monuments, or works.

(5) Lessen the burdens of governments.

(6) Promote social welfare for any of the above purposes or to lessen neighborhood tensions; to eliminate prejudice and discrimination; to defend human and civil rights secured by law; or to combat community deterioration and juvenile delinquency.

b. The fact that an organization which is organized and operated to relieve indigent persons may receive voluntary contributions from those persons does not necessarily make it ineligible for special bulk rates as a philanthropic organization. The fact that an organization, in carrying out its primary purpose, advocates social or civic changes or presents ideas on controversial issues to influence public opinion and sentiment towards an acceptance of its views, does not necessarily made it ineligible for special bulk rates as a philanthropic organization.

.235 Agricultural. A nonprofit organization whose primary purpose is the betterment of the conditions of those engaged in agricultural pursuits, the improvement of the grade of their products, and the development of higher degree of efficiency in agriculture.

Note: a. The organization may further and advance agricultural interests through:

(1) Educational activities;

(2) Holding agricultural fairs;

(3) Collecting and disseminating information concerning cultivation of the soil and its fruits or the harvesting of marine resources;

(4) Rearing, feeding, and managing livestock, poultry, bees, etc.; or

(5) Other activities related to agricultural interests.

b. The term agricultural also includes any nonprofit organization whose primary purpose is collecting and disseminating information or materials related to agricultural pursuits.

.236 Labor. A nonprofit organization whose primary purpose is the betterment of the conditions of workers.

Note: a. Labor organizations include, but are not limited to, organizations in which employees or workers participate whose primary purpose is to deal with employers concerning grievances, labor disputes, wages, hours of employment, working conditions, etc.

b. Labor unions and employees' associations are examples of organizations formed for these purposes.

.237 Veterans's. A nonprofit organization of veterans of the armed services of the United States, or an auxiliary unit or society of, or a trust or foundation for, any such post or organization.

.238 Fraternal. A nonprofit organization which meets *all* of the following criteria:

a. Has as its primary purpose the fostering of brotherhood and mutual benefits among its members;

b. Is organized under a lodge or chapter system with a representative form of government;

c. Follows a ritualistic format; and

d. Is comprised of members who are elected to membership by vote of the members.

Note: Fraternal organizations include such organizations as the Masons, Knights of Columbus, Elks, and college fraternities and sororities, and may include members of either or both sexes. Fraternal organizations do not encompass such organizations as business leagues, professional associations, civic associations, or social clubs.

623.3 Qualified Political Committees

.31 General. The following political committees may be authorized to mail at the special bulk rates without regard to their nonprofit status:

a. A national committee of a political party

b. A state committee of a political party

c. The Republican Senatorial Campaign Committee

d. The Democratic Senatorial Campaign Committee

e. The Democratic National Congressional Committee

f. The National Republican Congressional Committee

.32 Definitions of Qualified Political Committees

a. National Committee

The organization which, by virtue of the bylaws of a political party, is responsible for the day-to-day operations of such political party at the national level.

b. State Committee

The organization which, by virtue of the bylaws of a political party, is responsible for the day-to-day operation of such political party at the state level.

623.4 Inelligible Organizations. The following and similar organizations do not qualify for the special bulk rates even though they may be organized on a nonprofit basis: automobile clubs; business leagues; chambers of commerce; citizens' and civic improvement associations; individuals; mutual insurance associations; political organizations (other than those specified in 623.3); service clubs such as Civitan, Kiwanis, Lions, Optimist, and Rotary; social and hobby clubs; associations of rural electric cooperatives; and trade associations. In general, State, county, and municipal governments are not eligible for the special bulk rates. However, a separate and distinct State, county, or municipal governmental organization which meets the criteria for any one of the specific categories in 623.2 may be eligible, notwithstanding its governmental status. For example, school districts and public libraries may be eligible under 623.232 (educational). Nevertheless, governmental organizations will normally not be eligible under 623.234 (philanthropic), since their income is generally not derived primarily from voluntary contributions or donations.

623.5 What May Be Mailed

.51 An organization authorized to mail at the special bulk rates may mail *only* its own matter at those rates. An organization may not delegate or lend the use of its permit to mail at the special bulk rates to any other person or organization.

.52 Cooperative mailings may not be made at the special bulk rates if one or more of the cooperating persons or organizations is not authorized itself to mail at the special bulk rates.

Cooperative mailings involving the mailing of matter in behalf of or produced for an organization not authorized to mail at the special bulk rates must be paid at the applicable regular rate. If customers disagree with a postmaster's decision that the regular rate of postage applies to a particular mailing, they may appeal the decision in accordance with 133. See Form 3602, *Statement of Mailing With Permit Imprints*, or Form 3602-PC, *Statement of Mailing—Bulk Rates*, for the certifications required of special bulk rate mailers for mailings made under this section.

623.6 Identification. All matter mailed at the special bulk rates must identify the authorized permit holder. The name and return address of the authorized permit holder must appear either on the outside of the mailing piece or in a prominent location on the material being mailed. Pseudonyms or bogus names of persons or organizations may not be used. If the mailing piece bears any name and return address, it must be that of the authorized permit holder. A well recognized alternative designation or abbreviation such as "The March of Dimes" or the "AFL-CIO" may be used in place of the full name of the organization.

624 Keys and Identification Items

The rate for keys and identification items placed loose in the mail under the conditions in 611.4 is applied to each item according to its weight.

625 Additions

The following written additions may be placed within or on material mailed at third-class postage rates:

a. The sender's and the addressee's names, occupations and addresses, preceded by the word "from" or "to", and directions for transmission, delivery, forwarding or return.

b. Marks (other than by written or printed words) to call attention to words or passages in the text.

c. Corrections of typographical errors in the body of circulars or printed matter by handwritten or typewritten changes or additions.

d. Corrections of proof sheets including corrections of typographical and other errors, changes in the text, insertion of new text, marginal instructions to the printer, and rewrites of parts. Corrections should be on margins or attached to the manuscript. Do not encluse manuscript of another article.

e. A simple manuscript dedication or inscription which does not have the nature of personal correspondence, on the blank leaves or cover of a book or other printed matter.

f. Matter mailable as third-class mail printed on the wrapper, envelope, tag or label.

g. Marks, numbers, names, or letters for the purpose of description of the contents.

h. The words "Please Do Not Open Until Christmas", "Happy Birthday, Mother", "With Best Wishes, John Doe", and similar inscriptions on the package, wrapper, envelope, or on a tag or label attached thereto.

i. An invoice, whether or not it also serves as a bill, if it relates solely to the matter with which it is mailed, may be enclosed or placed in an envelope (marked *Invoice Enclosed*) attached to the outside showing any or all of the following:

(*1*) Names and addresses of sender and addressee.

(*2*) Names and quantities of articles enclosed.

(*3*) Description of articles enclosed, including price, tax, style, stock number, size, and quality; and if defective, nature of defect.

(*4*) Order or file number, date of order, date and manner of shipment, shipping weight, and postage paid.

(*5*) Initials or name of packer or checker.

j. Instructions and directions for the use of the item mailed, in writing or otherwise, as an enclosure, attachment, or endorsement.

k. Handstamped imprints, except when the added material is in itself personal, or converts the original matter to a personal communication.

626 Enclosures

626.1 With Books and Catalogs Mailed at Bulk Rates

.11 General. External attachments are not permitted except as provided in 625 and 627. The covers of a catalog or book are, for Postal purposes, the outermost bound sheets. Only the following specifically named items may be enclosed loose, provided they relate exclusively to the book or catalog they accompany:

a. A single reply envelope or reply post card, or both.

b. A single order form.

c. A printed circular. Circulars fastened securely along the entire bound edge inside the book or catalog by paste, stitches, or staples *are not* loose enclosures.

d. If no circular is enclosed, a printed price list listing only articles featured in the catalog.

e. Samples of merchandise attached to pages.

.12 Invoices. An invoice whether or not it also serves as a bill relating solely to the matter with which it is enclosed may be enclosed or placed in an envelope (marked *Invoice Enclosed*) attached to the outside, showing any or all of the following:

a. Names and addresses of sender and addressee;

b. Names and quantities of articles enclosed;

c. Description of articles enclosed, including price, tax, style, stock number, size, and quality; and if defective, nature of defect;

d. Order or file number, date of order, date and manner of shipment, shipping weight, and postage paid; and

e. Initials or name of packer or checker.

626.2 With All Other Third-Class Matter. The following are permissible enclosures:

a. An invoice (see 626.12).

b. Manuscripts accompanying related proof sheets (see 625d).

c. Material listed in 625.

627 Attachments

627.1 To Books and Catalogs Mailed at Bulk Rates. The front cover page or the back cover page of a catalog or book may bear an attachment provided the following conditions are complied with:

a. The material must qualify for and be mailed at bulk rates. If the mailing piece and the attachment are subject to different rates, the higher bulk rate must be paid for both.

b. Pieces bearing attachments must be larger than 6 by 11 inches (too large to be distributed in a regular letter case).

c. The mailing must be presorted to carrier routes.

d. Attachments must be secured so as not to interfere with processing or delivery. Folded or multipage attachments must be secured to prevent opening during handling.

e. Each piece in the mailing must bear the same attachment.

627.2 To All Other Third-Class Matter. The front cover page or the back cover page of a mailing piece may bear an attachment provided the conditions of 627.1 are met.

628 Other Additions, Enclosures, and Attachments

Additions, enclosures, and attachments other than those permitted by 625, 626, and 627 are subject to the charges and procedures contained in 136.

630 Service Objectives

Third-class mail may receive deferred service. The Postal Service does not guarantee the delivery of third-class mail within a specified time.

640 Authorizations and Permits

641 Annual Fee—Bulk Rates

An annual bulk mailing fee must be paid once each calendar year by or for any person or organization which mails at the bulk third-class rates (see 612.1). Any person or organization which engages a business concern or another individual to mail for them must pay the fee. This fee is separate from the fee that must be paid for a permit to mail under the permit imprint system (see 145.2). The annual bulk mailing fee must be paid at or before the first bulk rate mailing of each calendar year.

642 Application to Mail at the Special Bulk Rates

642.1 Application Procedures

.11 Filing. Only organizations which meet the requirements of 623.2 (nonprofit organizations) or 623.3 (political organizations) and which have received specific authorization from the Postal Service may mail eligible matter at the special bulk rates in Exhibit 611.2. An application for authorization on Form 3624, *Application to Mail at Special Bulk Third-Class Rates for Qualified Nonprofit Organizations or Associations,* must be filed by the organization at the post office where mailings will be deposited. The applicant must indicate on the application form the qualifying category or categories of organizations under which it seeks authorization.

.12 Evidence of Qualification

.121 Qualified Nonprofit Organizations. An application filed by an organization seeking authorization as a qualified nonprofit organization must include evidence that the applicant meets the requirements of the qualifying category or categories in 623.2. In addition, the application must include evidence that the organization is nonprofit. A certificate of exemption from Federal income tax, if available, should accompany the application. An exemption from the payment of Federal income tax *is not required* in order to qualify for the special third-class bulk rates. Such exemption will be considered as evidence of qualification for preferred Postal rates, but will not be the controlling factor in the decision. When an organization submits proof that it has been granted Federal income tax exemption under Title 26, United States Code, section 501(c)(3), as a religious, educational, scientific, or philanthropic (charitable) organization; under section 501(c)(5) as an agricultural or labor organization; under section 501(c)(8) as a fraternal organization; or under section 501(c)(19) as a veterans' organization, it will be considered as qualifying for the special bulk rates unless other evidence discloses some disqualification.

.122 Qualified Political Committees. An application filed by an organization seeking authorization as a qualified political committee must include evidence that the applicant meets the requirements of one of the qualifying categories of political committees in 623.3. No evidence of nonprofit status need be submitted because qualified political committees are not required to be nonprofit.

642.2 Granting or Denying Applications. The postmaster will send the application (Form 3624) together with any supporting papers, to the local mail classification center (MCC). (Pending a decision, bulk mailings subject to the minimum per piece charge may be handled in accordance with 642.4.) The postmaster at the MCC will approve or deny the application. Additional information or evidence may be requested to support or clarify the application. Failure of an organization to furnish the information is sufficient reason to deny an application. The application Form 3624 and any supporting papers will be returned with the decision to the postmaster where the application was filed for notification of the applicant. Authorizations to mail at special bulk third-class rates shall be revoked for nonuse if no special mailings occur within a two year period.

642.3 Appeal Procedures. If the application is denied, the applicant can appeal the decision by submitting a written appeal to the postmaster where the application was filed within 15 days of the applicant's receipt of the decision. The local postmaster will forward the appeal to the MCC. If after a review of the file the postmaster at the MCC is still of the opinion that the organization does not qualify he will forward the complete file, including the original application and all supporting papers, and a statement of the reasons for his denial to the Domestic Mail Classification Division, Rates & Classification Department, USPS Headquarters, Washington, DC 20260. The General Manager, Domestic Mail Classification Division will make the final decision on the appeal and provide the postmaster at the MCC with a copy of the decision. The postmaster at the MCC will notify the applicant of the decision on the appeal and send him a copy of the decision. This copy must include a statement of the reasons for the decision.

642.4 Mailing While Application Pending

.41 General. An organization may not mail at the special rates until the application to mail at the special rates is approved. The postmaster may not accept mailings at the special rates for which an application is pending until an authorization is issued. Postage must be paid at the applicable first- or regular third-class rates (see Exhibit 611.2) while the application is pending.

.42 Record of Postage Paid. The postmaster will keep an accounting of the difference between postage paid at the regular bulk third-class rates and the postage that would have been paid at the special bulk third-class rates. No record will be kept if postage is paid at first-class or single-piece third-class rates.

.43 Refund. If an authorization to mail at special bulk rates is issued, the postmaster will refund to the mailer the postage paid at the regular bulk third-class rate in excess of the special rate since the effective date of the authorization.

Note: No refunds will be made:

a. If the application is denied and no appeal is filed;

b. If postage was paid at first-class or single-piece third-class rates; or

c. For the period prior to the effective date of the authorization.

.44 Effective Date. The effective date of the special rate authorization is the date of the application, if the organization was eligible to mail at the special rate on that date or the date of eligibility, if the organization became eligible after the date of application.

45. Appeal. If a proper appeal is filed (see 642.3), the mailer may continue to mail under an application pending status. The record of the postage paid will be continued, and action concerning a refund will be deferred until a final decision on the appeal is made.

643 Revocation

643.1 Notice of Revocation. An authorization to mail at the special rates will be revoked if the authorization was given to an organization which was not qualified at the time of application or which subsequently becomes unqualified. The postmaster at the MCC serving the office of mailing will notify the organization of the pending revocation of its authorization and of the reasons for the revocation. The

organization will be allowed 15 days to submit a written appeal to the postmaster at the office of mailing. If a timely appeal is not filed, the postmaster will revoke the authorization. If an appeal is filed, it will be sent through the MCC to the Domestic Mail Classification Division, Rates and Classification Department, USPS Headquarters, Washington, DC 20260. The decision on the continuance of the authorization will be made by the General Manager, Domestic Mail Classification Division. Notice of the decision and the reasons for the decision will be given to the organization through the postmaster.

643.2 Initiating a Review. A review of any organization authorized to mail at the special bulk rates may be initiated or undertaken at any time by the General Manager, Domestic Mail Classification Division. The General Manager may ask the organization for information or evidence to determine if the organization is still qualified. The organization's failure to furnish such information is sufficient reason to revoke its authorization. If the General Manager, after a review, determines that an organization is no longer qualified, he will notify the organization through the postmaster of the MCC of the proposed revocation of the authorization and the reasons for the revocation. The revocation becomes effective 15 days from receipt of the notice unless the organization files a written appeal with the Director, Office of Mail Classification, Rates and Classification Department, USPS Headquarters, Washington, DC 20260, who will issue the final agency decision.

643.3 Revocation for Nonuse.

An authorization to mail at the special bulk third-class rates shall be revoked by mail classification centers if no special rate mailings are made by the authorized organization during a two year period of time. The postmaster of the mail classification center who approved the application shall mail a copy of the notice of revocation for nonuse to the affected organization at the address shown on the application prior to the effective date. No administrative appeal is provided for a revocation for nonuse of an authorization.

650 Physical Limitations

651 Weight and Size Limits

651.1 Weight. Each piece must weigh less than 16 ounces.

651.2 Size, Shape, and Ratio

.21 Standards. There is no maximum size limit. The following standards apply to all material mailed at third-class rates other than keys and identification devices mailed in accordance with 611.4:

a. All mailing pieces must be at least 0.007 of an inch thick.

b. All mailing pieces which are ¼ of an inch thick or less must be:

(*1*) rectangular in shape,

(*2*) at least 3½ inches high, and

(*3*) at least 5 inches long.

Note: Third-class mailing pieces other than keys and identification devices which do not meet these minimum size standards are prohibited from the mails.

.22 Recommendation. To insure prompt and efficient processing of third-class mail, it is recommended that envelopes, cards and self-mailers have an aspect ratio of width (height) to length between 1 to 1.3 and 1 to 2.5 inclusive. (See 652 for nonstandard mail surcharge.)

652 Nonstandard Third-Class Mail

652.1 Size Limits. Third-class single piece rate mail weighing two ounces or less (except keys and identification devices as provided in 611.4) is nonstandard if it exceeds any of the following size limits:

a. Its length exceeds 11½ inches, or

b. Its height exceeds 6⅛ inches, or

c. Its thickness exceeds ¼ of an inch, or

d. Its aspect ratio (length divided by height) does not fall between 1 to 1.3 and 1 to 2.5 inclusive.

652.2 Delays. Nonstandard mail often results in delays or damage to mail because it does not lend itself to machine processing. For this reason, mailers are encouraged to avoid mailing nonstandard third-class mail.

652.3 Surcharge. A surcharge of 7 (seven) cents is assessed on each piece of nonstandard single piece rate third-class mail.

660 Preparation Requirements

661 Addressing

661.1 General. The general procedures for addressing are contained in 122.

661.2 ZIP Code. The address of each piece of bulk-rate mailings must include the ZIP Code. *Exceptions:*

a. The ZIP Code may be omitted from: pieces bearing a simplified address in accordance with 122.41; pieces presorted and bundled by the mailer to city, rural, or highway contract routes; and pieces presorted to 5-digit ZIP Code destinations consisting of either a post office having one ZIP Code or the ZIP Code delivery unit in multi-ZIP Coded post offices.

b. The lowest or principal ZIP Code assigned to a post office may be used on pieces addressed to any multi-ZIP Coded post office except those listed in 125. Mailers may obtain the lowest or pincipal ZIP Code for particular post offices from their postmaster.

662 Marking

662.1 Single Piece Rate. Each sealed piece mailed at the single piece third-class postage rate provided for by 611.1 must be legibly marked on the address side, preferably below the postage and above the name of the addressee, with the words *Third-Class*. The marking may be included as a part of a permit imprint, and it may be printed adjacent to the meter stamp by a postage meter. The marking will not be considered adequate if it is included as a part of a decorative design or advertisement.

662.2 Bulk Rates. The following identifying words must be printed or rubber stamped by the mailer either as part of or immediately adjacent to permit imprints, meter stamps, or precanceled stamps:

a. *Bulk Rate* or the abbreviation *Blk. Rt.* by mailers other than authorized special rate organizations;

b. *Nonprofit Organization* or the abbreviation *Nonprofit Org.* by authorized special rate organizations.

663 Preparation of Bulk Rate Mailings. (See Exhibit 663)

663.1 Standard Preparation Requirements

.11 Packaging Requirements

.111 5-Digit Packages. When there are ten or more pieces for the same 5-digit ZIP Code destination, they must be made up into 5-digit packages. Mailers are encouraged to, but are not required to, affix red label D (see 663.118).

.112 Loose Packing. Management Sectional Center (MSC) managers may authorize *loose packing* of pieces in full No. 3 sacks without bundling when all material in a sack goes to the same 5-digit ZIP Code. Pieces must be placed to maintain orientation of the pieces while in transit. Mailers desiring to loose pack pieces must make requests through the post office of mailing.

Note: the terms *loose pack* or *loose packing* refer to the placement of unbundled, unbound mail pieces in a receptacle such as a mail sack.

.113 Mixed City Packages. When there are 10 or more pieces for the same multi-ZIP Coded post office remaining after the required 5-digit packages have been made, they must be made up into

mixed city packages. Affix yellow lable C.

.114 **Sectional Center Facility (SCF) Packages.** When there are ten or more pieces for post offices in the same SCF delivery area remaining after the required 5-digit and mixed city packages have been made, they must be made up into SCF packages. Affix green label 3.

.115 **State Packages.** When there are ten or more pieces for a state remaining after the required 3-digit packages have been made, they must be made up into state packages. Affix orange label S.

.116 **Mixed State Packages.** Pieces remaining after all of the packages have been made as outlined above, must be made up into a mixed state package. Attach a mixed state white facing slip.

.117 **Facing.** All pieces in a package must be faced the same way with an address visible on the top piece.

.118 **Package Labels.** Pressure sensitive package labels must be applied to the lower left corner of the address side of the top piece on letter size packages and next to the address on larger packages. Facing slips must be placed on the address side of the top piece in mixed state and foreign packages. Pressure sensitive labels and facing slips are available from post offices.

.12 **Sacking Requirements**

.121 **General.** Except where bundling or palletizing is authorized (see 663.3 and 663.4), packages must be placed in sacks when matter addressed to the same 5-digit ZIP Code, the same mixed city, the same SCF delivery area, or the same state distribution center weighs 20 pounds or more or is 1,000 cubic inches or more in volume. However, no more than 70 pounds may be placed in any sack.

.122 **5-Digit Sacks.** When there are 20 pounds or 1,000 cubic inches of material addressed to the same 5-digit destination, packages must be made up into 5-digit sacks. The sacks must be labeled in the following manner:

Line 1: City and State and 5-Digit Destination
Line 2: Contents
Line 3: Office of Mailing
Sample:

PHILADELPHIA PA 19118
3C LETTER SIZE
BOSTON MA

.123 **Mixed City Sacks.** When there are 20 pounds or 1,000 cubic inches of material addressed to the same multi-ZIP Coded post office after making up 5-digit sacks, the packages must be made up into mixed city sacks. The sacks must be labeled in the following manner:

a. Mixed city with unique 3-digit ZIP Code Prefix
Line 1: City, State and 3-Digit Prefix
Line 2: Contents
Line 3: Office of Mailing
Sample:

PHILADEPHIA PA 191
3C FLAT SIZE
BOSTON MA

b. Mixed city without a unique 3-digit ZIP Code Prefix.
Line 1: City, State and Lowest ZIP Code
Line 2: Contents
Line 3: Office of Mailing
Sample:

OAK LAWN IL 60453
3C LETTER SIZE
BOSTON MA

.124 **SCF Sacks.** When there are 20 pounds or 1,000 cubic inches of packages addressed to post offices in the same SCF delivery area after making up 5-digit and mixed city sacks, the packages must be made up into SCF sacks. The sacks must be labeled in the following manner:

Line 1: Name and State of SCF, principal 3-digit ZIP Code Prefix
Line 2: Contents
Line 3: Office of Mailing
Sample:

SCF PHILADEPHIA 191
3C FLAT SIZE
BOSTON MA

Note: A list of all SCF's, the first three digits of all ZIP Codes served by these facilities, and the principle 3-digit ZIP Code prefixes that must be used on SCF sacks labels are contained in Publication 65, *National ZIP Code and Post Office Directory.*

.125 **State Sacks.** When there are 20 pounds or 1,000 cubic inches of packages addressed to the same State remaining after SCF sacks have been prepared, the packages must be made up into state sacks. The sacks must be labeled in the following manner:

Line 1: Name of State Distribution Center for State of Destination
Line 2: Contents and State
Line 3: Office of Mailing
Sample:

DIS KANSAS CITY MO 640
MO 3C LETTER SIZE
SAN FRANCISCO CA

.126 **Mixed State Sacks.** Packages remaining after state sacks have been prepared must be made up into mixed state sacks. The sacks must be labeled in the following manner:

Line 1: Mixed States Distribution Location
Line 2: Contents
Line 3: Office of Mailing
Sample:

DIS CHICAGO IL 606
MX STATES 3C FLAT SIZE
CHICAGO IL

663.2 Optional Preparation Requirements for Machinable Parcels

.21 **General.** Third-class parcels meeting the criteria of 128.4 can be processed on BMC parcel sorters and are referred to as machinable (regular) parcels. Mailers may, at their option, sort machinable (regular) parcels to 5-digit and BMC destinations rather than the destinations prescribed in 663.11.

.22 **Sacking Requirements**

.221 **5-Digit Sacks.** When there are 20 pounds or 1,000 cubic inches of material addressed to the same 5-digit ZIP Code area, they must be placed in 5-digit sacks. These sacks must be labeled in the following manner:

Line 1: City, State and 5-Digit Destination
Line 2: Contents
Line 3: Mailer, Office of Mailing
Sample:

PHILADELPHIA PA 19118
3C MACH P
FR JC COMPANY BOSTON MA

.222 **Destination Bulk Mail Center (BMC) Sacks.** After the required 5-digit ZIP Code area sacks have been prepared, the remaining pieces must be placed in sacks labeled to destination BMC areas, when there are 20 pounds or 1,000 cubic inches of material to a BMC area. These sacks must be labeled in the following manner:

Line 1: Destination BMC
Line 2: Contents
Line 3: Mailer, Office of Mailing
Sample:

BMC CHICAGO IL 608
3C MACH P
FR RD MAILINGS ATLANTA GA

.223 **Mixed BMC Sacks.** After the required 5-digit ZIP Code area and destination BMC sacks have been prepared, the remaining pieces must be placed in sacks labeled to the origin BMC in the following manner:

Line 1: Origin BMC
Line 2: Contents
Line 3: Mailer, Office of Mailing
Sample:

BMC KANSAS CITY MO 643
3C MACH P
FR WRIGHT CO TOPEKA KS

663.3 Bundling Instead of Sacking

.31 **Regional Authorization**

.311 The Regional Postmaster General for the post office of mailing may authorize dispatch of third-class

mail in bundles outside of mail sacks if such preparation is beneficial to the Postal Service. The mailer must submit an application to the postmaster where the mail is to be deposited. The following information must be furnished with the application:

a. Name of publication and frequency of mailing;

b. Identity of post offices to which shipments will be made; and

c. Approximate quantity of copies and number of bundles to each office.

.312 The postmaster will forward the application to the Regional Postmaster General with a detailed explanation of the transportation and processing arrangements. The application will be reviewed by the General Manager, Logistics Division, and by others concerned, in his region and in any other region which will process the mail in order to determine whether intermediate or destination offices are capable of receiving and processing the bundles without increasing overall processing costs. The Regional Postmaster General will notify the postmaster at the office where the mail is to be entered whether the application has been approved or, if not, the reason for denial. The postmaster will send notice of the decision to the mailer.

.32 Bundling Requirements. Mailers bundling instead of sacking mailings must observe the following procedures:

a. Presort by ZIP Code. Mailers must presort mail by ZIP Code separations as required by 663.1.

b. Prepared Like Sacks. Bundles must be prepared on the same basis as sacks (see 663.12) and individual separations within a bundle must be appropriately wrapped or tied to maintain the identity of the separation. The number of bundles should not exceed the number of sacks which would otherwise be used in a mailing, except when those bundles are used in an approved palletized mailing. This may require bundling up to the 40 pound maximum when volume warrants and the mailing is not palletized.

c. Weight and Numbers. The weight of a bundle must not exceed 40 pounds. A bundle must weigh at least 20 pounds or be of at least 1,000 cubic inches in volume. Less quantities must be included in bundles for the next lower level of sortation.

d. Labeling. All bundles must be appropriately labeled on top to show destination and contents as required with sacks. Similarly, each separation within a bundle must be identified by labels in accordance with 663.118.

e. Machinable Mailings. Mailings must be machinable by Postal Service sack-sorting equipment unless they consist of matter intended only for local area delivery (same 3-digit ZIP Code prefix). It is the responsibility of the mailer to satisfy the Postal Service that mailings are machinable. This can be verified by having the mailing post office test process ten or more production bundles on two or more passes through a bulk mail center (BMC). Ordinarily, bundles require cross strapping and heavy-guage shrink or stretch wrap to insure their integrity in the mailstream.

f. Local Processing and Delivery. Third-class pieces entered for local processing and delivery (i.e. without being routed through a BMC) need not meet the requirements of 663.32e. However, bundles must be securely bound to withstand handling without breakage or damage and to prevent injury to postal personnel or damage to mechanized sorting systems. If wire is used, it must have rounded edges and flat ends. Binding material must be applied at least once around the length and girth. The use of metal strapping is discouraged because of its possible hazards.

663.4 Palletizing Instead of Sacking

.41 Regional Authorization. The Regional Postmaster General for the post office of mailing may authorize the dispatch of third-class mail on pallets without mail sacks, if such preparation is beneficial to the Postal Service. Applications for palletizing instead of sacking must be made and processed as prescribed in 663.31.

.42 Palletizing Requirements. Mailers palletizing instead of sacking third-class material must observe the following procedures:

a. Mailers must presort pieces and prepare packages as prescribed in 663.1. The Regional Postmaster General may waive packaging requirements for 5-digit pallets when mailers effectively demonstrate that they will prepare pallets to remain intact to the destination.

b. Pallets must be made up as 5-digit ZIP Code, mixed city, SCF, state or mixed state pallets when the mail load to a destination is either 650 pounds or three feet high. Pallets must not contain more than 2,000 pounds of mail or mail addressed to more than one zone.

c. Pallets must be labeled in the format described by 663.12. These labels must be at least five inches by nine inches in size with characters at least one inch high.

663.5 Irregular Parcels (SPR's)

.51 Exemptions From Packaging Requirements

.511 Irregular parcels one-half inch or more in thickness need not be made up into packages (as required by 663.11) if the packages would be made up to the same destination as the sacks in which they would be placed. For example, ten or more such irregular parcels which are addressed to the same 5-digit destination need not be packaged if placed in a 5-digit sack; but they must be packaged if placed in a mixed city, SCF, state, or mixed state sack. Likewise, if there are ten pieces for the same SCF, but not to the same 5-digit or mixed city, they need not be packaged if placed in an SCF sack, but must be packaged if placed in a state or mixed state sack. Each separate bulk mailing which is commingled must meet the minimum piece or minimum weight requirements for bulk rates.

.512 Items which are so large that ten or less pieces fill a sack need not be packaged.

.52 Authorizing Commingling. Regional directors of finance may authorize the commingling of several permit mailings of irregular parcels in order to achieve a finer presort provided adequate means are available to ensure that proper postage is paid. This normally will require that the mailings be made under the provisions of 145.8 or 145.9.

.53 Waiving Bundling Requirements. When authorizing commingling, regions may waive the requirements for bundling to 5-digit and 3-digit destinations if doing so results in a finer make-up of at least 50% of the mail.

.54 Labeling Sacks. Sack labels for commingled irregular parcels must be identified with the words *3C COMM IRREG* on the second (contents) line.

664 Merchandise Samples

664.1 General. Merchandise samples which exceed 5 inches in width (height) or ¼ of an inch in thickness, or which are nonuniform in thickness, mailed at bulk third-class rates for general distribution on city delivery routes must be prepared by the mailer in accordance with 664.2–664.4.

664.2 Address Cards

.21 The address where the sample is to be delivered may not be placed on the sample. It must be placed on a separate address card to be delivered with the sample.

.22 The recipient's address, the mailer's return address, and the words, "This card was prepared for use in

delivering the accompanying postage paid sample," must be placed on the address card. The brand name, color coding, or other identifying symbols must also be placed on the address card to clearly associate it with the accompanying sample.

.23 Any printed addition on the card will require payment of separate third-class postage for the card.

.24 The address card must measure approximately (plus or minus ¼ of an inch) 3¾ inches by 7⅜ inches and must not be less than 0.007 of an inch thick.

.25 The address cards must be presorted, counted, and packaged by 5-digit ZIP Code delivery area. Each package of address cards must bear a label showing:

a. The post office of delivery;

b. The 5-digit ZIP Code delivery area;

c. The brand name of the merchandise sample;

d. The number of cards in the package; and

e. Instructions to open and distribute with matching samples.

664.3 Samples. The samples must be placed in cartons and labeled as follows:

a. The post office of delivery;

b. The 5-digit ZIP Code delivery area;

c. The brand name of the merchandise sample;

d. The number of samples in the outer carton; and

e. Instructions to open and distribute with matching cards.

664.4 Postage. Postage must be prepaid by one of the methods prescribed by 681.2 and must be printed on or affixed to the address card or sample.

664.5 Mailing Periods. Mailers should avoid mailing samples during the following peak mailing periods:

a. The last week of November and throughout the month of December;

b. From the first to the fifth and from the twenty-sixth to the end of each month.

665 Catalogs and Books

Catalogs and books with covers such as *outserts, short covers,* or similar bound sheets which do not fully cover (within ¾ of an inch of each edge) the main body of the catalog or book, front and back, must be enclosed in a mailing wrapper such as a full sleeve or envelope.

BILLING CODE 7710-12-M

HOW TO PREPARE THIRD-CLASS MAIL

Pieces qualifying for the rate MUST be prepared in the following sequence:

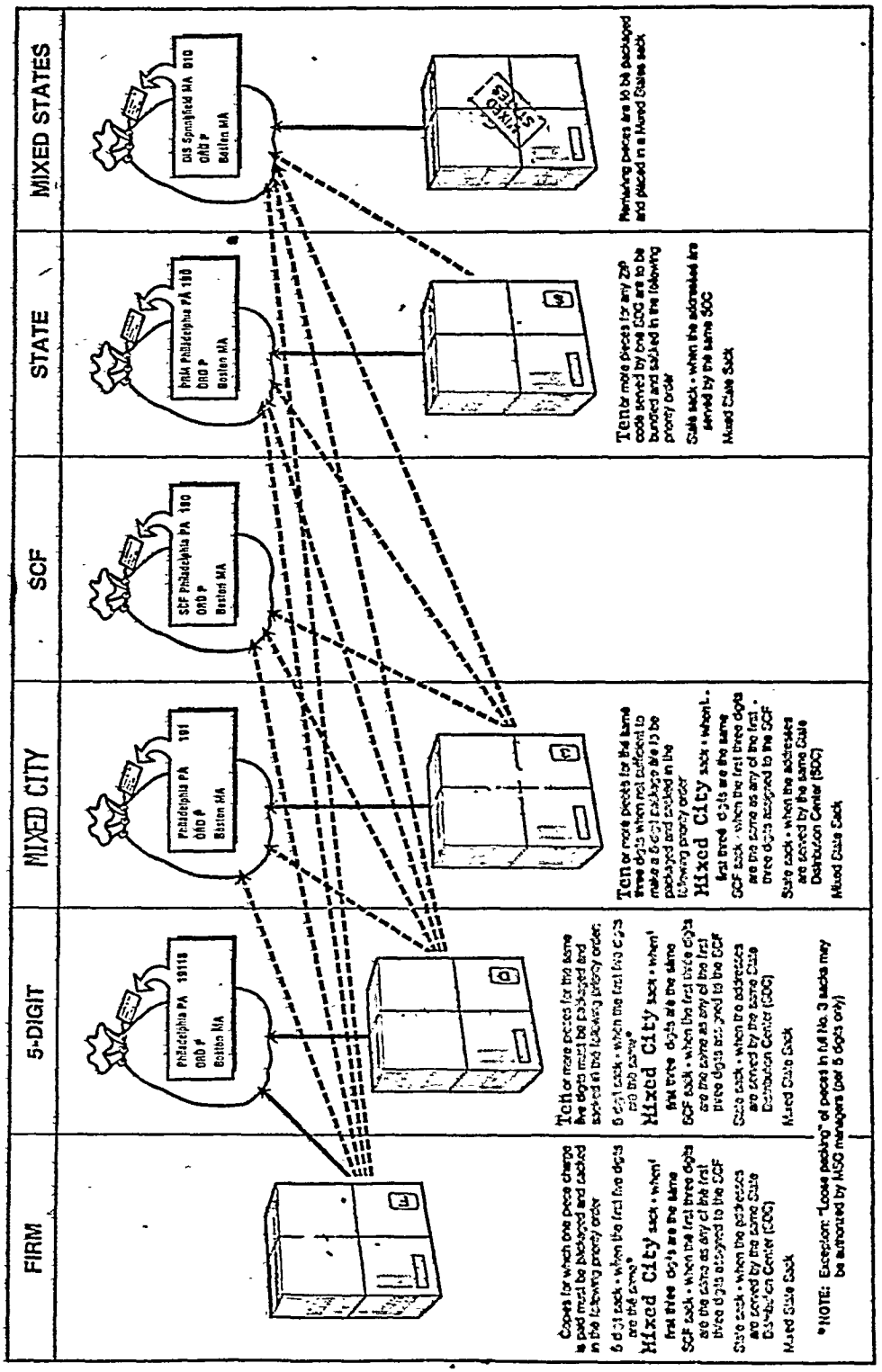

Exhibit 663

670 Mailing

671 Single Piece Rates

Matter mailed at the third-class single piece rate may be deposited in any street collection box, mail chute, receiving box, cooperative mailing rack, or other place where mail is accepted. However, mail which has postage paid by means of permit imprint may only be deposited where authorized by 145.

672 Bulk Rates

672.1 Regular Bulk Rates. Mailings at the regular bulk rates may only be made at a post office where the annual bulk mailing fee has been paid (see 641). Mail must be deposited at locations and times designated by the postmaster.

672.2 Special Bulk Rates. Mailings at the special bulk rates (for qualified nonprofit organizations and qualified political committees) may only be made at post offices where the annual bulk mailing fee has been paid (see 641) and where nonprofit authorization has been granted (see 642). Mail must be deposited at locations and times designated by the postmaster.

680 Payment of Postage

681 Method of Payment

681.1 Single Piece Mailings. Mailers of third-class mail at other than bulk rates may use any method of paying postage, and may mail any number of pieces at one time. *Exception:* When permit imprints are used, a minimum of 50 pounds or 200 identical pieces must be mailed (see 145).

681.2 Bulk Mailings

.21 Identical Weight Pieces. Postage may be paid by any of the following methods:

a. Meter stamps (see 144).

b. Precanceled stamps or precanceled stamped envelopes (see 143).

c. Permit imprints (cash), (see 145).

.22 Nonidentical Weight Pieces

.221 Pound Rates

a. Permit Imprint. When all pieces in a non-identical mailing are subject to a pound rate, postage may be paid by permit imprint. Postage for permit imprint mailings of non-identical weight pieces subject to pound rates is computed on the entire bulk mailed at one time.

b. Meter Stamps. Postage may be paid by meter stamps on mailings subject to a pound rate. Each piece must have full metered postage affixed. Postage for each piece will be computed by multiplying the weight of the piece by the pound rate. The postage must be rounded up to the nearest tenth of a cent or whole cent depending upon what type of postage meter is used.

.222 Minimum Per Piece Rates. Postage may only be paid by meter stamps, precanceled stamps, or precanceled stamped envelopes for mailings of nonidentical weight pieces subject to the minimum per piece rate.

.223 Combination of Rates. Mailings may include pieces subject to pound rates and pieces subject to minimum per piece charges when postage is paid by meter stamp.

.23 Single Piece Weight. The weight of a single piece must be entered (on Form 3602, *Statement of Mailing With Permit Imprints,* or Form 3602–PC, *Statement of Mailing-Bulk Rates*) as *Nonidentical* whenever a mailing contains pieces having different weights. The total postage will be entered on the space on Form 3602 which reads "postage chargeable per piece."

682 Mailing Statement for Bulk Mailings

The mailer must complete and submit a mailing statement with each mailing as follows:

a. Form 3602, *Statement of Mailing Matter With Permit Imprints,* for mail with permit imprints (see 145); or

b. Form 3602–PC, *Statement of Mailing-Bulk Rates,* for mail bearing precanceled stamps or meter stamps.

Note: All mailing statements are subject to verification by the Postal Service.

690 Ancillary Services

691 Forwarding and Return

Undeliverable third-class mail bearing the words *Forwarding and Return Postage Guaranteed* will be forwarded when the new address is known. Postage at the appropriate single piece rate will be collected from the addressee. If the addressee refuses to pay the forwarding postage, the piece will be returned to the sender who must pay postage for its forwarding and its return. If the piece cannot be forwarded because the new address is not known, it will be given the *Return Postage Guaranteed* service (see 692).

692 Return

Third-class mail which is undeliverable-as-addressed and bears the words *Return Postage Guaranteed* will be returned to the sender postage due at the appropriate single piece rate. The piece will be marked *Undeliverable-As-Addressed.* The reason why the piece is undeliverable-as-addressed or the addressee's new address will not be endorsed on the piece. Mail which qualifies for a single piece fourth-class rate under the provisions of 611.12 will be returned at that rate if the mailer's address correction service endorsement includes the name of the fourth-class rate. For example, if a third-class piece qualifies for mailing at the special fourth-class rate for books, the endorsement would be: *Special Fourth-Class Book Rate: Return Postage Guaranteed.*

693 Address Correction

The addressee's new address, or the reason why a third-class mailing piece is undeliverable if the new address is not known, may be obtained by the sender either independently of, or in combination with the return and forwarding services provided by 691 and 692. To obtain these services, the mailing piece must bear the words: *Address Correction Requested, Address Correction Requested Return Postage Guaranteed,* or *Address Correction Requested Forwarding and Return Postage Guaranteed,* according to the service desired. The following conditions govern these services:

a. A piece weighing 2 ounces or less bearing the words *Address Correction Requested* will be returned to the sender for a fee with the new address or the reason for nondelivery endorsed on the piece (see 612.2).

b. If a piece weighs more than 2 ounces and bears the words *Address Correction Requested,* Form 3579, *Undeliverable 2d, 3d, 4th or Controlled Circulation Matter,* or a central-markup label will be used to notify the sender (see 612.2). *Exception:* When address labels are affixed to plastic wrappers, or a window address format is used on a mailing piece, Form 3547, *Notice to Mailer of Correction in Address,* may be used to provide the requested information.

c. If a piece that weighs more than 2 ounces and bears the words *Address Correction Requested, Return Postage Guaranteed,* or *Address Correction Requested Forwarding and Return Postage Guaranteed* must be returned to the sender by the post office of original address because the piece cannot be forwarded, Form 3579 or a central-markup label will be affixed to the piece, and the piece will be returned to the sender for a fee (see 612.2) plus postage at the appropriate single piece rate (see 611.1).

d. If a piece of any weight bearing the words *Address Correction Requested, Address Correction Requested Return Postage Guaranteed,* or *Address Correction Requested Forwarding and Return Postage Guaranteed* is forwarded to the addressee in

compliance with either the sender's or addressee's guarantee to pay forwarding postage (see 159.212), then Form 3547 will be used by the forwarding post office to furnish the sender with the new address for a fee (see 612.2).

e. Mail which qualifies for a single piece fourth-class rate under the provisions of 611.12 will be returned at that rate if the mailer's address correction service endorsement includes the name of the fourth-class rate. For example, if a third-class piece qualifies for mailing at the special fourth-class rate for books, the endorsement would be: *Special Fourth-Class Book Rate: Forwarding and Return Postage Guaranteed.*

694 No Service Requested

If the services described in 691, 692, or 693 are not requested by the mailer, and the piece is undeliverable as addressed, and the period for forwarding has expired (see 159.2), then the Postal Service will treat the piece as dead mail.

CHAPTER 7

Fourth-Class Mail

710 Rates and Fees

711 Rates

711.1 Parcel Post Rates (See Exhibit 711.1)

711.2 Bound Printed Matter Rates (See Exhibit 711.2)

711.3 Special Fourth-Class Rates (See Exhibit 711.3)

711.4 Library Rate (See Exhibit 711.4)

712 Fees

712.1 Annual Fourth-Class Presort Mailing Fee. The annual fourth-Class presort mailing fee is $30.00.

712.2 Address Correction Fee. The fee for address correction service is 25¢ per notice issued.

BILLING CODE 7710-12-M

A. Single Piece Zone Rates

Not Exceeding (pounds)	Local	Zones 1, 2	Zone 3	Zone 4	Zone 5	Zone 6	Zone 7	Zone 8
2	$1.15	$1.35	$1.39	$1.56	$1.72	$1.84	$1.98	$2.22
3	1.23	1.45	1.53	1.73	1.86	2.04	2.24	2.61
4	1.29	1.56	1.65	1.82	2.00	2.23	2.50	3.00
5	1.36	1.68	1.77	1.92	2.14	2.43	2.77	3.39
6	1.42	1.71	1.84	2.01	2.28	2.62	3.03	3.78
7	1.47	1.76	1.90	2.11	2.41	2.82	3.29	4.17
8	1.51	1.80	1.97	2.20	2.55	3.02	3.56	4.58
9	1.54	1.85	2.03	2.29	2.69	3.21	3.82	4.95
10	1.57	1.89	2.10	2.39	2.83	3.41	4.08	5.34
11	1.60	1.94	2.17	2.50	3.00	3.65	4.42	5.73
12	1.64	1.98	2.22	2.56	3.03	3.77	4.57	6.12
13	1.67	2.02	2.27	2.63	3.17	3.89	4.72	6.41
14	1.70	2.05	2.32	2.69	3.25	3.99	4.86	6.62
15	1.73	2.09	2.36	2.74	3.33	4.09	4.99	6.80
16	1.76	2.13	2.41	2.80	3.40	4.19	5.11	6.98
17	1.79	2.16	2.45	2.85	3.47	4.28	5.23	7.15
18	1.82	2.20	2.49	2.91	3.54	4.37	5.34	7.31
19	1.86	2.23	2.53	2.96	3.61	4.46	5.45	7.47
20	1.89	2.27	2.58	3.01	3.67	4.54	5.55	7.62
21	1.92	2.30	2.62	3.06	3.74	4.62	5.66	7.78
22	1.95	2.34	2.66	3.14	3.85	4.78	5.80	7.90
23	1.98	2.37	2.72	3.25	3.99	4.96	6.02	8.03
24	2.01	2.44	2.80	3.35	4.12	5.13	6.24	8.16
25	2.04	2.51	2.89	3.46	4.28	5.31	6.46	8.28
26	2.07	2.58	2.97	3.56	4.39	5.48	6.68	8.40
27	2.11	2.65	3.06	3.67	4.53	5.66	3.90	8.52
28	2.14	2.72	3.14	3.77	4.66	5.83	7.12	8.63
29	2.17	2.79	3.23	3.88	4.80	6.01	7.34	8.75
30	2.20	2.86	3.31	3.98	4.93	6.18	7.56	8.85
31	2.68	3.09	3.46	4.09	5.07	6.36	7.78	9.41
32	2.71	3.12	3.49	4.19	5.20	6.53	8.00	9.51
33	2.74	3.16	3.57	4.30	5.34	6.71	8.22	9.61
34	2.77	3.19	3.65	4.40	5.47	6.83	8.44	9.80
35	2.80	3.22	3.74	4.51	5.61	7.06	8.66	10.06
36	2.83	3.28	3.82	4.61	5.74	7.23	8.88	10.32
37	2.86	3.35	3.91	4.72	5.88	7.41	9.10	10.58
38	2.89	3.42	3.99	4.82	6.01	7.58	9.32	10.84
39	2.93	3.49	4.08	4.93	6.15	7.76	9.54	11.10
40	2.96	3.56	4.16	5.03	6.28	7.93	9.76	11.36
41	2.99	3.63	4.25	5.14	6.42	8.11	9.98	11.62
42	3.02	3.70	4.33	5.24	6.55	8.28	10.20	11.88
43	3.05	3.77	4.42	5.35	6.69	8.46	10.42	12.14
44	3.08	3.84	4.50	5.45	6.82	8.63	10.64	12.40
45	3.11	3.91	4.59	5.56	6.96	8.81	10.86	12.66
46	3.14	3.98	4.67	5.66	7.09	8.98	11.08	12.92
47	3.17	4.05	4.76	5.77	7.23	9.16	11.30	13.18
48	3.20	4.12	4.84	5.87	7.36	9.33	11.52	13.44
49	3.23	4.19	4.93	5.98	7.50	9.51	11.74	13.70
50	3.27	4.26	5.01	6.08	7.63	9.68	11.96	13.96
51	3.30	4.33	5.10	6.19	7.77	9.86	12.18	14.22
52	3.33	4.40	5.18	6.29	7.90	10.03	12.40	14.48
53	3.36	4.47	5.27	6.40	8.04	10.21	12.62	14.74
54	3.39	4.54	5.35	6.50	8.17	10.38	12.84	15.00
55	3.42	4.61	5.44	6.61	8.31	10.56	13.06	15.26
56	3.45	4.68	5.52	6.71	8.44	10.73	13.28	15.52
57	3.48	4.75	5.61	6.82	8.58	10.91	13.50	15.78
58	3.51	4.82	5.69	6.92	8.71	11.08	13.72	16.04
59	3.54	4.89	5.78	7.03	8.85	11.26	13.94	16.30
60	3.57	4.96	5.88	7.13	8.98	11.43	14.16	16.56
61	3.60	5.03	5.95	7.24	9.12	11.61	14.38	16.82
62	3.64	5.10	6.03	7.34	9.25	11.78	14.60	17.08
63	3.67	5.17	6.12	7.45	9.39	11.96	14.82	17.34
64	3.70	5.24	6.20	7.55	9.52	12.13	15.04	17.60
65	3.73	5.31	6.29	7.66	9.66	12.31	15.26	17.86
66	3.76	5.38	6.37	7.76	9.79	12.48	15.48	18.12
67	3.79	5.45	6.46	7.87	9.93	12.66	15.70	18.38
68	3.82	5.52	6.54	7.97	10.06	12.83	15.92	18.64
69	3.85	5.59	6.63	8.08	10.20	13.01	16.14	18.90
70	3.88	5.66	6.71	8.18	10.33	13.18	16.36	19.16

Exception: (Parcels weighing less than 15 lbs. and meas. 84 inches equals that for a 15—pound parcel for the zone to which addressed. See Exhibit 751.

B. Bulk Zone Rates

The rate for each piece of a bulk zone rate mailing is the single piece rate for that zone for an item equal to the average weight per piece for all parcels in a mailing going to that zone, rounded up to the next highest whole pound.

Exhibit 711.1—Parcel Post Rates

BILLING CODE 7710-12-C

Single Piece Zone Rate

Pieces weighing up to— (pounds)	Zones							
	Local	1 and 2	3	4	5	6	7	8
1.5	$0.69	$0.92	$0.94	$0.97	$1.02	$1.08	$1.16	$1.19
2	.69	.93	.95	.99	1.06	1.14	1.25	1.28
2.5	.69	.93	.96	1.01	1.10	1.20	1.33	1.38
3	.69	.94	.97	1.03	1.14	1.25	1.41	1.47
3.5	.69	.94	.98	1.05	1.17	1.31	1.50	1.56
4	.69	.95	.99	1.07	1.21	1.37	1.58	1.66
4.5	.69	.95	1.00	1.09	1.25	1.42	1.67	1.75
5	.70	.96	1.02	1.12	1.29	1.48	1.75	1.85
6	.70	.96	1.04	1.16	1.36	1.59	1.92	2.03
7	.70	.97	1.06	1.20	1.44	1.71	2.09	2.22
8	.70	.98	1.08	1.24	1.51	1.82	2.25	2.41
9	.70	.99	1.10	1.28	1.59	1.94	2.42	2.59
10	.70	1.00	1.12	1.32	1.66	2.05	2.59	2.78

Bulk Rate

Zone	Piece rate (cents)	Bulk pound rate (cents)
Local	35	0.1
1 and 2	46	0.9
3	46	2.1
4	46	4.1
5	46	7.5
6	46	11.4
7	46	15.8
8	46	18.7

Exhibit 711.2—Bound Printed Matter Rates

Kind of mail (Rate restricted to items specifically named)	Rate (without regard to zone)		
	First pound or fraction of a pound	Each additional pound or fraction through 7 pounds	Each additional pound or fraction over 7 pounds
Books; 16-millimeter or narrower width films and catalogs of such films (rate applies for films and catalogs except when mailed to or from commercial theaters); printed music, printed objective test materials, sound recordings, playscripts and manuscripts for books, periodicals and music; printed educational reference charts permanently processed for preservation; looseleaf pages, and binders therefor, consisting of medical information for distribution to doctors, hospitals, medical schools, and medical students. (See 724.1).			
Single piece rate	59¢	22¢	13¢
Presort rates:			
Level A	[1]52¢	22¢	13¢
Level B	[2]55¢	22¢	13¢

[1] Mailings of 500 or more pieces properly prepared and presorted to 5-digit destination ZIP Codes. (See 724.2)
[2] Mailings of 2,000 or more pieces properly prepared and presorted to 5-digit and 3-digit destination ZIP Codes. (See 724.2)

Exhibit 711.3—Special Fourth-Class Rates

Kind of mail	Rate (without regard to zone)		
	First pound or fraction of a pound	Each additional pound or fraction through 7 pounds	Each additional pound or fraction over 7 pounds
Books; printed music; bound volumes of academic theses; sound recordings; periodicals; other library materials; museum and herbarium materials; 16-millimeter or narrower width films, filmstrips, transparencies, slides, microfilms, scientific or mathematical kits, instruments, or other devices; also, catalogs, guides or scripts for some of these materials. See 725	17¢	6¢	5¢

Exhibit 711.4—Library Rates

720 Classification

721 General Provisions Applicable to All Fourth-Class Mail

721.1 Description. Fourth-class mail consists of mailable matter:

a. Not mailed or required to be mailed as First-Class Mail;

b. Weighing sixteen ounces or more (except special or library rate fourth-class); and

c. Not entered as second-class mail (except as specifically provided for transient rate matter).

721.2 Additions and Enclosures. Markings and enclosures having the character of personal correspondence require, with certain exceptions, that the additional postage be paid at the first class rates (see 310). Only the following written additions and enclosures do not require additional first-class postage when they are placed in or on a parcel mailed at fourth-class rates:

a. The sender's and the addressee's names, occupations, and addresses, preceded by the word "from" or "to" and directions for transmission, delivery, forwarding, or return.

b. Marks (other than by written or printed words) to call attention to words or passages in the text.

c. Corrections of typographical errors in the body of circulars or printed matter by handwritten or typewritten changes or additions.

d. Corrections of proof sheets including corrections of typographical and other errors, changes in the text, insertion of new text, marginal instructions to the printer, and rewrites of parts. Corrections should be on margins or attached to the manuscript.

e. A simple manuscript dedication or inscription, which does not have the nature of personal correspondence, on the blank leaves or cover of a book or other printed matter.

f. Matter mailable as third-class mail printed on the wrapper, envelope, tag, or label.

g. Marks, numbers, names, or letters for the purpose of description, printed or written on the wrapper or cover.

h. The words "Please Do Not Open Until Christmas", "Happy Birthday, Mother", "With Best Wishes, John Doe", and similar inscriptions on the package, wrapper, or envelope, or on a tag or label attached thereto.

i. Manuscript accompanying proof sheets.

j. An invoice, whether or not it also serves as a bill, if it relates solely to the matter with which it is mailed, may be enclosed or placed in an envelope

(marked *Invoice Enclosed)* attached to the outside showing any or all of the following:

(*1*) Names and addresses of sender and addressee.

(*2*) Names and quantities of articles enclosed.

(*3*) Description of articles enclosed, including price, tax, style, stock number, size, and quality; and if defective, nature of defect.

(*4*) Order of file number, date of order, date and manner of shipment, shipping weight, and postage paid.

(*5*) Initials or name of packer or checker.

k. Instructions and directions for the use of the item mailed, in writing or otherwise, as an enclosure, attachment, or endorsement.

722 What May Be Mailed at Parcel Post Rates

722.1 Description. Any fourth-class matter may be mailed at parcel post rates (see 711.1). The parcel post rates are based on zones as described in 122.7.

722.2 Bulk Parcel Post

.21 Requirements. The bulk fourth-class zone rates are applied to mailings of 300 or more pieces of fourth-class mail of identical weight. Parcels need not be of identical size or content. Parcels which weigh less than 15 pounds and measure over 84 inches in length and girth combined may not be mailed at these rates. Mailings of pieces of nonidentical weight may only be made at bulk zone rates when authorized by the Office of Mail Classification, Rates and Classification Department, USPS Headquarters in accordance with 145.8 or 145.9.

.22 Special Services. Insurance, special delivery, special handling, and COD services may be used on mailings sent at bulk fourth-class zone rates. However, special services may not be used selectively for individual parcels mailed at these rates. Special services may be used selectively in conjunction with postage payment verification systems approved under the conditions stated in 722.21.

.23 Enclosures. In addition to the enclosures and additions listed in 721.2, items mailed at the parcel post rates may contain any printed matter mailable as third-class.

723 What May Be Mailed at Bound Printed Matters Rates

723.1 Description. Bound printed matter is fourth-class matter that weighs at least one pound and not more than 10 pounds, and which:

a. Consists of advertising, promotional, directory, or editorial material, or any combination of these.

b. Is securely bound by permanent fastenings such as staples, spiral binding, glue, stitching, etc. Loose leaf binders and similar fastenings are not considered permanent.

c. Consists of sheets of which at least 90 percent are imprinted by any process other than handwriting or typewriting with letters, characters, figures, or images, or any combination of these.

d. Does not have the nature of personal correspondence.

e. Is not a book eligible for mailing as special fourth-class rate mail.

f. Is not a book which would be eligible for mailing as special fourth-class rate mail but for the inclusion of advertising matter other than incidental announcements of books, that either: (1) is not permanently bound in the book itself, or (2) does not form an integral part of the book itself.

g. Is not stationery, such as pads of blank printed forms.

723.2 Bulk Bound Printed Matter

.21 Requirements. The bulk fourth-class zone rates are applied to mailings of 300 or more pieces of fourth-class bound printed matter of identical weight and size. Parcels which weigh less than 15 pounds and measure over 84 inches in length and girth combined may not be mailed at these rates. Mailings of pieces of nonidentical weight may only be made at bulk zone rates when authorized by the Office of Mail Classification, Rates and Classification Department, USPS Headquarters in accordance with 145.8 or 145.9.

.22 Special Services. Insurance, special delivery, special handling, and COD services may be used on mailings sent at bulk fourth-class zone rates. However, special services may not be used selectively for individual parcels mailed at these rates. Special services may be used selectively in conjunction with postage payment verification systems approved under the conditions stated in 722.21.

.23 Enclosures. In addition to the enclosures and additions listed in 721.2, items mailed at the bound printed matter rates may contain order forms, reply envelopes and cards, circulars, and miscellaneous types of printed advertising sheets. Samples of merchandise may be attached to the bound pages and to the loose enclosures.

724 What May Be Mailed at Special Fourth-Class Rates

724.1 General Description. Only the following specifically described articles may be mailed at the special fourth-class rates (see 711.3):

a. Books, including books issued to supplement other books, of 24 pages or more (at least 22 of which are printed) consisting wholly of reading matter, scholarly bibliography, or reading matter with incidental blank spaces for notations and containing no advertising matter other than incidental announcements of books. Advertising includes paid advertising and the publishers' own advertising in display, classified, or editorial style. The identification statement *Special Fourth-Class Rate* must be placed conspicuously on the address side of each package.

b. 16-millimeter or narrower width films (which must be positive prints in final form for viewing) and catalogs of such films of 24 pages or more (at least 22 of which are printed). Films and film catalogs sent to or from commercial theaters do not qualify for the special fourth-class rate. The identification statement *Special Fourth-Class Rate* must be placed conspicuously on the address side of each package.

c. Printed music whether in bound form or in sheet form. The identification statement *Special Fourth-Class Rate* must be placed conspicuously on the address side of each package.

d. Printed objective test materials and their accessories used by or in behalf of educational institutions to test ability, aptitude, achievement, interests, and other mental and personal qualities with or without answers, test scores, or identifying information recorded thereon in writing or by mark. The identification statement *Special Fourth-Class Rate* must be placed conspicously on the address side of each package.

e. Sound recordings, including incidental announcements of recordings and guides or scripts prepared solely for use with such recordings. Player piano rolls are classified as sound recordings. Miscellaneous advertisements, including trademarks, of persons or concerns other than the record manufacturer, are not permissible on title labels, protective sleeves, jackets, cartons, and wrappers, and such advertisements may not be mailed as enclosures. The identification statement *Special Fourth-Class Rate* must be placed conspicuously on the address side of each package.

f. Playscripts and manuscripts for books, periodicals, and music. The identification statement *Special Fourth-*

Class Rate must be placed conspicuously on the address side of each package.

g. Printed educational reference charts, permanently processed for preservation. The identification statement *Special Fourth-Class Rate* must be placed conspicuously on the address side of each package.

h. Looseleaf pages, and binders thereof, consisting of medical information for distribution to doctors, hospitals, medical schools, and medical students. The identification statement *Special Fourth-Class Rate* must be placed conspicuously on the address side of each package.

724.2 Special Fourth-Class Presort Rates

.21 Applicability. The presort rates apply to special fourth-class rate matter presorted by ZIP Codes, and mailed in minimum quantities (see 724.22) at a place and time designated by the postmaster. Marking, sack labeling, and container labeling requirements are contained in 764.

.22 Qualification for Presort Rates

.221 General Requirements

a. A mailing will receive only one level of presort rate, under 724.222 or 724.223. A mailer may, however, divide a mailing into two or more mailings with separate mailing statements to use both levels of presort rates.

b. The size and content of each piece need not be identical.

c. For purposes of the bulk special fourth-class rate schedule the following definitions apply:

(*1*) A *full sack* means at least eight pieces, or pieces of at least 1,000 cubic inches volume or weighing at least 20 pounds. However, no more than 70 pounds may be placed in any sack.

(*2*) A *substantially full sack* means at least four pieces, or pieces of at least 1,000 cubic inches volume or weighing at least 20 pounds. However, no more than 70 pounds may be placed in any sack.

.222 Level A

a. To qualify as a presorted piece subject to the special fourth-class presort level A rate (see 711.3) a piece must be one of a mailing of at least 500 pieces of identical weight receiving identical service, properly prepared and presented in full sacks (see 724.221c(1)) destined for 5-digit ZIP Code locations.

b. Mailings of at least 500 identical weight, nonmachinable outsides as described in 128 may qualify for presort level A if they are made up to preserve the 5-digit ZIP Code presort as prescribed by the postmaster of the office of mailing. The postmaster may require notification up to 24 hours before the mailing is presented. The mailer must comply with the postmaster's instructions on how to separate and present mailings of outsides. The postmaster will coordinate such mailings and obtain procedures for separation of parcels through the regional logistics office.

.223 Level B

a. To qualify as a presorted piece subject to the special fourth-class presort level B rate, a piece must be one of a mailing of at least 2,000 identical weight sackable pieces receiving identical service, properly prepared and presented:

(*1*) In full sacks or substantially full sacks, (see 724.221c) destined to 5-digit ZIP Code locations. Mail must be separated and sacked to 5-digit destinations in this manner to the maximum extent possible (see 724.221).

(*2*) With the remainder in full sacks destined to 3-digit locations. All materials in such sacks must be addressed to the same 3-digit destinations.

b. Machinable pieces (as defined in 128.4) mailed under the level B rate which would otherwise be required to be made up in full 3-digit sacks according to 724.223a(2) may instead be made up to the destination bulk mail centers (BMC's) provided the following conditions are met:

(*1*) There must be as least eight pieces or 20 pounds of material or 1,000 cubic inches of material for 3-digit destinations in the mailing.

(*2*) Sortation and sacking to 5-digit destinations must be done according to 724.223a(1).

(*3*) The mailer must submit a complete ZIP Code listing of pieces with the mailing statement. The list must show the 5-digit ZIP Code destinations and the number of pieces sent to each destination for pieces sacked according to 724.223a(1), and the 3-digit ZIP Code destinations, and the number of pieces sent to each destination, for pieces sorted to BMC's.

(*4*) The mailer must note on the mailing statement how many pieces would be required to meet the lesser requirements of 20 pounds or 1,000 cubic inches.

Note: A list of BMC's and the areas they serve may be obtained from the postmaster at the office of mailing.

.23 Nonqualifying Pieces. Pieces which are not made up to 5- or 3-digit ZIP Codes, or to BMC destinations as set forth in 724.22 are not considered presorted. Pieces which are not presented in *full* or *substantially full* sacks (see 724.221c) do not qualify for the presort rate. They must be presented for mailing under a separate mailing statement if mailed under permit imprint.

.24 Nonidentical Pieces. Nonidentical pieces, including those of different postage values, may be merged, presorted together, and presented as a single mailing only when the mailer has demonstrated that adequate records are maintained to enable the Postal Service to accurately verify and audit such mailings, and the procedure has been specifically authorized by the Director, Office of Mail Classification, Rates and Classification Department, USPS Headquarters, in accordance with 145.8 or 145.9.

724.3 Enclosures

.31 General. In addition to the enclosures and additions listed in 721.2, books and sound recordings mailed at the special fourth-class rates may contain the enclosures listed below.

.32 Books. Books mailed at the special fourth-class rate may contain:

a. Either one envelope or one addressed post card. If also serving as an order form, the envelope or card may be in addition to the order form listed in 724.32b.

b. One order form. If also serving as an envelope or post card, the order form may be in addition to the envelope or card listed in 724.32a.

c. Announcements of books, appearing in book pages or as loose enclosures. These announcements of books must be incidental, and must be exclusively devoted to books. They may not contain extraneous advertising of book related materials or services. *Exception:* Announcements may fully describe the conditions and methods of ordering books (such as by membership in book clubs) and may contain ordering instructions for use for the single order form in 724.32b.

d. No more than three of the announcements permitted by 724.32c may contain as part of their format a single order form, which may also serve as a post card. The order forms permitted are in addition to, and not in lieu of order forms which may be enclosed by virtue of any other provisions. *Note:* This is applicable only to books mailed at the special fourth-class rate. It is not available for those mailed at the library rate.

.33 Sound Recordings. Sound recording mailed at the special fourth-class rate may contain:

a. Either one envelope or one addressed post card. If also serving as an order form, the envelope or card may

be in addition to the order form listed in 724.33b.

b. One order form. If also serving as an envelope or post card, the order form may be in addition to the envelope or card listed in 724.33a.

c. Guides or scripts prepared solely for use with such recordings.

d. Announcements of sound recordings appearing on title labels, on protective sleeves, on the carton or wrapper, or on loose enclosures. These announcements of sound recordings must be incidental, and must be exclusively devoted to sound recordings. They may not contain extraneous advertising of sound recording related materials or services. *Exception:* Announcements may fully describe the conditions and methods of ordering sound recordings (such as by membership in sound recording clubs) and may contain ordering instructions for use with the single order form permitted in 724.33b.

e. Not more than three of the announcements permitted by 724.33d may contain as part of their format a single order form, which may also serve as a post card. The order forms permitted here are in addition to, and not in lieu of order forms which may be enclosed by virtue of any other provisions. *Note:* This is applicable only to sound recordings mailed at the special fourth class rate. It is not available for those mailed at the library rate.

.34 Other Material. Material, other than books and sound recordings, mailed at special fourth-class rates may contain only those additions and enclosures listed in 721.2.

725 What May Be Mailed at the Library Rate

725.1 Description. Only the articles specifically described in this section may be mailed at the fourth-class library rate (see 711.4). The identification statement *Library Rate* must be placed conspicuously on the address side of each package. Each package must show in the address or return address the name of a school, college, university, public library, museum, herbarium, or the name of a nonprofit religious, educational, scientific, philanthropic (charitable), agricultural, labor, veterans', or fraternal organization. No permit is required.

725.2 Items on Loan or Exchange. The following specific items may be mailed at the library rate when loaned or exchanged between schools, colleges, universities, public libraries, museums and herbariums, and nonprofit religious, educational, scientific, philanthropic (charitable), agricultural, labor, veterans', and fraternal organizations (see 623.23 for definitions); or when cooperatively processed by public libraries; or when loaned or exchanged between the above libraries, organizations, or associations, and their members, readers, or borrowers:

a. Books, consisting wholly of reading matter, scholarly bibliography, or reading matter with incidental blank spaces for notations and containing no advertising other than incidental announcements of books.

b. Printed music, whether in bound form or in sheet form.

c. Bound volumes of academic theses in typewritten or duplicated form.

d. Periodicals, whether bound or unbound.

e. Sound recordings.

f. Other library materials in printed, duplicated, or photographic form or in the form of unpublished manuscripts.

g. Museum materials, specimens, collections, teaching aids, printed matter, and interpretative materials intended to inform and to further the educational work and interests of museums and herbariums.

725.3 Items Not Required To Be on Loan or Exchange. The following specific items may be mailed at the library rate when sent to or from schools, colleges, universities, public libraries, museums and herbariums, and to or from nonprofit religious, educational, scientific, philanthropic (charitable), agricultural, labor, veterans', or fraternal organizations:

a. 16-millimeter or narrower width films, filmstrips, transparencies, slides, and microfilms. All of these must be positive prints in final form for viewing.

b. Sound recordings.

c. Museum materials, specimens, collections, teaching aids, printed matter, and interpretative materials intended to inform and to further the educational work and interests of museums and herbariums.

d. Scientific or mathematical kits, instruments, or other devices.

e. Catalogs of the materials in 725.3a–d and guides or scripts prepared solely for use with such materials.

725.4 Books Mailed By a Publisher or Distributor. Books, including books supplementing other books, consisting wholly of reading matter, scholarly bibliography, or reading matter with incidental blank spaces for notations, and containing no advertising matter other than incidental announcements of books, may be mailed at the library rate if they are mailed from a publisher or a distributor to a school, college, university, or public library. For purposes of this subsection:

a. A distributor is an agent, business firm or similar organization whose business is the sale, resale, shipment, or reshipment of books.

b. Books must be addressed to the qualifying institution. An individual recipient may only be noted with an attention line.

c. Books may be mailed to bookstores which are owned, operated and controlled by schools, colleges, or universities, including separately incorporated, nonprofit bookstores owned by those institutions.

d. Books may not be returned to a publisher or distributor by a school, college, university or public library.

725.5 Enclosures

.51 General. In addition to the enclosures and additions listed in 721.2, books and sound recordings mailed at the library rate may contain the enclosures listed below.

.52 Books. Books mailed at the library rate may contain:

a. Either one envelope or one addressed post card. If also serving as an order form, the envelope or card may be in addition to the order form listed in 725.52b.

b. One order form. If also serving as an envelope or post card, the order form may be in addition to the envelope or card listed in 725.52a.

c. Announcements of books appearing in book pages or as loose enclosures. These announcements of books must be incidental, and must be exclusively devoted to books. They may not contain extraneous advertising of book related materials or services. *Exception:* Announcements may fully describe the conditions and methods of ordering books (such as by membership in book clubs) and may contain ordering instructions for use with the single order form permitted in 725.52b.

.53 Sound Recordings. Sound recordings mailed at the library rate may contain:

a. Either one envelope or one addressed post card. If also serving as an order form, the envelope or card may be in addition to the order form listed in 725.53b.

b. One order form. If also serving as an envelope or post card, the order form may be in addition to the envelope or card listed in 725.53a.

c. Guides or scripts prepared solely for use with such recordings.

d. Announcements of sound recordings appearing on title labels, on protective sleeves, on the carton or wrapper, or on loose enclosures. These announcements of sound recordings must be incidental, and must be exclusively devoted to sound recordings. They may not contain extraneous

advertising of sound recording related materials or services. *Exception:* Announcements may fully describe the conditions and methods of ordering sound recordings (such as by membership in sound recording clubs) and may contain ordering instructions for use with the single order form permitted in 725.53b.

.54 Other Material. Material other than books and sound recordings mailed at the library rate may contain only those additions and enclosures listed in 721.2.

730 Service Objectives

Fourth-class mail may receive deferred service. The Postal Service does not guarantee delivery of fourth-class mail within a specified time.

740 Authorizations and Permits

741 Nonidentical Pieces Mailed at the Bulk Parcel Post Zone Rate

Nonidentical pieces may be mailed at the parcel post bulk zone rate only when the mailer has demonstrated that adequate records are maintained to verify and audit such mailings, and the procedure has been specifically authorized by the Director, Office of Mail Classification, Rates and Classification Department, USPS Headquarters in accordance with 145.8 or 145.9.

742 Special Fourth-Class Presort Mailing Fee

A fourth-class presort mailing fee (see 712.1) must be paid once each calendar year at each office of mailing by or for any person who mails at the presorted special fourth-class rates.

750 Physical Limitations

751 Weight and Size Limits

The weight and size limits in Exhibit 751 apply to all fourth-class parcels. Additional limitations for bulk zone rate and bound printed matter are contained in 722.21 and 723.1.

752 How to Compute the Size of a Parcel

752.1 Measurement. Compute the size of a parcel as follows (see Exhibit 752):

a. Measure the longest side,

b. Measure distance around the parcel at its thickest part (girth).

c. Add both measurements.

752.2 Two or More Packages. Two or more packages may be mailed as a single parcel if they are about the same size or shape or if they are parts of one article. They must be securely wrapped or fastened together and must not, together, exceed the weight or size limits.

	16 ounces or more but not exceeding	Length and girth must not exceed
a. Parcels Mailed Between Post Offices With 950 or More Revenue Units		
Parcels mailed at these post offices in the 48 contiguous States of the United States addressed for delivery at the same office or to another such post office in the 48 contiguous States. (See exceptions in 135.31b.)	40 pounds	84 inches
b. All Other Parcels		
Parcels mailed at or to		
(1) Any post office with 949 or less revenue units	70 pounds	100 inches
(2) Any rural or star route at any post office	do.	do.
(3) Any Army, Air Force or Fleet post office (See 126 for certain exceptions.)	do.	do.
(4) Any post office in Alaska or Hawaii	do.	do.
(5) Any post office in the Commonwealth of Puerto Rico	do.	do.
(6) Any post office in a Territory or Possession of the United States, including the Canal Zone and Trust Territory of the Pacific Islands. (See 112.)	do.	do.
(7) Any post office when contents of parcel consists of baby poultry, nursery stock, agricultural commodities, books, Braille writers and other appliances for the blind, and other items listed in 135.13 and 135.14. (The term *agricultural commodities* includes any product grown or produced incident to an agricultural activity on a farm or in a garden, orchard, nursery, or forest, but does not include articles manufactured or processed from these commodities.)	do.	do.
(8) Any post office, for official mail of Federal agencies mailed under the Postage and Fees Paid indicia or as prepaid Government mail (see 137.1 for franked mail).	do.	do.

Exhibit 751—Weight and Size Limits

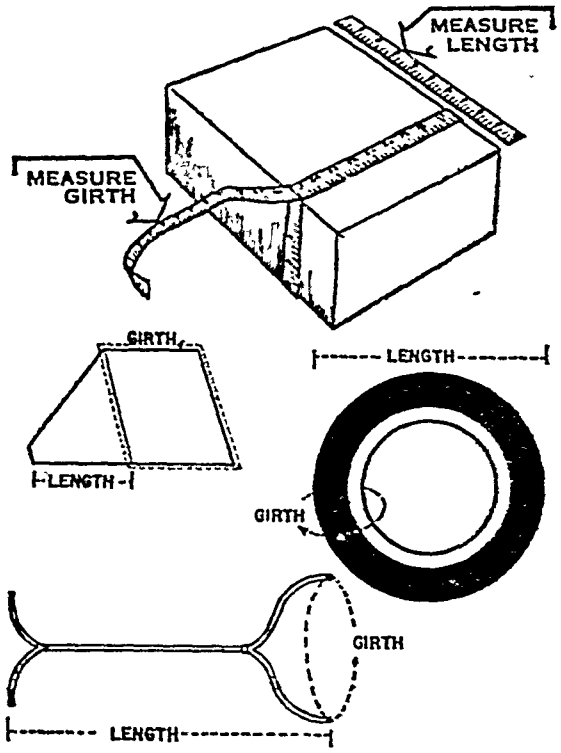

Exhibit 752—How to Measure a Parcel

760 Preparation Requirements

761 General Requirements

761.1 Addressing

.11 The address on all fourth-class matter mailed at bulk parcel post, bound printed matter, library, and special fourth-class rates must contain a complete ZIP Code.

.12 The return address of the sender must be shown on all fourth-class mail.

761.2 Sealing. Fourth-class mail must be wrapped or packaged so that it can be easily examined. Fourth-class mail is not *sealed against inspection.* Mailing at the fourth-class rates of postage is consent by the sender to postal inspection of the contents whether or not the mail piece is secured. To assure that their parcels will not be opened for postal inspection, customers should, in addition to paying the first-class rate of postage, plainly mark their parcels *First-Class* or use a similar endorsement.

762 Preparation of Bulk Parcel Post

762.1 Marking. The words *Fourth-Class Bulk Rates* or *Fourth-Class Blk. Rt.* must be incorporated as part of the permit indicia or be printed or rubber stamped above the address and to the left or below the permit imprint.

762.2 Separation. The mailer must separate mailing pieces by parcel post zones so that postage may be verified. This requirement may be waived if the mailer can demonstrate that records are maintained to enable the Postal Service to accurately verify and audit mailings of fourth-class bulk rate parcels. The Director, Office of Mail Classification, Rates and Classification Department, USPS Headquarters, must specifically approve systems for the acceptance of such mailings.

763 Preparation of Bound Printed Matter

763.1 Markings Required. The words *Bound Printed Matter* must be incorporated as part of the permit indicia or be printed or rubber stamped above the address and to the left or below the permit indicia. Mailings under the bulk rates in 711.2 must also be marked *Bulk Rate* or *Blk. Rt.*

763.2 Recommended Separations. In addition to the separations required in 762.2 it is recommended that mailers separate the pieces to the finest extent possible, in the manner prescribed by 663 for third-class bulk rate mailings.

763.3 Required Separation for Bulk Mailings. Mailers must separate mailing pieces by parcel post zones so that postage may be verified. Mail for each parcel post zone must be further separated and placed in sacks by cities or States of destination in each instance where there are 10 or more pieces for the same post office or State, or where 5 or more catalogs have a combined weight of 10 or more pounds. No. 3 sacks must be used except when greater volume requires the use of No. 2 sacks. When there is insufficient volume for a direct sack or a State sack, combine the pieces in sacks for mixed States by parcel post zones. Label each sack to include parcel post zone separation and destination. The total weight of pieces placed in one sack must not exceed 70 pounds.

763.4 Optional Handling of Bulk Mailings. At the option of the mailer, address labels and unaddressed pieces weighing in excess of 2 pounds, which are addressed for delivery only in the mailer's local parcel post zones, may be mailed separately for local delivery at the office of mailing, subject to all of the following conditions:

a. The address labels, which may not measure less than 3½ by 5 inches, must show the full name, address, and ZIP Code of the sender and addressee and must be sorted by the mailer to the fourth and fifth digit of the ZIP Code.

b. Postage must be paid by permit imprints for each label, including labels returned as undeliverable. The imprint may be placed on the pieces or on the label (see 145).

c. The mailer must submit a completed Form 3605, *Statement of Mailing-Bulk Zone Rates,* with each mailing.

d. The total weight of pieces placed in a sack, carton, crate, or any other type of container must not exceed 70 pounds.

e. The mailer must send the address labels to the postmaster at the delivery office.

f. Address labels bearing incorrect, nonexistent, or otherwise undeliverable addresses are corrected or endorsed to show why they are undeliverable and returned to the mailer. Each envelope is rated with postage due at the address correction fee (see 712.2) for each address label contained in the envelope. At the request of the mailer, the postmaster will notify the mailer (at the mailer's expense and by any reasonable means specified by the mailer and approved by the postmaster) of the number of address labels being returned. The request for notification must accompany the labels. Correctly addressed labels will be held awaiting arrival of the pieces.

g. The mail pieces must be deposited at the acceptance point designated by the postmaster. If the number of pieces deposited is less than the number of address labels provided, the postmaster must immediately notify the sender, or a designated representative or agent, of the number of pieces required to complete the delivery. If the additional pieces are not delivered to the post office within 15 days, the excess address labels will be returned to the mailer at the third-class single piece rate (see 611.1). If the number of pieces deposited exceeds the number of address labels provided, the postmaster must notify the sender of the number of excess pieces. However, delivery will not be delayed. As soon as deliveries are completed, the postmaster will notify the sender of the number of any excess pieces remaining. The mailer may call for the excess pieces without charge. Any excess pieces not called for within 15 days will be returned to sender with postage due at the single piece bound printed matter rate.

763.5 Bundling Instead of Sacking

.51 Regional Authorization

.511 The Regional Postmaster General for the post office of mailing may authorize the preparation of bound printed matter in bundles outside of mail sacks if such preparation is beneficial to the Postal Service. The mailer must submit an application to prepare mail in bundles instead of sacks to the postmaster where the mail is to be deposited. The following information must be furnished with the application:

a. Name and frequency of mailing;

b. Identity of post offices to which shipments will be made; and

c. Approximate quantity of pieces and number of bundles to each office.

.512 The postmaster will forward the application to the Regional Postmaster General with a detailed explanation of the transportation and processing arrangements. The application will be reviewed by the General Manager, Logistics Division and by others concerned, in his region and in any other region which will process the mail in order to determine whether intermediate or destination offices are capable of receiving and processing the bundles without increasing overall processing costs. The Regional Postmaster General will notify the postmaster whether the application has been approved or, if not, the reason for denial. The postmaster will send notice of the decision to the mailer.

.52 Bundling Requirements. Mailers bundling instead of sacking pieces must observe the following procedures:

a. Presorted by ZIP Code. Bound printed matter must be presorted in 5-digit ZIP-Coded bundles. When there

are insufficient pieces for a direct 5-digit bundle, the pieces must be presorted in 3-digit ZIP Coded bundles. All pieces which are not made up into 5-digit and 3-digit ZIP Coded bundles must be sacked and appropriately labeled.

b. Securing and Labeling. All bundles must be secured with a two-way tie (plastic straps or other strong tying material). The bundles must have red label D, yellow label C, or green label 3 affixed to appropriately identify them as either 5-digit ZIP Code delivery unit, mixed city, or SCF bundles.

c. Loaded Sequentially. Trailers of 5-dig and 3-digit ZIP Coded bundles must be sequentially loaded with dividers (plastic or paper) placed between each different 3-digit ZIP Coded destination.

d. Loading Diagram. Each trailer must carry a loading diagram detailing the ZIP Codes and destinations aboard and the sequence in which they are to be unloaded.

763.6 Palletizing Instead of Sacking

.61 Regional Authorization. The Regional Postmaster General for the post office of mailing may authorize the dispatch of bound printed matter on pallets without mail sacks, if such preparation is beneficial to the Postal Service. Applications for palletizing instead of sacking will be made and processed as prescribed in 763.51.

.62 Palletizing Requirements. Mailers palletizing instead of sacking bound printed matter must observe the following procedures:

a. Mailers must presort bound printed matter and prepare 5-digit, 3-digit, and State packages according to the minimum sack requirements of 763.3. The Regional Postmaster General may waive packaging requirements for 5-digit pallets when mailers effectively demonstrate that they will prepare pallets to remain intact to the destination.

b. Pallets must be made up as 5-digit, 3-digit ZIP Code pallets, and State pallets when the mail load to a destination is either 650 pounds or three feet high. Pallets must not contain more than 2,000 pounds of mail or mail addressed to more than one zone.

c. Labels must be at least five inches by nine inches in size with characters at least one inch high.

764 Preparation of Special Fourth-Class Presort Rate Mail

764.1 Markings Required. The appropriate identification statement prescribed by 724.1 must appear on the address side of each piece, preceded by the word PRESORTED.

764.2 Sack Labeling Requirements

.21 General. Sacks must be labeled in accordance with the criteria in 724.22 as illustrated in the samples shown in 764.22 through 764.24.

.22 Level A Presort Rate Mailings

a. Regular parcels, 5-digit destination
Line 1: City, State, 5-Digit ZIP Code
Line 2: Class, Contents
Line 3: Mailer, Mailer Location
Sample:

CLEVELAND OH 44101
4C MACH
FR J COMPANY BOSTON MA

b. Irregular parcels, 5-digit destination
Line 1: City, State, 5-Digit ZIP Code
Line 2: Class, Contents
Line 3: Mailer, Mailer Location
Sample:

CLEVELAND OH 44101
4C IRREG
FR J COMPANY BOSTON MA

.23 Level B Presort Rate Mailings Mailed Under 724.223b

a. Machinable parcels, 5-digit destination
Line 1: City, State, 5-Digit ZIP Code
Line 2: Class, Contents
Line 3: Mailer, Mailer Location
Sample:

CLEVELAND OH 44101
4C MACH
FR J COMPANY BOSTON MA

b. Machinable parcels, 3-digit destination
Line 1: BMC, State, BMC Code
Line 2: Class, Contents
Line 3: Mailer, Mailer Location
Sample:

BMC PITTSBURGH PA 152
4C MACH
FR J COMPANY BOSTON MA

c. Irregular parcels—not applicable

.24 All Other Level B Presort Rate Mailings

a. Machinable parcels, 5-digit destination
Line 1: City, State, 5-Digit ZIP Code
Line 2: Class, Contents
Line 3: Mailer, Mailer Location
Sample:

CLEVELAND OH 44101
4C MACH
FR J COMPANY BOSTON MA

b. Machinable parcels, 3-digit destination
Line 1: BMC, State, BMC Code
Line 2: Class, Contents, 3-Digit ZIP Code Prefix of Contents
Line 3: Mailer, Mailer Location
Sample:

BMC PITTSBURGH PA 152
4C MACH ALL 441
FR J COMPANY BOSTON MA

Or

BMC PITTSBURGH PA 152
4C MACH ALL 440
FR J COMPANY BOSTON MA

c. Irregular parcels, 5-digit destination
Line 1: City, State, 5-Digit ZIP Code
Line 2: Class, Contents
Line 3: Mailer, Mailer Location
Sample:

CLEVELAND OH 44101
4C IRREG
FR J COMPANY BOSTON MA

d. Irregular parcels, 3-digit destination
Line 1: City, State, 3-Digit ZIP Code Prefix
Line 2: Class, Contents
Line 3: Mailer, Mailer Location
Sample:

CLEVELAND OH 441
4C IRREG
FR J COMPANY BOSTON MA

Or

SCF CLEVELAND OH 440
4C IRREG
FR J COMPANY BOSTON MA

764.3 Container or Pallet Labeling

.31 General. Containers and pallets must be labeled by mailers in accordance with the criteria in 128 as illustrated in the samples shown in 764.32 through 764.34.

.32 Level A Presort Rate Mailings

a. Machinable parcels, 5-digit destination
Line 1: City, State, 5-Digit ZIP Code
Line 2: Class, Contents
Line 3: Mailer, Mailer Location
Sample:

CLEVELAND OH 44101
4C MACH
FR J COMPANY BOSTON MA

b. Irregular parcels, 5-digit destination
Line 1: City, State, 5-Digit ZIP Code
Line 2: Class, Contents
Line 3: Mailer, Mailer Location
Sample:

CLEVELAND OH 44101
4C IRREG
FR J COMPANY BOSTON MA

c. Outside parcels, 5-digit destination
Line 1: City, State, 5-Digit ZIP Code
Line 2: Class, Contents
Line 3: Mailer, Mailer Location
Sample:

CLEVELAND OH 44101
4C OUTS
FR J COMPANY BOSTON MA

.33 Level B Presort Rate Mailings Mailed Under 724.223b

a. Machinable parcels, 5-digit destination

Line 1: City, State, 5-Digit ZIP Code
Line 2: Class, Contents
Line 3: Mailer, Mailer Location
Sample:

CLEVELAND OH 44101
4C MACH
FR J COMPANY BOSTON MA

b. Machinable parcels, BMC destination

Line 1: BMC, State, BMC Code
Line 2: Class, Contents
Line 3: Mailer, Mailer Location
Sample:

BMC PITTSBURGH PA 152
4C MACH
FR J COMPANY BOSTON MA

c. Irregular parcels—not applicable

d. Outside parcels—not applicable

.34 All Other Level B Presort Rate Mailings

a. Machinable parcels, 5-digit destination

Line 1: City, State, 5-Digit ZIP Code
Line 2: Class, Contents
Line 3: Mailer, Mailer Location
Sample:

CLEVELAND OH 44101
4C MACH
FR J COMPANY BOSTON MA

b. Machinable parcels, 3-digit destination

Line 1: BMC, State, BMC Code
Line 2: Class, Contents, 3-Digit ZIP Code Prefix of Contents
Line 3: Mailer, Mailer Location
Sample:

BMC PITTSBURGH PA 152
4C MACH ALL 441
FR J COMPANY BOSTON MA

Or

BMC PITTSBURGH PA 152
4C MACH ALL 440
FR J COMPANY BOSTON MA

c. Irregular parcels, 5-digit destination

Line 1: City, State, 5-Digit ZIP Code Prefix
Line 2: Class, Contents
Line 3: Mailer, Mailer Location
Sample:

CLEVELAND OH 44101
4C IRREG
FR J COMPANY BOSTON MA

d. Irregular parcels, 3-digit destination

Line 1: City, State, 3-Digit ZIP Code Prefix
Line 2: Class, Contents
Line 3: Mailer, Mailer Location
Sample:

CLEVELAND OH 441
4C IRREG
FR J COMPANY BOSTON MA

Or

SCF CLEVELAND OH 440
4C IRREG
FR J COMPANY BOSTON MA

e. Outside parcels, 5-digit destination

Line 1: City, State, 5-Digit ZIP Code
Line 2: Class, Contents
Line 3: Mailer, Mailer Location
Sample:

CLEVELAND OH 44101
4C OUTS
FR J COMPANY BOSTON MA

f. Outside parcels, 3-digit destination

Line 1: City, State, 3-Digit ZIP Code Prefix
Line 2: Class, Contents
Line 3: Mailer, Mailer Location
Sample:

CLEVELAND OH 441
4C OUTS
FR J COMPANY BOSTON MA

Or

SCF CLEVELAND OH 440
4C OUTS
FR J COMPANY BOSTON MA

765 Preparation of Library Rate Materials

When 5,000 or more pieces of identical weight are mailed at the library rates (see 711.4) during a single day, and there are enough pieces for the same destination to be approximately 1,000 cubic inches in volume, they must be presorted and placed in sacks under the instructions contained in 663. When 1,000 or more but less than 5,000 identical pieces are mailed at these rates during a single day, and there are enough pieces for the same destination to be approximately 1,000 cubic inches in volume, they must be presorted and placed in sacks under the instructions contained in 663.

770 Mailing

771 Single Piece Rates

Articles mailed at single piece fourth-class rates must be mailed at a time and place specified by the postmaster at the post office of mailing.

772 Bulk or Presort Rates

Mailings at bulk or special fourth-class presort rates must be made at a time and facility specified by the postmaster of the office of mailing. Mailings will be verified at the post office of acceptance to establish that they are properly prepared and presorted and qualify for the bulk or presort rate.

773 Parcels Exceeding Size or Weight Limits

Parcels exceeding the limits of size or weight for articles mailed at post offices with 950 or more revenue units (see Exhibit 751) that originate and are prepared in cities or towns served by such post offices may not be diverted to other post offices or to a rural or highway contract carrier for mailing.

780 Payment of Postage

781 Single Piece Mailings

Mailers of articles at single piece rates may use any method of paying postage.

782 Bulk Rate Mailings

Mailers of fourth-class matter at bulk rates must pay postage by permit imprint or meter stamps and shall complete and submit a Form 3602, *Statement of Mailing with Permit Imprints*, or Form 3602-PC, *Statement of Mailing-Bulk Rates* or Form 3605, *Statement of Mailing-Bulk Zone Rates*, as appropriate, with each mailing.

790 Ancillary Services

791 Forwarding and Return

Undeliverable fourth-class mail bearing the words *Forwarding and Return Postage Guaranteed* is forwarded when the new address is known. Forwarding postage will be collected from the addressee. If the addressee refuses to pay the forwarding postage, the piece will be returned to the sender who must pay both forwarding and return postage. The single piece rates and conditions are applicable to forwarding and returning of parcels mailed at single piece, presort, and bulk rates. If the piece cannot be forwarded because the new address is not known, it will be given the *Return Postage Guaranteed* service (see 792).

792 Return

792.1 Pieces Bearing Return Instructions. Undeliverable fourth-class mail having obvious value or bearing the words *Return Postage Guaranteed If Undeliverable* will be returned to the sender, or to the person designated by the sender. The piece is not endorsed with the addressee's new address or the reason why the piece is undeliverable as addressed.

792.2 Pieces Bearing a Meter Stamp. When fourth-class mail of obvious value bearing a postage meter stamp of a private meter user is received unaddressed and without return address, and delivery cannot be made,

the piece must be returned to the post office of mailing. The office of mailing will deliver the piece to the meter licensee on payment of the return postage.

792.3 Rates and Conditions. The following rates and conditions apply to the transmission of fourth-class mail between the returning office and the office to which the piece is returned:

a. When articles prepaid at the single piece bound printed matter, special fourth-class, or library rates are returned, the return charge will be computed at the same rate.

b. When articles prepaid at the special fourth-class presort rates are returned, postage is computed at single piece rates.

793 Address Correction

The addressee's new address, or the reason why a fourth-class mailing piece is undeliverable if the new address is not known, may be obtained by the sender either independently of, or in combination with the return and forwarding services provided by 791 and 792. To obtain these services, the mailing piece must bear the words: *Address Correction Requested,* or *Address Correction Requested Return Postage Guaranteed,* or *Address Correction Requested Forwarding and Return Postage Guaranteed,* according to the service desired. The following conditions govern these services:

a. When a piece bears the words: *Address Correction Requested,* Form 3579, *undeliverable 2d, 3d, 4th* or *Controlled Circulation Matter,* or a central-markup label is used to notify the sender for a fee (see 712.2). Form 3579 or central-markup label and the old address portion of the mailing piece will be prepared for mailing to the sender in an envelope, in the same manner that address correction notices are prepared for mailing to second-class and controlled circulation publications. *Exception:* When address labels are affixed to plastic wrappers, or a window address format is used on a mailing piece, making compliance with the foregoing instruction difficult, Form 3547, *Notice to Mailer of Correction in Address,* will be substituted to provide the requested information.

b. If a piece bearing the words *Address Correction Requested Return Postage Guaranteed* or *Address Correction Requested Forwarding and Return Postage Guaranteed* must be returned to the sender by the post office of original address because the piece cannot be forwarded, then Form 3579 or central-markup label is affixed to the piece, and it is returned to the sender for a fee (see 712.2) plus the applicable single piece fourth-class postage for the piece.

c. If a piece bearing the words *Address Correction Requested, Address Correction Requested Return Postage Guaranteed,* or *Address Correction Requested Forwarding* and *Return Postage Guaranteed,* is forwarded to the addressee in compliance with either the sender's or addressee's guarantee to pay forwarding postage (159.212, .231), then Form 3547 is used by the forwarding post office to furnish the sender with the new address for a fee (see 712.2).

794 No Service Requested

If the services described in 791, 792, or 793 are not requested by the mailer, and the piece is undeliverable as addressed, and the period for forwarding has expired (159.2), then the Postal Service will treat the piece as dead mail.

CHAPTER 8 [RESERVED]

CHAPTER 9—SPECIAL SERVICES

910 Special Mail Services.

911 Registered Mail

911.1 Description

.11 Purpose. The registered mail system is designed to provide added protection for valuable and important mail. Indemnity is provided for mail that is registered in case of loss or damage. Registered mail is the most secure service the Postal Service offers. It incorporates a system of receipts to monitor the mail's movement from the point of acceptance to delivery.

911.2 Fees and Liability

* * * * *

.22 Payment of Fees and Postage. The fee and postage may be paid by ordinary postage stamps, meter stamps, or by permit imprints. The fee and postage on official mail of Federal Government agencies and departments are collected under the reimbursement procedures in 137.21.

* * * * *

.251 Value. The sender must tell the postal clerk (or enter on the firm mailing bill if a firm mailer) the FULL value of mail matter presented for registration. The fact that private insurance may be carried on registered mail does not modify the requirements for declaring the full value. No indemnity will be paid for any matter on which the full value is not declared.

911.3 Preparation for Mailing

* * * * *

.39 Withdrawal or Recall

.391 Conditions. The sender may withdraw or recall registered mail without charge before its delivery, under the following conditions:

a. By writing on the receipt *Withdrawn before dispatch* and signing and surrendering the receipt.

b. By filing a written rquest for its return after dispatch at the post office where the article was mailed, giving names and addresses of sender and addressee, the registry number, and date of mailing. The sender must pay for any telegrams or telephone calls.

.392 Remailing. If remailed, the article must be under a new cover, and bear new postage and fees.

912 Certified Mail

913 Insured Mail

913.1 Description

.11 Purpose. Insured mail provides indemnity coverage for an article which is lost, rifled, or damaged. No record of insured mail is kept at the office of mailing. Return receipt and restricted delivery services are available upon payment of the prescribed fees (see 932 and 933). Insured mail is dispatched and handled in transit as ordinary mail.

914 Collect on Delivery Mail

914.1 Description

* * * * *

.172 Alteration of COD Charges or Designation of New Addressee. The sender of a COD package may alter the COD charges or direct delivery to a new addressee by filing a request with the postmaster at the office of mailing on Form 3818. *Authorization to Change COD Charges or Addressee* and paying the fee listed for the service in 914.21. The postmaster will send the directions to the office of delivery by telegram or telephone *if the sender pays the costs.*

915 Special Delivery

915.1 Description. Mail that has special delivery service will be given expedited delivery when it is received at the office of address if it falls into any of the delivery situations listed in 915.2.

915.2 Points of Delivery. Special delivery mail is given immediate delivery at the office of address during prescribed hours to:

a. Points within a radius of 1 mile of any post office, station, or branch (except contract and rural stations and branches).

b. Points within the city delivery limits of any post office having this service. These conditions apply to customers of rural routes residing within the 1-mile limitation.

c. Residences on rural routes if the road is passable and is located within one-half mile of rural route; otherwise, mail is left in the box. *Delivery will be made by carrier on his regular trip.*

d. Customers of nonpersonnel rural units if their residence is within one-half mile of the unit and if the road leading to it is passable. Otherwise, mail is left in customer's box at the unit.

e. Points within one-half mile of a highway contract route by the route carrier who may make such delivery on his regular trip if the deviation from his regular route will not delay him in meeting schedule requirements.

f. Boxes erected on the city delivery boundary line and if customer lives no more than 3 blocks beyond and there is a passable walk or street to the residence. If there is no passable walk or street, the article will be left in the box if the box can accommodate it. Otherwise, a notice will be left in the box.

g. If delivery cannot be made under any of the provisions of *a* through *f*, the article will be delivered as ordinary mail.

916 Special Handling

917 Business Reply

917.1 Description. Business reply service enables mailers to receive mail back from individuals by paying postage and fees on only the mail that is returned to them from their original mailings. Postage and fees for such mail are collected at the post office to which the business reply mail is addressed before it is delivered to the original distributor. Specially printed business reply cards, envelopes, cartons, and labels are distributed by mailers for use in sending mail to the distributor without prepayment of postage.

918 Parcel Airlift

918.1 Definition. Parcel airlift service (PAL) provides for air transportation of parcels on a space available basis to or from military post offices outside the contiguous 48 states.

918.2 Description of Service. PAL is available for mail sent either third- or fourth-class which is mailed at or addressed to any overseas military post office outside the 48 contiguous states. PAL parcels are entitled to space available air transportation, from the post office of origin to the appropriate port of embarkation for onward dispatch to the overseas military post office or from the port of embarkation for onward dispatch to a post office within the 48 contiguous states.

918.3 Physical Limitations. Any parcel not exceeding 30 pounds in weight or 60 inches in length and girth combined.

918.4 Fees. The PAL fee is 25¢ for parcels weighing 2 pounds or less; 50¢ for parcels weighing over 2 pounds and not exceeding 3 pounds; 75¢ for parcels weighing over 3 pounds and not exceeding 4 pounds; and $1.00 for parcels weighing over 4 pounds.

918.5 Marking. PAL parcels must be marked with the large letters *PAL* on the address side, preferably below the postage and above the name of the addressee. Postal employees will place these letters on all such parcels at the time of acceptance.

920 [Reserved]

930 Supplemental Mail Services

931 Certificates of Mailing

932 Return Receipts

932.1 Purpose. Return receipts furnish the mailer with evidence of delivery. The fee paid for a return receipt does not insure the article against loss or damage. Return receipts may be obtained for mail which is sent COD, is insured for more than $15.00, or which is registered or certified. The return receipt is returned by mail by the Postal Service to the mailer after the article is delivered to the addressee. For international return receipts, see 450 of Publication 42, *International Mail.*

933 Restricted Delivery

940 Nonmail Services

941 Money Orders

941.1 Issuance

* * * * *

.12 Amounts, Fees, and Payments

.121 Amounts. The maximum amount for a single money order is $400. There is no limitation on the number of orders that may be purchased at one time. *Exception:* The Postal Service may impose *temporary* restrictions.

.122 Fees

a. The fee for a postal military money order is 20¢. They are issued by military facilities authorized by the Department of Defense.

b. Fees for domestic money orders issued at other post offices including those with branches or stations on military installations are as follows:

Amount of money order	Amount of fee, domestic
$0.01 to $10	$0.55
$10.01 to $50	0.80
$50.01 to $400	1.10

.123 Payment. Money orders must be paid for in U.S. currency, coins (in any amount), or, established traveller's checks payable in U.S. dollars.

* * * * *

.34 Payment to Other Than Payee

.341 Transfer of Money Order

a. By Payee. Only the payee of a money order may endorse it to any other person or firm.

b. On Power of Attorney. A person with power of attorney may cash money orders in behalf of the payee who gave him that authority. A copy of the power of attorney must be filed at the office of payment.

c. On Separate Written Order. A payee may file a separate written order with the post office authorizing payment to another person. The person must be designated by name as the one to receive payment.

.342 Upon Assignment. When a payee, such as an individual or firm, makes an assignment, and intends that money orders be paid to the assigned person, he must file a copy of a power of attorney or a written order with the post office. The person designated to receive payment must sign the money order and indicate below his signature the capacity in which he acts.

.343 On Death of Payee. A money order belonging to a deceased owner may be paid to the executor or administrator of the estate appointed by the court. A certified copy of the appointment as executor or administrator must be filed with the local postmaster. Payments will be made in accordance with the laws of the State of which the deceased was a resident.

.344 To a Concern No Longer in Business. Money orders will be paid to the legal representative of a firm, association, or company that has ceased to exist. Appropriate documents proving legal representation must be provided to the post office.

.345 To a Committee or a Guardian. Money orders will not be issued or paid to a ward when declared incompetent by a court. They will be paid only to the committee, guardian, or other duly authorized person responsible for the ward. Appropriate proof of authority must be provided to the post office.

.346 To Minors. A money order payable to a minor may be paid to the father or mother as natural guardian unless prohibited by court order. Proof of parenthood may be required.

* * * * *

.36 Identification of Payee. When presenting a money order for payment, the payee must sign in the presence of a postal employee. *If the payee is not personally known to the postal*

employee, the payee will be required to provide identification. Normally acceptable forms of identification are drivers permits, military identification cards, or other credentials showing signature of bearer and having serial numbers or other indicia which can be traced to the holder. *Social security cards are not acceptable.* The Postal Service may refuse payment on any money order when the identity of the payee is not proven to the satisfaction of the postal employee.

942 Nonpostal Stamps

942.1 Migratory-Bird Hunting and Conservation Stamps

.11 Purpose. Migratory-bird hunting and conservation stamps are required by federal law to hunt migratory birds, such as ducks, geese, etc. Post offices act as agents of the federal government in selling these stamps to provide a convenient location for purchasing them.

.12 Where Sold. Migratory-bird hunting and conservation stamps are sold at all post offices in CAG's A–G, and at certain designated offices in CAG's K and L where there is a demand for them. A current migratory-bird poster will be displayed in the lobby.

.13 Price. Migratory-bird hunting and conservation stamps cost $7.50 each.

.14 Instructions on Administration of Hunting Laws. *Postal employees will not instruct purchasers of migratory-bird hunting and conservation stamps on matters relating to administration of hunting laws. Inquiries should be directed to the: Fish and Wildlife Service, Washington, DC 20240, or local game wardens.*

.15 Redemption from Public. Blocks composed of two or more attached unused stamps, sold on consignment to any person but not resold, may be redeemed at any time on or before the last day of the stamp year. Stamps validated by signature or stamps that appear to have been removed from a hunting license or identification card will not be accepted.

943 United States Savings Bonds

944 Postal Savings

945 Mailing List Service

945.1 Correction of Mailing Lists

.11 Purpose. Mailing lists are the lists of individual occupant addresses and post offices serving each address where the various organizations listed in 945.12 frequently send mail. The Postal Service, for the specified charges, will correct mailing lists, arrange properly submitted addresses in sequence of carrier delivery, and sort mailing lists for multi-ZIP Coded cities to the proper 5-digit ZIP Code. Residential change of address information is available to election boards and registration commissions for a fee. Also, post offices may provide large volume mailers with city and state schemes.

950 Alternate Delivery Services

951 Post Office Lockbox Service

951.1 Purpose and Definition

.11 Purpose. All postal customers are provided with basic mail delivery at no charge. This free service is provided by means of general delivery (see 953) or through carrier delivery. Post office lockboxes are a premium service offered for a fee to those customers who require more than the basic free delivery service but who neither desire nor are required to use the caller service described in 952. Lockbox service is provided for the convenience of the public and in addition to available carrier delivery, general delivery, or caller service. It affords privacy and permits customers to obtain mail at their convenience during the hours the box lobby is open.

.12 Definition

.121 Lockbox service is provided only through the use of post office lockboxes. The term *drawer* should not be used and all boxes previously referred to by that term are to be considered the same as lockboxes for all purposes, including rental fees. The terms *lockbox* and *box* are the same for purposes of these regulations and the term *boxholder* is applied to those who use lockboxes.

.122 Lockboxes are located only in postal facilities. Customers receive their mail in these boxes and may open the boxes by means of a key or combination. Numbers are assigned to the boxes and customers must use their assigned post office box number in their addresses immediately above the city, state and ZIP Code.

.123 There are five sizes of boxes. However, all sizes may not be available at every facility. Customers are assigned a lockbox of a certain size in accordance with their needs as determined by the postmaster and the availability of boxes at the facility. The postmaster may require a customer to rent a larger size box if the volume of mail increases beyond the capacity of the present box.

.124 Boxes without doors for customer access, formerly identified as Call Boxes, will be used only in conjunction with general delivery service, and no rent will be charged for their use.

.125 Lockbox service does not include *alternate means of delivery* established to replace, simplify, or extend carrier delivery service. Examples are Vertical Improved Mail (VIM) units, neighborhood cluster box units, apartment house units, rural nonpersonnel units, etc. *Section 951 does not apply to these alternate means of delivery.*

952 Caller Service

952.1 Purpose and Definition

.11 Purpose. Caller service is a premium service offered for a fee to those customers who require more than the general or carrier delivery available to all postal customers, and who either desire or required by this part, to use caller service. Customers who use caller service must pickup their mail at the post office during the hours the caller service windows are open. This service makes use of the traditional post office box number as the address. The terms *box number* and *caller number* are to be considered the same when used in this section.

953 General Delivery

954 Firm Holdouts

[FR Doc. 79-20403 Filed 6-28-79; 10:06 am]
BILLING CODE 7710-12-M

---

39 CFR Part 111

Replacement of Chapter I of the Postal Service Manual With the Domestic Mail Manual

AGENCY: Postal Service.

ACTION: Final rule.

SUMMARY: By virtue of a document published elsewhere in this issue the Postal Service is replacing chapter I of the Postal Service Manual with a completely revised, renumbered and renamed Domestic Mail Manual. Chapter I of the Postal Service Manual is presently incorporated in the Federal Register. See 39 CFR 111.1. Since the Domestic Mail Manual takes the place of chapter I of the Postal Service Manual, the Code of Federal Regulations must be revised to reflect the changed name, numbering, subscription price, and table of contents.

EFFECTIVE DATE: July 30, 1979.

FOR FURTHER INFORMATION CONTACT: Paul J. Kemp, (202) 245–4638.
Fred Eggleston,
Acting Assistant General Counsel.

In consideration of the foregoing, Subchapter C, Part 111 of Title 39, Code of Federal Regulations, is revised to read as follows:

SUBCHAPTER C—DOMESTIC MAIL SERVICES

PART 111—GENERAL INFORMATION ON POSTAL SERVICE

Sec.
111.1 Domestic Mail Manual; incorporation by reference of regulations governing domestic mail services.
111.2 Availability of the Domestic Mail Manual.
111.3 Amendments to the Domestic Mail Manual.
111.4 Approval of the Director of the Federal Register.
111.5 Contents of the Domestic Mail Manual.

Authority: 5 U.S.C. 552(a), (39 U.S.C. 401, 404, 407, 408, 3001–3011, 3201–18, 3403–3405, 3601, 3621; 50 U.S.C. 1463, 1464.)

§ 111.1 Domestic Mail Manual; incorporation by reference of regulations governing domestic mail services.

Section 552(a) of title 5, United States Code, relating to the public information requirements of the Administrative Procedure Act, provides in pertinent part that "* * * matter reasonably available to the class of persons affected thereby is deemed published in the Federal Register when incorporated by reference therein with the approval of the Director of the Federal Register." In conformity with that provision, and with 39 U.S.C. section 410(b)(1), and as provided in this part, the United States Postal Service hereby incorporates by reference in this part, the Domestic Mail Manual, a looseleaf publication published and maintained by the U.S. Postal Service, Washington, D.C. 20260.

§ 111.2 Availability of the Domestic Mail Manual.

(a) Copies of the Domestic Mail Manual are available for reference and inspection upon request at the National Headquarters and regional offices of the U.S. Postal Service and at all United States Post Offices and classified stations and branches during normal business hours. Regional offices are located in New York, Philadelphia, Memphis, Chicago, and San Bruno.

(b) A copy of the Domestic Mail Manual, together with each amendment of it, is on file with the Director, Office of the Federal Register, National Archives and Records Service, General Services Administration, at 1100 "L" Street, NW., Room 8401, Washington, D.C. 20408.

(c) The Domestic Mail Manual may be purchased from the Superintendent of Documents, Washington, D.C. 20402 for $17.00. This price includes entitlement to receive, for an indefinite period, changes in the Domestic Mail Manual which may be published from time to time.

§ 111.3 Amendments to the Domestic Mail Manual.

Changes in the Domestic Mail Manual will periodically be published in the Federal Register. Subscribers to the Domestic Mail Manual will automatically receive the amendments from the Government Printing Office.

§ 111.4 Approval of the Director of the Federal Register.

(a) Incorporation by reference of the publication now titled the Domesic Mail Manual was approved by the Director of the Federal Register under 5 U.S.C. 552(a) and 1 CFR Part 51.

(b) This approval was granted on March 29, 1979 for the period of one year at the conclusion of which it will expire without further action unless renewed and extended by the Director upon application by the U.S. Postal Service.

§ 111.5 Contents of the Domestic Mail Manual.

The Domestic Mail Manual contains the following parts:

(a) Chapter 1—Domestic Mail Services
(1) Subchapter 110—General Information
(i) Part 111—Scope
(ii) Part 112—Who May Carry Letters
(iii) Part 113—Service in Post Offices
(iv) Part 114—Complaints
(v) Part 115—Mail Security
(vi) Part 116—118—[Reserved]
(vii) Part 119—Trademarks, Service Marks, and Copyrights
(2) Subchapter 120—Preparation for Mailing
(i) Part 121—Packaging
(ii) Part 122—Addresses
(iii) Part 123—Nonmailable Matter—Written, Printed, and Graphic
(iv) Part 124—Nonmailable Matter—Articles and Substances; Special Mailing Rules
(v) Part 125—Mail Addressed From, To, or Between Military Post Offices Overseas
(vi) Part 126—Mail Sent Via Department of State to U.S.
(vii) Part 127—Minimum Sizes
(viii) Part 128—Processing Categories
(ix) Part 129—Envelopes and Cards
(3) Subchapter 130—Mail Classification
(i) Part 131—Classes of Mail
(ii) Part 132—Mail Classification Centers
(iii) Part 133—Appeal of a Contested Classification
(iv) Part 134—Mail Sent by Members of the U.S. Armed Forces
(v) Part 135—For the Blind and Other Handicapped Persons
(vi) Part 136—Mixed Classes
(vii) Part 137—Official Mail
(4) Subchapter 140—Postage
(i) Part 141—Stamped Envelopes, Postal Cards, Aerogrammes
(ii) Part 142—Adhesive Stamps
(iii) Part 143—Precanceled Stamps
(iv) Part 144—Postage Meters and Meter Stamps
(v) Part 145—Permit Imprints (Mail Without Affixed Postage)
(vi) Part 146—Prepayment and Postage Due
(vii) Part 147—Exchanges and Refunds
(viii) Part 148—Revenue Deficiency
(ix) Part 149—Indemnity Claims
(5) Subchapter 150—Collection and Delivery
(i) Part 151—Private Mail Receptacles
(ii) Part 152—Mail Deposit and Collection
(iii) Part 153—Conditions of Delivery
(iv) Part 154—General Delivery
(v) Part 155—City Delivery
(vi) Part 156—Rural Service
(vii) Part 157—Highway Contract Service
(viii) Part 158—[Reserved]
(ix) Part 159—Undeliverable Mail
(6) Subchapter 160—Philately
(i) Part 161—Policy
(ii) Part 162—Purpose and Selection of Commemorative Stamps and Postal Stationery and Philatelic Products
(iii) Part 163—Distribution and Sale of Stamps, Postal Stationery, and Philatelic Products
(iv) Part 164—Cancellations for Philatelic Purposes
(v) Part 165—Special Philatelic Services, Products, and Progams
(vi) Part 166—Copyright of Philatelic Designs
(7) Subchapter 170—Special Cancellations
(i) Part 171—Authorization
(ii) Part 172—Revocation
(iii) Part 173—Requirements for Obtaining Special Stamp Cancellation Die Hubs
(iv) Part 174—Disposition
(v) Part 175—Mail Submitted for Special Cancellations
(b) Chapter 2—Express Mail
(1) Subchapter 210—Rates and Fees
(i) Part 211—General Information
(ii) Part 212—Express Mail Same Day Airport Service Rates
(iii) Part 213—Express Mail Custom Designed Service Rates
(iv) Part 214—Express Mail Next Day Service Rates
(2) Subchapter 220—Classification
(i) Part 221—Description

(ii) Part 222—Express Mail Same Day Airport Service
(iii) Part 223—Express Mail Custom Designed Service
(iv) Part 224—Express Mail Next Day Service
(3) Subchapter 230—Service Guarantee
(4) Subchapter 240—Authorizations and Permits
(i) Part 241—Service Agreements
(ii) Part 242—Special Permit and Postage Trust Accounts
(5) Subchapter 250—Physical Limitations
(i) Part 251—Weight
(ii) Part 252—Size
(6) Subchapter 260—Preparation Requirements
(i) Part 261—Express Mail Same Day Airport Service
(ii) Part 262—Express Mail Custom Designed Service
(iii) Part 263—Express Mail Next Day Service
(7) Subchapter 270—Mailing
(8) Subchapter 280—Payment of Postage
(9) Subchapter 290—Ancillary Services
(i) Part 291—Forwarding
(ii) Part 292—Return
(iii) Part 293—Evidence of Mailing
(iv) Part 294—Insurance and Indemnity
(v) Part 295—Claims Procedures
(c) Chapter 3—First-Class Mail
(1) Subchapter 310—Rates and Fees
(2) Subchapter 320—Classification
(i) Part 321—General Description
(ii) Part 322—Postal and Post Cards
(iii) Part 323—Presorted First-Class Mail
(iv) Part 324—First-Class Zone Rated (Priority) Mail
(3) Subchapter 330—Service Objectives
(i) Part 331—General
(ii) Part 332—Specific
(4) Subchapter 340—Authorizations and Permits
(i) Part 341—Annual Presort Fee
(ii) Part 342—Other Permits Required
(5) Subchapter 350—Physical Limitations
(i) Part 351—Weight Limits
(ii) Part 352—Size Limits
(iii) Part 353—Nonstandard First-Class Mail
(6) Subchapter 360—Preparation Requirements
(i) Part 361—General Requirements
(ii) Part 362—Preparation of Presort Rate Mail
(iii) Part 363—First-Class Zone Rated (Priority) Mail; Marking and Sealing
(7) Subchapter 370—Mailing
(i) Part 371—Regular Single Piece and Card Rates
(ii) Part 372—Presort Rates
(iii) Part 373—First-Class Zone Rates (Priority) Mail
(8) Subchapter 380—Payment of Postage
(i) Part 381—Single Piece Rates
(ii) Part 382—Presort Rates
(iii) Part 383—First-Class Zone Rated (Priority) Rates
(9) Subchapter 390—Ancillary Services
(i) Part 391—Forwarding
(ii) Part 392—Return and Address Correction
(d) Chapter 4—Second-Class Mail
(1) Subchapter 410—Rates and Fees
(i) Part 411—Rates
(ii) Part 412—Fees
(2) Subchapter 420—Classification
(i) Part 421—Requirements for all Second-Class Publications
(ii) Part 422—Types of Authorizations
(iii) Part 423—Special Second-Class Privileges
(iv) Part 424—Second-Class Mailing Privileges for News Agents
(v) Part 425—What May Be Mailed at the Second-Class Rates
(vi) Part 426—Copies Not Paid For By the Addressee
(3) Subchapter 430—Service Objectives
(i) Part 431—General
(ii) Part 432—Newspaper Treatment
(4) Subchapter 440—Authorizations and Permits
(i) Part 441—Original Entry for Publishers and News Agents
(ii) Part 442—Additional Entry Applications
(iii) Part 443—Applications to Mail at Special Second-Class Rates
(iv) Part 444—Application for Reentry
(v) Part 445—Application for Exceptional Dispatch
(vi) Part 446—Revocation of Additional Entry, Special Second-Class Privileges, Reentry, and Exceptional Dispatch
(vii) Part 447—Maintenance and Verification of Publisher Records
(viii) Part 448—Statement of Ownership, Management and Circulation
(ix) Part 449—Fees
(5) Subchapter 450—Physical Limitations
(6) Subchapter 460—Preparation Requirements
(i) Part 461—Identification Statements in Copies
(ii) Part 462—Preparation
(iii) Part 463—Marking
(iv) Part 464—Presort Requirements
(7) Subchapter 470—Mailing
(i) Part 471—Who May Mail
(ii) Part 472—Place of Mailing
(8) Subchapter 480—Payment of Postage
(i) Part 481—Payments in Advance of Dispatch
(ii) Part 482—Mailing Statement
(iii) Part 483—Marked Copy
(9) Subchapter 490—Ancillary Services
(i) Part 491—Forwarding
(ii) Part 492—Address Correction Service
(iii) Part 493—Return
(e) Chapter 5—Controlled Circulation Mail
(1) Subchapter 510—Rates and Fees
(i) Part 511—Rates
(ii) Part 512—Fees
(2) Subchapter 520—Classification
(i) Part 521—Description and Qualifications
(ii) Part 522—Definition of Advertising
(iii) Part 523—What May Be Mailed
(3) Subchapter 530—Service Objectives
(4) Subchapter 540—Authorizations and Permits
(i) Part 541—Controlled Circulation Applications
(ii) Part 542—Change in Title or Frequency
(iii) Part 543—Revocation of Controlled Circulation Privileges
(5) Subchapter 550—Physical Limitations
(6) Subchapter 560—Preparation Requirements
(i) Part 561—Identification Statements in Copies
(ii) Part 562—Preparation
(iii) Part 563—Marking
(iv) Part 564—Presort Requirement
(7) Subchapter 570—Mailing
(8) Subchapter 580—Payment of Postage
(i) Part 581—Payment in Advance of Dispatch
(ii) Part 582—Mailing Statement
(iii) Part 583—Marked Copy
(iv) Part 584—Statistical Statement
(v) Part 585—Mailer's Records
(9) Subchapter 590—Ancillary Services
(i) Part 591—Forwarding
(ii) Part 592—Address Correction Service
(iii) Part 593—Return
(f) Chapter 6—Third-Class Mail
(1) Subchapter 610—Rates and Fees
(i) Part 611—Rates
(ii) Part 612—Fees
(2) Subchapter 620—Classification
(i) Part 621—Description
(ii) Part 622—Third-Class Bulk Mail
(iii) Part 623—Special Bulk Rates
(iv) Part 624—Keys and Identification Items
(v) Part 625—Additions

(vi) Part 626—Enclosures
(vii) Part 627—Attachments
(viii) Part 628—Other Additions, Enclosures, and Attachments
(3) Subchapter 630—Service Objectives
(4) Subchapter 640—Authorizations and Permits
(i) Part 641—Annual Fee—Bulk Rates
(ii) Part 642—Application to Mail at the Special Bulk Rates
(iii) Part 643—Revocation
(5) Subchapter 650—Physical Limitations
(i) Part 651—Weight and Size Limits
(ii) Part 652—Nonstandard Third-Class Mail
(6) Subchapter 660—Preparation Requirements
(i) Part 661—Addressing
(ii) Part 662—Marking
(iii) Part 663—Preparation of Bulk Rate Mailings
(iv) Part 664—Merchandise Samples
(v) Part 665—Catalogs and Books
(7) Subchapter 670—Mailing
(i) Part 671—Single Piece Rates
(ii) Part 672—Bulk Rates
(8) Subchapter 680—Payment of Postage
(i) Part 681—Method of Payment
(ii) Part 682—Mailing Statement for Bulk Mailing
(9) Subchapter 690—Ancillary Services
(i) Part 691—Forwarding and Return
(ii) Part 692—Return
(iii) Part 693—Address Correction
(iv) Part 694—No Service Requested
(g) Chapter 7—Fourth-Class Mail
(1) Subchapter 710—Rates and Fees
(i) Part 711—Rates
(ii) Part 712—Fees
(2) Subchapter 720—Classification
(i) Part 721—General Provisions Applicable to All Fourth-Class Mail
(ii) Part 722—What May Be Mailed at Parcel Post Rates
(iii) Part 723—What May Be Mailed at Bound Printed Matter Rates
(iv) Part 724—What May Be Mailed at Special Fourth-Class Rates
(v) Part 725—What May Be Mailed at the Library Rate
(3) Subchapter 730—Service Objectives
(4) Subchapter 740—Authorizations and Permits
(i) Part 741—Nonidentical Pieces Mailed at the Bulk Parcel Post Zone Rate
(ii) Part 742—Special Fourth-Class Presort Mailing Fee
(5) Subchapter 750—Physical Limitations
(i) Part 751—Weight and Size Limits
(ii) Part 752—How to Compute the Size of a Parcel
(6) Subchapter 760—Preparation Requirements
(i) Part 761—General Requirements
(ii) Part 762—Preparation of Bulk Parcel Post
(iii) Part 763—Preparation of Bound Printed Matter
(iv) Part 764—Preparation of Special Fourth-Class Presort Rate Mail
(v) Part 765—Preparation of Library Rate Materials
(7) Subchapter 770—Mailing
(i) Part 771—Single Piece Rates
(ii) Part 772—Bulk or Presort Rates
(iii) Part 773—Parcels Exceeding Size or Weight Limits
(8) Subchapter 780—Payment of Postage
(i) Part 781—Single Piece Mailings
(ii) Part 782—Bulk Rate Mailings
(9) Subchapter 790—Ancillary Services
(i) Part 791—Forwarding and Return
(ii) Part 792—Return
(iii) Part 793—Address Correction
(iv) Part 794—No Service Requested
(h) Chapter 8—[Reserved]
(i) Chapter 9—Special Services
(1) Subchapter 910—Special Mail Services
(i) Part 911—Registered Mail
(ii) Part 912—Certified Mail
(iii) Part 913—Insured Mail
(iv) Part 914—Collect on Delivery Mail
(v) Part 915—Special Delivery
(vi) Part 916—Special Handling
(vii) Part 917—Business Reply
(viii) Part 918—Parcel Airlift
(2) Subchapter 920—[Reserved]
(3) Subchapter 930—Supplemental Mail Services
(i) Part 931—Certificates of Mailing
(ii) Part 932—Return Receipts
(iii) Part 933—Restricted Delivery
(4) Subchapter 940—Nonmail Services
(i) Part 941—Money Orders
(ii) Part 942—Nonpostal Stamps
(iii) Part 943—United States Savings Bonds
(iv) Part 944—Postal Savings
(v) Part 945—Mailing List Service
(5) Subchapter 950—Alternate Delivery Services
(i) Part 951—Post Office Lockbox Service
(ii) Part 952—Caller Service
(iii) Part 953—General Delivery
(iv) Part 954—Firm Holdouts

[FR Doc. 79-20406 Filed 6-28-79; 10:06 am]
BILLING CODE 7710-12-M

39 CFR Parts 242, 243, 247, 248, 257, 258

Miscellaneous Changes and Deletions to 39 CFR Resulting From Establishment of the Domestic Mail Manual

AGENCY: Postal Service.

ACTION: Final Rule.

SUMMARY: By virtue of a document published elsewhere in this issue, the Postal Service is replacing Chapter I of the Postal Service Manual with a completely revised, renumbered and renamed Domestic Mail Manual. As a part of that revision effort, a small number of regulations and parts of regulations that are presently published in the Code of Federal Regulations, but not in Chapter I of the Postal Service Manual, have been placed in the Domestic Mail Manual. Since the renamed Domestic Mail Manual is incorporated by reference in the Federal Register, it would be duplicative and perhaps confusing for these regulations to continue to be published separately under different numbers in the Code of Federal Regulations. Accordingly, the Code of Federal Regulations is being revised to make needed changes and deletions.

EFFECTIVE DATE: July 30, 1979; except that § 257.3(e)(3)(v) as added at 44 FR 33880 and any changes to §§ 242.1 and 243.2(a) and to Parts 247, 248, 257 and 258 of Title 39, Code of Federal Regulations, that may be published in the future to take effect before July 30, 1979, shall remain in effect as written until incorporated in the Domestic Mail Manual through subsequent amendment.

FOR FURTHER INFORMATION CONTACT: Paul J. Kemp, 245-4638. Accordingly, 39 CFR is amended as follows:

PART 242—CHANGE IN NAME OR SITE

§ 242.1 [Reserved]

1. Delete and reserve § 242.1 and revise the heading of Part 242 to read as follows:

PART 242—CHANGE OF SITE

PART 243—CONDUCT OF OFFICES

§ 243.1 [Reserved]

2. Delete and reserve § 243.1; strike out the words "Section 262.8" in paragraph (g) of § 243.2 and insert in lieu thereof "Section 265.10"; revise paragraph (a) of § 243.2 to read as follows:

§ 243.2 Quarters

(a) *Employee bulletin boards.* Bulletin boards may be placed in workrooms and employees' lunchrooms for displaying notices as prescribed in this manual and Management Labor Organization Agreements.

* * * * *

PART 247—DISCONTINUANCE OF POST OFFICE. [RESERVED]

PART 248—SUSPENSION OF POST OFFICE OPERATIONS. [RESERVED]

PART 257—PHILATELY. [RESERVED]

PART 258—SPECIAL CANCELLATIONS. [RESERVED]

3. Delete and reserve Parts 247, 248, 257 and 258.

Fred Eggleston,

Acting Assistant General Counsel.

(39 U.S.C. 401(2))

[FR Doc. 79-20407 Filed 6-28-79; 10:06 am]

BILLING CODE 7710-12-M

federal register

Friday
July 6, 1979

Part III

Consumer Product Safety Commission

Environmental Protection Agency

Department of Health, Education, and Welfare

Food and Drug Administration

Department of Agriculture

Food Safety and Quality Service

Scientific Bases for Identification of Potential Carcinogens and Estimation of Risks

Requests for Comments on Reports

CONSUMER PRODUCT SAFETY COMMISSION

ENVIRONMENTAL PROTECTION AGENCY

DEPARTMENT OF HEALTH, EDUCATION, AND WELFARE

Food and Drug Administration

DEPARTMENT OF AGRICULTURE
Food Safety and Quality Service

Scientific Bases for Identification of Potential Carcinogens and Estimation of Risks; Request for Comments on Report

AGENCIES: Consumer Product Safety Commission (CPSC); Environmental Protection Agency (EPA); Food and Drug Administration, Department of Health, Education and Welfare (FDA); Food Safety and Quality Service, Department of Agriculture (FSQS)

ACTION: Request for public comment on scientific report.

SUMMARY: This notice publishes and requests comment on a scientific report entitled: "Scientific Bases for Identification of Potential Carcinogens and Estimation of Risks." The report was written by the Work Group on Risk Assessment of the Interagency Regulatory Liaison Group (IRLG) with the assistance of senior scientists at the National Cancer Institute (NCI) and the National Institute of Environmental Health Sciences (NIEHS). The report represents the best judgments of these scientists and those of the four agencies (CPSC, EPA, FDA, and the Occupational Safety and Health Administration (OSHA)) comprising the IRLG at the time the report was written on the scientific concepts and methods currently in use to identify and evaluate substances that may pose a risk of cancer to humans. The FSQS has since joined IRLG. Scientists at FSQS have reviewed the report and concur. The report is being published by CPSC, EPA, FDA, and FSQS for comment in order to give interested persons an opportunity to express their views on the validity and appropriateness of the concepts and methods described for identifying and evaluating carcinogens. After reviewing the comments received, the four agencies anticipate publishing a statement giving notice of whatever revisions to the document are appropriate, if any.

DATE: Written comments on the report should be submitted by September 30, 1979.

ADDRESS: Comments should be sent to IRLG, Room 500, 1111 18th Street, N.W., Washington, D.C. 20207.

FOR FURTHER INFORMATION CONTACT: Susan Guenette at (202-634-4350).

SUPPLEMENTARY INFORMATION:

Background

In August, 1977, The Consumer Product Safety Commission, the Environmental Protection Agency, the Food and Drug Administration of the Department of Health, Education, and Welfare, and the Occupational Safety and Health Administration of the Department of Labor agreed to work together as the Interagency Regulatory Liaison Group (IRLG) to improve protection of the public health and the environment through sharing of information, avoiding duplication of effort, and developing consistent regulatory policy.

On October 11, 1977, the IRLG published in the Federal Register an Interagency Agreement relating to the Regulation of Toxic and Hazardous Substances (42 FR 54856). To implement this agreement, the IRLG established work groups to develop common, consistent, or compatible practices in areas of activities common to the four activities, including risk assessments. Provisional work plans were published for the work groups in the Federal Register on February 17, 1979 (43 FR 7174).

The work plan for the Work Group on Risk Assessment, appearing at 43 FR 7195, provides that the general goal of the work group is to characterize the types of health hazards that may result from human exposure to chemicals, devices, consumer goods, and other articles and substances. The initial task established by the work group was to address the problems associated with health risks due to exposure to chemicals, specifically the risk of cancer. The work group set out to examine the available scientific methods used in the assessment of carcinogenic risk and select for use by the four agencies those currently having the strongest experimental and theoretical support. The work group explicitly restricted its task to the development of concepts and methods for assessing risk, without making any attempt to make statements regarding the appropriate regulatory response for particular types and levels of risk. Recently, the Food Safety and Quality Service of the Department of Agriculture joined the other agencies as a participant in the IRLG.

The Report

The full text of the report, entitled "Scientific Bases for Identification of Potential Carcinogens and Estimation of Risks," is set forth in the Appendix to this notice. The report describes (1) the basis for making a qualitative evaluation of whether a particular substance presents a carcinogenic hazard and how the results of epidemiological studies and animal bioassays, along with other types of information, are used in making that evaluation; and (2) the methods that are used in making quantitative estimates of the carcinogenic risk posed by the substance, if such risk estimates are appropriate or required. It represents the best judgment of scientists at CPSC, EPA, FDA, and OSHA and of the participating senior scientists at NCI and NIEHS on the scientific principles applicable to identifying and evaluating substances that may pose a risk of cancer to humans. Scientists at FSQS have reviewed the report and concur. The report is intended to serve as a valuable scientific reference which may be considered by the agencies, consistent with their statutes and in association with other relevant information, in the evaluation of risk and as a means of ascertaining the adequacy of experimental and epidemiological methods used in that evaluation.

The identification and evaluation of carcinogens is a fundamental step in any regulatory program. However, each of the agencies publishing this document for comment administers different laws requiring a variety of findings precedent to regulatory action. It is not the purpose of this notice and comment procedure to give the principles in this document the force of law in making any of those required findings. In the event any of the agencies wishes to utilize this document to develop a substantive rule of law, it will initiate appropriate proceedings under its own applicable statutes. The report does not have any regulatory status at this time other than as a valuable scientific appraisal of scientific principles applicable to identifying and evaluating potential human carcinogens. Accordingly, this notice does not request comments related to the regulatory status of the report.

Scientific and Public Review of the Report

As stated above, the report represents the best judgments of scientists in the IRLG agencies and of the participating senior scientists at NCI and NIEHS. In order better to enable the scientific community at large to review and comment on the report, the agencies are subjecting the documents not only to review through this Federal Register publication, but also to scientific peer review through publication in the *Journal of the National Cancer Institute*. The report has been accepted for publication in the *Journal* and is expected to be published in the near future. The process of scientific peer review will proceed concurrently with this notice and comment proceeding.

As previously stated, the report was prepared by personnel in three of the agencies publishing this notice—CPSC,

EPA, and FDA—and by personnel in OSHA, NCI, and NIEHS. The participation of FSQS in the IRLG began after the report was prepared. Because OSHA already has conducted an extensive public proceeding, including a lengthy public hearing, on its proposed rule for the Identification, Classification, and Regulation of Toxic Substances Posing a Potential Occupational Carcinogenic Risk [42 FR 54148, October 4, 1977] and will soon issue a final rule, only CPSC, EPA, FDA, and FSQS are participating in this notice and comment procedure.

Interested persons are invited to submit, on or before September 30, 1979, written comments regarding the report. The comments will be reviewed by the four agencies with the assistance of members of the Work Group on Risk Assessment of the IRLG and scientists at NCI and NIEHS. Comments and any accompanying material should be addressed to IRLG, Room 500, 1111 18th Street, N.W., Washington, D.C. 20207. Comments received after the close of the comment period will be considered to the extent practicable.

Dated: June 26, 1979.

For the Consumer Product Safety Commission:

Susan B. King, Chairman.

For the Environmental Protection Agency:

Douglas M. Costle,

Administrator.

For the Food and Drug Administration:

Donald Kennedy,

Commissioner.

For the Food Safety and Quality Service:

Carol Tucker Foreman,

Assistant Secretary of Agriculture.

Scientific Bases for Identification of Potential Carcinogens and Estimation of Risks

Report of the Interagency Regulatory Liaison Group, Work Group on Risk Assessment

During the preparation of this document, the Interagency Regulatory Liaison Group consisted of four agencies: the United States Consumer Product Safety Commission (CPSC); the United States Environmental Protection Agency (EPA); the Food and Drug Administration (FDA) of the United States Department of Health, Education, and Welfare; and the Occupational Safety and Health Administration (OSHA) of the United States Department of Labor.

Work Group Members [1]

Eula Bingham, *IRLG Principal* (Assistant Secretary of Labor for Occupational Safety and Health)

Joseph V. Rodricks, *Chairman* (Food and Drug Administration)

Elizabeth L. Anderson (Environmental Protection Agency)

David W. Gaylor (Food and Drug Administration, National Center for Toxicological Research)

Richard A. Heller (Consumer Product Safety Commission)

Anson M. Keller (Occupational Safety and Health Administration)

Frank Kover (Environmental Protection Agency)

Joseph McLaughlin (Consumer Product Safety Commission)

Additional Participants in the Work Group

Roy E. Albert (Environmental Protection Agency)

Richard R. Bates (National Institute of Enviornmental Health Sciences)

David G. Hoel (National Institute of Environmental Health Sciences)

Umberto Saffiotti (National Cancer Institute)

Marvin A. Schneiderman (National Cancer Institute)

ABSTRACT—Three types of evidence can be used to identify substances that may pose a carcinogenic hazard: these types are designated in Part I of this report as 1) epidemiologic evidence derived from studies of exposed human populations, 2) experimental evidence derived from long-term bioassays on animals, and 3) supportive or suggestive evidence derived from studies of chemical structure or from short-term or other tests that are known to correlate with carcinogenic activity. Part II delineates the scientific bases for accepting evidence from these three sources and describes their relative contributions to the determination that a substance may pose a carcinogenic hazard. Further, it details the factors that should be considered in the evaluation of experimental and epidemiologic data for ascertaining the reliability and scientific merit of each source of evidence. It also specifies how certain types of limitations in data may require qualification of conclusions. Because data on experimental animals are currently the major source of information for assessing carcinogenicity, they receive the greatest emphasis. Features of experimental design and conduct that influence the evaluation of such studies are discussed, as are the criteria for making evaluations. The report is not intended to specify how such studies should be designed and conducted; rather, it discusses how data from experimental animal studies of widely varying content and quality should be evaluated for purposes of identifying carcinogens. Epidemiologic data and some of their limitations are discussed in less detail. Chemical structure and the short-term tests that correlate with carcinogenic activity are briefly described, as are their roles in providing suggestive or—if coupled with positive data on animals or humans—supportive evidence of carcinogenicity. In Part II are presented the criteria used to ascertain the adequacy of evidence purporting to show that a substance does not pose a risk of cancer. Part II also includes discussions of some types of experimental evidence that, if the extent and quality are adequate, may be used to show that certain carcinogenic responses observed in experimental animals may not be predictive of human response. Part III sets forth current methodologies for quantification of risk. Included are discussions of mathematical models available for extrapolation, within a biologic system, of cancer incidence data observed at experimental dose levels to estimate risks at the (usually much lower) levels that are of concern for humans. Also presented are the factors that should be considered in attempts to identify the human population(s) at risk and to define their conditions and levels of carcinogen exposure. Part III also deals with correlation of the magnitude of effects observed in one human population group or in experimental animals (under their conditions and level of exposure) with the magnitude of effects in the human population for which the estimate of risk is being made. Limitations in current risk estimation methodologies are described, as are the problems of ensuring that human risk is not underestimated. The issue of thresholds for carcinogens is discussed in the final section of Part III.

Table of Contents

Part I. Introduction
Part II. The Qualitative Determination that a Substance Poses a Carcinogenic Hazard
Definition and Extent of the Problem
Nature of Carcinogenesis and Carcinogenic Responses
Estimation of the Number of Carcinogenic Substances
Enhancing Factors
Variability of Effects of Carcinogens
Epidemiologic Evidence
Types of Epidemiologic Evidence
Disease Ascertainment
Evidence From Experimental Animals
Criteria for Evaluation of Experimental Design and Conduct
Experimental Design
Choice of the Animal Model
Number of Animals
Route of Administration
Identity of the Substance Tested
Dose Levels
Age at Treatment
Conduct and Duration of Bioassays in Animals
Criteria for Evaluation of Pathology
Pathology Examination
Evaluation of Pathologic Results

[1] Valuable guidance was received from Arthur C. Upton (Director, National Cancer Institute) and David P. Rall (Director, National Institute of Environmental Health Sciences). The Work Group acknowledges the assistance of Edward Allera (Food and Drug Administration); Ann Barton, Steven Jellinek, Richard Hill, and Ellen Siegler (Environmental Protection Agency); Steven Bayard, Donald Clay, and Raymond Woltman (Consumer Product Safety Commission); Charles C. Brown and James Sontag (National Cancer Institute); Carl Gerber (Office of Science and Technology Policy Executive Office of the President); Nathan J. Karch (Council on Environmental Quality, Executive Office of the President); and J. William Lloyd (Occupational Safety and Health Administration)

Internal Consistency of the Data
Reproducibility of Test Results
Evidence of a Positive Dose-Response Relationship
Concordance of Results
Evaluation of Tumor Incidence
Evaluation of Tumor Morphology
General Evaluation of Neoplastic Pathology for Carcinogenesis Bioassays
Statistical Analysis of Results
Short-Term Test for Carcinogens
Methods Based on Genetic Alterations
Methods Based on Neoplastic Cell Transformation
Evaluation of Short Term Test Results
Molecular Structure as Supporting Evidence in Identification of Carcinogens
Qualitative Judgmental Factors in Evaluation of Total Evidence
Part III. The Quantitative Estimation of Risk
Mathematical Models for High-to-Low Dose Extrapolation Within a Single Biologic System
The Models
Procedures
Characterization of Population Exposure
Sources of Human Exposure
Analytical Methods for Detection and Measurement of Exposures
Routes and Conditions of Exposure
Duration, Frequency, and Intensity of Exposure
Size and Characteristics of Exposed Populations
Extrapolation From Observed Effects to Estimates of Risks for Exposed Population
Correlations From Observed Human Population Groups to Others
Animal-to-Human Correlations
Lack of Predictable Thresholds for an Exposed Population
Summary of Risk Estimation
References

Part I. Introduction

This document describes the best judgments of the scientists in the agencies comprising the Interagency Regulatory Liaison Group (IRLG) on the scientific concepts and methods currently in use to identify and evaluate substances that may pose a risk of cancer to humans. These are fundamental steps in any program regulating carcinogens. The document was prepared by the Risk Assessment Work Group of the IRLG agencies and senior scientists from the National Cancer Institute (NCI) and the National Institute of Environmental Health Sciences.

The document describes 1) the basis for qualitative evaluation whether a particular substance presents a carcinogenic hazard and how the results of epidemiologic studies and animal bioassays, along with other types of information, are used in making that evaluation; and 2) the methods used for quantitative estimates of the carcinogenic risk posed by the substance, if such risk estimates are appropriate or required.

This document will provide a valuable scientific tool, to be considered with other information, in the evaluation of risk and ascertainment of the adequacy of experimental and epidemiologic methods used in that evaluation. It is an important step in ensuring that the regulatory agencies evaluate carcinogenic risks consistently. The IRLG agencies caution, however, that this document presently has no regulatory status. Its use will, of course, depend upon the statutory requirements of the individual agencies.

The agencies have subjected this document to scientific peer review through the submission of the document to the *Journal of the National Cancer Institute*. In addition, a public notice and comment procedure is initiated by this publication in the **Federal Register**. Since the Occupational Safety and Health Administration (OSHA) has already received extensive public comment on these and other issues regarding the development of its cancer policy rulemaking and will soon promulgate its policy, only the Consumer Product Safety Commission (CPSC), the Evironmental Protection Agency (EPA), the Food and Drug Administration (FDA), and the Food Safety and Quality Service (FSQS) will participate in the public notice and comment procedure on this document. At the conclusion of the notice and comment procedure, OSHA will consider whether revisions to its final cancer policy are appropriate. The four agencies emphasize that the goal of this process is to articulate a consistent policy on the scientific principles applicable to the identification and evaluation of substances that may pose a carcinogenic risk to humans.

Part II discusses the qualitative determination that a substance poses a carcinogenic hazard. Part III discusses quantitative estimation of risk.

Part II. The Qualitative Determination That A Substance Poses A Carcinogenic Hazard

The methods used for regulatory purposes in making a qualitative determination that a substance poses a carcinogenic hazard to humans are based on a substantial scientific consensus that has emerged from experience, research, debate, and review. Although some points need further clarification and definition, substantial agreement exists among the Federal regulatory agencies on criteria for evaluating the carcinogenicity of a substance.

In addition to determining that a substance may pose a hazard of cancer, regulatory agencies must consider other possible health hazards, and in some instances they are required to balance considerations of risk with other factors (such as possible health benefits or economic costs and benefits) in reaching regulatory decisions.

DEFINITION AND EXTENT OF THE PROBLEM

Nature of Carcinogensis and Carcinogenic Responses

The characteristic toxicologic event in carcinogenesis is a change in the regulatory mechanism of the target cells, resulting in self replicating cell lesions. The carcinogenic event so modifies the genome and/or other molecular control mechanisms in the target cells that these can give rise to a progeny of permanently altered cells. This progeny of cells constitutes the basis of the neoplastic disease. The expression of the toxic injury therefore does not derive from the same cells originally hit by the toxic agent nor from their functional products but rather from the proliferation of a new population of altered cells.

The critical molecular injury caused by specific carcinogens may be quantitatively extremely limited—even to a few cells—and may therefore not be detectable. What will make it manifest, through the subsequent growth of a clinically detectable neoplasm, is the proliferation of the altered cell population. The intensity of the pathologic response in a subject (i.e., the growth rate and spread of a cancer) depends on conditions of the host subsequent to the initial carcinogenic event and can be modified by other factors, such as enhancing agents and dietary factors. The continued progression of clinical manifestations of the carcinogenic process can occur in the absence of continued exposure to the carcinogen. Carcinogenic effects are therefore self-replicating toxic effects different from the common terminal toxic effects in which the manifestations of toxicity are due to altered functional products, degenerative changes, or death of the target cells themselves *(1)*.

A rigorous methodology must be followed in obtaining, reviewing, and documenting the data required for a determination of carcinogenicity from observations on humans and experimental studies. Both epidemiologic observations and experimental studies need to be correlated with information on the chemical and physical nature of the agents under consideration, their reactivity, and their fate in the environment and in the exposed

organisms. Evidence of carcinogenicity can be obtained from three sources:

1) epidemiologic evidence from exposed human populations;

2) experimental evidence form long-term bioassays in animals;

3) suggestive evidence derived from studies of chemical structure, reactivity, DNA damage and repair, mutagenicity, neoplastic transformation of cells in culture, induction of preneoplastic changes, or from other short-term tests that correlate with carcinogenicity.

In the evaluation of the results of carcinogenesis studies, the evidence obtained from epidemiologic observations or from experimental bioassays does not necessarily fall sharply into the two categories of positive and negative: In many instances the evidence may be insufficient for a definitive assessment.

Estimation of the Number of Carcinogenic Substances

Relatively few chemicals have been found to be carcinogenic. In fact, available evidence indicates that most substances do not cause cancer. The NCI's "Survey of Compounds Which Have Been Tested for Carcinogenic Activity" *(2–8)* and other literature surveys and reviews provide results of long-term animal bioassays on about 7,000 chemicals. Evidence of carcinogenicity on the basis of currently accepted experimental testing methods is available for less than 1,000 chemicals and possibly for as few as 600–800, *(9–34)*. Many of these substances were selected for testing because of their structural similarity to known carcinogens. Thus these data considerably overstate the true proportion of carcinogenic substances in the human environment. A critical review of the literature on carcinogenicity of chemicals has been undertaken by the International Agency for Research on Cancer (IARC) with the support and collaboration of NCI *(9–25)*. Of 368 chemicals evaluated in volumes 1–16 of the IARC monographs, some evidence of carcinogenicity was found for 247 *(35)*.

A small number of chemicals has been adequately studied by epidemiologic methods to determine whether a carcinogenic hazard exists. By one recent estimate, 26 chemical substances or processes have been identified as responsible for cancer induction in humans *(9–25, 35)*. Of those 26 substances, 6 were first identified as carcinogenic by tests in animals, whereas 20 were first identified by epidemiologic evidence.

Of the 368 substances for which carcinogenesis data were reviewed by the IARC, 221 showed some evidence of carcinogenicity from tests in animals, but these substances had not received adequate epidemiologic study to evaluate their effects in humans *(35)*. In addition, 15 occupational categories have been reported to be associated with excess cancer incidences without identification of a specific etiologic agent *(36–50)*.

Enhancing Factors

Experimental and epidemiologic data suggest that some agents may not be carcinogenic alone but substantially contribute to the development of cancer in subjects that have been exposed to carcinogens. Depending on experimental circumstances, these agents have been referred to as cocarcinogens, promoting agents, syncarcinogens, or more generally, modifying or enhancing factors *(51, 52)*.

Research on this category of agents suggests that they may work through a number of mechanisms of action, including *(51, 52)*: *a)* alteration of the uptake and/or distribution of carcinogens, *b)* modification of the metabolic activation of carcinogens, *c)* enhancement of the susceptibility of target tissues, and *d)* acceleration of neoplastic progression.

Current evidence suggests that some of these agents act by a mechanism that may be specific for particular organs or conditions of exposure. Because of the possible specificity of their mechanisms of actions, the activity of these agents may not be recognized by conventional bioassays. Since no common general pathway of action has been recognized, it is not expected that tests based on a single-mechanism end point will be applicable for the identification of a broad range of these substances.

Enhancing mechanisms may be a major factor in the development of human cancers; therefore, their identification and control may be important in cancer prevention. Since no general methodology yet exists for testing and evaluation of this entire group of substances, the special circumstances under which each may act must be carefully evaluated. Interpretation of a positive effect in a carcinogenesis bioassay as being due to one of these mechanisms would require rigorous documentation that a full carcinogenic process is not involved.

Variability of Effects of Carcinogens

Variability in the action of carcinogens may be due to inherent differences in susceptibility among species and strains of test animals and within populations of humans, and also to variability in the intrinsic differences in carcinogenic reactivity of individual agents. For example, aflatoxin B_1 is strongly carcinogenic in rats but is ineffective in several strains of adult mice *(53)*. β-Naphthylamine is carcinogenic for humans, dogs, and several other species, but this compound has not produced tumors in rats *(54)*. With some other carcinogens, there is a greater concordance of results among species: Dimethylnitrosamine has been found to be carcinogenic in all of the strains of vertebrates tested *(55)*.

Species and strain differences in susceptibility to carcinogens may be due to factors that affect transport and metabolism, which in turn determine the effective dose of the ultimate form of the carcinogen delivered to target cells. These differences may also be due to inherent variations in susceptibility to neoplastic transformation of different organs in different species *(56)*.

Differences in the level of carcinogenic effect of individual agents can only be compared with precision under strictly defined conditions of dosage and biologic end points. Frequently the level of effects, even under strictly defined conditions, will show marked variability depending on the test system used. Nevertheless, in the extreme, some carcinogens are clearly more effective than others by several orders of magnitude *(9–25)*. However, such comparative potency estimates must be made with caution.

EPIDEMIOLOGIC EVIDENCE

Evidence of carcinogenic activity of an agent can be obtained from epidemiologic studies when evaluation of the observations shows that the test agent causes an increased incidence of neoplasms or a decrease in their latency period.

Evidence from studies of human populations identifies carcinogenic chemicals to which those populations were exposed in the past. Many substances that have been identified as carcinogens in humans were discovered by epidemiologic studies of exposed workers; this evidence dates from 18th-century observations of cancer in chimney sweeps to more recent observations on dye workers, asbestos workers, and workers in certain chemical industries *(31)*. It was noted early that clinical signs of cancer are delayed for a long time after initial exposure to carcinogens. This period of latency—often 5–40 years from initial exposure until the disease appears—makes prompt detection of newly introduced carcinogenic substances by epidemiologic studies nearly impossible.

As more substances are introduced into the human environment and as

more are tested experimentally, it is expected that a larger proportion will be identified as carcinogenic; this will be followed by adequate control measures, so that epidemiologic confirmation may become impossible.

Types of Epidemiologic Evidence

Types of epidemiologic evidence of carcinogenicity in humans include neoplastic response directly related to duration and dose of exposure, incidence or mortality differences related to occupational exposure, incidence or mortality differences between geographic regions related to environmental rather than genetic differences, altered incidence in migrant populations, time trends in incidence or mortality related to either the introduction or removal of a specific agent from the environment, case-control studies, and the result of retrospective-prospective and prospective studies of the consequences of human exposure. Clinical case reports may also provide early warning of a potential carcinogen (*57*).

The two main types of epidemiologic studies used to establish evidence of a carcinogenic hazard are cohort studies and case-control studies (*58*). Epidemiologic cohort studies involve the comparison of groups differently exposed to a substance. The comparison may include *a*) totally unexposed versus exposed groups, *b*) groups having distinctly different levels of exposure, or *c*) rates in exposed groups versus rates prevailing in the general population. The groups need to be comparable for demographic factors such as age, sex, and race, and controlled for exposure to known carcinogens.

Epidemiologic case-control studies involve comparison of people with a given cancer type versus people without the disease but otherwise comparable with respect to appropriate demographic variables, to ascertain if they differ in exposure to the cancer hazard under investigation.

Epidemiologic findings gain greater force with increasing numbers of well-conducted studied that show similar effects from a given substance under different circumstances.

Absence of a positive statistical correlation does not by itself demonstrate absence of a hazard. Whereas negative epidemiologic data usually do not adequately establish the noncarcinogenicity of suspected materials, such negative data obtained for a given agent from epidemiologic studies of sufficient extent and duration may indicate the upper limits for the rate at which a specific type of exposure could affect the incidence and/or mortality of specific human cancers under the conditions of observation.

The detectability of a carcinogenic effect in a group of humans depends on several factors, including the duration and extent of exposure, size of the exposed population, and background rate of cancer in the target organ. Evaluation of epidemiologic studies requires a knowledge of the smallest possible increase in tumor incidence detectable under the conditions of each study. Such information has rarely been included in published reports. This information is, however, of critical importance in the evaluation of apparently negative studies.

The larger the number of persons in the exposed and control groups and the greater the similarity of these groups for factors other than exposure to the suspect carcinogen, the more likely will an effect be detected. Often, only a small number of humans exposed to a substance can be studied, conditions of exposure are inadequately defined, and records are incomplete. Thus a carcinogenic effect can be easily missed by epidemiologic methods, especially when common types of cancer (such as cancer of the lung, breast, colon, or rectum) are studied, inasmuch as these types often require a large excess of risk before a causal relationship can be identified for the exposure to a particular substance. Substances distributed widely in commerce or in the environment are particularly difficult to study by epidemiologic methods unless high risk ratios are observed, because it is often impossible to identify unexposed groups as controls or to separate groups with high and low exposure. The problem of adequate controls is further compounded by the long latency of cancer, during which multiple opportunities exist for exposure to other potentially carcinogenic substances and modifying factors. The effects of such other exposures on rates of cancer are rarely known, although in some instances they were found to be more than additive (*22*).

Disease Ascertainment

Because the effect under consideration is cancer morbidity or mortality, it is important to establish the validity, consistency, and reliability of the methods used to ascertain that neoplastic disease is clinically present or that it causes death.

Disease classification is also important, and uniform criteria of tumor nomenclature are needed. Some types of cancer may be classified under a generic name in such a way that changes in their frequency may be missed if only the generic classification is used. Some members of a population may be "lost" to a study if their disease conditions cannot be adequately ascertained.

Specific uniform procedures are not recommended here, but careful attention needs to be given to the extent to which these problems may affect comparison of relevant characteristics between groups.

In the statistical evaluation of cancer incidence or mortality differences, there has been a strong tendency for particular confidence levels (e.g., 95%) and particular probability values (e.g., $P=0.05$ or $P=0.01$) to be used as standard points for a finding of statistical significance. It is recognized that probability values fall along a continuum and should be so reported. The uniform use of a standard probability value is not suggested. Regulatory needs are best served by accurate estimates of the possible role of chance in accounting for observed differences.

The most important parameter in the assessment of an epidemiologic study is the magnitude of the effect measured; its interpretation is tempered by considerations of biologic plausibility, bias, confounding factors, and chance.

EVIDENCE FROM EXPERIMENTAL ANIMALS

Evidence of the carcinogenic activity of an agent can be obtained from bioassays in experimental animals showing that the test substance causes either an increase in the incidence of neoplasms or a decrease in the latency period.

The experimental design and conduct should be reviewed for quality and accuracy, and the results should be evaluated statistically for significance, with the only major experimental variable between control and experimental groups being the presence of the test substance. Positive results observed in more than one group of animals or in different laboratories and the demonstration that the occurrence of neoplasms follows a dose-dependent relationship provide additional confirmation of carcinogenicity. Determination that a causal relationship exists between a test treatment and the responses observed in a bioassay is a complex judgmental activity that includes evaluation of the identity of the test agent and the biologic test system, the conditions of exposure, the methods of observation, and the qualitative and quantitative nature of the pathologic response. The assessment of carcinogenicity therefore relies upon the

judgment and experience of professionals. The following discussion refers to aspects of experimental design and conduct that concern evaluation of results. They are not intended as a prescription of protocols.

Criteria for Evaluation of Experimental Design and Conduct

Experimental Design

Commonly recommended requirements for a thorough assessment of carcinogenic potential in experimental animals generally include *a*) two species of rodents, *b*) both sexes of each, *c*) adequate controls, *d*) a number of animals sufficient to provide an adequate resolving power to detect a carcinogenic effect, *e*) treatment and observation extending to most of the lifetime of the animals at a dose range including one level likely to yield maximum expression of carcinogenic potential, *f*) detailed pathologic examination, and *g*) statistical evaluation of results (*9–25, 27, 31, 32, 57, 59–73*).

Positive results obtained in one species only are considered evidence of carcinogenicity. Positive results in more limited tests (e.g., when the observation period is considerably less than the animal's lifetime), but by experimentally adequate procedures, are acceptable as evidence of carcinogenicity. Negative results, on the other hand, are not considered evidence of lack of a carcinogenic effect, for operational purposes, unless minimum requirements have been met.

Choice of the Animal Model

The animals used most often for carcinogenesis bioassays are mice, rats, and hamsters. These animals are used extensively because 1) their natural life-spans are short; 2) they are easier to breed and handle in large numbers than larger animals; 3) they are inexpensive and easy to care for; 4) inbred strains exist that are genetically homogeneous for such traits as "background" cancer rates, susceptibility to carcinogens at specific organ sites, longevity, and response to husbandry systems. Adequately designed and performed studies in other mammalian species may also provide useful information on carcinogenicity. For human risk evaluation, data obtained from bioassays with the use of nonmammalian species can presently provide only suggestive evidence if positive but permit no conclusion if negative.

Experience on the background incidence of tumors in the colony of animals used for testing, obtained over a period of years by extensive observation of untreated animals under the same general maintenance conditions (historical colony controls), is useful in assessing the relevance of experimental findings, such as the appearance of rare tumors.

Rodents with different types of genetic homogeneity have been used for carcinogenesis bioassays. These include *a*) inbred strains, *b*) first-generation hybrids of parents of inbred strains, *c*) randombred animals from a closed colony, *d*) noninbred animals, and *e*) animals of unspecified strains or origins. As the genetic and/or environmental variation increases, so does the need for concern about the variation of background tumor incidence.

A particular problem is posed by the use of certain strains of rodents in which particular tumor types reach a high frequency, often well above 50%, in untreated controls. Examples of such strains include mice of strain A for lung adenomas, strain AKR for lymphomas, strain C3H/HeN males for liver cell tumors and C3H females for mammary tumors, and females of several rat strains for mammary fibroadenomas. Although viral factors have been identified in the etiology of mouse AKR leukemia and C3H mammary tumors, no such factors are known to be at work for the other types mentioned above. The effect of carcinogens has been clearly demonstrated in all of the above strains by detection of substantial decreases in the latency period, by definite increases in incidence or multiplicity of these tumor types, and by the induction of tumors of other histologic types in the same or other organs (*2–25*). Caution must be used, however, in evaluating the significance of a higher incidence of these tumors in a treated group compared with concurrent controls when the incidence in the treated animals falls within a range commonly seen in historical controls from the same colony.

Background incidence rates for tumors of the lung, liver, mammary gland, and hematopoietic tissues are much lower in many other strains of mice, and for tumors of the mammary gland in other strains of rats. In these other strains, no unique biologic trait distinguishes the types of tumors mentioned above from many others, and no reason has been demonstrated for considering that they have any different significance than tumors in other organs as indicators of a carcinogenic response, under otherwise appropriate test conditions.

Number of Animals

The number of animals in each group to be effectively considered for the evaluation of carcinogenesis test results is the number in which detection of carcinogenic effects could be expected. This number is obtained by subtracting from the number of animals started on the test the number of those lost to adequate observation (e.g., by intercurrent death followed by cannibalism or autolysis). The number of animals on which complete pathologic examination is conducted is important in the evaluation of tumor pathology.

Positive results can be obtained in tests with the use of a small number of animals if the test is otherwise adequately designed and conducted and if the tumor response is significant. For example, in a group of 15 animals, if 12 show a well-defined neoplastic lesion of a kind rarely seen either in matched or historical controls, the finding is positive. However, a negative finding in a group of 15 animals is not adequate evidence that the test agent is not carcinogenic.

Ideally, the number of animals required to provide adequate negative evidence would be such that an excessive risk would not arise if the test failed to detect carcinogenicity. The likelihood that such a risk would not arise increases both with the number of animals on test and the extent to which human exposure levels are exceeded. The probability of a false negative finding also depends on the background tumor rate in the control animals. For example, if a one-sided level of statistical significance of 5% is used with 55 animals, there is an 80% chance of detecting a tumor rate of 20% in the treated animals for whom the control rate is 5%, whereas 130 animals are required to detect the same difference if the control rate is 30%. The number of animals tested may need to be increased if the number of humans exposed is large or if a small margin of safety exists between the animal dose and the human exposure.

In practice, resource limitations often require a trade-off between the number of animals used and the number of substances tested in order to control the total cancer burden resulting from chemical carcinogens. This is particularly true with substances whose toxicity limits the test dose to a low multiplicity of human exposure levels. In those instances, it may be necessary to accept a lower than ideal degree of "negative evidence."

Route of Administration

A key factor in the comparison of an experimental result to the human situation is to assess whether cells

capable of malignant transformation are exposed to the reactive carcinogenic agent(s) in both the human and the experimental animal, regardless of whether transformation occurs in identical organs and cell types. Although this comparison is most readily made from experiments with animals in which the route of administration is the same as that in humans, other routes of administration may also be comparable and provide results useful for evaluation of the human hazard. For example, some chemicals are rapidly absorbed by inhalation, circulated through the body, and metabolized by the same pathways that occur following intravenous exposure (*74*).

Some routes of administration in animals may fail to provide adequate metabolic activation or exposure of target tissues and therefore may lead to false-negative results. This possibility should be assessed in evaluating negative results obtained when the route of administration in animals differs from the route of human exposure.

Generally, the route should be one that leads to absorption and distribution of the test substance. The induction of tumors at a remote site in the animal is evidence of absorption, distribution, and possible metabolic activation of the test substance. If exposures of both humans and animals involve absorption of the substance, any route of administration in animals may be regarded as relevant for a qualitative demonstration of human hazard unless there is evidence that the route of administration in the test species results in the production of carcinogenic substances (from degradation or metabolism) which does not ever occur with human exposure.

When tumors appear only at the site of injection or implantation, careful review is necessary. If there is reason to believe that the tumors occur as a result of "solid state" carcinogenesis (*75, 76*), the results may be inappropriate for extrapolation to human exposure. If, however, the test material produces tumors at the site of injection or implantation as a result of its chemical reactivity, this response is an indication of carcinogenicity.

There are a number of practical reasons for studying certain substances in animals by a route of administration different from the expected route of human exposure. If a substance under test is highly volatile, accurate administration in food may be difficult because of evaporation; often feeding through a stomach tube is used so that the dose may be measured with greater accuracy. Even for nonvolatile test substances, a stomach tube may be used when it is important to know the exact amount of a substance administered to the test animals. The administration of high doses of a test substance with a disagreeable odor or taste may require the use of routes other than ingestion.

Thus experimental exposures need not necessarily be by the route of human exposure in order to be meaningful, but possible physiologic and metabolic differences related to routes of absorption and distribution should be considered in the assessment of their relevance.

Identity of the Substance Tested

Substances to which humans are exposed through their occupations, the environment, and the products they use vary widely both in the number and the proportion of contaminating impurities. A full assessment of the carcinogenicity of an impure mixture ideally requires that each component be tested individually at an adequate dosage and that the mixture itself be tested in order to detect cumulative or synergistic effects. Limitation of resources makes this ideal approach impractical as a routine. It is common, therefore, simply to rely on tests either of the product to which humans are exposed, including the impurities present, or of the purified principal chemical substance(s). Because the products may vary according to procedures used in manufacture and processing, tests for one commercial product may not be applicable to another product containing a different set or level of impurities. Change in the manufacturing process of a product may require additional tests to confirm the safety of the new product if the change involves the introduction of different impurities or a substantial increase in the amount of any single component of the product. Even though it is accepted practice to test mixtures, the nature of any impurities known or likely to be present as a result of the manufacturing process is important and may require separate examination or testing. Information on the carcinogenicity of any single chemical in a mixture is an indication of potential hazard of the entire mixture. However, negative results obtained on a component of a mixture may not reflect the potential carcinogenicity of the entire mixture.

Dose Levels

"Testing should be done at doses and under experimental conditions likely to yield maximum tumor incidence." This recommendation of an FDA advisory committee summarizes the issue of test doses (*68*).

Bioassays with the use of a few dozen or even a few hundred animals have relatively low sensitivity for detection of carcinogenic effects. Millions of people of varying degrees of sensitivity or exposure may be exposed to the substances under evaluation. Although a test animal cannot be strictly viewed as a "surrogate" of a large number of people without oversimplification, the role of animal tests is to provide maximum detectability of carcinogenic effects within the already narrow confines of test sensitivity. Under otherwise identical conditions, the greater the ratio of test exposure to human exposure, the greater is the safety margin provided by a negative result in a carcinogenesis bioassay.

It is generally recommended that more than one dose level be tested. Most carcinogenic effects show a positive dose-response relationship; but maximum tumor incidence in test animals may not occur at the highest dose when competing toxicity prevails. The highest test dose that can be effectively used in a carcinogenesis bioassay is limited by the conditions of absorption, by the amount that the animal can tolerate during lifetime administration without unwanted toxic side effects, and by the effects on nutrition when the chemical constitutes too large a proportion of the diet.

Results of bioassays done at doses and under conditions permitting maximum expression of carcinogenicity provide a sound basis for the identification of a carcinogenic hazard or its absence.

It is important to estimate the highest dose level that will be tolerated by the test animals during lifetime admistration, i.e., the estimated maximum tolerated dose (EMTD). The EMTD is defined as the highest dose that can be administered to the test animals for their lifetime and that is estimated not to produce *a*) clinical signs of toxicity or pathologic lesions other than those related to a neoplastic response, but which may interfere with the neoplastic response; *b*) alteration of the normal longevity of the animals from toxic effects other than carcinogenesis; and *c*) more than a relatively small percent inhibition of normal weight gain (not to exceed 10%) (*71*).

The EMTD is determined on the basis of prechronic tests and other relevant information. If the test reveals that the EMTD is too high to meet the conditions defined herein, positive results obtained above the EMTD are acceptable as evidence of carcinogenicity unless there is convincing evidence to the contrary. Alternatively, negative results obtained

above the EMTD are considered inadequate unless particularly strong and specific scientific reasons justify their acceptance as negative. Positive results obtained at or below the EMTD provide evidence of carcinogenicity.

Age at Treatment

Because of the long latency period required for induction and manifestation of tumors, treatment should be started in young animals, and the animals should be observed for a carcinogenic response through most of their expected life-spans. The older the age at first treatment, the shorter is the remaining life-span available for tumor development; consequently, the smaller is the chance of detecting delayed carcinogenic effects.

Although treatment is often started in young adult animals soon after weaning, some protocols call for treatment soon after birth (neonatal) or during fetal development (transplacental). The rationale for exposing test animals transplacentally or neonatally is based on the greater susceptibility of certain organs to carcinogens during early development. Such susceptibility has been demonstrated in several species, including those commonly used for bioassays (*77, 78*). Animals first treated during the perinatal period must be also treated and observed throughout their life-spans to obtain a valid negative response.

Virtually any agent that is carcinogenic in adult animals can be expected to have some carcinogenic effect when administered to young animals including the neonate and the fetus. Unless a substance is demonstrated to be exclusively carcinogenic when administered to the fetus or neonate, enhanced perinatal susceptibility to carcinogens should be considered not a separate and distinct toxicologic property; rather, it should be a means for increasing the sensitivity of conventional bioassay procedures by extension of the exposure period to these earlier and more susceptible portions of the life-span.

It should be emphasized that these protocol modifications greatly complicate dose selection and experimental design. An agent may be significantly more toxic to the fetus, the neonate, or the pregnant or lactating female animal than to the normal young adult of either sex. This requires independent determination of the toxicity and EMTD. Furthermore, individuals in the litter of a treated pregnant animal cannot be considered independent units for statistical evaluation of effects.

Conduct and Duration of Bioassays in Animals

A long-term bioassay for carcinogenesis in animals is a complex procedure requiring control of many variables for several years. Professional experience and knowledge of the relevant biologic parameters are needed for adequate quality control. Detailed guidance on procedures is provided by reports such as the FDA's "Good Laboratory Practice Regulations" (*79*) and the NCI's "Guidelines for Carcinogen Bioassays in Small Rodents" (*71*).

Review of the observations made during the bioassay (on food intake, weight, clinical course, and pathologic conditions of the animals) provides a basis for determining whether these experimental variables are recorded in sufficient detail and are internally consistent to permit independent assessment of their validity.

The purpose of these bioassays is primarily to provide maximal opportunity for detection of a neoplastic response; therefore, the longer the period of observation the better is the chance of detecting delayed effects. A "point of diminishing return" can be reached when intercurrent disease and/or survival considerations make the observation or evaluation of old animals particularly difficult. It is expected that the animals will be observed for most of their life-spans. The best negative evidence for the carcinogenicity of a substance is obtained from tests in which both exposure and observation last through all or nearly all of the expected life-spans of the animals under study.

Negative results decrease in value as the exposure and observation periods are shortened, and they become practically meaningless if these periods are shorter than half the life-spans of the animals. When some animals die early in the course of a test, the value of the test is reduced as a function of the percentage of animals dying without tumors at periods markedly shorter than the life-span of the species. Sometimes, a positive carcinogenic response may be definitely demonstrated in a shorter period of observation if the experiment is adequately controlled; in such cases the test is considered valid even if it is shorter than usual (*80*).

Accepted procedures include *a*) the observation of all animals in the study (treated and control groups) until their spontaneous death, *b*) the sacrifice of animals that show clinical signs of severe illness or impending death (sacrifice of moribund animals prevents losses due to autolysis and provides better observation of tissue pathology), and *c*) terminal sacrifice at a scheduled date near the end of the life-span (e.g., after 24 months on test).

Criteria for Evaluation of Pathology

Pathology Examination

The evaluation of carcinogenesis bioassay results rests on the extent and accuracy with which organs and tissues of both treated and control animals are examined for morphologic changes. After the termination of a bioassay, the only physical evidence that can be used to permit reevaluation of results, even years afterwards, is represented by the written descriptive and diagnostic records, the graphic or photographic records of gross or microscopic observations, and most importantly, the original slides of tissue sections for microscopic examination. The histologic slides are of critical importance as a lasting direct documentation of the conditions of normal and abnormal tissues and organs, both for scientific and regulatory purposes. Quality and extent of pathologic documentation are therefore major factors in establishing the validity of bioassays in animals (*71, 79*).

Although a well-conducted pathologic examination cannot generally rescue a poorly designed or badly conducted bioassay, inadequate pathologic examination can significantly reduce or eliminate the value of an otherwise well-conducted experiment. Among the factors to be considered in evaluation of the pathologic examination are:

1) the care and thoroughness of gross tissue examination and the qualifications of the persons conducting this examination to recognize abnormalities;

2) the quality of preservation, sectioning, and staining of tissues;

3) the accuracy of the record-keeping system used for labeling tissues as they are moved from the animal through slide-processing to final diagnosis and reporting;

4) the extent of selection of normal and abnormal tissues for microscopic examination; and

5) the qualifications of the pathologist making the microscopic examination.

The numbers of tumors or other lesions diagnosed by the pathologist are not a thorough assessment of incidence unless each factor is adequately considered, controlled, and documented.

The strength of evidence provided by a bioassay also depends on the number of tissues examined. Failure to observe excess tumors in treated animals cannot be considered evidence of the absence of a carcinogenic hazard unless all

organs have been examined grossly and all grossly visible suspect lesions have been examined microscopically. In a large organ, the taking of a single random section for histologic examination can result in failure to detect small tumors. Thus multiple cuts through such organs should be made.

It is also important to open and search the entire cavity of all hollow organs for abnormalities. For example, the entire length of the gastrointestinal tract should be opened and inspected. Grossly visible lesions should be selected for histologic examination, and if they are not subsequently observed on tissue slides, preparation of additional sections may be necessary until the gross lesion is verified histologically.

Furthermore, histopathologic examination should be made of major organs in the treated groups and matched controls, and specific organs should be studied in detail in all dose groups and controls in which there is either gross or microscopic evidence of lesions. Major organs are defined in the NCI's "Guidelines for Carcinogen Bioassays in Small Rodents" (*71*). Positive evidence of carcinogenicity may be valid for a particular organ if it has been adequately examined in both treated and control groups. Negative reports are inadequate for any organ that has not received careful gross examination in all animals and histologic examination of suspect lesions. The more limited the number of organs examined grossly and microscopically, the less the value of the experiment in providing evidence of a negative result.

Evaluation of Pathologic Results

The evaluation of bioassay results and their quality requires a detailed review and expert judgment of all the experimental conditions and observations, including the identity of the test substance; the conditions of administration; the identity, source, and characteristics of the test animals; the accuracy and systematic recording of observations; the extent of pathologic examination; and the competence of the investigator. Meticulous and detailed documentation is of great importance.

Several criteria are applied in the evaluation of bioassay results.

1) *Internal consistency of the data* is important in reviewing the conduct of the test. Apparent inconsistencies should be investigated by analysis of records.

2) *Reproducibility of test results* can be demonstrated within a single experiment (in different groups of similarly treated animals or in different dose-level groups) or in separate bioassays conducted with the same experimental design in the same or in different laboratories. Evidence of reproducibility adds greater confidence to the evaluation of results. Statistical considerations provide an estimate of the level of detectability of an effect and the consequent level of probability that the effect may be missed in a repetition of the test in a given number of animals. Apparent contrary results in any two tests may be simply an effect of chance variation and may be fully compatible with an identical mechanism and level of activity of the test compound.

3) *Evidence of a positive dose-response relationship* adds further confidence to the evaluation of a positive test, but lack of it may be due to testing in a portion of the dose-reponse curve with a shallow slope or even with a declining slope due to competing risks. In the presence of positive results in well-designed, well-conducted tests, evidence of reproducibility and positive dose-response relationships is not necessary to reach a conclusion of carcinogenicity.

4) *Concordance of results* obtained under differing test conditions (e.g., different species, different routes of administration, or markedly different basal diets) provides greater confidence in the evaluation of both positive and negative studies, but it has a different meaning from "reproducibility" within the same tests or under the same conditions. Lack of concordance from tests performed under different conditions does not, in itself, detract from the validity of the positive test. Reasons for a discordance in observation may be identified by evidence obtained during a test or may be sought through further research.

The response to carcinogens in different animal species and even strains is known to vary greatly because of genetic, metabolic, nutritional, and other factors that effect susceptibility in a given test animal. Present knowledge indicates that a substance that is clearly carcinogenic in one test species is likely to be carcinogenic in other species, that it may take extensive tests in several species to demonstrate this correlation, and that the responsive target tissues or organs and the types of tumors induced in different species may vary greatly. Therefore, although concordance of positive results (even if different tumor types are involved) adds support to an evaluation of carcinogenicity, the finding of negative results in some other species generally does not detract from the validity of a positive result as evidence of carcinogenicity for the test substance.

In this respect, positive results supersede negative ones. The assessment of such apparent discrepancies in results requires consideration of all experimental variables, since apparently negative results may derive from limitations in the sensitivity of the test (e.g., early scheduled sacrifice, limited extent of pathologic examination, and statistical probability). If the positive result is itself not fully conclusive or if reasons exist for questioning its validity as evidence of carcinogenicity, the result is generally classified as "inconclusive" or "only suggestive" even in the absence of other negative test results.

5) *Evaluation of tumor incidence* is made on the basis of the pathologic findings and therefore depends on professional diagnostic judgment. Tumor incidence is evaluated by consideration of all tumors of specific organ sites or anatomically or physiologically related systems. At present there is considerable uncertainty about the interpretation of carcinogenic responses in terms of the total tumor yield in contrast to the response in terms of a statistically significant increase of tumors in specific target organs or tissues. Traditionally, carcinogens have been recognized in studies on humans and animals by a decisive increase in tumors of target organs. However, it is conceivable that a general increase in total tumor yield, in the absence of an excess incidence in one or more target tissues, could occur—for example, by a promoting effect that generally increases the spontaneous incidence of tumors in test animals or by the action of a multipotent carcinogen whose response did not reach statistical significance in any one organ even at the maximum tolerated dose. In some instances, however, control animals may have a high frequency of tumors at certain sites (e.g., testicular tumors in F344 male rats). In such instances, a simple cumulative count of tumor-bearing versus tumor-free animals may fail to reveal carcinogenic effects in the treated groups. Prudent judgment is needed on the appropriate categorization of tumors used to evaluate induced effects.

A positive result in a carcinogenesis bioassay can be based on evidence of the induction of an increased incidence or a substantially decreased latency period. The latter is often difficult to establish. Determination of the latency period can be made by various techniques of observation during a bioassay. If both test and control animals are sacrificed at a fixed time, only the early part of a temporal distribution curve may be observable; consequently, the estimate of the

average latency period for all tumors or tumor-bearing animals may be artificially altered. If the test and control groups are allowed to live out their life-spans, the comparison of latency periods must take into account the relative survival and the number of animals at risk, particularly in the case of competing risks.

The methods used in estimating the latency period must be defined in the context of each bioassay. It is always difficult to determine the exact onset of a neoplasm. Morphometric criteria may be used for tumors (e.g., skin or subcutaneous tumors) detectable during clinical observation of the animals and a minimum size may be established as a criterion for identification. For neoplasms of the internal organs it is practically impossible to determine an adequate time of onset: Methods such as palpation of the abdomen are highly subjective and generally unreliable. Serial sacrifice studies provide excellent data on time to tumor induction, but they should not be substituted for adequate numbers of animals under lifetime observation. In most instances, what is referred to as latency period is the time between the beginning of the exposure and the observation of a tumor at death. This parameter is obviously influenced by all the factors that determine time of death, e.g., intercurrent diseases, other tumors, or growth rate of individual tumors. Here too, the judgment of experienced pathologists may provide critical evaluation of such aspects as tumor size, location, cell differentiation, and invasion; these factors may contribute to an estimate of temporal sequence.

The observation in treated groups of tumors that are considered rare in untreated and historical controls may raise considerable suspicion even when their incidence is below the required level of statistical significance. Careful review and cautious judgment are necessary in their evaluation; often the rarity of a tumor type is estimated on the basis of a small control population. The occurrence of one or a few neoplasms of a kind, however rare, is not necessarily evidence that a substance is carcinogenic in the absence of other supporting evidence.

6) *Evaluation of tumor morphology* in the final analysis of bioassay results is highly dependent on the way in which pathology data are categorized. It is incorrect, for example, to subdivide diagnoses into so many individual categories based on different stages of disease or different morphologic features that no single category is large enough to be statistically significant. At the other extreme, it is incorrect to group unrelated end points in a way that maximizes the opportunity to find statistical significance, whether or not such groupings are biologically meaningful.

Carcinogenic and chronic toxic effects of a chemical on an organ, tissue, or cell develop through a series of stages from minimal changes to advanced and possibly fatal end points (*81*). The stage reached at any particular time is related to the dose of the substance, the conditions of exposure, the time elapsed since beginning of exposure, and host susceptibility factors. Early lesions that are pathognomonic of a disease process resulting from toxic chemicals should be grouped with more advanced lesions, whether or not the animal has survived long enough for the process to develop to the latest stages. The carcinogenic process may go through early stages including atypical hyperplasia, carcinoma in situ, and/or historically benign tumor before progressing to a clearly malignant stage. Although the stage of development is of critical importance in clinical oncology for assessing the prognosis of a patient at the time of therapy, it is not relevant in deciding whether a chemical is capable of inducing cancer as long as the induction of lesions recognized as neoplastic is conclusively demonstrated.

The induction of preneoplastic lesions in the process of cancer development is an indication that the test substance is capable of inducing cancer in a susceptible host given sufficient exposure and time for cancer to arise. Care must be taken, however, to distinguish atypical hyperplasias that are pathognomonic of neoplastic progression from other nonspecific or reactive hyperplasias.

In the evaluation of bioassays, the concern is with the capability of a test substance to react with a biologic system to give rise to a neoplastic response that may develop through all stages to malignancy. One issue is whether or not the response is the kind that stops at the benign stage and never evolves further to the invasive and metastasizing stage. Few if any tumor types are presently known to belong to this category, which could be called "permanently benign" tumors. For benign tumors, no specific mechanism of induction is known that can be distinguished from the mechanisms of induction of other neoplasms. Moreover, no established body of evidence exists showing that certain substances or groups of substances are capable of inducing exclusively permanently benign tumors without ever inducing any more malignant ones. The mammary fibroadenoma is generally considered to be a benign tumor in both the human (*82*) and the rat (*83*), and it has been suggested that its experimental induction provides little evidence that the inducing agent can cause cancer. X-rays or carcinogenic polycyclic aromatic hydrocarbons, however, which principally induce fibroadenomas in some rat strains, induce mostly malignant adenocarcinomas in other strains; the genetic characteristics of the animal rather than the inducing agent determine whether benign or malignant tumors develop (*84*). Thus the induction of benign tumors, even of a type that rarely progresses to a malignant stage, must be considered a warning that the inducing chemical may be capable of causing cancer in some humans. The induction of benign neoplasms, even if they were demonstrated to be of a permanently benign type, would therefore be considered evidence of carcinogenic activity unless definitive evidence is provided that the test chemical is incapable of inducing malignant neoplasms.

Neoplasms at a benign stage may jeopardize the health and life of the host. Furthermore, it is extremely difficult to rule out the presence of malignant changes simply on the basis of a limited histologic examination of the primary tumor, because focal malignant change or local invasion may have occurred in other areas of the tumor that were not examined microscopically. Similarly, it is very difficult to rule out the metastatic spread of a neoplasm that may be biologically capable of metastasizing without an extremely detailed search for metastases, which can begin as small foci of one or a few cells lodged in the arteriolar walls of peripheral organs (*85*). The frequency of observation of such metastases depends directly on the amount of peripheral tissue that is examined (*86*).

Another case to be considered is the combination of neoplasms diagnosed as benign and malignant. This may include instances in which the incidence of histologically malignant tumors is only a relatively small fraction of the total tumor incidence but represents the most advanced stages of the neoplastic response. Although the number of tumors diagnosed as malignant may not reach statistical significance as such in the number of animals at risk, the total neoplastic response (benign and malignant) may be clearly significant.

Some common types of neoplasms found in carcinogenesis bioassays in laboratory rodents are among those

often diagnosed as being at a benign stage when observed in test animals. Examples include lung adenomas, skin and bladder papillomas, liver cell adenomas (hepatomas), and hemangiomas in various organs. All of these tumor types are known to progress to frank malignant stages. No pathogenetic mechanisms have been identified that could demonstrate that the induction of such tumors, whether in a benign or malignant stage, in otherwise appropriate, comparable, and well-controlled experimental conditions, provides any different kind of evidence for carcinogenesis than the induction of other tumor types. In the evaluation of tumor incidence, therefore, neoplasms in different stages of progression are counted together.

7) *General evaluation of neoplastic pathology for carcinogenesis bioassays* includes consideration of the total number of animals with tumors in each group, the total number of individual tumors, and the index of tumor multiplicity in tumor-bearing animals. The tumor response can be further characterized by a detailed observation of the tumor morphology and related preneoplastic changes. The extent of tumor growth and spread and special morphologic characteristics may give useful indications of the time of development of the neoplastic response. The quality of the pathologic response is determined by a comprehensive evaluation of all the pathologic changes observed in both treated and control animals. Special attention is required in the evaluation of toxic effects other than carcinogenicity, because their pathologic manifestations have to be distinguished from those due to the neoplastic response.

The organs and tissues that are the targets of carcinogens may vary greatly in different species and even under different exposure conditions; therefore, no direct analogy of morphologic response can be expected from a carcinogen in animals of different species and in humans. Examples are known both of widely different target sites [e.g., benzidine induces bladder carcinoma in humans and cholangiomas and liver cell carcinomas in hamsters and rats (*87*)] and of similar responses [e.g., vinyl chloride induces the same type of angiosarcomas of the liver in humans, rats, and mice (*88*)].

Special conditions of tissue exposure or reaction may result in a tumor response by mechanisms that appear due to physical rather than chemical properties of the test material. The following conditions are evaluated differently in this respect:

a) The induction of sarcomas around a "solid state" implant of the test substance into a connective tissue is not considered an indication of the carcinogenicity of that substance when it is administered in another physical form (*75, 76*).

b) The induction of a carcinogenic response by asbestos and other fibrous materials by a mechanism linked to certain physical characteristics such as fiber length and diameter is recognized as a basis for categorizing the exposure to such fibrous materials as a carcinogenic hazard (*22*).

c) The effect of particulate materials in the induction of respiratory neoplasms, when they are administered jointly with certain carcinogens (probably through their capacity to absorb and retain carcinogens, to penetrate the respiratory tract tissues, and to stimulate early cellular responses) is not recognized as evidence of carcinogenicity of these substances but rather as an indication of their role as cofactors in carcinogensis, particulate materials require careful but separate consideration as a potential hazard (*89, 90*).

d) The induction of a neoplastic response by a substance because of its radioactivity is recognized as a cancer hazard.

Other factors are sometimes suggested to be sufficient to refute the presumption of positive evidence of a carcinogenic effect. These factors must be critically examined to avoid false-negative judgments based on unsubstantiated hypothetical explanations of the circumstances of tumor induction. The following factors are considered in this respect:

a) Indirect mechanisms of action requiring special exposure levels or conditions. An example has been suggested in the case of substances that may induce bladder neoplasms only in the presence of bladder stones resulting from high levels of intake and urinary excretion of the test substance (*91*). Support for such a mechanism as an explanation for development of bladder tumors is provided by determination of a specific association of tumors with stones, a dose-response correlation between stones and tumors, and the absence of other chemical or biological indications that the substance might be carcinogenic by other mechanisms. In evaluation of the relevance of such experimental observations to the assessment of human hazard, special consideration is needed for mechanisms by which exposures or intercurrent diseases in the human may act as the cofactor (e.g., in bladder stone induction), thus producing a susceptible state for the possible carcinogenic activity of the test substance.

b) The action of promoting agents only on tissues previously initiated by carcinogens (*51, 52*). Few examples are well documented, such as the phorbol esters in epidermal carcinogenesis in mice. Criteria of risk evaluation need to be defined and dose-response relationships considered: Any claim that a substance acts only by this mechanism and thus is of less concern to humans needs to be supported by experiments showing the mechanism of action and demonstrating that the effect does not occur at human exposure levels.

c) Metabolic pathways of carcinogen activation (*92*) which are suggested as occurring exclusively under certain test conditions in experimental animals but not under other test conditions or in other species. This situation would be important if thorough studies demonstrate that the metabolic pathways for carcinogenic activation of a substance in animals do not occur in humans. Another important situation would be the demonstration that the metabolic pathways of activation of a particular carcinogen identified by studies at high levels of exposure are exclusively formed at such high levels but are absent at lower dose levels.

Statistical Analysis of Results

Statistical hypothesis testing provides an estimate of the likelihood that an experimental observation may or may not be a result of chance alone. The 95% confidence level is widely accepted as a reasonable assurance that the observed effect is real, but confidence that an increased incidence of tumors is a true indication of the carcinogenicity of a substance increases with increasing statistical significance of the results. Thus the level of statistical significance should be reported rather than the fact that a result is statistically significant or not significant at a single preassigned level of confidence. Failure to detect an increase of tumors in a bioassay may be due to an insufficient number of animals tested and does not unequivocally prove that a substance does not pose a risk of cancer.

Tumors rarely seen in experimental animals may raise considerable suspicion even if the statistical significance is well below the 95% confidence level.

Because of the frequent use in chronic studies of both sexes, more than one species or strain, and more than one dosage level, and because many different tissues are examined, a large

number of statistical comparisons are possible between control and treated animals. Thus the results from a chronic study must be interpreted cautiously to control the rate of false positives arising from the large number of possible statistical comparisons (*93*).

Lifetime animal experiments are often difficult to interpret because of competing causes of death, which may alter the pattern of the observation period of the tumor type under study. A common but inadequate form of presenting tumor data is a report only of the proportion of animals in which particular tumor types were observed during the study. This proportion may contain a mixture of three types of observations: 1) The tumor causes the death of an animal and is subsequently observed upon necropsy; 2) an animal dies due to some cause other than a particular tumor and the tumor is observed upon necropsy; or 3) the tumor is observed when an animal is necropsied at the time of a scheduled sacrifice, generally at the termination of an experiment. Simply combining tumors observed under these three situations makes interpretation difficult, and in fact the data may be misleading if the mortality pattern is altered by the toxicity of the substance.

Serial or terminal sacrifices provide an opportunity to compare the prevalence of tumors in various groups of animals unperturbed by mortality. However, sacrifice data do not provide an opportunity to study the effect of a substance on survival or on causes of death.

The analysis of a bioassay is limited by the quantity and quality of data. Such studies must include the age of each animal at the beginning of the experiment, its age at time of removal from the experiment, reason for removal (death, moribund condition, scheduled sacrifice, or others), and all clinical and pathologic observations, including gross and microscopic examination.

When survival curves of control and treated animals differ due to competing causes of death, adjustment of the number of animals at risk may be necessary. For a tumor type generally leading to the death of an animal, statistical analyses of survival experiments should incorporate life-table or competing risk techniques in order to estimate and test tumor incidence. This approach requires assumptions concerning the independence of the competing causes of death. If all the animals are utilized from a survival study, including sacrificed animals, the net probability of death due to a tumor type can be estimated as though that were the only cause of death of a group of animals. Statistical tests for differences between control and treated groups can be performed on the adjusted tumor incidence rates (*94–96*).

For a tumor type that is unlikely to kill the animals, methods of analysis based on life-table techniques are not appropriate for adjusting the number of animals at risk. These tumors are observed conditionally as a result of other events occurring first: death of the animal or a scheduled sacrifice. To estimate the prevalence rate of these tumors, mortality is assumed to be unrelated to the presence of the tumor. Statistical methods for the analysis of tumors that are not generally life-threatening are discussed by Hoel and Walburg (*94*) and Peto (*95*).

SHORT-TERM TESTS FOR CARCINOGENS

Carcinogenesis tests have traditionally been based on the experimental induction of tumors in laboratory animals. Such tests usually involve the observation of treated animals for most of their life-spans.

Recently, short-term methods have been developed to provide more rapid markers for the tentative identification of carcinogenic effects. These methods are directed toward the study of mechanisms underlying neoplastic transformation as well as toward provision of reproducible and rapid methods for testing chemicals and physical agents for potential carcinogenic activity. The use of short-term methods for the evaluation of carcinogens was the subject of a recent review (*97*) from which the following discussion is largely derived.

Methods Based on Genetic Alterations

The analysis of mutagenic effects has been developed mainly to assess the ability of a substance to induce genetic alterations. The resulting information can be used for estimating the genetic hazard of chemical agents for man.

Because of the similarities of basic molecular mechanisms by which chemical mutagens and most chemical carcinogens appear to induce genetic effects (i.e., molecular alterations of DNA), it has been postulated that mutagenic effects can be used to predict carcinogenicity.

The use of a battery of short-term genetic tests is usually recommended in order to minimize false-negative and false-positive results and to select compounds that require further long-term investigations. This battery of tests may include:

a) tests for mutations in bacteria and eukaryotic microorganisms;

b) tests for mutations in somatic mammalian cells;

c) tests for effects on chromosomes in higher eukaryotes, including mammals;

d) evaluation of DNA repair synthesis.

For screening purposes, preference has usually been given to tests that have already been validated with a large sample of compounds belonging to different chemical groups.

Among the mutagenicity tests on microorganisms, the one most widely used and validated is the Ames reversion test in *Salmonella*. Tests in *Escherichia coli, Saccharomyces. Neurospora,* and *Aspergillus* are also being used. Mutagenicity testing is also being conducted in *Drosophila*.

Several other methods currently being evaluated may be used to monitor genetic damage in mammalian cells by carcinogens in vivo and in vitro. These methods include the production of sister chromatid exchanges as well as measurement of the induction of direct damage to DNA and its subsequent repair.

Various short-term mutagenesis tests, some of which are used to provide supportive evidence of carcinogenicity, are discussed in (*98*).

Methods Based on Neoplastic Cell Transformation

Several systems are now available at the mammalian cell level for the identification and study of substances that represent a possible cancer hazard (*99*).

In recent years a number of systems have been developed to test for neoplastic cell transformation by chemical and physical carcinogenic agents. Some of these systems are being used in several laboratories with good reproducibility; other systems are still being developed. Those that have been most widely studied are *a*) the golden hamster embryo cell system and *b*) the mouse embryo fibroblast cell line systems.

In the golden hamster embryo cell system, primary and/or secondary cultures of normal embryo cells are used. Transformation is determined 7–10 days after treatment of cells seeded for colony formation. Quantitation is based on the frequency of morphologically altered colonies.

In the mouse embyo fibroblast systems, established homogeneous cell lines are used. Thus cloned populations of cells can be grown in large quantities and used by many laboratories. Transformants are identifiable 4–6

weeks after exposure to the carcinogen. They may be scored quantitatively by morphologic criteria (focus assay), which correlate highly with tumorigenicity in animals. Among these established lines, the C3H 10T½ Clone 8 cell system has been the most widely studied.

In these tests for neoplastic transformation, the cells derived from transformed colonies or foci, when inoculated into syngeneic or immunosuppressed animals, can grow as malignant tumors. Although the definitive evidence for neoplastic transformation of cells in culture remains their tumorigenicity in animals, a number of phenotypic changes of the cultured target cells are commonly used as indicators.

Other in vitro systems are being developed with the use of specialized cell types such as epithelial cells from liver, epidermis, and other organs. Neoplastic transformation of well-defined epithelial cells by chemicals has been achieved in vitro; conditions for quantitative studies are under development. Such systems may be needed to identify critical target cell populations within target tissues closely correlated with carcinogenesis in vivo.

To be effective, most chemical carcinogens require metabolic activation by cell enzymes to an ultimate reactive metabolite. In mammals metabolic activation of carcinogens takes place in many organs and tissues. Cells in culture can retain enzyme activities, but specific culture systems or preparations may lack or lose the enzyme activity necessary to activate certain chemicals. Therefore, adequate consideration should be given to the effectiveness of metabolic activation functions in each test system used.

Evaluation of Short-Term Test Results

The study of carcinogenesis at the cell level presently offers an effective means to identify carcinogenic effects and mechanisms. In vitro mammalian cell transformation systems are simple models for the study of the mechanisms of chemical and physical carcinogenesis.

As these systems become more widely used as test methods, they will lead not only to better development and definition of screening techniques but also to better understanding of the underlying mechanisms of carcinogenesis.

Short-term tests for chemical carcinogens presently do not, in the absence of animal bioassays and epidemiology data, constitute definitive evidence that a substance does (or does not) pose a carcinogenic hazard to humans. However, positive responses in these tests are considered suggestive evidence of a carcinogenic hazard.

Such positive results also supply supporting evidence to positive animal bioassays or epidemiology results. In some instances results from short-term tests may conflict with animal bioassay data. If an animal bioassay shows a positive response, it cannot be dismissed because a negative response was observed in these tests. However, positive responses in such short-term tests are ordinarily sufficient to provide suggestive evidence of carcinogenicity, even if the substance tested has shown only negative responses in some animal bioassays. As the degree of certainty attached to the negative responses in animal bioassays increases because the observation is reproduced in other animal species and strains or under more rigorous test conditions, the suspicion about the chemical as a result of short-term tests may be reduced and eventually eliminated. These conclusions are in accord with those of the National Cancer Advisory Board's Subcommittee on Environmental Carcinogenesis (*57*):

> At the present, none of the short-term tests can be used to establish whether a compound will or will not be carcinogenic in humans or experimental animals. Positive results obtained in these systems suggest extensive testing of the agent in long-term animal bioassays, particularly if there are other reasons for testing. Negative results in a short-term test, however, do not establish the safety of the agent.

MOLECULAR STRUCTURE AS SUPPORTING EVIDENCE IN IDENTIFICATION OF CARCINOGENS

Information useful in identifying possible carcinogens is provided by their molecular structures. It is well established that certain groupings of atoms (functional groups) in some molecules may impart carcinogenic properties—e.g., some polynuclear aromatic systems, hydrazine groups, N-nitroso groups, and α,β-unsaturated lactones. There is a moderately substantial base of empirical data that permits conclusions about carcinogenic potential on the basis of molecular structure (*33, 100*).

Similarly, some functional groups have never been shown to impart carcinogenic properties to molecules, although the data base for such negative correlations is much smaller and probably inconsequential. The reason for the absence of a strong empirical data base for noncarcinogens is that structure has frequently been used as a guide to testing chemicals for carcinogenicity, and priorities for testing have often been based on the suspected cancer-inducing properties of chemicals.

In some instances, the predictive power of molecular structure of functional groups known to be correlated with carcinogenic properties has proved unsatisfactory. Therefore, the general consensus of the scientific community appears to be that chemical structure has limited value in identifying carcinogens and is to be used in carcinogenesis hazard assessment only as corroborative supporting evidence.

In the absence of other data, however, there are instances in which structure may provide suggestive evidence that a risk of carcinogenesis exists. When strucure is to be used as suggestive evidence, well-documented support should be presented and qualified where necessary by complete notation of substances of similar structure that have been adequately studied for carcinogenic activity.

QUALITATIVE JUDGMENTAL FACTORS IN EVALUATION OF TOTAL EVIDENCE

Evidence that a substance poses a carcinogenic hazard is contributed by each source discussed in the preceding sections of this report: epidemiologic studies, studies on experimental animals, and studies based on short-term and other tests that have been shown to correlate with carcinogenicity; this includes studies of biochemical pathways and chemical structure. For some substances data may be available from all three sources; for others, there may be data from only one or two sources. Each source of relevant data needs to be critically evaluated by consideration of the many aspects discussed in this document.

The judgment that a substance poses a carcinogenic hazard derives from the evaluation of the total evidence provided by all of the sources. Different data sources may not contribute equally to the cumulative evaluation, depending on the specific nature and extent of the data, the scientific quality of the studies, and the adequacy of their documentation.

Conclusions on the carcinogenicity of a substance may be reached on the basis of evidence provided by epidemiologic studies, bioassays in animals, or both. Suggestive evidence is provided by the other types of studies.

In the absence of adequate epidemiologic or animal evidence, a positive response in any of the short-term in-vitro tests that correlate with carcinogenicity is considered suggestive of a carcinogenic hazard. Suggestive evidence may also derive from

considerations of chemical structure or biochemical pathways.

Ordinarily, if a substance has produced positive results in a single adequately designed and conducted animal bioassay and no other data are available, the conclusion is that the substance is likely to pose a risk of cancer to humans. These results may be further confirmed by data on chemical structure, in vitro testing, or relevant biochemical studies that suggest a carcinogenic potential. However, negative data from the latter three sources do not override adequate positive data from an animal bioassay. Further confirmation that the substance poses a carcinogenic hazard to humans is obtained from bioassay data showing reproducibility of results, positive dose-response relationships, and concordance of results (*see* "Evaluation of Pathologic Results").

Because of biologic variability among species, the conclusion that the evidence is positive on the basis of results obtained in one animal species is not altered by negative data obtained in other species or strains of test animals. Moreover, negative epidemiologic data, questionable because of limitations in the power of detection of such studies, do not deny the conclusion of carcinogenicity on the basis of animal bioassays. Negative evidence from properly designed and conducted epidemiologic studies may, however, be used to set an upper limit on human risk to comparable populations under analogous conditions of exposure.

It should be stressed that the qualitative judgment whether a substance poses a carcinogenic hazard is based on the evaluation of cumulative evidence from all pertinent data sources. The reasons for specific conclusions need to be clearly detailed.

The terms "strong" and "weak" have been used in the literature to describe both the nature of the hazard or risk and the exent and quality of the evidence. A certain confusion may have ensued, since one could refer to weak evidence of a strong effect or to strong evidence of a weak effect. The two categories are clearly not equivalent and should not be confused.

PART III. THE QUANTITATIVE ESTIMATION OF RISK

The previous section of this document dealt with the issue of the likelihood that a substance poses a carcinogenic hazard to humans. In some instances a regulatory agency may be required, or may find it useful, to estimate quantitatively the cancer risk of such a substance in exposed humans if the compound is assumed to be a human carcinogen.

Quantitative assessment of human cancer risk may be based on epidemiologic or animal data. In either instance, methodologic problems arise because of the need to extrapolate from effects observed under one condition and level of exposure and in one population group or biologic system to arrive at an estimate of the effects expected in the human group or individual. Because extrapolations are involved, uncertainties are necessarily attached to the cancer risk estimates that can be made with current methodologies. Furthermore, uncertainties arise from other sources, particularly from attempts to identify accurately conditions and levels of exposure of the human group or individual.

Despite the uncertainties, risk estimates can be and are being made, not only by some regulatory agencies but by other scientific bodies. Because of the uncertainties, however, and because of the serious public health consequences if the estimated risk were understated, it has become common practice to make cautious and prudent assumptions wherever they are needed to conduct a risk assessment. This approach has a precedent in other areas of public health protection where similar problems arise because of gaps in knowledge (*101, 102*). Thus current methodologies, which permit only crude estimates of human risk, are designed to avoid understatement of the risk. It must be recognized, however, that in some circumstances this cannot be guaranteed because of other factors that may enhance human response, such as synergistic effects. Thus risk assessments should be used with caution in the regulatory process.

If data on animals are used as the basis for estimating human risk, data obtained from the most sensitive animal species or strain tested are commonly recommended as the starting point for extrapolation. Of the available data, these are clearly the least likely to understate human risk. Use of data from less sensitive species or strains is justifiable only if there are strong reasons to believe that the most sensitive animal model is completely irrelevant to any segment of the exposed human population.

A limited comparison of human and animal data for carcinogens is contained in a report of the National Academy of Sciences (*103*). Data were compared for benzidine, chlornaphazine, diethylstilbestrol, aflatoxin B_1, vinyl chloride, and cigarette smoke. The authors stated that "* * * as a working hypothesis, in the absence of countervailing evidence for the specific agent in question, it appears reasonable to assume that the lifetime cancer incidence induced by chronic exposure in man can be approximated by the lifetime incidence induced by similar exposure in laboratory animals at the same total dose per body weight." These preliminary observations suggest that current methodologies may not lead to serious errors.

Whether quantitative risk assessment is based on data from animals or humans, there is uncertainty about the shape of the dose-response relationship at the (usually low) levels of actual human exposure. Mathematical extrapolation models are discussed in detail later in this section. The linear nonthreshold dose-response model is most commonly used at the present time. Of the various models, it appears to have the soundest scientific basis and is less likely to understate risk than other plausible models. It has, for many of the same reasons, a long history of use in protection against radiation (*101, 102*).

The most favorable foundation for quantitative risk assessment is based on well-characterized responses in human populations with well-defined exposures. Unfortunately, the exposure estimates are often unavailable or crude. Negative epidemiologic studies on populations for which usable exposure estimates are available can be valuable in conjunction with animal data; the studies on animals provide evidence for carcinogenic hazard, and the epidemiologic data may provide upper limits of response for cross-comparison with the animal data. Although extrapolation from the observed human population group to other groups carries less uncertainty than extrapolations from animals to humans, the possibility of significant differences in the characteristics and conditions of exposure of the two population groups must be recognized. Any such differences that may affect the estimate of risk should be noted, although information is rarely available that will permit specific integration of these factors into the risk assessment methodology.

To the extent currently possible, the methods described in the following section permit a crude order-of-magnitude estimate of risk for substances that may pose a cancer hazard to humans. As more knowledge develops, risk assessment methodologies should be improved. Some of the kinds of information and

knowledge that will likely prove useful in the future are discussed in the sections to follow. At present, most such information is not available and thus cannot ordinarily be used in risk assessment without the imposition of numerous assumptions. Caution is needed in risk assessment as long as these gaps in knowledge exist.

Much has been written about threshold doses for carcinogenic effect, but unfortunately, there is no recognized method for determining their existence. A model recently proposed by Cornfield (*104*) permits the inclusion of thresholds. However, as Cornfield stipulated originally and again recently (*105*), a threshold could be derived from this model only if there were instantaneous and complete deactivation of the material before any carcinogenic effect occurs—an improbable event.

Since threshold doses for carcinogenesis have not been established, a prudent approach from a safety standpoint is to assume that any dose may induce or promote carcinogenesis. Some of the mathematical models proposed to describe the dose-response relationship for carcinogenesis are discussed in the following section.

With the present state of knowledge, the quantitative assessment of cancer risks provides only a rough estimate of the magnitude of the cancer risks; this estimate may be useful in setting priorities for control of carcinogens and in obtaining a very rough idea of the magnitude of the public health problem posed by a given carcinogen.

MATHEMATICAL MODELS FOR HIGH-TO-LOW DOSE EXTRAPOLATION WITHIN A SINGLE BIOLOGIC SYSTEM

Mathematical models were developed in the last two decades for estimating the effects of exposure levels well below levels for which test data were available, with the goal of ensuring that the risk will not be underestimated. These models of dose-response relationships make use of data obtained in a given biologic system to extrapolate from high to low doses. Consideration must be given to the many biologic variables that influence the level of response in different species or under different exposure conditions.

The Models

In order to extrapolate outside the experimental range of exposure levels, some mathematical formulation relating response to dose must be available. The two categories of mathematical models commonly used to depict the relationship between response and dose are dichotomous-response models and time-to-response models. In the dichotomous-response situation the response of interest is the presence or absence of some specified condition. Time-to-response models attempt to relate dose level to distribution of the time until the occurrence of a given event, such as tumor observation or death. (Both categories of models are completely specified except for a few unknown parameters, which are typically estimated from a given set of experimental data.)

A variety of different approaches have been proposed to deal with the problem of low-dose extrapolation involving a dichotomous response. Included are the Mantel-Bryan procedure, the one-hit model, linear extrapolation, and various extensions of the multistage model developed by Armitage and Doll (*106*).

Mantel and Bryan (*107, 108*) proposed an extrapolation technique based on the log-probit model, which had long been used for bioassays to estimate median lethal doses. They selected this model because it seemed to provide a reasonable fit to a large body of experimental carcinogenesis data and not because of any mechanistic arguments in its support. Under this procedure, extrapolation is conducted from the upper confidence limit on the observed experimental response along a probit log-dose line with a preassigned slope of one to some specified low level of risk. By using the upper confidence limit and fixing the slope at one (a shallower slope than they had typically seen with their experimental data sets), Mantel and Bryan hoped to generate an upper bound on the estimated dose associated with the predeterminated risk level, regardless of the true form of the underlying and unknown dose-response curve. However, subsequent theoretical and applied research has demonstrated that the Mantel-Bryan procedure is not as conservative as once thought and may underestimate risk in some situations (*109, 110*).

The one-hit model is based on the concept that a tumor can be induced after a single susceptible target or receptor has been exposed to a single effective dose unit of a substance (*109, 110*). Thus, unlike the Mantel-Bryan procedure, there is an assumed biologic mechanism of action for the carcinogen underlying the one-hit model. This action implies that the probability (P) that a tumor will be induced by exposure to a chemical at dose d is given by the equation $P(d)=1-\exp(-\lambda d)$, where λ is an unknown non-negative constant. When λd is small (i.e., in the low-dose region), it can readily be shown that $P(d)\approx\lambda d$, i.e., for low dose levels the one-hit model is well approximated by a simple linear model in which the probability of tumor observation is directly proportional to dose.

If the unknown (true) dose-reponse curve is assumed to have a sigmoidal shape—an assumption supported by a wealth of toxicologic data—then the response will curve upward in the low (or, typically, environmental) dose region. Thus a linear model will provide an upper bound to curves of this shape and, it is hoped, a conservative estimate of the dose associated with any specified level of risk (*111*). A line connecting zero with a point on the dose-response curve for the excess tumor rate above background will always lie above the true dose-response curve for the convex portion of the curve. An additional degree of conservatism is introduced by extrapolating back to zero from an upper confidence limit (UCL) for the net excess tumor rate above the background rate. In the linear model the tumor rate is assumed to be proportional to dose: $P(d)=\lambda d$. The upper confidence limit for the slope λ is UCL÷experimental dose. Thus the maximal risk for a given dose d may be estimated by the equation maximal risk$=(\mathrm{UCL}/d_e)\times d$, where d_e is the experimental dose. Conversely, the equation for a predicted dose for a maximal level of risk is: predicted dose$=(\mathrm{risk}\times d_e)/\mathrm{UCL}$.

A number of investigators have published papers (*112–115*) based on the Armitage and Doll (*116*) formulation of the multistage model of carcinogensis. Under the multistage model it is assumed that the cancer originates as a "malignant" cell, which is initiated by a series of somatic-like mutations occurring in finite steps. It is also assumed that each mutational stage can be depicted as a Poisson process in which the transition rate is approximately linear in dose rate. Then the lifetime probability of tumor induction can be expressed approximately as $P(d)=1-\exp(-\lambda_0-\lambda_1 d-\ldots-\lambda_k d^k)$, where $\lambda_i\geq 0$ for all values of i, and k corresponds to the number of transitions or mutational stages. (Highly sophisticated computer algorithms have been developed for fitting the multistage model to laboratory data with the use of a restricted maximum likelihood approach which does not require that the value of k be pre-specified.)

Both the total incidence of tumors and the time at which tumors occur are important. Tumors leading to early

death and life-shortening need to be considered.

Time-to-tumor is the time at which a tumor is detected or observed by palpation or by gross or microscope examination of an animal at the time of death or sacrifice. Time-to-tumor is not used here to indicate the instant at which a pretumorous condition becomes a tumor. Time-to-observance is better terminology.

Some hope for improving risk estimates has been based on use of the time-to-observance of tumors in addition to use of the proportion of animals possessing tumors. On the basis of Druckrey's work (*117*), the median time to tumors appeared to increase as the dose decreased. It was hoped that low doses could be found that would result in median times-to-tumor observation well beyond the expected lifetime; this might result in the identification of "practical thresholds." Albert and Altshuler (*118*) expanded on the use of median time-to-tumor observance by employing distributions of time-to-tumors for individual animals. Chand and Hoel (*119*) showed that use of a log-normal time-to-tumor distribution leads to a probit-log dose relationship, and use of a Weibull time-to-tumor distribution leads to an extreme value model for the proportion of animals with tumors: $P(d)=1-\exp[-\exp(\alpha+\beta \log d)]$, where alpha and beta are constants. Schneiderman et al. (*120*) demonstrated that even though the median time-to-tumor may be well beyond the expected lifetime, a significant proportion of animals or humans may still develop tumors within the normal life-span. Peto (*121*) examined human data and questioned the concept that lower doses result in longer latency. Whittemore and Altshuler (*122*), analyzing data on cigarette smoking, concluded that it was not possible to distinguish between the log-normal and the Weibull models.

The available data do not permit a conclusion as to whether lower doses lengthen the latency periods. Animal experiments at high doses may induce more tumors resulting in easier and therefore earlier detection, and this may not be due to an actual decrease of latency period.

Time-to-observance response models have not received the same degree of attention as dichotomous-response models in carcinogenesis risk extrapolation. One of the major factors underlying this relative lack of emphasis may be that studies in which animals were given the substance in their feed have not generated sufficient information to determine the relationship between age and cumulative cancer incidence.

Procedures

In the preceding section it was noted that the Mantel-Bryan procedure is essentially empirical and lacks biologic relevance with respect to current knowledge about carcinogenesis. Since risk extrapolations developed by the Mantel-Bryan technique tend to zero much more rapidly in the low-dose region than do extrapolations based on somatic mutation models, the Mantel-Bryan procedure would certainly not be appropriate if the carcinogen under study were thought to act directly on cellular DNA (*109*).

Initially, extrapolation based on a multistage model appears to offer significant advantages over linear extrapolation procedures. Under the multistage approach, no assumptions are made a priori about the exact form for the mathematical extrapolation. Instead, the experimental data are used to estimate the shape of the dose-response curve. However, Crump et al. (*109, 114*) and Guess et al. (*110*) have shown that the upper confidence limit on estimated risk becomes essentially linear for generalized polynomial extrapolation in the low-dose region. This approximate linearity holds even when the maximum likelihood estimate of excess risk does not contain a linear component (estimated). Therefore, there is some question whether the mathematical refinements of generalized polynomial extrapolation are justified for application to animal bioassays, which may be only crude approximations to the human situation (*109*).

As an interim procedure, it has generally been recommended (*106*) that whenever quantitative risk analysis is deemed necessary, *linear extrapolation should always be included* among any methods used unless there is reason to believe that the experimental (observed) response does not fall in the convex portion of the dose-response curve. If the response is in the concave portion of the curve, the one-hit model is suitable. At low observed responses the linear and one-hit models yield nearly identical results. An added degree of protection can be achieved by starting the extrapolation from the upper confidence limit of the response.

The mathematical procedures per se are intended to provide upper limit estimates of risk from a statistical standpoint. However, the risk estimates as applied to humans should not be regarded as upper limit estimates because of large biologic uncertainties (*see* "Extrapolation From Observed Effects to Estimates of Risk for the Observed Population").

CHARACTERIZATION OF POPULATION EXPOSURE

The estimation of total population exposure to a given substance (and/or to its decomposition and metabolic products) requires consideration of the following aspects:

a) sources of human exposure (occurrence, production, uses, and environmental distribution);

b) analytical methods for detecting and measuring exposures in the environment and in the population;

c) routes and conditions of exposure;

d) duration, frequency, and intensity of exposure; and

e) size and characteristics of the exposed populations.

During examination of exposure data, important qualitative and quantitative factors beyond definable numerical values of dose level and population size will emerge; although such information may not be usable directly in a mathematical calculation of risk estimate, it will frequently provide additional perspective and insight during risk evaluation. Because of the great diversity in sources and estimating procedures available in various situations, it does not seem practicable at this point to set minimum detailed specifications for the reliable estimation of exposures or to identify recommended or approved methods and procedures for producing exposure estimates. The following general considerations indicate the kind of data useful for assessment of population exposures. The better defined these data are, the higher will be the confidence that a realistic estimate of risk for the exposed populations has been made (*123*).

Sources of Human Exposure

Two types of exposure sources are considered: primary sources and human contact sources.

Primary sources of exposure to a chemical are those that determine its release into the human environment, and they include natural occurrence, extraction from natural products, mining, chemical synthesis, manufacturer or production, and specific uses.

Human contact sources are those that bring about the contact of the substance with the human body, and they include items, or preparations containing the chemical (such as foodstuffs or consumer products), vehicles, or a medium in which the chemical is present (such as ambient air or drinking water).

Some substances may originate from a single primary source and be present in a wide range of human contact sources; conversely, a specific human contact source may be traced to several

different primary sources. It is important that for each substance the entire range of sources and environmental distribution be examined.

Frequently, there is more than one source of human exposure, and an individual may be exposed to a substance of concern from an array of sources depending upon the circumstances. Analysis of environmental distribution and exposure pathways allows idenification of the most significant sources, so that both the size of the population exposed and the intensity of exposure can be established.

In some instances, it is possible to estimate combined exposures to the same substance from different sources, primarily where the populations affected by these different sources are the same. Frequently, however, differences in the populations exposed from various sources are so large that any attempt to combine the estimates may produce an unrealistic or unclear description of the acutal human exposure conditions. Then it is preferable to consider each source separately and subsequently use whatever knowledge is available on multiple sources of exposures to interpret these observations.

Estimates of the total level of production of a substance can be useful indicators of the extent of exposure, particularly over time. Dates of first synthesis and commercial production of a substance are useful in the evaluation of delayed toxic effects and allow an estimate of the time before which no human exposure could have occurred. The accuracy of data on national production and foreign trade of individual substances (which are often difficult to obtain) needs to be ascertained.

Uses of a substance are important descriptors of its environmental distribution and the extent of human exposure. Whenever possible, all uses of carcinogenic substances should be identified.

An important distinction is that between uses for which human exposure is intended (intentional exposures) and that for which it is not intended (unintentional exposures). Individual exposure or consumption of a substance may be voluntary or involuntary. The sociologic bases and implications of these definitions are beyond the scope of this report.

Analytical Methods for Detection and Measurement of Exposures

The specificity and limit of detection of analytical procedures for the identification of many carcinogenic substances, both in the environment and in exposed organisms, have been remarkably improved in recent years. Progress in analytical chemistry is expected to undergo further refinement and improvement in the near future.

The limit of detection of analytical methods varies considerably for different substances and different conditions of analysis, and this is a critical factor in assessing a source of exposure. It is important to consider that the agent may not be measurable but may still be present below the minimum detectable level. The minimum detectable level of a substance may vary depending on different vehicles, media, and conditions of exposure.

Quantitative determinations of the level of a substance in various exposure sources should consider time and space distribution and variations, and ranges of values may be useful to estimate the conditions of exposure.

The chemical and physical properties of the substance should be identified. Such characteristics as particle size distribution for aerosols and dust should be determined insofar as possible.

Analytical determination of the levels of a substance in exposed organisms, particularly in the exposed population, is of great value but not always obtainable. Available data on the levels of substance (or its metabolites) in the target tissues or body fluids should be considered.

The dose of an ultimate carcinogen at the site of action in the tissues or cells, which is measured at all times after its introduction ("target tissue dose") is ideally the dose that should be estimated and correlated with expected effects. This target tissue dose usually cannot be closely estimated because of many variables and uncertainties (*102*). The relationship between target tissue dose and exposure dose may vary considerably under different conditions. To the extent practicable, documentation of the analytical methods, the sampling conditions, the limits of detectability, and the range of observed values is desirable.

Routes and Conditions of Exposure

All possible routes of exposures associated with each source should be identified. If any routes of exposure are considered irrelevant for estimation of effective doses, the circumstances should be specified. Careful consideration of sources of exposure—e.g., product use patterns, environmental or occupational situations, and background—may suggest or reveal routes of exposure not immediately apparent. For example, a chemical may also be absorbed through the skin or by ingestion when inhalation is apparently the primary route.

For estimation of animal-to-human correlations in the evaluation of test data on animals, it is necessary to obtain the human dose level in units consistent with those used to describe the effective dose in the animal bioassay being used for comparison. In some instances, any necessary conversion from the actual measurement at the source to the needed units describing exposure dose can be straightforward (e.g., by simple application of observed or estimated food ingestion rates to a chemical's concentration in a food). In other instances, complex calculations or modeling procedures may be necessary, as in the estimation of effective exposure distributions from ambient air on the basis of monitoring data or emission inventories for point sources. This conversion or translation step, often necessary in the estimation of human exposure, should always be explicity identified and reported. When available data show substantial differences between the route and conditions of exposure in test animals and in humans, it is necessary to rely on estimates of comparability and to attempt to establish an acceptable equivalent dose. In the absence of satisfactory equivalent dose data, only defensible conservative assumptions should be used in such a way that the possible risk is not underestimated.

Duration, Frequency, and Intensity of Exposure

An important factor in the quantitative evaluation of population exposure is the length of time during which exposures occur. Although the time of exposure may vary considerably within a population, there are cases when it can be reasonably well-defined. These include cases of specified duration of exposure (e.g., to certain drugs or certain occupational carcinogens) or continuous lifetime exposure to widely disseminated environmental carcinogens (e.g., polycyclic aromatic hydrocarbons).

Effective exposure rates corresponding to typical patterns of individual exposure, whether short-term or long-term temporal trends, must be reported wherever significantly different patterns exist. The two components of the estimated level or amount of exposure—the effective rate per unit time or per incident of exposure and the frequency-duration pattern—should be explicity identified for each exposure pattern considered.

Size and Characteristics of Exposed Populations

The total number of people exposed to any level of a carcinogenic substance represents a major indicator of the extent of risk related to that substance. Because combinations of exposures to different carcinogens may contribute to the cancer risk in the same population or individual, and because no threshold level for exposure to a carcinogen can presently be reliably determined for a population, a contributory risk level from any exposure level, however small, must be assumed.

Age of exposure should be considered, i.e., whether exposure is essentially lifelong (at more or less constant rates) or is concentrated in certain age ranges. The relationship between total lifetime exposure in each exposure pattern and the amount of this exposure that may be concentrated in any specific age ranges should be identified. Wherever feasible, the degree of stratification of exposed populations should be identified to permit distinctions between effective exposure amounts by age (e.g., childhood, working age, and elderly age groups) and by sex. As noted above, populations having high-risk age groups should be identified. Attention should be given to exceptional exposure groups of special concern, such as infants, children, and pregnant women, as well as to groups with special genetic conditions or concurrent disease. In addition, in descriptions of certain population subgroups, the smoking habits, dietary and alcohol consumption patterns, and other cultural and environmental characteristics should be considered if possible.

EXTRAPOLATION FROM OBSERVED EFFECTS TO ESTIMATES OF RISKS FOR EXPOSED POPULATION

The quantitative estimation of risk from a carcinogenic substance for the entire exposed or potentially exposed population may be conducted with the use of observations on the effects of the substance in 1) a defined human population group and 2) experimental animal tests.

In both situations the extrapolation will take into account the factors that characterize and distinguish the groups observed and the factors to which the extrapolation applies.

Correlations From Observed Human Population Groups to Others

The problem to be considered here is the estimation of present or potential risks for all people exposed to a given substance by means of data obtained from observations in a defined population group. The observed group may be small and its exposure conditions may be well defined, as for certain studies of drugs or for occupational exposures. In other situations the observed group may be poorly defined, even if larger. In analyzing the correlation between observed and estimated population effects, it is desirable where feasible to review the critical differences between the two conditions, such as age and sex distribution of the population; genetic, racial, and ethnic differences; environmental differences and migration patterns; dietary and cultural habits; smoking patterns; alcohol consumption; patterns of intercurrent disease; and particular susceptibility states including pregnancy and fetal and neonatal exposures. Many of these complex variables are considered under "Epidemiologic Evidence" in Part II and "Characterization of Population Exposure" in Part III.

Animal-to-Human Correlations

Although a close qualitative similarity has been established in the nature of the response of laboratory animals and humans to carcinogenic substances, a quantitative correlation is more uncertain because of the marked variation of susceptibility in different animal species and among individuals in the human population. It is not possible to reduce the variables to a single safety factor for general use (*106*).

Several species-conversion factors should be considered in estimating risk levels for humans from data obtained in another species. Species–conversion factors are affected by many variables, such as body surface, body weight, metabolic pathways, nutritional conditions, genetic variability, and bacterial flora as well as tissue distribution and the retention and fate of the chemical. In evaluating exposures to the general population, one should consider all ages, transplacental exposures, concurrent disease conditions, and special susceptibility states.

Other conversion factors should also be considered when observations are obtained for test species under exposure conditions markedly different from those in the population (e.g., different routes or modes of exposures, vehicles, modifying factors, variations in age, sex, perinatal exposures, disease states, and single vs. multiple exposures). The limits of uncertainty should be stated whenever possible (*102, 106*).

Different carcinogens tested under comparable experimental conditions show a wide range of response; if extreme cases are included, the range of variation is more than one millionfold. Changes in experimental conditions, particularly ones that alter the effective dose, can markedly affect the observed level of effect of a carcinogen within the same genetic strain of animal. Exposure of experimental animals to certain other chemicals in addition to a carcinogen under test may change the observed effect in either direction and at the extremes up to one hundredfold or even one thousandfold (*124*). Differences between species can be even greater. On the other side of the correlation, the human response to carcinogens as well as to many other chemicals and drugs may also show great quantitative variations among individuals. Studies on the metabolic activation and chemical interaction of carcinogens in human tissues in vitro have shown interindividual quantitative variations of about one hundredfold in relatively small population samples (*125–127*). Individuals resistant or sensitive to one carcinogen may not be equally resistant or sensitive to another carcinogen or to combined effects of several exposures. Such wide interindividual variations are also well known from many pharmacokinetic studies.

A number of variables are relevant to the correlation of animal and human conditions. Some problems inherent in the use of animals must be kept in mind when animal studies are used for estimation of the quantitative carcinogenic potential of a substance for humans. A concise statement of some of these factors is contained in "Drinking Water and Health," prepared by the Safe Drinking Water Committee, Advisory Center on Toxicology, National Research Council, National Academy of Sciences (*56*). Factors discussed in this document include the rate of chemical absorption, distribution within the body, metabolic differences among exposed animals, effect of intestinal bacteria, rates of excretion and reabsorption, differences in molecular receptor sites for the carcinogen, environmental and genetic differences, and number of exposed animals and susceptible cells.

Metabolism and pharmacokinetics account for major differences in sensitivity to chemical carcinogens between species. In principle, this information could be used in estimating the relative sensitivity of humans compared to experimental animals. In practice, detailed metabolic pathways in humans are not known for many carcinogens; moreover, the marked variation in metabolism and sensitivity

among individuals of different ages, states of health, and other biologic conditions require more information on the heterogeneity of human metabolic and pharmacokinetic responses than is usually available. It is hoped that future research will clarify these important correlations in much greater depth. Such information, if available, should be used to correct for an underestimate of human risk, but it should be used to correct for an overestimate of human risk only when there is substantial information on diversity of human response.

The contribution of animal test data to the estimation of the risk level for humans should be based on experiments with the most sensitive species available. Confidence that this procedure will not underestimate the human risk increases with the number of experiments and the number of species and strains studied.

LACK OF PREDICTABLE THRESHOLDS FOR AN EXPOSED POPULATION

The self-replicating nature of cancer, the multiplicity of causative factors to which individuals can be exposed, the additive and possibly synergistic combination of effects, and the wide range of individual susceptibilities work together in making it currently unreliable to predict a threshold below which human population exposure to a carcinogen has no effect on cancer risk.

Observation of the marked individual differences in the response of human subjects to carcinogens shows that some individuals do not develop cancer in their lifetime, whereas others develop it readily after the same exposure to a carcinogen. Although these observations are compatible with the existence of different "thresholds" for individual subjects in certain conditions, they are not a basis for predicting a no-effect level of a carcinogen in other individuals or under different conditions. There is no presently acceptable way to determine reliably a threshold for a carcinogen for an entire population.

Individual human subjects in the population are exposed throughout life to a number of carcinogens, which may be considered to provide a background of carcinogenic risk; exposure to any amount of a single carcinogen, however small, is regarded as capable of adding to the total carcinogenic risk(*109*). Cancer susceptibility varies greatly among individual members of human populations due to genetic, racial, and ethnic factors; to environmental and dietary exposure; and to other modifiers.

Variability among individuals makes it very difficult to have confidence that an observed no-effect level of exposure in animals or even in a specific human population (for which individual variation may be small in comparison to the total population) will be applicable to the total human population at risk. A large number of factors (e.g., age, sex, race, nutritional status, immunologic status, general state of health, previous exposure to the substance in question or to other substances) could affect individual susceptibility. Even if thresholds for carcinogens could be demonstrated for certain individuals or for a defined population, no reliable method is known for establishing a threshold that could apply to the total human population (*67*).

SUMMARY OF RISK ESTIMATION

For a given substance, the usefulness of dose-response data obtained from a specific human population group or from animal tests for estimation of risk in the general population is limited by the consideration that general population exposures to one substance are usually only a component of the total carcinogenic burden derived from multiple sources, with their possible interactions.

Recognition of these limitations, however, does not imply that no attempt should be made to develop reasonable risk estimates for different conditions of human exposure. The several components of quantitative risk assessment include the following:

a) definition and quantification of exposures;

b) characterization of the exposed populations in quantitative terms;

c) chemical and physical properties of the substance and its chemical reactivity in relation to exposure;

d) prudent quantitative mathematical extrapolation of the responses from observed to estimated exposure ranges within the observed biologic system; and

e) qualification of the estimated risk in light of identifiable biologic and toxicologic differences that may be present in the exposed human population.

REFERENCES

(*1*) Saffiotti U: Scientific bases of environmental carcinogenesis and cancer prevention: Developing an interdisciplinary science and facing its ethical implications. J Toxicol Environ Health 2:1435–1447, 1977

(*2*) Hartwell JL: Survey of Compounds Which Have Been Tested for Carcinogenic Activity. Natl Cancer Inst, Public Health Serv Publ No. 149. Washington, D.C.: U.S. Govt Print Off, 1951

(*3*) Shubik P, Hartwell JL: Survey of Compounds Which Have Been Tested for Carcinogenic Activity. Natl Cancer Inst, Public Health Serv Publ No. 149 (suppl 1). Washington, D.C.: U.S. Govt Print Off, 1957

(*4*) Shubik P, Hartwell JL, Peters JA, eds: Survey of Compounds Which Have Been Tested for Carcinogenic Activity. Natl Cancer Inst, Public Health Serv Publ No. 149 (suppl 2). Washington, D.C.: U.S. Govt Print Off, 1969

(*5*) National Cancer Institute: Survey of Compounds Which Have Been Tested for Carcinogenic Activity, 1961–1967 vol. Public Health Serv Publ No. 149. Washington, D.C.: U.S. Govt Print Off, 1973

(*6*) ——: Survey of Compounds Which Have Been Tested for Carcinogenic Activity, 1968–1969 vol. Public Health Serv Publ No. 149. Washington, D.C.: U.S. Govt Print Off, 1971

(*7*) ——: Survey of Compounds Which Have Been Tested for Carcinogenic Activity, 1970–1971 vol. Public Health Serv Publ No. 149. Washington, D.C.: U.S. Govt Print Off, 1974

(*8*) ——: Survey of Compounds Which Have been Tested for Carcinogenic Activity, 1972–1973 vol. Public Health Serv Publ No. 149. Washington, D.C.: U.S. Govt Print Off, 1975

(*9*) International Agency for Research on Cancer: Inorganic substances, chlorinated hydrocarbons, aromatic amines, N-nitroso compounds, natural products, miscellaneous. IARC Monogr Eval Carcinog Risk Chem Man 1:1–184, 1972

(*10*) ——: Some Inorganic and Organometallic Compounds. IARC Monogr Eval Carcinog Risk Chem Man 2:1–181, 1973

(*11*) ——: Certain Polycyclic Aromatic Hydrocarbons and Heterocyclic Compounds. IARC Monogr Eval Carcinog Risk Chem Man 3:1–271, 1973

(*12*) ——: Some Aromatic Amines, Hydrazine and Related Substances, N-Nitroso Compounds and Miscellaneous Alkylating Agents. IARC Monogr Eval Carcinog Risk Chem Man 4:1–286, 1974

(*13*) ——: Some Organochlorine Pesticides. IARC Monogr Eval Carcinog Risk Chem Man 5:1–241, 1974

(*14*) ——: Sex Hormones. IARC Monogr Eval Carcinog Risk Chem Man 6:1–243, 1974

(*15*) ——: Some Anti-thyroid and Related Substances, Nitrofurans and Industrial Chemicals. IARC Monogr Eval Carcinog Risk Chem Man 7:1–326, 1974

(*16*) ——: Some Aromatic Azo Compounds. IARC Monogr Eval Carcinog Risk Chem Man 8:1–357, 1975

(*17*) ——: Some Aziridines, N-, S-, and O-Mustards and Selenium. IARC Monogr Eval Carcinog Risk Chem Man 9:1–268, 1975

(*18*) ——: Some Naturally Occurring Substances. IARC Monogr Eval Carcinog Risk Chem Man 10:1–353, 1976

(*19*) ——: Cadmium, Nickel, Some Epoxides, Miscellaneous Industrial Chemicals, and General Considerations on Volatile Anesthetics. IARC Monogr Eval Carcinog Risk Chem Man 11:1–306, 1976

(*20*) ——: Some Carbamates, Thiocarbamates and Carbazides. IARC Monogr Eval Carcinog Risk Chem Man 12:1–282, 1976

(*21*) ——: Some Miscellaneous Pharmaceutical Substances. IARC Monogr Eval Carcinog Risk Chem Man 13:1–255, 1977

(22) ——: Asbestos. IARC Monogr Eval Carcinog Risk Chem Man 14:1–106, 1977

(23) ——: Some Fumigants, the Herbicides 2,4-D and 2,4,5-T, Chlorinated Dibenzodioxins and Miscellaneous Industrial Chemicals. IARC Monogr Eval Carcinog Risk Chem Man 15:1–345, 1977

(24) ——: Some Aromatic Amines and Related Nitro Compounds—Hair Dyes, Colouring Agents and Miscellaneous Industrial Chemicals. IARC Monogr Eval Carcinog Risk Chem Man 16:1–400, 1978

(25) ——: Some N-Nitroso Compounds. IARC Monogr Eval Carcinog Risk Chem Man 17:1–365, 1978

(26) National Institute for Occupational Safety and Health: Suspected Carcinogens. A subfile of the NIOSH Toxic Substances List. DHEW Publ No. (NIOSH) 75–188. Rockville, Md.: U.S. Dept Health, Educ, Welfare, 1975

(27) Arcos JC, Argus MF, Wolf G: Chemical Induction of Cancer: Structural Bases and Biological Mechanisms, vol I. New York and London: Academic Press, 1968

(28) Arcos JC, Argus MF: Chemical Induction of Cancer: Structural Bases and Biological Mechanisms, vol IIA. New York and London: Academic Press, 1974

(29) ——: Chemical Induction of Cancer: Structural Bases and Biological Mechanisms, vol IIB. New York and London: Academic Press, 1974

(30) Berenblum I: Carcinogenesis as a Biological Problem. Vol 34, Frontiers of Biology. Amsterdam: North-Holland, 1969

(31) Hueper WC, Conway WD: Chemical Carcinogenesis and Cancers. Springfield, Ill.: Thomas, 1964

(32) Clayson DG: Chemical Carcinogenesis. Boston: Little, Brown & Co., 1962

(33) Searle CE, ed: Chemical Carcinogens. American Chemical Society Monograph 173. Washington, D.C.: Am Chem Soc, 1976

(34) Teichmann B, Schramm T: Substanzen mit kanzerogener Wirkung. Berlin-Buch: Zentralinstitut für Krebsforschung der Akademie der Wissenschaften der DDR, 1973

(35) Tomatis L, Agthe C, Bartsch H, et al: Evaluation of the carcinogencity of chemicals: A review of the monograph program of the International Agency for Research on Cancer (1971 to 1977). Cancer Res 38:877–885, 1978

(36) National Cancer Institute, National Institute of Environmental Health Sciences, National Institute for Occupational Safety and Health: Estimates of the Fraction of Cancer in the United States Related to Occupational Factors. U.S. Dept Labor, Occupational Safety and Health Admin, Docket No. H–090. Washington, D.C.: 1978

(37) Rockette HE: Cause specific mortality of coal miners. J Occup Med 19:795–801, 1977

(38) Li FP, Fraumeni JF Jr., Mantel N, et al: Cancer mortality among chemists. J Natl Cancer Inst 43:1159–1164, 1969

(39) Koskela R–S, Hernberg S, Karava R, et al: A mortality study of foundry workers. Scand J Work Environ Health 2 (suppl 1): 73–89, 1969

(40) Gibson ES, Martin RH, Lockington JN: Lung cancer mortality in a steel foundry. J Occup Med 19:807–812, 1977

(41) Moss E, Lee WR: Occurrence of oral and pharyngeal cancers in textile workers. Br J Ind Med 31:224–232, 1974

(42) Lloyd JW, Decoufle P, Salvin LG: Unusual mortality experience of printing pressmen. J Occup Med 19:543–550, 1977

(43) Wagoner JK, Miller RW, Lundin FE Jr, et al: Unusual cancer mortality among a group of underground metal miners. N Engl J Med 269:284–289, 1963

(44) Redmond CK, Strobino BY, Cypess RH: Cancer experience among coke by-product workers. Ann NY Acad Sci 271:102–115, 1976

(45) Lemon RA, Lee JS, Wagoner JK, et al: Cancer mortality among cadmium production workers. Ann NY Acad Sci 271: 274–279, 1976

(46) Monson RR, Nakano KK: Mortality among rubber workers. I. White male union employees in Akron, Ohio. Am J Epidemiol 103:284–296, 1976

(47) Acheson ED: Nasal cancer in the furniture and boot and shoe manufacturing industries. Prev Med 5:295–315, 1976

(48) Brinton LA: A death certificate analysis of nasal cancer among furniture workers in North Carolina. Cancer Res 37: 3473–3474, 1976

(49) Aksoy M, Erdem S, Dinçol G: Leukemia in shoe-workers exposed chronically to benzene. Blood 44:837–841, 1974

(50) Cole P, Goldman MB: Occupation. *In* Persons at High Risk of Cancer (Fraumeni JF Jr, ed). New York: Academic Press, 1975, pp 167–184

(51) Slaga TJ, Sivak A, Boutwell RK, eds: Mechanisms of Tumor Promotion and Cocarcinogenesis. Carcinogenesis, a Comprehensive Survey, vol 2. New York: Raven Press, 1978

(52) Colburn NH: Tumor promotion and preneoplastic progression. *In* Modifers of Carcinogenesis. Carcinogenesis, a Comprehensive Survey (Slaga TJ, ed), vol 7. New York: Raven Press. In press

(53) International Agency for Research on Cancer: Aflatoxins. IARC Monogr Eval Carcinog Risk Chem Man 10:51–72, 1976

(54) ——: 2-Naphthylamine. IARC Monogr Eval Carcinog Risk Chem Man 4:97–111, 1974

(55) Magee PN, Montesano R, Preussman R: N-Nitroso compounds and related carcinogens. *In* Chemical Carcinogens (Searle CE, ed), American Chemical Society Monograph 173. Washington, D.C.: Am Chem Soc, 1976, pp 491–625

(56) Safe Drinking Water Committee, Advisory Center on Toxicology, National Research Council, National Academy of Sciences: Drinking Water and Health. Washington, D.C: Natl Acad Sci, 1977

(57) National Cancer Advisory Board: General criteria for assessing the evidence for carcinogenicity of chemical substances: Report of the Subcommittee on Environmental Carcinogenesis, National Cancer Advisory Board. J Natl Cancer Inst 58:461–465, 1544, 1977

(58) Fraumeni JF Jr, ed: Persons at High Risk of Cancer: An approach to Cancer Etiology and Control. Proceedings of a conference sponsored by the National Cancer Institute and the American Cancer Society, Key Biscayne, Fla., Dec. 10–12, 1974. New York: Academic Press, 1975

(59) Shubik P, Sicé J: Chemical carcinogenesis as a chronic toxicity test. A review. Cancer Res 16:728–742, 1956

(60) International Union Against Cancer: Report of symposium on potential cancer hazards from chemical additives and contaminants to foodstuffs. Acta Un Int Contra Cancr 13:170–193, 1957

(61) Subcommittee on Carcinogenesis, Food Protection Committee, Food and Nutrition Board, National Academy of Sciences-National Research Council: Problems in the evaluation of carcinogenic hazard from use of food additives. Cancer Res 21:429–456, 1961

(62) Joint FAO/WHO expert committee on food additives: Fifth report of the Joint FAO/WHO expert committee on food additives. Evaluation of Carcinogenic Hazards of Food Additives. WHO Tech Rep Ser 220:1–32, 1961

(63) WHO Expert Committee on the Prevention of Cancer: Report of the WHO Expert Committee on the Prevention of Cancer. WHO Tech Rep Ser 276:1–53, 1964

(64) Berenblum I, ed: Carcinogenicity Testing. Union Internationale Contre le Cancer Tech Rep Ser, vol 2. Geneva, Switzerland: UICC, 1969

(65) WHO Scientific Group: Report of the WHO Scientific Group on Principles for the Testing and Evaluation of Drugs for Carcinogenicity. WHO Tech Rep Ser 426:1–28, 1969

(66) Advisory Panel on Carcinogenicity of Pesticides: Carcinogenicity of pesticides. *In* Report of the Secretary's Commission on Pesticides and Their Relationship to Environmental Health, U.S. Dept Health, Educ, Welfare. Washington, D.C.: U.S. Govt Print Off, 1969, pp 459–506

(67) Ad Hoc Committee on the Evaluation of Low Levels of Environmental Carcinogens: Evaluation of environmental carcinogens—report to the Surgeon General. *In* Chemicals and the Future of Man. Hearings before the Subcommittee on Executive Reorganization and Government Research of the Committee on Government Operations of the U.S. Senate, 92d Congress, 1st session. Washington, D.C.: U.S. Govt Print Off, 1971, pp 171–183

(68) Food and Drug Administration Advisory Committee on Protocols for Safety Evaluation: Panel on carcinogenesis report on cancer testing in the safety evaluation of food additives and pesticides. Toxicol Appl Pharmacol 20:419–438, 1971

(69) Health and Welfare, Canada: The Testing of Chemicals for Carcinogenicity, Mutagenicity, and Teratogenicity. Ottawa, Canada: Ministry Health Welfare, 1973

(70) WHO Scientific Group: Report of the WHO Scientific Group for the Assessment of the Carcinogenicity and Mutagenicity of Chemicals. WHO Tech Rep Ser 548:1–19, 1974

(71) Sontag JM, Page NP, Saffiotti U: Guidelines for carcinogen bioassays in small rodents. Natl Cancer Inst Carcinogenesis Tech Rep Ser No. 1. Natl Inst Health, DHEW Publ No (NIH) 76–801. Washington, D.C.: U.S. Govt Print Off, 1976

(72) Albert RE, Train RE, Anderson E: Rationale developed by the Environmental Protection Agency for the assessment of carcinogenic risks. J Natl Cancer Inst 58:1537–1541, 1977

(73) Hiatt HH, Watson JD, Winsten JA, eds: Origins of Human Cancer. Cold Spring Harbor Conferences on Cell Proliferation, vol

4. Cold Spring Harbor, N.Y.: Cold Spring Harbor Laboratory, 1977

(74) Klaassen CD: Absorption, distribution and excretion of toxicants. *In* Toxicology, the Basic Science of Poisons (Casarett LJ, Doll J, eds). New York: Macmillan, 1975, pp 26–44

(75) Bischoff F, Bryson G: Carcinogenesis through solid state surfaces. Prog Exp Tumor Res 5:85–97, 1964

(76) Brand KG: Foreign body induced sarcomas. *In* Cancer, a Comprehensive Treatise (Becker FF, ed), vol 1. New York and London: Plenum Press, 1975, pp 485–511

(77) Rice JM: Carcinogenesis: A late effect of irreversible toxic damage during development. Environ Health Perspect 18:133–139, 1976

(78) Rice JM, ed: Perinatal Carcinogenesis. Natl Cancer Inst Monogr 51:1–282, 1979

(79) Food and Drug Administration: Nonclinical Laboratory Studies. Good Laboratory Practice Regulations. Fed Register 43: No. 247, 59986–60025, 1978

(80) Saffiotti U, Page NP: Releasing carcinogenesis test results: Timing and extent of reporting. Med Pediatr Oncol 3:159–167, 1977

(81) Farber E, Sporn MB, cochairmen: Symposium: Early lesions and the development of epithelial cancer. Cancer Res 36:2475–2706, 1976

(82) Stewart FW: Tumors of the breast. *In* Atlas of Tumor Pathology, sect IX, fasc 34. Washington, D.C.: Armed Forces Inst Pathol, 1950, pp 7–10

(83) Young S, Hallowes RC: Tumours of the mammary gland. *In* Pathology of Tumors in Laboratory Animals (Turusov VS, ed), vol 1, part 1. IARC Sci Publ 5:31–74, 1973

(84) Shellabarger CJ: Mammary neoplastic response of Lewis and Sprague-Dawley female rats to 7,12-dimethylbenz(a)anthracene or X-ray. Cancer Res 32:883–885, 1972

(85) Baserga R, Saffiotti U: Experimental studies on histogenesis of blood-borne metastases, Arch Pathol (Chicago) 59:26–34, 1955

(86) Kyriazis AP, Koka M, Vesselinovitch SD: Metastatic rate of liver tumors induced by diethylnitrosamine in mice. Cancer Res 34:2881–2886, 1974

(87) International Agency for Research on Cancer: Benzidine. IARC Monogr Eval Carcinog Risk Chem Man 1:80–86, 1972

(88) ——: Vinyl chloride. IARC Monogr Eval Carcinog Risk Chem Man 7:291–318, 1974

(89) Hanna MG Jr, Nettesheim P, Gilbert JR, eds: Inhalation Carcinogenesis. Atomic Energy Commission Symp Ser No. 18 (CONF-691001). Oak Ridge, Tenn.: U.S. Atomic Energy Comm, Div Tech Information Extension, 1970

(90) Karbe E, Park JF, eds: Experimental Lung Cancer. Carcinogenesis and Bioassays. Berlin, Heidelberg, New York: Springer-Verlag, 1974

(91) Clayson DB: Bladder carcinogenesis in rats and mice: Possibility of artifacts. J Natl Cancer Inst 52:1685–1689, 1974

(92) Miller EC, Miller JA: The metabolism of chemical carcinogens to reactive electrophiles and their possible mechanisms of action in carcinogenesis. *In* Chemical Carcinogens (Searle CE, ed). American Chemical Society Monograph 173. Washington, D.C.: Am Chem Soc, 1976, pp 737–762

(93) Fears TR, Tarnone RE, Chu KC: False positive and false negative rates for carcinogenicity screens. Cancer Res 37:1941–1945, 1977

(94) Hoel DG, Walburg HE Jr: Statistical analysis of survival experiments. J Natl Cancer Inst 49:361–372, 1972

(95) Peto R: Guidelines on the analyses of tumour rates and death rates in experimental animals. Br J Cancer 29:101–105, 1974

(96) Thomas DG, Breslow N, Gart JJ: Trend and homogeneity analyses of proportions and life table data. Comput Biomed Res 10:373–381, 1977

(97) Methods for Carcinogenesis Tests at the Cellular Level and Their Evaluation for the Assesment of Occupational Cancer Hazards. Proceedings of the meeting of the Scientific Committee, Milan, Italy, Dec. 4–6, 1977. Milan: Fondazione Carlo Erba, 1977

(98) Working Group on Mutagenicity Testing, Subcommittee on Environmental Mutagenesis, U.S. Department of Health, Education, and Welfare Committee to Coordinate Toxicology and Related Programs: Approaches to determining the mutagenic properties of chemicals: Risk to future generations. J Environ Pathol Toxicol 1:301–352, 1977

(99) Saffiotti U, Autrup H, eds: In Vitro Carcinogenesis. Guide to the Literature, Recent Advances and Laboratory Procedures. Natl Cancer Inst Carcinogenesis Tech Rep Ser No. 44. Natl Inst Health, DHEW Publ No. (NIH) 78–844. Washington, D.C.: U.S. Govt Print Off, 1978

(100) Asher IM, Zervos C, Eds: Structural Correlates of Carcinogenesis and Mutagenesis: A Guide to Testing Priorities? Proceedings of the Second Food and Drug Administration Office of Science Summer Symposium, Annapolis, Md., Aug. 31–Sept. 2, 1977. Rockville, Md.: Food Drug Admin, 1978

(101) International Commission on Radiological Protection: Radiation Protection—Recommendations of the International Commission on Radiological Protection. ICRP Publ 9. Oxford: Pergamon Press, 1966

(102) Task Group: Air pollution and cancer: Risk assessment methodology and epidemiological evidence. Environ Health Perspect 22:1–12, 1978

(103) Environental Studies Board, National Research Council, National Academy of Sciences: Carcinogenesis in man and laboratory animals. *In* Pest Control: An Assessment of Present and Alternative Technologies. Vol 1. Contemporary Pest Control Practices and Prospects: The Report of the Executive Committee. Washington, D.C.: Natl Acad Sci, 1975, pp 66–82

(104) Cornfield J: Carcinogenic risk assessment. Science 198:693–699, 1977

(105) ——: Models for carcinogenic risk assessment. Science 202:1107–1109, 1978

(106) Hoel DG, Gaylor DW, Kirschstein RL, et al: Estimation of risks of irreversible, delayed toxicity. J Toxicol Environ Health 1:133–151, 1975

(107) Mantel N, Bryan WR: "Safety" testing of carcinogenic agents. J. Natl Cancer Inst 27:455–470, 1961

(108) Mantel N, Bohidar NR, Brown CC, et al: An improved Mantel-Bryan procedure for "safety" testing of carcinogens. Cancer Res 35:865–872, 1975

(109) Crump KS, Hoel DG, Langley CH, et al: Fundamental carcinogenic processes and their implications for low dose risk assessment. Cancer Res 36:2973–2979, 1976

(110) Guess HA, Crump KS, Peto R: Uncertainty estimates for low-dose-rate extrapolations of animal carcinogenicity data. Cancer Res 37:3475–3483, 1977

(111) Gross MA, Fitzhugh OG, Mantel N: Evaluation of safety for food additives: An illustration involving the influence of methyl salicylate on rat reproduction. Biometrics 26:181–194, 1970

(112) Cox DR: Regression models and life-tables. J R Stat Soc [B] 34:187–202, 1972

(113) Guess HA, Crump KS: Low-dose-rate extrapolation of data from animal carcinogenicity experiments—analysis of a new statistical technique. Math Biosci 32:15–36, 1976

(114) Crump KS, Guess HA, Deal KL: Confidence intervals and test of hypotheses concerning dose response relations inferred from animal carcinogenicity data. Biometrics 33:437–451, 1977

(115) Hartley HO, Sielken RL: Estimation of "safe doses" in carcinogenic experiments. Biometrics 33:1–30, 1977

(116) Armitage P, Doll R: Stochastic models for carcinogenesis. *In* Proceedings of the Fourth Berkeley Symposium on Mathematical Statistics and Probability, Berkeley, Calif., June 20–July 30, 1960 (Neyman J, ed), vol 4. Berkeley, Calif.: Univ California Press, 1961, pp 19–38

(117) Druckrey H: Quantitative aspects of chemical carcinogenesis. *In* Potential Carcinogenic Hazards From Drugs (Evaluation of Risks) (Truhart RT, ed), Unio Internationale Contre le Cancer Monograph Ser, vol 7. Berlin: Springer-Verlag, 1967, pp 60–78

(118) Albert RE, Altshuler B: Considerations relating to the formulation of limits for unavoidable population exposures to environmental carcinogens. *In* Radionuclide Carcinogenesis (Sanders CL, Busch RH, Ballou JE, et al, eds), Atomic Energy Commission Symp Ser No. 29 (CONF-720505). Springfield, Va.: U.S. Atomic Energy Comm Office of Information Services, 1973, pp 233–253

(119) Chand N, Hoel DG: A comparison of models for determining safe levels of environmental agents. *In* Reliability and Biometry: Statistical Analysis of Lifelength (Proschan F, Serfling RJ, eds). Philadelphia: Soc Indust Appl Math, 1973, pp 681–700

(120) Schneiderman MA, Decoufle P, Brown CC: Thresholds for environmental cancer—biological and statistical considerations. NY Acad Sci. In press

(121) Peto R: Epidemiology, multistage models, and short-term mutagenicity tests. *In* Origins of Human Cancer. Cold Spring Harbor Conferences on Cell Proliferation (Hiatt HH, Watson JD, Winsten JA, eds), vol 4, book C. Cold Spring Harbor, N.Y.: Cold Spring Harbor Laboratory, 1977 pp 1403–1428

(122) Whittemore A, Altschuler B: Lung cancer incidence in cigarette smokers: Further analysis of Doll and Hill's data for

British physicians. Biometrics 32:805–816, 1976

(*123*) Second Task Force for Research Planning in Environmental Health Science: Environmental measurements of chemicals for assessment of human exposure, chapt 7. *In* Human Health and the Environment. Some Research Needs. Natl Inst Health, DHEW Publ No. (NIH) 77–1277. Washington, D.C.: Dept Health, Educ, Welfare, 1977, pp 217–242

(*124*) Bingham E, Falk H: Environmental carcinogens: The modifying effect of carcinogens on the threshold response. Arch Environ Health 19:770–783, 1969

(*125*) Harris CC, Autrup H, Stoner G, et al: Metabolism of benzo[α]pyrene and 7,12-dimethylbenz[α]anthracene in cultured human bronchus and pancreatic duct. Cancer Res 37:3349–3355, 1977

(*126*) Harris CC, Autrup H, Connor R, et al: Interindividual variation in binding of benzo[α]pyrene to DNA in cultured human bronchi. Science 194:1067–1069, 1976

(*127*) Harris CC, Autrup H, Stoner G: Metabolism of benzo(a)pyrene in cultured human tissues and cells. *In* Polycyclic Hydrocarbons and Cancer (T'so PO, Gelboin HV, eds), vol 2. New York and London: Academic Press, 1978, pp 331–342

[FR Doc. 79–20569 Filed 7–5–79; 8:45 am]
BILLING CODE 6560–01–M

federal register

Friday
July 6, 1979

Part IV

Department of Labor

Employment Standards Administration

Minimum Wages for Federal and Federally Assisted Construction

[4510-27]

DEPARTMENT OF LABOR

Employment Standards Administration, Wage and Hour Division

Minimum Wages for Federal and Federally Assisted Construction; General Wage Determination Decisions

General wage determination decisions of the Secretary of Labor specify, in accordance with applicable law and on the basis of information available to the Department of Labor from its study of local wage conditions and from other sources, the basic hourly wage rates and fringe benefit payments which are determined to be prevailing for the described classes of laborers and mechanics employed in construction activity of the character and in the localities specified therein.

The determinations in these decisions of such prevailing rates and fringe benefits have been made by authority of the Secretary of Labor pursuant to the provisions of the Davis-Bacon Act of March 3, 1931, as amended (46 Stat. 1494, as amended, 40 U.S.C. 276a) and of other Federal statutes referred to in 29 CFR 1.1 (including the statutes listed at 36 FR 306 following Secretary of Labor's order No. 24-70) containing provisions for the payment of wages which are dependent upon determination by the Secretary of Labor under the Davis-Bacon Act; and pursuant to the provisions of part 1 of subtitle A of title 29 of Code of Federal Regulations, Procedure for Predetermination of Wage Rates (37 FR 21138) and of Secretary of Labor's Orders 12-71 and 15-71 (36 FR 8755, 8756). The prevailing rates and fringe benefits determined in these decisions shall, in accordance with the provisions of the foregoing statutes, constitute the minimum wages payable on Federal and federally assisted construction projects to laborers and mechanics of the specified classes engaged on contract work of the character and in the localities described therein.

Good cause is hereby found for not utilizing notice and public procedure thereon prior to the issuance of these determinations as prescribed in 5 U.S.C. 553 and not providing for delay in effective date as prescribed in that section, because the necessity to issue construction industry wage determination frequently and in large volume causes procedures to be impractical and contrary to the public interest.

General wage determination decisions are effective from their date of publication in the Federal Register without limitation as to time and are to be used in accordance with the provisions of 29 CFR Parts 1 and 5. Accordingly, the applicable decision together with any modifications issued subsequent to its publication date shall be made a part of every contract for performance of the described work within the geographic area indicated as required by an applicable Federal prevailing wage law and 29 CFR, Part 5. The wage rates contained therein shall be the minimum paid under such contract by contractors and subcontractors on the work.

Modifications and Supersedeas Decisions to General Wage Determination Decisions

Modifications and supersedeas decisions to general wage determination decisions are based upon information obtained concerning changes in prevailing hourly wage rates and fringe benefit payments since the decisions were issued.

The determinations of prevailing rates and fringe benefits made in the modifications and supersedeas decisions have been made by authority of the Secretary of Labor pursuant to the provisions of the Davis-Bacon Act of March 3, 1931, as amended (46 Stat. 1494, as amended, 40 U.S.C. 276a) and of other Federal statutes referred to in 29 CFR 1.1 (including the statutes listed at 36 FR 306 following Secretary of Labor's order No. 224-70) containing provisions for the payment of wages which are dependent upon determination by the Secretary of Labor under the Davis-Bacon Act; and pursuant to the provisions of part 1 of subtitle A of title 29 of Code of Federal Regulations, Procedure for Predetermination of Wage Rates (37 FR 21138) and of Secretary of Labor's orders 13-71 and 15-71 (36 FR 8755, 8756). The prevailing rates and fringe benefits determined in foregoing general wage determination decisions, as hereby modified, and/or superseded shall, in accordance with the provisions of the foregoing statutes, constitute the minimum wages payable on Federal and federally assisted construction projects to laborers and mechanics of the specified classes engaged in contract work of the character and in the localities described therein.

Modifications and supersedeas decisions are effective from their date of publication in the Federal Register without limitation as to time and are to be used in accordance with the provisions of 29 CFR Parts 1 and 5.

Any person, organization, or governmental agency having an interest in the wages determined as prevailing is encouraged to submit wage rate information for consideration by the Department. Further information and self-explanatory forms for the purpose of submitting this data may be obtained by writing to the U.S. Department of Labor, Employment Standards Administration, Wage & Hour Division, Office of Government Contract Wage Standards, Division of Construction Wage Determinations, Washington, D.C. 20210. The cause for not utilizing the rulemaking procedures prescribed in 5 U.S.C. 553 has been set forth in the original general wage determination decision.

New General Wage Determination Decisions

New York.—NY79-3017; NY79-3018.
Texas.—TX79-4068.

Modifications to General Wage Determination Decisions

The numbers of the decisions being modified and their dates of publication in the Federal Register are listed with each State.

Alabama:	
AL79-1080	May 4, 1979.
District of Columbia:	
DC78-3098	Dec. 15, 1978.
Georgia:	
GA78-1088; GA78-1089	Oct. 13, 1978.
GA79-1014	Jan. 5, 1979.
Illinois:	
IL78-2126	Oct. 27, 1978.
IL79-2039	June 15, 1979.
New York:	
NY79-3011	May 18, 1979.
Ohio:	
OH78-2148	Nov. 13, 1978.
OH79-2047; OH79-2048	May 11, 1979.
Pennsylvania:	
PA78-3016	Apr. 14, 1978.
PA78-3044; PA78-3045	May 12, 1978.
PA78-3064; PA78-3065; PA78-3066; PA78-3067	Sept. 22, 1978.
PA78-3068; PA78-3070	Sept. 29, 1978.
PA78-3069	Oct. 6, 1978.
PA78-3099	Dec. 15, 1978.
PA79-3000	Jan. 2, 1979.
PA79-3001	Feb. 2, 1979.
PA79-3004; PA79-3005	Mar. 16, 1979.
PA79-3006	Mar. 30, 1979.
PA79-3007	Apr. 6, 1979.
PA79-3008	Apr. 27, 1979.
PA79-3012	May 18, 1979.

Supersedeas Decisions to General Wage Determination Decisions

The numbers of the decisions being superseded and their dates of publication in the Federal Register are listed with each State. Supersedeas Decision numbers are in parentheses following the numbers of the decisions being superseded.

Illinois:	
IL78-2071(IL79-2062)	Sept 1, 1978.
Indiana:	
IL78-2071(IL79-2062)	Sept. 1, 1978
Kentucky:	
KY79-1022(KY79-1108)	Feb. 2, 1979
Michigan:	
IL78-2071(IL79-2062)	Sept. 1, 1978
Minnesota:	
IL78-2071(IL79-2062)	Sept. 1, 1978.
New York:	
IL78-2071(IL79-2062)	Sept. 1, 1978.
NY77-3044(NY79-3014)	June 17, 1977.
NY78-3049(NY79-3015)	June 16, 1978.
NY78-3060(NY79-3016)	Aug. 4, 1978.
North Carolina:	
NC76-1094(NC79-1106)	Sept. 3, 1976.
Ohio:	
IL78-2071(IL79-2062)	Sept. 1, 1978.
OH78-2168(OH79-2064)	Dec. 29, 1978.
Pennsylvania:	
IL78-2071(IL79-2062)	Sept. 1, 1978.
South Carolina:	
SC76-1088(SC79-1105)	Aug. 27, 1976.
SC76-1126(SC79-1101)	Oct. 29, 1976.
Wisconsin:	
IL78-2071(IL79-2062)	Sept. 1, 1978.

Cancellation of General Wage Determination Decisions

None.

Signed at Washington, D.C. this 29th day of June 1979.

Dorothy P. Come,

Assistant Administrator, Wage and Hour Division.

BILLING CODE 4510-27-M

NEW DECISION

STATE: New York
COUNTY: Essex
DECISION NO.: NY79-3017
DATE: Date of Publication
DESCRIPTION OF WORK: Building Projects (does not include single family homes and garden type apartments up to and including 4 stories) Heavy, and Highway Construction Projects.

	Basic Hourly Rates	Fringe Benefits Payments			
		H & W	Pensions	Vacation	Education and/or Appr. Tr.
Asbestos Workers	12.67	.95	.41		.02
Boilermakers	11.80	1.05	10%		.02
Bricklayers, Cement Masons, Marble Masons, Plasterers, Stone Masons, Tile and Terrazzo Workers: Twps. of Chesterfield, Willsboro, Essex, Westport, Moriah, Crown Point, Ticonderoga, Elizabethtown, Lewis, Jay, Wilmington, Keene, North Hudson, Newcomb, North Elba and St. Armand	10.72	.60	.60	a	.02
Carpenters:					
Carpenter and Soft FLoor Layers	10.70	.55	.90	b	.005
Millwrights	10.95	.55	.90	b	.005
Piledrivermen	10.85	.55	.90	b	.005
Carpenter and Piledriver, Heavy and Highway	9.82	.55	.70		.025
Cement Masons, Heavy & Highway	9.60	.60	.80		
Electricians:					
Portion east of State Highway 28N and south of a line following the Tahawus-Schroon River Road (county highway 73) from State Highway 73, east on 73 to State Highway 22 near Ticonderoga, north on 22 to and including Crown Point	12.80	.70	3%+.70	c	.05
Portion of Newcomb and Minerva Twps. south and west of State Highway 28N, not including Tahawus	11.10	.70	3%+.95	c	.03
Remainder of County:					
Zone I-20 mile radius from Plattsburg and Saranac Lake:					
Electricians	11.65	.50	3%+.50	d	1%
Cable Splicers	11.95	.50	3%+.50	d	1%
Zone II-beyond 20 mile radius from Plattsburg and Saranac Lake:					
Electricians	11.85	.50	3%+.50	d	1%
Cable Splicers	12.15	.50	3%+.50	d	1%

DECISION NO. NY79-3017 PAGE

	Basic Hourly Rates	Fringe Benefits Payments			
		H & W	Pensions	Vacation	Education and/or Appr. Tr.
Glaziers:					
Twps. of Ticonderoga, Crown Point, North Hudson, Schroon, Minerva, Newcomb, Tahawus, and the town of Port Henry	8.42	.40	.30		
Remainder of County	8.03	.40	.20	e	.01
Ironworkers:					
Structural, Ornamental, Reinforcing, Machinery Mover, Rodman, Rigger, Fence Erector, and Stone Derrickman	10.71	.75	1.04		.04
Sheeter	10.96	.75	1.04		.04
Sheeter, Bucker-up	10.835	.75	1.04		.04
Rehabilitation work on residential structures over 4 stories defined to include all work, including demolition, alteration and repair on any existing structure which is intended for predominantly residential use	7.58	.75	1.04		.04
Laborers, Building:					
Common laborers and self propelled equipment operators	8.50	.70	.70	f	
Concrete or plaster pump operator, all men working on building demolition and wrecking	8.65	.70	.70	f	
Sandblasters on construction clean-up, Drillers, Wagon Jack or wagon Drill operator, Metal form and curb setter, asphalt raker, tail or screw man on paving machine	8.80	.70	.70	f	
Acetylene torch operator on demolition work and cutting of pipes, blasters	8.95	.70	.70	f	
Lathers	9.865	.20			.01
Leadburners	10.75	.40	.25	g	.01
Painters:					
Twps. of Ticonderoga, Crown Point, North Hudson, Schroon, Minerva, Newcomb, Tahawus, and the town of Port Henry:					
Brush	8.42	.40	.30		
Bridges, Structural Steel and Iron, Swing Scaffold, Bosun Chair, Water Towers, Tanks, Flagpoles, Window Jacks	8.87	.40	.30		

	Basic Hourly Rates	Fringe Benefits Payments			
		H & W	Pensions	Vacation	Education and/or Appr. Tr.
Painters: (cont'd)					
Sandblasting and Waterblasting, Spray	9.11	.40	.30		a
Roller (handle extention exceeding 6')	8.67	.40	.30		
Remainder of County:					
Painters	8.03	.40	.20	c	.01
Spray Cup, Paperhanging, Taping, Structural Steel, Swing Scaffold Boatswain Chair, Hanging Scaffold, and Sandblasting	8.53	.40	.20	e	.01
Bridge	8.50	.40	.20	e	.01
Seamless Floor Material	8.28	.40	.20	e	.01
Plumbers and Steamfitters	9.65	.60	.90		.05
Roofers:					
Roofers	11.30	1.37	.40		.04
Pitch and Asbestos	11.80	1.37	.40		.04
Sheet Metal Workers	11.87	1.00	.32	h	.07
Sprinkler Fitters	12.31	.75	1.05		.08
Welder-receive rate prescribed for craft performing operation tewhich welding is incidental.					

Paid Holidays: A-New Year's Day; B-Memorial Day; C-Independence Day; D-Labor Day; E-Thanksgiving Day; F-Christmas Day.

FOOTNOTES:

a. Paid Holidays: B, C, and D, provided the employee has been on the payroll 5 days prior to the holiday and he reports to work the day following the holiday.

b. Paid Holidays: B, D, and E, provided the employee is on the payroll the week before the holiday and works the day following the holiday.

c. Paid Holiday: E.

d. Paid Holidays: B, C, D, E, and F.

e. Paid Holidays: An employee shall have 2 consecutive hours off in which to vote on Election Day, B, C, D, and F.

f. Paid Holidays: B and D, provided the employee has been employed on any day of the week before the holiday.

g. Paid Holidays: A through F, Washington's Birthday, Good Friday, and Christmas Eve, providing the employee has worked the 30 full days during the 90 calendar days prior to the holiday

h. The last 2 hours off with pay on the 1st Tuesday after the 1st Monday in November provided they are working on a job beyond 50 miles from the shop.

DECISION NO. NY79-3017 PAGE 5

LABORERS: HEAVY AND HIGHWAY CONSTRUCTION	Basic Hourly Rates	Fringe Benefits Payments			
		H & W	Pensions	Vacation	Education and/or Appr. Tr.
CLASS A	8.84	.70	.70	i	
CLASS B	9.04	.70	.70	i	
CLASS C	9.24	.70	.70	i	
CLASS D	9.44	.70	.70	i	
PAID HOLIDAY: A-New Year's Day; B-Memorial Day; C-Independence Day; D-Labor Day; E-Thanksgiving Day; F-Christmas Day					

FOOTNOTE:
i. Paid Holidays: A through F, provided the employee has worked the day before and after the holiday.

LABORERS: HEAVY AND HIGHWAY CONSTRUCTION:

CLASS A
Laborers, drill helpers, flagmen, outboard and hand boats.

CLASS B
Bull float, chain saw, concrete aggregate, bin concrete bootman, gin buggy, hand or machine vibrator, jackhammer, mason tender, mortar mixer, pavement breaker, handlers of all steel mesh, small generators for laborers' tools, installation of bridge drainage pipe, pipelayers, vibrator type rollers, tamper, drill doctor, tail or screw op. on asphalt paver, water pump op. (1½" and single diaphram), nozzle (asphalt, gunnite, seeding and sand-blasting), laborers on chain link fence erection, rock splitter and power unit, pusher type concrete saw and all other gas, electric, oil and air tool operators, wrecking laborer.

CLASS C
All rock or drill machine operators (except quarry master and similar type), acetylene torch op., asphalt raker, powderman.

CLASS D
Blasters, form setter, stone or granite curb setters.

DECISION NO. NY79-3017 PAGE 6

Line Construction

	Basic Hourly Rates	Fringe Benefits Payments			
		H & W	Pensions	Vacation	Education and/or Appr. Tr.
Electrical Overhead and Underground Distribution Work:					
Lineman and Technicians	10.50	1.00	3%+.75	k	3½%
Cable Splicers	13.70	1.00	3%+.75	k	3½%
Groundman Digging Machine Operator and Groundman Dynamiteman	9.45	1.00	3%+.75	k	3½%
Groundman Mobile Equipment Operator, Mechanic 1st Class, Groundman Truck Driver (tractor trailer units)	8.40	1.00	3%+.75	k	3½%
Groundman Truck Driver, Driver-Mechanic, Groundman (experienced)	7.825	1.00	3%+.75	k	3½%
All Overhead Transmission Line Work and Lighting For Athletic Fields:					
Lineman and Technicians	11.85	1.00	3%+.75	k	3½%
Groundman Digging Machine Operator, Groundman Dynamiteman	10.665	1.00	3%+.75	k	3½%
Groundman Mobile Equipment Operator, Mechanic 1st Class, Groundman Truck Driver (tractor trailer unit)	9.48	1.00	3%+.75	k	3½%
Groundman Truck Driver, Driver-Mechanic, Groundman (experienced)	8.8875	1.00	3%+.75	k	3½%
All Pipe Type Cable Installations:					
Lineman and Ground Equipment Operator	12.45	1.00	3%+.75	k	3½%
Cable Splicer	13.695	1.00	3%+.75	k	3½%
Groundman Truck Driver, Groundman (experienced)	9.3375	1.00	3%+.75	k	3½%

DECISION NO. NY79-3017 PAGE 7

LINE CONSTRUCTION (CONT'D)	Basic Hourly Rates	Fringe Benefits Payments			
		H & W	Pensions	Vacation	Education and/or Appr. Tr.
Sub-station, Switching Structures (when not part of the line), Traffic Signals, Street Lighting and Electrical, Telephone or CATV Commercial Work:					
Lineman and Technicians	12.45	1.00	3%+.75	k	3½%
Cable Splicers	13.695	1.00	3%+.75	k	3½%
Groundman Mobile Equipment Operator, Mechanic 1st Class, Groundman Truck Driver (tractor trailer unit)	9.96	1.00	3%+.75	k	3½%
Groundman Truck Driver, Driver-Mechanic, Groundman(experienced)	9.3375	1.00	3%+.75	k	3½%
Groundman Dynamiteman, Groundman Digging Machine Operator	11.205	1.00	3%+.75	k	3½%
Telephone and other Communication Systems, both overhead and underground:					
Linemen and Installer Repairmen	8.34	.40	3%+.25	k	1%
Splicers	8.89	.40	3%+.25	k	1%
Groundman Digging Machine Operator	7.73	.40	3%+.25	k	1%
Groundman	5.72	.40	3%+.25	k	1%
Groundman Truck Driver	6.82	.40	3%+.25	k	1%
Groundman Dynamiteman	6.60	.40	3%+.25	k	1%

Paid Holidays: A-New Year's Day; B-Memorial Day; C-Independence Day; D-Labor Day; E-Thanksgiving Day; F-Christmas Day.

FOOTNOTES:

k. Paid Holidays: A through F, Washington's Birthday, Good Friday, and Election Day for President of the United States and Governor of New York State, provided the employee works the day before and after the holiday.

DECISION NO. NY79-3017 PAGE 8

BUILDING CONSTRUCTION - POWER EQUIPMENT OPERATORS:

GROUP 1: Oilers

GROUP 2: Firemen and heavy duty greasers, all boilers and steam generators

GROUP 3: Pumps, vibrators, concrete mixers, spreaders, concrete finishing machines, mortar mixers, air compressors, dust collectors, welding machines well points, two or more Herman Nelson and like heaters, batch and plant op., seed and mulching machines, generators, temporary light plants, concrete pump, beltcrete power pac (beltcrete system), electric submersible pump 4" and over

GROUP 4: Dinkey locomotives, Barber Greene loaders, loaders and conveyors, tractors, scoopmobiles, bulldozers, road rollers, form fine graders, power brooms and sweepers

GROUP 5: Black top spreaders, black top rollers, high lifts, fork lifts, one drum hoist or hod hoists, post hole diggers, traxcavators, core and well well drillers (one drum), economobile and similar type machines, elevators, A-L frame winches, power hoisting (single drum)

GROUP 6: LeTourneau graders or scrapers, trenching machines, push cart

GROUP 7: Tractor road pavers, cranes, power road graders, shovels, backhoes, draglines, pile drivers, hoists two or more drums, three drum engines, hysters, two drum and swinging engines, three drum swinging engine, locomotive cranes, gradalls, hydrocrane, model CHB Vibrotamp or similar, Murphy type diesel generator-beltcrete system, side boom, hydro hammer, tractor mounted drill (quarry master), euclid loaders, concrete pumps, all CMI equipment, concrete central mix plant, automated asphalt, concrete central plant, derrick, whirlies, tower cranes, cableways, hydraulic cranes, power hoisting (2 drum and over), mucking machine

	Basic Hourly Rates	Fringe Benefits Payments			
		H & W	Pensions	Vacation	App. Tr.
GROUP 1	$10.58	.95	.75	1	.15
GROUP 2	10.65	.95	.75	1	.15
GROUP 3	10.78	.95	.75	1	.15
GROUP 4	10.99	.95	.75	1	.15
GROUP 5	11.35	.95	.75	1	.15
GROUP 6	11.52	.95	.75	1	.15
GROUP 7	11.73	.95	.75	1	.15

PAID HOLIDAYS:

A-New Year's Day; B-Memorial Day; C-Independence Day; D-Labor Day; E-Thanksgiving Day; F-Christmas Day.

FOOTNOTES:

1. Holidays: A through F.

POWER EQUIPMENT OPERATORS: HEAVY & HIGHWAY CONSTRUCTION	Basic Hourly Rates	Fringe Benefits Payments			
		H & W	Pensions	Vacation	Education and/or Appr. Tr.
GROUP I	10.83	.95	1.05	m	.15
GROUP II	10.47	.95	1.05	m	.15
GROUP III	9.46	.95	1.05	m	.15
GROUP IV	8.56	.95	1.05	m	.15

PAID HOLIDAYS:
A-New Year's Day; B-Memorial Day; C-Independence Day; D-Labor Day; E-Thanksgiving Day; F-Christmas Day.

FOOTNOTES:
m. Paid Holidays: A through F, providing the employee works the day before and the day after the holiday.

POWER EQUIPMENT OPERATORS: HEAVY AND HIGHWAY CONSTRUCTION

Group I - Automated concrete spreader (CMI), automatic fine grader, backhoe (except tractor mounted, rubber tired), belt placer (CMI type), blacktop plant (automated), cableway, caisson auger, central mix concrete plant (automated), cherry picker (over 5 tons capacity), concrete pump (8" or over), crane, cranes & derricks (steel erection), dragline, dredge, dual drum paver, excavator (all purpose-hydraulically operated,(gradall or similar) fork lift (factor rated 15 ft. and over), front end loader 4 c.y. and over) head tower (sauorman or equal) hoist (2 or 3 drum), mine hoist, mucking machine or mole, over head crane (gantry or straddle type), piledriver, power grader, quarry master (or equivalent), scraper, shovel, sideboom, slip form paver (if second man is needed,he shall be an oiler), tractor drawn belt type loader, truck crane, tunnel shovel.

Group II - Backhoe (tractor mounted, rubber tired), bituminous spredder and mixer,blacktop plant (non-automated), blast or rotary drill truck or tractor mounted), boring machine, cage-hoist, central mix plant (non-automated and all concrete batching plants), cherry picker (5 tons capacity and under), compressor (4 or less) exceeding 2000 C.F.M. combined capacity, concrete paver (over 16S), concrete pump (under 8"), crusher, diesel power unit, drill rigs (tractor mounted), front end loader (under 4 c.y.), hi-pressure - boiler (15 lbs. and over), hoist (one drum) Kolman plant loader and similar type loaders (if another man is required to clean screen or to maintain the equipment, he shall be an oiler), locomotive maintenance/engineer/greaseman/welder, mixer (for stablized base self-propelled),monorail machine, plant engineer, pump crete, ready mix concrete plant, refrigeration equipment (for soil stabilization), road widener, roller (all above subgrade), tractor with dozer and/or pusher, trencher, tugger-hoist, winch, winch cat.

POWER EQUIPMENT OPERATORS: HEAVY AND HIGHWAY CONSTRUCTION CONT'D.

Group III - A-frame truck, compressors (4 not to exceed 2000 C.F.M. combined capacity or 3 or less with more than 1200 C.F.M. but not to exceed 2000 C.F.M.), compressors (any size but subject to other provisions for compressors), dust collectors, generators, pumps, welding machines (4 of any type of combination), concrete pavement spreaders and finishers, conveyor, drill-core, drill-well, electric pumps used in conjunction with well point system, farm tractor with accessories, fine grade machine, fork lift (under 15 ft.), gunite machine, hammers (hydraulic-self-propelled), post hole digger and post driver, power sweeper, roller (grade and fill), submersible electric pump (when used in lieu of well point system), tractor with towed accessories, vibratory compactor, vibro tamp, well point.

Group IV - Aggregate plant, boiler (used in conjunction with production), cement and bin operator, compressors (3 or less not to exceed 1200 C.F.M. combined capacity), compressor (any size, but subject to other provisions for compressors) dust collectors, generator pumps, welding machines (3 or less of any type or combination), concrete paver or mixer (16S and under), concrete saw (self-propelled), fireman, form tamper, hydraulic pump (jacking system), lighting plants, mulching machine, oiler parapet- (concrete or pavement grinder), power broom (towed), power heaterman, revinius widener, shell winder, steam cleaner, tractor.

POWER EQUIPMENT OPERATORS: Rehabilitation work on residential structures over 4 stories defined to include demolition, alteration, and repair on any existing structure which is intended for predominantly residential use

GROUP 1: Oilers

GROUP 2: Firemen and heavy duty greasers, all boilers and steam generators

GROUP 3: Pumps, vibrators, concrete mixers, spreaders, concrete finishing machines, mortar mixers, air compressors, dust collectors, welding machines well points, two or more Herman Nelson and like heaters, batch and plant op., seed and mulching machines, generators, temporary light plants, concrete pump, beltcrete power pac (beltcrete system), electric submersible pump 4" and over

GROUP 4: Dinkey locomotives, Barber Greene loaders, loaders and conveyors, tractors, scoopmobiles, bulldozers, road rollers, form fine graders, power brooms and sweepers

GROUP 5: Black top spreaders, black top rollers, high lifts, fork lifts, one drum hoist or hod hoists, post hole diggers, traxcavators, core and well well drillers (one drum), economobile and similar type machines, elevators, A-L frame winches, power hoisting (single drum)

GROUP 6: LeTourneau graders or scrapers, trenching machines, push cart

GROUP 7: Tractor road pavers, cranes, power road graders, shovels, backhoes, draglines, pile drivers, hoists two or more drums, three drum engines, hysters, two drum and swinging engines, three drum swinging engine, locomotive cranes, gradalls, hydrocrane, model CHB Vibrotamp or similar, Murphy type diesel generator-beltcrete system, side booms, hydro hammer, tractor mounted drill (quarry master), euclid loaders, concrete pumps, all CMI equipment, concrete central mix plant, automated asphalt, concrete central plant, derrick, whirlies, tower cranes, cableways, hydraulic cranes, power hoisting (2 drum and over), mucking machine

	Basic Hourly Rates	Fringe Benefits Payments			
		H & W	Pensions	Vacation	App. Tr.
GROUP 1	$ 7.40	.95	1.05	o	.15
GROUP 2	7.45	.95	1.05	o	.15
GROUP 3	7.55	.95	1.05	o	.15
GROUP 4	7.71	.95	1.05	o	.15
GROUP 5	7.98	.95	1.05	o	.15
GROUP 6	8.10	.95	1.05	o	.15
GROUP 7	8.26	.95	1.05	o	.15

PAID HOLIDAYS:
A-New Year's Day; B-Memorial Day; C-Independence Day; D-Labor Day; E-Thanksgiving Day; F-Christmas Day.

FOOTNOTES:
o. Holidays: A through F.

TRUCK DRIVERS: BUILDING, HEAVY AND HIGHWAY CONSTRUCTION	Basic Hourly Rates	Fringe Benefits Payments			
		H & W	Pensions	Vacation	Education and/or Appr. Tr.
CLASS 1	9.39	.65	.85	n	
CLASS 2	9.44	.65	.85	n	
CLASS 3	9.49	.65	.85	n	
CLASS 4	9.64	.65	.85	n	
CLASS 5	9.79	.65	.85	n	
PAID HOLIDAYS: A-New Year's Day; B-Memorial Day; C-Independence Day; D-Labor Day; E-Thanksgiving Day; F-Christmas Day.					

FOOTNOTE:
n. Paid Holidays: A through F, provided the employee has worked the working day before and after the holiday.

TRUCK DRIVERS: HEAVY AND HIGHWAY CONSTRUCTION:

CLASS 1
Warehouseman, yardmen, truck helpers, pickups, panel trucks, flatboy material trucks (straight jobs), single axle dump trucks, dumpsters, material checker and receivers, greasers, truck firemen, mechanic helpers and parts chaser.

CLASS 2
Tandems, batch trucks, mechanics and dispatcher.

CLASS 3
Semi-trailers, low-boy trucks, asphalt distributors trucks, agitator, mixer trucks and dumperete type vehicles, truck mechanic.

CLASS 4
Specialized earth moving equipment - euclid type or similar off-highway equipment, where not self loaded, and straddle (ross) carrier.

CLASS 5
Off-highway tandem back-dump, twin engine equipment and double hitched equipment where not self loaded.

NEW DECISION

STATE: New York COUNTY: Clinton
DECISION NO.: NY79-3018 DATE: Date of Publication
DESCRIPTION OF WORK: Building Projects (does not include single family homes and garden type apartments up to and including 4 stories), Heavy & Highway Construction Projects.

	Basic Hourly Rates	Fringe Benefits Payments			
		H & W	Pensions	Vacation	Education and/or Appr. Tr.
Asbestos Workers	12.67	.95	.41		.02
Boilermakers	11.80	.95	10%		.02
Bricklayers, Cement Masons, Marble Masons, Plasterers, Tile and Terrazzo Workers	10.72	.60	.60	a	.02
Cement Masons, Heavy & Highway	9.80	.60	.60		
Carpenters and Soft FLoor Layers	10.70	.55	.90	a	.005
Piledriverman	10.85	.55	.90	a	.005
Millwrights	10.95	.55	.90	a	.005
Carpenters, Heavy & Highway	9.82	.55	.70		.025
Electricians:					
Zone I - City of Plattsburg and 5 mile radius:					
Electricians	11.45	.50	3%+.50	c	1%
Cable Splicers	11.75	.50	3%+.50	c	1%
Zone II - From Zone I to a 20 mile radius of Plattsburg:					
Electricians	11.65	.50	3%+.50	c	1%
Cable Splicers	11.95	.50	3%+.50	c	1%
Zone III - Beyond Zone II:					
Electricians	11.85	.50	3%+.50	c	1%
Cable Splicers	12.15	.50	3%+.50	c	1%
Elevator Constructors	10.77	.745	.56	d+e	.025
Elevator Constructors Helpers	7.54	.745	.56	d+e	.025
Elevator Constructors Helpers Probationary	5.385				
Glaziers	8.03	.40	.20	f	.01
Ironworkers:					
Structural, Ornamental, Reinforcing, Rodmen, Machinery Mover, Riggers, Fence Erectors, Stone Derrickmen	10.71	.75	1.04		.04
Sheeter	10.96	.75	1.04		.04
Sheeter, Bucker-up	10.835	.75	1.04		.04
Rehabilitation work on residential structures defined to include demolition, alteration and repair on any structure intended for predominantly residential use	7.58	.75	1.04		.04

DECISION NO. NY79-3018 Page 2

	Basic Hourly Rates	Fringe Benefits Payments			
		H & W	Pensions	Vacation	Education and/or Appr. Tr.
Laborers, Building:					
Common Laborers and Self Propelled Equipment Operators	8.50	.70	.70	g	
Concrete or Plaster Pump Operator, All men on building demolition and wrecking	8.65	.70	.70	g	
Sandblasters and Construction cleanup, Driller, Wagon Jack or Wagon Drill Operator, Metal Form and Curb Setter, Asphalt Raker, Tail or Screw man on paving Machine	8.80	.70	.70	g	
Acetylene Torch Operator on Demolition Work and Cutting of Pipes Blasters	8.95	.70	.70	g	
Lathers	9.865	.20			.01
Leadburners	10.75	.40	.25	h	.01
Painters:					
Painters	8.03	.40	.20	f	.01
Spray Cup, Paperhanging, Spray Structural Steel, Swinging Scaffold, Boatswain Chair, Hanging Scaffold, Sandblasting and Taping	8.53	.40	.20	f	.01
Bridges	8.78	.40	.20	f	.01
Seamless Floor Material	8.50	.40	.20	f	.01
Plumbers and Steamfitters	8.28	.40	.20	f	.01
Roofers:	9.15	.60	.90		.05
Roofer	11.30	1.37	.40		.02
Pitch and Asbestos	11.80	1.37	.40		.02
Sheet Metal Workers	11.87	1.00	1.32	i	.07
Rehabiltation work on residential structures over 4 stories defined to include demolition, alteration and repair on any existing structure which is intended for predominantly residential use	7.47	.95	3%+.90	i	.05
Sprinkler Fitters	12.31	.75	1.05		.08
Truck Drivers, Building:					
Straight, winch, transit mix on job site, road oilters, dump, panel, pick-up, water and fuel trucks on site (including nozzle)	9.37	1.00	.81		.12
Euclid or similar Equipment	9.56	1.00	.81		.12
Lowboy or Lowboy Trailers	9.70	1.00	.81		.12
Welders-receive rate prescribed for craft performing operation to which welding is incidental					

PAID HOLIDAYS: A-New Year's Day; B-Memorial Day; C-Labor Day; D-Independence Day; E-Thanksgiving Day; F-Christmas Day.

FOOTNOTES:

a. Paid Holidays: B, C, D, provided the employee is on the payroll 5 days prior to the holiday and reports to work the day after the holiday.
b. B, C, E, providing the employee has been on the payroll the week before the holida and works the day following the holiday. (Paid Holidays).
c. B, C, D, E, and F. (Paid Holidays).
d. A through F plus the Day after Thanksgiving. (Paid Holidays).
e. Employer contributes 8% of basic hourly rate for 5 years or more of service or 6% of basic hourly rate for 6 months to 5 years of service as Vacation Pay Credit.
f. B, C, D, F, plus 2 consecutive hours to Vote on Election Day. (Paid Holidays).
g. B, C, provided the employee has been employed on any day of the week before the holiday. (Paid Holidays).
h. A through F, Washington's Birthday, Good Friday, and Christmas Eve, providing the employee has worked 30 full days during the 90 calendar days prior to the holiday and the regularly scheduled work days immediately preceeding and following the holiday. (Paid Holidays).
i. The last 2 hours off with pay on the 1st Tuesday after the 1st Monday of November, provided they are working on a job beyond 50 miles from the shop.

LABORERS: HEAVY AND HIGHWAY CONSTRUCTION	Basic Hourly Rates	Fringe Benefits Payments			
		H & W	Pensions	Vacation	Education and/or Appr. Tr.
CLASS A	8.84	.70	.70	j	
CLASS B	9.04	.70	.70	j	
CLASS C	9.24	.70	.70	j	
CLASS D	9.44	.70	.70	j	

PAID HOLIDAY:
A-New Year's Day; B-Memorial Day; C-Independence Day; D-Labor Day; E-Thanksgiving Day; F-Christmas Day

FOOTNOTE:

j. Paid Holidays: A through F, provided the employee has worked the day before and after the holiday.

LABORERS: HEAVY AND HIGHWAY CONSTRUCTION:

CLASS A
Laborers, drill helpers, flagmen, outboard and hand boats.

CLASS B
Bull float, chain saw, concrete aggregate, bin concrete bootman, gin buggy, hand or machine vibrator, jackhammer, mason tender, mortar mixer, pavement breaker, handlers of all steel mesh, small generators for laborers' tools, installation of bridge drainage pipe, pipelayers, vibrator type rollers, tamper, drill doctor, tail or screw op. on asphalt paver, water pump op. (1½" and single diaphram), nozzle (asphalt, gunnite, seeding and sandblasting), laborers on chain link fence erection, rock splitter and power unit, pusher type concrete saw and all other gas, electric, oil and air tool operators, wrecking laborer.

CLASS C
All rock or drill machine operators (except quarry master and similar type), acetylene torch op., asphalt raker, powderman.

CLASS D
Blasters, form setter, stone or granite curb setters.

DECISION NO. NY79-3018 PAGE 5

Line Construction

	Basic Hourly Rates	Fringe Benefits Payments			
		H & W	Pensions	Vacation	Education and/or Appr. Tr.
Electrical Overhead and Underground Distribution Work:					
Lineman and Technicians	10.50	1.00	3%+.75	k	3½%
Cable Splicers	13.70	1.00	3%+.75	k	3½%
Groundman Digging Machine Operator and Groundman Dynamiteman	9.45	1.00	3%+.75	k	3½%
Groundman Mobile Equipment Operator, Mechanic 1st Class, Groundman Truck Driver (tractor trailer units)	8.40	1.00	3%+.75	k	3½%
Groundman Truck Driver, Driver-Mechanic, Groundman (experienced)	7.825	1.00	3%+.75	k	3½%
All Overhead Transmission Line Work and Lighting For Athletic Fields:					
Lineman and Technicians	11.85	1.00	3%+.75	k	3½%
Groundman Digging Machine Operator, Groundman Dynamiteman	10.665	1.00	3%+.75	k	3½%
Groundman Mobile Equipment Operator, Mechanic 1st Class, Groundman Truck Driver (tractor trailer unit)	9.48	1.00	3%+.75	k	3½%
Groundman Truck Driver, Driver-Mechanic, Groundman (experienced)	8.8875	1.00	3%+.75	k	3½%
All Pipe Type Cable Installations:					
Lineman and Ground Equipment Operator	12.45	1.00	3%+.75	k	3½%
Cable Splicer	13.695	1.00	3%+.75	k	3½%
Groundman Truck Driver, Groundman (experienced)	9.3375	1.00	3%+.75	k	3½%

DECISION NO. NY79-3018 PAGE 6

LINE CONSTRUCTION (CONT'D)	Basic Hourly Rates	Fringe Benefits Payments			
		H & W	Pensions	Vacation	Education and/or Appr. Tr.
Sub-station, Switching Structures (when not part of the line), Traffic Signals, Street Lighting and Electrical, Telephone or CATV Commercial Work:					
Lineman and Technicians	12.45	1.00	3%+.75	k	3½%
Cable Splicers	13.695	1.00	3%+.75	k	3½%
Groundman Mobile Equipment Operator, Mechanic 1st Class, Groundman Truck Driver (tractor trailer unit)	9.96	1.00	3%+.75	k	3½%
Groundman Truck Driver, Driver-Mechanic, Groundman (experienced)	9.3375	1.00	3%+.75	k	3½%
Groundman Dynamiteman, Groundman Digging Machine Operator	11.205	1.00	3%+.75	k	3½%
Telephone and other Communication Systems, both overhead and underground:					
Linemen and Installer Repairmen	8.34	.40	3%+.25	k	1%
Splicers	8.89	.40	3%+.25	k	1%
Groundman Digging Machine Operator	7.73	.40	3%+.25	k	1%
Groundman	5.72	.40	3%+.25	k	1%
Groundman Truck Driver	6.82	.40	3%+.25	k	1%
Groundman Dynamiteman	6.60	.40	3%+.25	k	1%

Paid Holidays: A-New Year's Day; B-Memorial Day; C-Independence Day; D-Labor Da E-Thanksgiving Day; F-Christmas Day.

FOOTNOTES:

k. Paid Holidays: A through F, Washington's Birthday, Good Friday, and Electic Day for President of the United States and Governor of New York State, provided the employee works the day before and after the holiday.

DECISION NO. NY79-3018 PAGE 7

BUILDING CONSTRUCTION - POWER EQUIPMENT OPERATORS:

GROUP 1: Oilers

GROUP 2: Firemen and heavy duty greasers, all boilers and steam generators

GROUP 3: Pumps, vibrators, concrete mixers, spreaders, concrete finishing machines, mortar mixers, air compressors, dust collectors, welding machines well points, two or more Herman Nelson and like heaters, batch and plant op., seed and mulching machines, generators, temporary light plants, concrete pump, belterete power pac (belterete system), electric submersible pump 4" and over

GROUP 4: Dinkey locomotives, Barber Greene loaders, loaders and conveyors, tractors, scoopmobiles, bulldozers, road rollers, form fine graders, power brooms and sweepers

GROUP 5: Black top spreaders, black top rollers, high lifts, fork lifts, one drum hoist or hod hoists, post hole diggers, traxcavators, core and well well drillers (one drum), economobile and similar type machines, elevators, A-L frame winches, power hoisting (single drum)

GROUP 6: LeTourneau graders or scrapers, trenching machines, push cart

GROUP 7: Tractor road pavers, cranes, power road graders, shovels, backhoes, draglines, pile drivers, hoists two or more drums, three drum engines, hysters, two drum and swinging engines, three drum swinging engine, locomotive cranes, gradalls, hydrocrane, model CHB Vibrotamp or similar, Murphy type diesel generator-belterete-system, side booms, hydro hammer, tractor mounted drill (quarry master), euclid loaders, concrete pumps, all CMI equipment, concrete central mix plant, automated asphalt, concrete central plant, derrick, whirlies, tower cranes, cableways, hydraulic cranes, power hoisting (2 drum and over), mucking machine

	Basic Hourly Rates	Fringe Benefits Payments			
		H & W	Pensions	Vacation	App. Tr.
GROUP 1	$10.58	.95	.75	1	.15
GROUP 2	10.65	.95	.75	1	.15
GROUP 3	10.78	.95	.75	1	.15
GROUP 4	10.99	.95	.75	1	.15
GROUP 5	11.35	.95	.75	1	.15
GROUP 6	11.52	.95	.75	1	.15
GROUP 7	11.73	.95	.75	1	.15

PAID HOLIDAYS:
A-New Year's Day; B-Memorial Day; C-Independence Day; D-Labor Day; E-Thanksgivin Day; F-Christmas Day.

FOOTNOTES:
1. Holidays: A through F.

DECISION NO. NY79-3018 PAGE 8

POWER EQUIPMENT OPERATORS: HEAVY & HIGHWAY CONSTRUCTION	Basic Hourly Rates	Fringe Benefits Payments			
		H & W	Pensions	Vacation	Educatio and/or Appr. Tr
GROUP I	10.83	.95	1.05	m	.15
GROUP II	10.47	.95	1.05	m	.15
GROUP III	9.46	.95	1.05	m	.15
GROUP IV	8.56	.95	1.05	m	.15

PAID HOLIDAYS:
A-New Year's Day; B-Memorial Day; C-Independence Day; D-Labor Day; E-Thanksgiving Day; F-Christmas Day.

FOOTNOTES:
m. Paid Holidays: A through F, providing the employee works the day before and the day after the holiday.

POWER EQUIPMENT OPERATORS: HEAVY AND HIGHWAY CONSTRUCTION

Group I - Automated concrete spreader (CMI), automatic fine grader, backhoe (except tractor mounted, rubber tired), belt placer (CMI type), blacktop plant (automated), cableway, caisson auger, central mix concrete plant (automated), cherry picker (over 5 tons capacity), concrete pump (8" or over), crane, cranes & derricks (steel erection), dragline, dredge, dual drum paver, excavator (all purpose-hydraulically operated,(gradall or similar) fork lift (factor rated 15 ft. and over), front end loader 4 c.y. and over) head tower (sauerman or equal) hoist (2 or 3 drum), mine hoist, mucking machine or mole, over head crane (gantry or straddle type), pilediver, power grader, quarry master (or equivalent), scraper, shovel, sidebeam, slip form paver (if second man is needed,he shall be an oiler), tractor drawn belt type loader, truck crane, tunnel shovel.

Group II - Backhoe (tractor mounted, rubber tired), bituminous spreader and mixer,blacktop plant (non-automated), blast or rotary drill truck or tractor mounted), boring machine, cage-hoist, central mix plant (non-automated and all concrete batching plants), cherry picker (5 tons capacity and under), compressor (4 or less) exceeding 2000 C.F.M. combined capacity, concrete paver (over 16S), concrete pump (under 8"), crusher, diesel power unit, drill rigs (tractor mounted), front end loader (under 4 c.y.), hi-pressure - boiler (15 lbs. and over), hoist (one drum) Kolman plant loader and similar type loaders (if another man is required to clean screen or to maintain the equipment, he shall be an oiler), locomotive maintenance/engineer/greaseman/welder, mixer (for stablized base self-propelled),monorail machine, plant engineer, pump crete, ready mix concrete plant, refrigeration equipment (for soil stabilization), road widener, roller (all above subgrade), tractor with dozer and/or pusher, trencher, tugger-hoist, winch, winch cat.

POWER EQUIPMENT OPERATORS: HEAVY AND HIGHWAY CONSTRUCTION CONT'D.

Group III - A-frame truck, compressors (4 not to exceed 2000 C.F.M. combined capacity or 3 or less with more than 1200 C.F.M. but not to exceed 2000 C.F.M.), compressors (any size but subject to other provisions for compressors), dust collectors, generators, pumps, welding machines (4 of any type of combination), concrete pavement spreaders and finishers, conveyor, drill-core, drill-well, electric pumps used in conjunction with well point system, farm tractor with accessories, fine grade machine, fork lift (under 15 ft.), gunite machine, hammers (hydraulic-self-propelled), post hole digger and post driver, power sweeper, roller (grade and fill), submersible electric pump (when used in lieu of well point system), tractor with towed accessories, vibratory compactor, vibro tamp, well point.

Group IV - Aggregate plant, boiler (used in conjunction with production), cement and bin operator, compressors (3 or less not to exceed 1200 C.F.M. combined capacity), compressor (any size, but subject to other provisions for compressors) dust collectors, generator pumps, welding machines (3 or less of any type or combination), concrete paver or mixer (16S and under), concrete saw (self-propelled), fireman, form tamper, hydraulic pump (jacking system), lighting plants, mulching machine, oiler parapet- (concrete or pavement grinder), power broom (towed), power heaterman, revinius widener, shell winder, steam cleaner, tractor.

POWER EQUIPMENT OPERATORS: Rehabilitation work on residential structures over 4 stories defined to include demolition, alteration, and repair on any existi structure which is intended for predominantly residential use

GROUP 1: Oilers

GROUP 2: Firemen and heavy duty greasers, all boilers and steam generators

GROUP 3: Pumps, vibrators, concrete mixers, spreaders, concrete finishing machines, mortar mixers, air compressors, dust collectors, welding machine well points, two or more Herman Nelson and like heaters, batch and plant op., seed and mulching machines, generators, temporary light plants, concrete pump, beltcrete power pac (beltcrete system), electric submersibl pump 4" and over

GROUP 4: Dinkey locomotives, Barber Greene loaders, loaders and conveyors, tractors, scoopmobiles, bulldozers, road rollers, form fine graders, power brooms and sweepers

GROUP 5: Black top spreaders, black top rollers, high lifts, fork lifts, one drum hoist or hod hoists, post hole diggers, traxcavators, core and wel well drillers (one drum), economobile and similar type machines, elevators, A-L frame winches, power hoisting (single drum)

GROUP 6: LeTourneau graders or scrapers, trenching machines, push cart

GROUP 7: Tractor road pavers, cranes, power road graders, shovels, backhoes draglines, pile drivers, hoists two or more drums, three drum engines, hysters, two drum and swinging engines, three drum swinging engine, locomotive cranes, gradalls, hydrocrane, model CHB Vibrotamp or similar, Murphy type diesel generator-beltcrete system, side booms, hydro hammer, tractor mounted drill (quarry master), euclid loaders, concrete pumps, all CMI equipment, concrete central mix plant, automated asphalt, concrete central plant, derrick, whirlies, tower cranes, cableways, hydraulic cranes, power hoisting (2 drum and over), mucking machine

	Basic Hourly Rates*	Fringe Benefits Payments			
		H & W	Pensions	Vacation	App.
GROUP 1	$ 7.40	.95	1.05	n	.15
GROUP 2	7.45	.95	1.05	n	.15
GROUP 3	7.55	.95	1.05	n	.15
GROUP 4	7.71	.95	1.05	n	.15
GROUP 5	7.98	.95	1.05	n	.15
GROUP 6	8.10	.95	1.05	n	.15
GROUP 7	8.26	.95	1.05	n	.15

PAID HOLIDAYS:
A-New Year's Day; B-Memorial Day; C-Independence Day; D-Labor Day; E-Thanksgiv Day; F-Christmas Day.

FOOTNOTES:
n. Holidays: A through F.

DECISION NO. NY79-3018 Page 11

TRUCK DRIVERS: HEAVY AND HIGHWAY CONSTRUCTION	Basic Hourly Rates	Fringe Benefits Payments			
		H & W	Pensions	Vacation	Education and/or Appr. Tr.
CLASS 1	9.13	1.01	.75	o	
CLASS 2	9.18	1.01	.75	o	
CLASS 3	9.23	1.01	.75	o	
CLASS 4	9.38	1.01	.75	o	
CLASS 5	9.53	1.01	.75	o	
PAID HOLIDAYS: A-New Year's Day; B-Memorial Day; C-Independence Day; D-Labor Day; E-Thanksgiving Day; F-Christmas Day.					

FOOTNOTE:
o. Paid Holidays: A through F, provided the employee has worked the working day before and after the holiday.

TRUCK DRIVERS: HEAVY AND HIGHWAY CONSTRUCTION:

CLASS 1
Warehouseman, yardmen, truck helpers, pickups, panel trucks, flatboy material trucks (straight jobs), single axle dump trucks, dumpsters, material checkers and receivers, greasers, truck firemen, mechanic helpers and parts chaser.

CLASS 2
Tandems, batch trucks, mechanics and dispatcher.

CLASS 3
Semi-trailers, low-boy trucks, asphalt distributors trucks, agitator, mixer trucks and dumpcrete type vehicles, truck mechanic.

CLASS 4
Specialized earth moving equipment - euclid type or similar off-highway equipment, where not self loaded, and straddle (ross) carrier.

CLASS 5
Off-highway tandem back-dump, twin engine equipment and double hitched equipment where not self loaded.

NEW DECISION

STATE: Texas COUNTIES: Bastrop, Blanco, Caldwell, Hays, Lee, Llano, Travis & Williamson

DECISION NO.: TX79-4068 DATE: Date of Publication

DESCRIPTION OF WORK: Residential Projects consisting of single family homes and garden type apartments up to and including 4 stories.

	Basic Hourly Rates	Fringe Benefits Payments			
		H & W	Pensions	Vacation	Educat and/o Appr.
AIR CONDITIONING MECHANICS	$ 5.25				
BRICKLAYERS	7.04				
CARPENTERS	6.00				
CEMENT MASONS	4.81				
ELECTRICIANS	6.50				
LABORERS:					
Laborers	3.42				
Pipelayers	3.75				
PAINTERS	4.25				
PLUMBERS	7.50				
ROOFERS	4.25				
SOFT FLOOR LAYERS					
TRUCK DRIVERS	4.25				
POWER EQUIPMENT OPERATORS:					
Backhoes	4.00				
Bulldozers	3.75				
Front end loaders	3.50				
Motor graders	5.75				
Scrapers	5.75				
WELDERS - receive rate prescribed for craft performing operation to which welding is incidental.					

MODIFICATIONS P. 1

Decision #AL79-1080 - Mod. #1 (44 FR 26411- May 4, 1979) Calhoun, Etowah, Green, Jefferson, Pickens, St. Clair, Shelby, Sumter, Talledega, Tuscaloosa and Walker Counties, Alabama	Basic Hourly Rates	Fringe Benefits Payments			
		H & W	Pensions	Vacation	Education and/or Appr. Tr.
Change:					
Power Equipment Operators:					
Class A	10.29	.50	.40		.10
Class B	9.66	.50	.40		.10
Class C	9.18	.50	.40		.10
Class D	8.47	.50	.40		.10
DECISION NO. DC78-3098 - Mod. # 9 (43 FR 58723 - December 15, 1978) District of Columbia; Maryland-Montgomery & Prince George's Counties, and D. C. Training School; Virginia - Independent City of Alexandria & Arlington					
Change:					
HEAVY CONSTRUCTION EXCLUDING WATER AND SEWER LINES: All Counties					
BUILDING CONSTRUCTION: Excluding Alexandria, Virginia					
Glaziers	$11.78	#1	.60		
Terrazzo and Mosaic Workers	12.25	.70	.95		.04
HEAVY CONSTRUCTION EXCLUDING WATER AND SEWER LINES:					
BUILDING CONSTRUCTION:					
POWER EQUIPMENT OPERATORS:					
GROUP I	12.46	.70	.65		.12
GROUP II	12.19	.70	.65		.12
GROUP III	12.03	.70	.65		.12
GROUP IV	11.84	.70	.65		.12
GROUP V	11.79	.70	.65		.12
GROUP VI	11.77	.70	.65		.12
GROUP VII	11.76	.70	.65		.12
GROUP VIII	11.57	.70	.65		.12
GROUP IX	11.55	.70	.65		.12
GROUP X	11.34	.70	.65		.12
GROUP XI	10.82	.70	.65		.12
GROUP XII	10.63	.70	.65		.12
GROUP XIII	8.85	.70	.65		.12

MODIFICATIONS P. 2

DECISION NO. GA79-1014 - Mod. #2 (44 FR 1632 - January 5, 1979) Clayton, DeKalb, & Fulton Counties, Georgia	Basic Hourly Rates	Fringe Benefits Payments			
		H & W	Pensions	Vacation	Edu an Apr
CHANGE:					
Glaziers	$ 9.40	.70	.48	.80	
Marble, Tile, & Terrazzo Finishers	7.00				
DECISION NO. GA78-1088 - Mod. #4 (43 FR 47426 - October 13, 1978) Chatham County, Georgia					
CHANGE:					
Bricklayers, Stone masons, Marble masons, Tile setters, & Terrazzo workers	9.55	.40	.45		
Carpenters & Soft floor layers	9.70	.55			
Electricians:					
Wiremen	10.55	.60	3% + .75		1/5
Cable splicers	10.80	.60	3% + .75		1/5
Laborers:					
General laborers, traffic flagmen, track spotters;	5.57	.15	.13		
Operators of jackhammer, tamp, paving breaker, chipping hammer, spade, chain saw, vibrator, motorized buggy, mason tender, terrazzo helper, railroad or track laborers, walk behind compactor or roller plasterer, and carpenter tender;	5.72	.15	.13		
Mortar mixers (hand or machine), pipelayers, (harner, potman, etc,), flagmen, (cranes, derricks, etc.);	5.82	.15	.13		
Burner (torch) on demolition work, track or wagon drills used in blasting;	6.07	.15	.13		
Powderman or blaster.	6.57	.15	.13		
Millwrights	10.30	.55			
Piledrivermen	9.95	.55			
Sheet metal workers	10.23	.45			

MODIFICATIONS P. 3

DECISION NO. GA78-1089 - Mod. #5
(43 FR 47427 - October 13, 1978)
Richmond County, Georgia

CHANGE:

	Basic Hourly Rates	Fringe Benefits Payments			
		H & W	Pensions	Vacation	Education and/or Appr. Tr.
Bricklayers, Stone masons, Marble masons, Tile setters, Terrazzo workers, & Plasterers	$ 9.40				
Cement masons	9.00				
Electricians:					
Wiremen	10.41	.50	3% + .30		½ of 1%
Cable splicers	10.66	.50	3% + .30		½ of 1%
Laborers:					
Building & Construction laborers;	5.60	.20			.10
Power & air tool operators, concrete or clay pipe layers & wipers, mortar mixers, & power buggy operators;	5.75	.20			.10
Powderman, wagon drill operators, tool room tenders, tunnel laborers, shaft laborers, burners, acetylene (demolition work), slip form workers (steel or wood, screw or jack type), potman, creosote materials handler, steel form setter (on grade), chimney or stack workers.	5.80	.20			.10
Line Construction:					
Linemen & Heavy equipment operators (cranes, draglines, & 5th wheel tractors);	10.41	.50	3% + .30		½ of 1%
Cable splicers;	10.66	.50	3% + .30		½ of 1%
Equipment operators (hole digging equipment, tractor with winch & derrick, anchor machine, backhoes, & ground rod drivers);	8.54	.50	3% + .30		½ of 1%
Truck operators	6.45	.50	3% + .30		½ of 1%
Groundmen	5.83	.50	3% + .30		½ of 1%

MODIFICATIONS P. 4

DECISION NO. IL79-2039 - MOD #2
(44 FR 34704 - June 15, 1979)
Boone, Carroll, DeKalb, Jo-Daviess, Lee, Ogle, Stephenson, Whiteside & Winnebago Counties, Illinois

	Basic Hourly Rates	Fringe Benefits Payments			
		H & W	Pensions	Vacation	Education and/or Appr. Tr.
OMIT:					
ASBESTOS WORKERS:					
Boone, Ogle, Stephenson & Winnebago Counties	$12.90	.85	.90		.07
CEMENT MASONS:					
Boone & Winnebago Counties	11.78	.55	1.00		
ELECTRICIANS:					
Boone, DeKalb, Winnebago, Stephenson, Ogle, Lee, Jo-Daviess (Warren, Rush, Nora, Stockton, Wards, Grove, Pleasant Valley, Berrenman Twps.); Carroll Co.: (Cherry Grove, Shannon, Rock Creek, Lima, Wysox, Elkhorn, Grove Twps.); Whiteside Co: (Genesee, Jordan, Hopkins, Sterling, Hume, Montgomery, Tampico, Hahnaman Twps.)	12.96	.50	3%+.80		1%
PLASTERERS:					
Boone & Winnebago Counties	11.23	.55	1.00		

DECISION NO. IL78-2126 - MOD 03
(43 FR 50314 - October 27, 1978)
Boone, Carroll, DeKalb, Jo-Daviess, Lee, Ogle, Stephenson, Whiteside & Winnebago Counties, Illinois

ADD:					
ASBESTOS WORKERS:					
Boone, Ogle, Stephenson & Winnebago Counties	$12.90	.85	.90		.07
CEMENT MASONS:					
Boone & Winnebago Counties	11.78	.55	1.00		
ELECTRICIANS:					
Boone, DeKlab, Winnebago, Stephenson, Ogle, Lee, Jo-Daviess (Warren, Rush, Nora, Stockton, Wards, Grove, Pleasant Valley, Berrenman Twps.); Carroll Co.: (Cherry Grove, Shannon, Rock Creek, Lima, Wysox, Elkhorn, Grove Twps.); Whiteside Co: (Genesee, Jordan, Hopkins, Sterling, Hume, Montgomery, Tampico, Hahnaman Twps.)	$12.96	.50	3%+.80		1%
PLASTERERS:					
Boone & Winnebago Counties	11.23	.55	1.00		

MODIFICATIONS P. 5

DECISION #NY79-3011 - Mod. #1
(44 FR 29249- May 18, 1979)
Bronx, Kings, Queens, New York,
& Richmond Counties, New York

	Basic Hourly Rates	Fringe Benefits Payments			
		H & W	Pensions	Vacation	Education and/or Appr. Tr.
Change:					
Divers	14.82	1.725	1.78	1.03	.05
Diver Tenders	11.43	1.725	1.78	1.03	.05
Electricians and Linemen	13.45	7%	3%+a	6%+b	½%
Glaziers	12.85	.66	1.91	.67	.01
Laborers:					
Cement Concrete Workers	10.40	1.4025	1.7525	i	
Mason Tenders	10.35	.887	1.595		
Blasters (Heavy)	13.85	1.07	1.79		
Concrete Breakers, Chippers, Jackhammer, Pneumatic Tools, Spades (Heavy)	12.21	1.07	1.79		
Drill Runner, Air Trac, Wagon Drills, (Heavy) Quarrybar	12.47	1.07	1.79		
Powder Carriers (Heavy)	11.22	1.07	1.79		
Magazine Keeper (Heavy)	6.94	1.07	1.79		
Nippers	10.68	1.07	1.79		
Curb Setters (Highway)	12.94	1.30	1.30	h	
Pavers (Highway)	12.94	1.30	1.30	h	
Rammers (Highway)	12.53	1.30	1.30	h	
Demolition:					
Barmen	10.90	8%	10%		
Barmen Helpers	10.60	8%	10%		
Plumbers					
NY, Bronx	12.12	4.70+j			
Kings, Queens	11.70	4.79+j			
Sprinkler Fitter and Steamfitters	12.83	2.75	1.12	1.00	.07
Add:					
FOOTNOTE:					
q. Employer contributes $5.00 per day to an Annuity Fund.					

MODIFICATIONS P. 6

DECISION NO. OH78-2148 - MOD #2
(43 FR 52658 - November 13, 1978)
Mahoning & Trumbull Counties,
Ohio

	Basic Hourly Rates	Fringe Benefits Payments			
		H & W	Pensions	Vacation	Education and/or Appr. Tr.
CHANGE:					
ASBESTOS WORKERS	$13.74	.55	1.25		.02
ELECTRICIANS:					
Mahoning (Smith Twp.) Co.:					
Commercial Building	13.35	.55	3%+.60		.3%
Residential (4 units only)	8.95	.50	3%+.40		.3%
IRONWORKERS:					
Ornamental; Reinforcing & Structural	13.00	.75	1.30		.09
LINE CONSTRUCTION:					
Mahoning Co. (Smith Twp.):					
Linemen; Cable Splicer	13.35	.55	3%+.60		.3%
Line Equipment Oprs.	11.60	.55	3%+.60		.3%
OMIT:					
LABORERS					
ADD:					
LABORERS:					
Asphalt Paving; Building & Construction Laborers; Carpenter Tenders & Railroad Construction Laborers	$10.68	.80	.80		.10
All Machine Driven Tools, Electric, Gas or Air & Operation of all Pumps under 4"; All Men Working in Concrete such as Pouring, Puddling, Raking & Conveying; All Scaffold Help; Jackhammer Operator; Mason Tender; Mortar Mixer (Hand or Machine); Scrap Iron Burning & Spikers	10.80	.80	.80		.10
All work done by Laborers 7 ft. or more in depth	10.87	.80	.80		.10
Laborers (except Jackhammer) working on repair of Blast Furnaces or Coke Plant & Auxiliary Facilities	10.98	.80	.80		.10
Jackhammer Operator in Trench or Shaft 7 ft. or more; Jackhammer on Blast Furnace or Coke Plant; Laser Beam Operator; Muckers; Pipelayers; Powder and Dynamite; & Tunnel and Caisson	$11.00	.80	.80		.10
Ram Tight	11.05	.80	.80		.10
Gunniting & Sandblasting; Miner Air Tool; Pump Crete Operations; & Wrench Man	11.08	.80	.80		.10
Lancing	11.18	.80	.80		.10
Bellman; Hook Up Man	11.28	.80	.80		.10

MODIFICATIONS P. 7

DECISION NO. OH79-2047 - MOD #4
(44 FR 27889 - May 11, 1979)
Adams, Brown, Butler, Champaign, Clark, Clermont, Clinton, Darke, Delaware, Fairfield, Fayette, Franklin, Gallia, Geauga, Greene, Hamilton, Highland, Lawrence, Licking, Madison, Meigs, Miami, Montgomery, Muskingum, Perry, Pickaway, Pike, Preble, Ross, Scioto, Shelby, Union and Warren Counties, Ohio

	Basic Hourly Rates	Fringe Benefits Payments			
		H & W	Pensions	Vacation	Education and/or Appr. Tr.
CHANGE:					
BRICKLAYERS; CAULKERS; CLEANERS; Marble Setters; Pointers; Stonemasons; Terrazzo Workers & Tile Setters:					
Fayette, Pike & Ross Cos.: Bricklayers; Caulkers; Cleaners; Pointers & Stonemasons	$12.86		.50		.05
Geauga County	14.32	.70	1.00		75.00p/yr.
CARPENTERS; MILLWRIGHTS; Piledrivermen & Soft Floor Layers:					
Brown, Butler, Clermont, Clinton, Hamilton & Warren Cos.: Carpenters; Piledriverman	12.85	.75	.85		.075
Darke, Greene, Miami, Montgomery, Preble & Shelby Cos.: Millwrights	11.36	.90	1.25		.07
ELECTRICIANS:					
Geauga Co. (Bainbridge, Chester & Russell Twps.)	14.62	.90	.51		.03
IRONWORKERS:					
Champaign (Rem. of Co.), Clark (E. ½), Fayette (Part), Highland (E. 1/5), Muskingum, Perry, Pike (Part) & Ross Cos.	12.35	1.00	2.20		.05
Delaware, Fairfield, Licking, Madison, Pickaway & Union Cos.	12.25	1.00	2.20		.05
Franklin Co.	12.10	1.00	2.20		.05
LATHERS:					
Clermont, Hamilton, Highland & Warren (S. ½) Cos.	14.02		.35		.025

MODIFICATIONS P. 8

DECISION NO. OH79-2047 (Cont'd)

	Basic Hourly Rates	Fringe Benefits Payments			
		H & W	Pensions	Vacation	Education and/or Appr. Tr.
CHANGE:					
PLASTERERS:					
Geauga County	$14.32	.70	1.00		75.00p/yr
PLUMBERS; STEAMFITTERS:					
Butler Co. (N. ½)	14.10	.90	1.00		.05
Champaign, Clark, Greene (Twps. of Cedarville, Ross, Jefferson Ceasar Creek & New Jasper) & Madison (W. of Rte. #38 incl. city of London) Cos.	13.30	.83	.85		.04
LABORERS:					
Geauga Co.:					
Laborers; Equipment Replacing Wheelbarrow & Concrete Buggy	11.53	1.46	1.55		
Power Driven Tools & Vibrators; Sewer & Utilities Laborers; Fine Brick Tenders	11.68	1.46	1.55		
Jackhammer; Acetylene Burner Mucker	11.73	1.46	1.55		
Swinging Scaffold; Mason Tender Handling Carbon Block & Bottom Block Material; Air Track & Wagon Drill	11.78	1.46	1.55		
Acid Brick Tenders; Gunnite Op.; Blasters & Shooters; Caisson; Well; Cylinder; Cofferdams; Mine Workers w/o Air	12.01	1.46	1.55		
Topman on free standing radial stack	12.18	1.46	1.55		
TRUCK DRIVERS:					
Clinton, Darke, Greene, Miami, Montgomery & Preble Cos.:					
Straight Flat & Dump Truck; Winch Truck	7.68	27.50a	11.00a	c&e	
Ready Mix Dump Crete	7.74	27.50a	11.00a	c&e	
Tandem Truck & Tractor Trailer Combination	7.79	27.50a	11.00a	c&e	
Euclid to 12 yds	7.85	27.50a	11.00a	c&e	
Euclid over 12 yds.	8.21	27.50a	11.00a	c&e	
ADD:					
GLAZIERS:					
Shelby (Northern Part) Co.	9.70		.70		

MODIFICATIONS P. 9

DECISION NO. OH79-2048 - MOD #3
(44 FR 27901 - May 11, 1979)
Ashtabula, Cuyahoga, Lake, Lorain, Portage, Stark & Summit Counties, Ohio

	Basic Hourly Rates	Fringe Benefits Payments			
		H & W	Pensions	Vacation	Education and/or Appr. Tr.
CHANGE:					
ASBESTOS WORKERS:					
Ashtabula (Rem. of Co.)	$13.74	.55	1.25		.02
BRICKLAYERS; STONEMASONS:					
Ashtabula Co.	12.92	.95	1.00		
Cuyahoga Co.	13.66	1.15	1.33		.04
Lake Co.	14.32	.70	1.00		75.00p/yr.
CEMENT MASONS:					
Ashtabula Co.	12.92	.95	1.00		
Lake Co.	14.32	.70	1.00		75.00p/yr.
ELECTRICIANS:					
Cuyahoga & Lorain (Twp. of Columbia) Cos.	14.62	.90	3%+.51		.03
Lake Co.:					
Residential Construction	7.35	.70	3%		1%
Lorain (Except Columbia Twp.):					
Commercial Construction	13.50	.75	3%+1.00		.1%
IRONWORKERS:					
Portage (Ravenna Ordnance Depot) Co.:					
Ornamental; Reinforcing & Structural	13.00	.75	1.30		.09
LATHERS:					
Lorain (Rem. of Co.)	14.30				.01
LINE CONSTRUCTION:					
Lorain (Rem. of Co.) Co.:					
Cable Splicers; Equipment Ops.; & Linemen	13.50	.75	3%+1.00		½%
MARBLE SETTERS:					
Ashtabula Co.	12.92	.95	1.00		
Cuyahoga Co.	13.66	1.15	1.33		.04
Lake Co.	14.32	.70	1.00		75.00p/yr.
PLASTERERS:					
Ashtabula Co.	12.92	.95	1.00		
Cuyahoga Co.	16.24				.01
Lake Co.	14.32	.70	1.00		75.00p/yr.
TERRAZZO WORKERS:					
Ashtabula Co.	12.92	.95	1.00		
Cuyahoga Co.	13.66	1.15	1.33		.04
Lake Co.	14.32	.70	1.00		75.00p/yr.

MODIFICATIONS P. 10

DECISION NO. OH79-2048 (Cont'd)

	Basic Hourly Rates	Fringe Benefits Payments			
		H & W	Pensions	Vacation	Education and/or Appr. Tr.
CHANGE:					
TILE SETTERS:					
Ashtabula Co.	$12.92	.95	1.00		
Cuyahoga Co.	13.905		1.75		
Lake Co.	14.32	.70	1.00		75.00p/yr.
LABORERS (Cuyahoga County):					
Construction	11.53	1.46	1.55		
Sewer & Utility; Power Driven Tools & Vibrators	11.68	1.46	1.55		
Jackhammer; Acetylene Burners; Muckers	11.73	1.46	1.55		
Swinging Scaffolds	11.78	1.46	1.55		
Acid Brick Tenders; Gunnite Ops.; Blasters; Shooters; Caisson; Well Cylinders; Mine Workers w/o Air & Cofferdams	12.01	1.46	1.55		
Topman on free standing radial stack	12.18	1.46	1.55		

MODIFICATIONS P. 11

	Basic Hourly Rates	Fringe Benefits Payments			
		H & W	Pensions	Vacation	Education and/or Appr. Tr.
DECISION NO. PA78-3016 - Mod. #8 (43 FR 16106 - April 14, 1978) Lehigh County, Pennsylvania					
Change:					
Bricklayers & Stonemasons	10.90	1.00	1.15		.01
Electricians	12.50	7%	3%+1.00		.02
Lathers	11.11	.65	.35		.01
Piledrivermen	11.52	2.48	1.40		.13
Plumbers	12.73	.85	1.40		.14
Sheet Metal Workers	11.06	1.42	1.18		.14
Steamfitters	12.76	.80	1.45		.11
DECISON NO. PA78-3044 - Mod. #9 (43 FR 20711 - May 12, 1978) Luzerne County, Pennsylvania					
Change:					
Asbestos Workers	12.025	.65	.60		.01
Bricklayers & Stonemasons:					
Nesopeck, Hallenback and Salem Twps.	10.59	.59	.70		.01
Remainder of County	11.15	.85	.75		
Electricians					
Hazleton:					
Commercial	11.87	.65	3%+.30	a	b
Ironworkers:					
Structural & Ornamental	12.80	e			.10
Reinforcing	12.70	e			.10
FOOTNOTE:					
e. Employer contributes $2.60 to a combined Health and Welfare and Pension Fund.					
Marble Setters:					
Remainder of County	10.75		.75		
Piledrivermen	11.52	2.48	1.40		.13
Plumbers and Steamfitters:					
Wilkes Barre	11.89	.80	1.25		.05
DECISION No. PA78-3045 - Mod. #10 (43 FR 20714 - May 12, 1978) Lackawanna, Susquehanna, Wayne, and Wyoming Counties, Pennsylvania					
Change:					
Asbestos Workers	12.025	.65	.60		.01
Glaziers	10.50	.65	.85		
Ironworkers:					
Lackawanna, Wayne, and Wyoming Cos.:					
Structural & Ornamental	12.80	e			.10
Reinforcing	12.70	e			.10
FOOTNOTE:					
e. Employer contributes $2.60 to a combined Health and Welfare and Pension Fund.					

MODIFICATIONS P. 12

	Basic Hourly Rates	Fringe Benefits Payments			
		H & W	Pensions	Vacation	Education and/or Appr. Tr.
DECISION NO. PA78-3064 - Mod. #6 (43 FR 43224 - September 22, 1978) Schuylkill County, Pennsylvania					
Change:					
Electricians:					
North Union, East Union, West Mahony, (excluding Frackville Borough), Mahony Delano, Kline, Rush, Ryan, Blythe, Schuylkill, Walker, Rahn, East Brunswick and West Penn. Twps.	11.87	.65	3%+.30	f	g
Ironworkers	12.40	1.14	1.36		.02
Painters:					
Remainder of County					
Commercial and Industrial					
Brush	9.75	.75	.80		
Steel	10.80	.75	.80		
Spray	10.80	.75	.80		
Piledrivermen	11.52	2.48	1.40		.13
Tile Setters	9.20	.70	1.25		
DECISION NO. PA78-3065 - Mod. #6 (43 FR 43226 - September 22, 1978) Sullivan County, Pennsylvania					
Change:					
Asbestos Workers	12.025	.65	.60		.01
Bricklayers	10.59	.55	.70		.01
Glaziers	10.50	.65	.85		
Ironworkers:					
Structural	12.80	a			.10
Reinforcing	12.70	a			.10
FOOTNOTE:					
a. Employer contributes $2.60 per hour to a combined health and welfare fund.					
Plumbers	11.45	.79	.70	.75	.05
Steamfitters	11.45	.79	.70	.75	.05
Stonemasons	10.59	.55	.70		.01
DECISION NO. PA78-3067 - Mod. #6 (43 FR 43232 - September 22, 1978) Adams & York Counties, Pennsylvania					
Change:					
Electricians	11.60	.65	3%+.15		.01
Ironworkers	12.505	1.24	1.36		.03
Piledrivermen	11.52	2.48	1.40		.13
Sheet Metal Workers	11.06	1.42	1.18		.14

MODIFICATIONS P. 13

DECISION #PA78-3066- Mod. #9
(43 FR 43228 September 22, 1978)
Columbia, Montour, Snyder Counties, Pennsylvania

Change:	Basic Hourly Rates	Fringe Benefits Payments			
		H & W	Pensions	Vacation	Education and/or Appr. Tr.
Asbestos Workers					
Zone 1	12.025	.65	.60		.01
Bricklayers & Stonemasons					
Zone II	10.59	.55	.70		.01
Cement Masons					
Zone II	10.00	.55	.70		.01
Electricians					
Zone II	11.87	.65	3%+.30	a	.12
Glaziers					
Zone II	10.14	.55	.60		.01
Ironworkers					
Zone I	12.505	1.24	1.36		.03
Zone II					
Structural & Ornamental	12.80	b			.10
Reinforcing	12.70	b			.10
FOOTNOTE:					
b. Employer contributes $2.60 to a combined Health & Welfare Fund					
Laborers:					
Zone II					
Class I	7.60	.55	.50		
Class II	7.75	.55	.50		
Zone III					
Class I	8.15	.45	.55		
Class II	8.62	.45	.55		
Class III	7.55	.45	.55		
LABORERS CLASSIFICATION DEFINITION					
Class I					
Class II					
Class III					
Piledrivermen	11.52	2.48	1.40	a	.13
Plasterers					
Zone I	10.00	.55	.70		.01
DECISION NO. PA78-3068 - Mod #7					
(43 FR 45160 - September 29, 1978)					
Lebanon County, Pennsylvania					
Change:					
Ironworkers	12.505	1.24	1.36		.03
Painters (East to Rte 72)					
Brush	9.75	.75	.80		
Structural Steel and Spray	10.80	.75	.80		
Highway Bridges	11.20	.75	.80		
Plumbers & Steamfitters:					
East of Rte - 501	12.73	.85	1.40		.14
Piledrivermen	11.52	2.48	1.30		.13

MODIFICATIONS P. 14

DECISION NO. PA78-3069 - Mod. #6
(43 FR 46475 - October 6, 1978)
Berks County, Pennsylvania

Change:	Basic Hourly Rates	Fringe Benefits Payments			
		H & W	Pensions	Vacation	Education and/or Appr. Tr.
Bricklayers & Stonemasons	10.10	.85	.85		
Ironworkers:					
Structural, Ornamental and Reinforcing	12.40	1.14	1.36		.02
Painters:					
Brush	9.75	.75	.80		
Bridge, tower, stacks, & tanks	11.20	.75	.80		
Spray & Steel	10.80	.75	.80		
Piledrivermen	11.52	2.48	1.40		.13
Plumbers	12.73	.85	1.40		.14
Roofers:					
Albany, Maxstany and Windsor Composition and Slate	12.03		1.30		
Sheet Metal Workers	11.06	1.42	1.18		.14
Steamfitters	12.76	.80	1.45		.11
DECISION NO. PA78-3070 - Mod. #6					
(43 FR 45162 - September 29, 1978)					
Lancaster County, Pennsylvania					
Change:					
Ironworkers	12.505	1.24	1.36		.03
Painters:					
Remainder of County					
Brush	9.75	.75	.80		
Steel	10.80	.75	.80		
Spray	10.80	.75	.80		
Roller	9.75	.75	.80		
Piledrivermen	11.52	2.48	1.40		.13
Sheet Metal Workers	11.06	1.42	1.18		.14
DECISION NO. PA78-3099 - Mod. #7					
(43 FR 58729 - December 15, 1978)					
Bradford, Tioga, Union Counties, Pennsylvania					
Change:					
Asbestos Workers	12.025	.65	.60		.01
Glaziers					
Zone 1	10.50	.65	.85		
Ironworkers:					
Structural, Ornamental & Reinforcing					
Zone 1	12.505	1.24	1.36		.03
Piledrivermen	11.52	2.48	1.40		.13
Plumbers & Steamfitters					
Zone 1	11.45	.79	.70	.75	.05

MODIFICATIONS P. 15

DECISION NO. PA79-3000 - Mod. #4
(44 FR 5625 - January 25, 1979)
Butler, Cambria, Erie, Fyette, Mercer, Washington, Westmoreland, Lawrence, Somerset, Allegheny, Beaver, Armstrong, Blair, Cameron, Centre, Clarion, Clearfield, Crawford, Forest, Greene, Indiana, McKean, Venango, Warren, Bedford, Jefferson, Clinton, Elk, Franklin, Fulton, Huntingdon, Mifflin & Potter Counties, Pennsylvania

Change:	Basic Hourly Rates	Fringe Benefits Payments			
		H & W	Pensions	Vacation	Education and/or Appr. Tr.
Ironworkers:					
Structural, Ornamental & Reinforcing Zone 2	12.505	1,24	1.36		.03

DECISION NO. PA79-3001 - Mod #2
(44 FR 6886 - February 2, 1979)
Northampton County, Pennsylvania

Change:	Basic Hourly Rates	Fringe Benefits Payments			
		H & W	Pensions	Vacation	Education and/or Appr. Tr.
Bricklayers & Stonemasons	11.69	.60	.66		.01
Cement Masons	11.39	.60	.66		.01
Electricians	12.50	7%	3%+1.00		.02
Lathers	11.11	.65	.35		.01
Line Construction:					
Linemen	13.86	.45	3%		3/8 of 1%
Cable Splicers	13.86	.45	3%		3/8 of 1%
Groundmen	8.32	.45	3%		3/8 of 1%
Winch Truck Driver	9.70	.45	3%		3/8 of 1%
Piledrivermen	11.52	2.48	1.40		.13
Plasterers	11.28	.60	.66		.01
Plumbers	12.73	.85	1.40		.14
Steamfitters	12.76	.80	1.45		.11
Sheet Metal Workers	11.06	1.42	1.18		.14
Roofers:					
Composition, Slate, & Tile	12.03		1.30		
Helpers	7.21		1.30		
Terrazzo Workers	10.59	.60	.66		.01

DECISION NO. PA79-3004 - Mod. #4
(44 FR 16319 - March 16, 1979)
Northumberland County, Pennsylvania

Change:	Basic Hourly Rates	Fringe Benefits Payments			
		H & W	Pensions	Vacation	Education and/or Appr. Tr.
Asbestos Workers	12.025	.65	.60		.01
Glaziers	10.14	.55	.60		.01
Ironworkers	12.505	1.24	1.36		.03
Laborers					
North of Susquehanna River	7.60	.55	.50		
Piledrivermen	11.52	2.48	1.40		.13

MODIFICATIONS P. 16

DECISION NO. PA79-3005 - Mod. #3
(44 FR 16320 - March 16, 1979)
Lycoming County, Pennsylvania

Change:	Basic Hourly Rates	Fringe Benefits Payments			
		H & W	Pensions	Vacation	Education and/or Appr. Tr.
Asbestos Workers	12.025	.65	.60		.01
Ironworkers	12.505	1.24	1.36		.03
Laborers:					
Unskilled laborers, scaffold builders, wrecking, window cleaners & demolition	7.60	.55	.50		
Masons tenders, operators of jackhammers, paving breakers vibrators & other pneumatic & mechanical tools coming under the jurisdiction of laborers, wagon drill operators, excavating for caisson, under pinning & pier holes (below 12"), non-metallic pipe layers, plasterer tenders, mortar men (mixed by hand), handling & using cutting or burning torches in the wrecking of buildings	7.75	.55	.50		
Piledrivermen	11.52	2.48	1.40		.13
Plumber	11.45	.79	.70	.75	.05
Steamfitters	11.45	.79	.70	.75	.05

DECISION NO. PA79-3006 - Mod. #3
(44 FR 19099 - March 30, 1979)
Franklin County, Pennsylvania

Change:	Basic Hourly Rates	Fringe Benefits Payments			
		H & W	Pensions	Vacation	Education and/or Appr. Tr.
Ironworkers	12.505	1.24	1.36		.03
Sheet Metal Workers	11.06	1.42	1.18		.14

DECISION NO. PA79-3007 - Mod. #3
(44 FR 20932 - April 6, 1979)
Clinton, Centre, Huntingdon, Fulton, & Mifflin Counties, Pennsylvania

Change:	Basic Hourly Rates	Fringe Benefits Payments			
		H & W	Pensions	Vacation	Education and/or Appr. Tr.
Asbestos Workers Zone 1	12.025	.65	.60		.01
Ironworkers - Zone 2	12.505	1.24	1.36		.03
Plumbers & Steamfitters Zone 1	11.45	.79	.70	.75	.05
Sheet Metal Workers - Zone 2	11.06	1.42	1.18		.14

MODIFICATIONS P. 17

DECISION NO. PA79-3008 - Mod. #3
(44 FR 25124 - April 27, 1979)
Cumberland, Dauphin, Perry, Juniata, New Cumberland Depot in York County, Pennsylvania

Change:	Basic Hourly Rates	Fringe Benefits Payments			
		H & W	Pensions	Vacation	Education and/or Appr. Tr.
Ironworkers	12.505	1.24	1.36		.03
Glaziers	10.14	.55	.60		.01
Marble Setters	10.80	.60	.57		
Piledrivermen	11.52	2.48	1.40		.13
Terrazzo Workers & Tile Setters	9.55	.60	.57		

DECISION NO. PA79-3012 - Mod #1
(44 FR 29253 May 18, 1979)
Adams, Berks, Bradford, Carbon, Columbia, Cumberland, Dauphin, Juniata, Lackawanna, Lancaster, Lebanon, Lehigh, Luzerne, Lycoming, Monroe, Montour, Nothampton, Northumberland, Perry, Pike, Schuylkill, Snyder, Sullivan, Susquehanna, Tioga, Union, Wayne, Wyoming, & York Counties, Pennsylvania

Change:					
Ironworkers:					
Structural, Ornamental & Reinforcing:					
Adams, Cumberland, Dauphin, Lancaster, Lebanon, Lycoming, Montour, Northumberland, Juniata, Perry, Snyder, Union & York Cos., Pennsylvania	12.505	1.24	1.36		.03

SUPERSEDEAS DECISION

STATE: Illinois, Indiana, Michigan, Minnesota, New York, Ohio, Pennsylvania and Wisconsin
DECISION NUMBER: IL79-2062
Supersedes Decision No. IL78-2071 dated September 1, 1978 on 43 FR 39260
DESCRIPTION OF WORK: Dredging on the Great Lakes, their connecting and tributory waters, including the Illinois Waterway to the lock at Lockport, Illinois; and in the New York State Barge Canal System between Tonawanda, New York, and Waterford, New York, and Oswego, New York and on the St. Lawrence River Eastward to the International Boundary near St. Regis, New York

	Basic Hourly Rates	Fringe Benefits Payments			
		H & W	Pensions	Vacation	Education and/or Appr. Tr.
DIPPER & HYDRAULIC DREDGING:					
Chief Engineer	$15.43	.63	.50	a	
Operators	15.31	.63	.50	a	
Assistant Engineer	14.79	.63	.50	a	
Welder	14.67	.63	.50	a	
Cranemen - Dipper Dredging	14.67	.63	.50	a	
Spill Barge Operator - Hydraulic Dredging	14.67	.63	.50	a	
DRILL BOATS:					
Engineers	11.37	.73	.60	c	
Blasters	11.51	.73	.60	c	
Firemen	10.97	.73	.60	c	
Drillers, Welders or Machinists	11.38	.73	.60	c	
Oilers	10.76	.73	.60	c	
TUG ENGINEERS	13.79		.75	a	
TUG OPERATORS - ON LAUNCH	13.40		.75	a	
FLOATING EQUIPMENT: (Clamshell, Dragline and Marine Construction)					
Engineers and Operators	15.65	f		d&e	
Equipment Operators	14.05	f		d&e	
Firemen	13.25	f		d&e	
Oilers	11.65	f		d&e	
TUG WORKERS:					
Firemen, Linesmen, Oilers, Deckhands, Scowmen (on/or with Tugboats, Launches or other Selfpropelled Boats)	12.30	b	.75	.75+d	
DREDGE WORKERS:					
Firemen, Oiler, Deckhands and Scowmen (with Dipper Dredges, Hydraulic Dredges or other Floating Equipment engaged in Dredging Operations); Pipeline Men (both afloat and ashore, including loading, unloading, installing, maintaining and handling pipe lines for Hydraulic Dredges and Sandboats)	12.30	b	.75	.75+d	
Range and Sweepmen, Service Truck Drivers	9.42	b	.75	.75+d	

DECISION NO. IL79-2062

FOOTNOTES:

a. 8 paid holidays: A through F plus Washington's Birthday and Veterans' Day; 6½ days vacation with pay for 104 days of service, one additional day of vacation with pay for each of the next 3 periods of 26 days of service, and for 208 days or over of service 13 days of vacation with pay, all in one calendar year. Employees not qualifiying for vacation, as set forth above, will receive one day's vacation with pay for each full 24 days of service in one calendar year.

b. $7.20 per day, per employee.

c. 8 paid holidays: A through F plus Washington's Birthday and Veterans' Day; 6½ days vacation with pay for 84 days of service, one additional day of vacation with pay for each additional 21 2/3 days of service, all in one calendar year. Employees not qualifying for vacation, as set forth above, are to receive one day's vacation with pay for each full 20 days of service in one calendar year.

d. 8 paid holidays: A through F plus Washington's Birthday and Veterans Day.

e. ½ day vacation for each full 10 days employment in one calendar year.

f. $2.25 per hour in fringe benefits (excluding vacation payments).

PAID HOLIDAYS (Where Applicable):

A-New Year's Day; B-Memorial Day; C-Independence Day; D-Labor Day; E-Thanksgiving Day; F-Christmas Day.

SUPERSEDEAS DECISION

STATE: KENTUCKY COUNTIES: HARDIN, JEFFERSON, & MEADE

DECISION NUMBER: KY79-1108 DATE: DATE OF PUBLICATION

Supersedes Decision Number KY79-1022, dated February 2, 1979, in 44 FR 6871.

DESCRIPTION OF WORK: BUILDING CONSTRUCTION PROJECTS (does not include single family homes and garden type apartments up to and including 4 stories).

	Basic Hourly Rates	Fringe Benefits Payments			
		H & W	Pensions	Vacation	Education and/or Appr. Tr.
ASBESTOS WORKERS	$12.85	.60	1.00		
BOILERMAKERS	10.70	1.05	1.10		.02
BRICKLAYERS & STONE MASONS	11.44	.50	.40		.01
CARPENTERS	10.75	.55	.55		.05
CEMENT MASONS	9.78	1.00	.70		.04
ELECTRICIANS	13.30	.50	3% + .60		¼ of 1%
ELEVATOR CONSTRUCTORS:					
Mechanics	12.57	1.045	.69	a + b	.03
Helpers	8.80	1.045	.69	a + b	.03
GLAZIERS	8.90	.35	.45		
IRONWORKERS:					
Structural, ornamental, reinforcing, riggers, fence erectors, shooters, machinery movers, and conveyormen	12.00	1.40	1.45		.06
LATHERS	11.79		.20		.01
LINE CONSTRUCTION:					
Linemen, line truck operators & hole diggers	13.30	.50	3% + .60		¼ of 1%
Groundmen	8.246	.50	3% + .60		¼ of 1%
MARBLE MASONS	11.10	.50	.40		
MARBLE FINISHERS	9.40				
MILLWRIGHTS	12.75	.55	.85		.05
PAINTERS:					
AREA 1 - 35 mile radius from the Jefferson County Courthouse, Louisville, KY.:					
Brush, roller, drywall painting, taping & finishing, and paperhanging;	9.83	.35	.20		.03
Steeple jack work, bosun's chairs, safety-belt work, steamcleaning, sandblasting, exterior stage work and window jack work over 50' in height;	10.18	.35	.20		.03
Spray	10.28	.35	.20		.03

DECISION NO. KY79-1108

	Basic Hourly Rates	Fringe Benefits Payments			
		H & W	Pensions	Vacation	Education and/or Appr. Tr.
PAINTERS - AREA 1 (Cont'd.)					
REPAINT WORK:					
Brush, roller, drywall painting, taping, & finishing, and paperhanging;	$ 9.19	.35	.20		.03
Spray	9.64	.35	.20		.03
AREA 2 - over a 35 mile radius from the Jefferson County Courthouse, Louisville, KY.:					
Brush, roller, drywall painting, taping, & finishing, and paperhanging;	10.18	.35	.20		.03
Steeple jack work, boatswain chairs, safety-belt work, steamcleaning, sandblasting, exterior stage work and window jack over 50' in height;	10.53	.35	.20		.03
Spray	10.63	.35	.20		.03
REPAINT WORK:					
Brush, roller, drywall painting, taping, & finishing, and paperhanging	9.54	.35	.20		.03
Spray	9.99	.35	.20		.03
PILEDRIVERMEN	11.00	.55	.55		.05
PLASTERERS	11.35				.02
PLUMBERS & PIPEFITTERS:					
AREA 1 - Jefferson County:					
Plumbers	12.06	.80	1.24	.77	.15
Pipefitters	12.77	.75	1.40		.10
AREA 2 - Hardin (northern portion of county up to but not including Elizabethtown) and Meade Counties:					
Plumbers	12.51	.80	1.24	.77	.15
Pipefitters	13.22	.75	1.40		.10
AREA 3 - Hardin (remainder of County) County:					
Plumbers	12.76	.80	1.24	.77	.15
Pipefitters	13.47	.75	1.40		.10

DECISION NO. KY79-1108

	Basic Hourly Rates	Fringe Benefits Payments			
		H & W	Pensions	Vacation	Education and/or Appr. Tr.
ROOFERS:					
Roofers	$ 8.80	.65	.45		
Slab, tile, & precast concrete slab	9.20	.65	.45		
SHEET METAL WORKERS	12.28	1.333	1.26		.15
SOFT FLOOR LAYERS	10.75	.55	.55		.05
SPRINKLER FITTERS	12.75	.75	1.05		.08
TERRAZZO WORKERS	11.10	.50	.40		
TERRAZZO FINISHERS	9.40				
TILE LAYERS	11.10	.55	.55		
TILE FINISHERS	9.40				
WELDERS: Receive rate prescribed for craft performing operation to which welding is incidental.					
TRUCK DRIVERS:					
Truck helper & warehousemen;	$ 8.86	.525c	.50c	d	
Driver, 3 tons and under, greaser, tire changer and mechanic helper;	8.98	.525c	.50c	d	
Driver, over 3 tons, semi-trailer or pole trailer, dump trucks, tandem axle, farm tractor when used to pull building material or equipment;	9.09	.525c	.50c	d	
Driver, concrete mixer trucks (all types, hauling only on jobsites);	9.16	.525c	.50c	d	
Driver, Euclid & other heavy earth moving equipment and low-boy, winch truck and A-frame & monorail truck when used to transport building materials.	9.26	.525c	.50c	d	

DECISION NO. KY79-1108

LABORERS:	Basic Hourly Rates	Fringe Benefits Payments			
		H & W	Pensions	Vacation	Education and/or Appr. Tr.
Group 1	$ 8.43	.35	.47		
Group 2	8.63	.35	.47		
Group 3	8.78	.35	.47		
Group 4	8.93	.35	.47		
Group 5	9.63	.35	.47		

CLASSIFICATIONS DEFINITIONS

Group 1 - General laborers, mobile sweepers;

Group 2 - Power driven Georgia buggy, chain saw, vibrator operator, mesh handler, power tools (air, diesel, electric, gasoline), wagon drill, pipelayer, wall man, chip & bush hammer, concrete saw, gasoline tamper machine, walk behind trenching machine, burner man, joint maker, asphalt raker;

Group 3 - Air track driller, mason tender, side rail setter (metal), stockman;

Group 4 - Powderman, introflex burning rod, gunnite nozzle man operator, sewer & tunnel laborers (free air), sand hog or mucker (free air);

Group 5 - Boleman drilled, piers, augured caissons, sand miner (tunnel free air), caisson workers.

POWER EQUIPMENT OPERATORS:	Basic Hourly Rates	Fringe Benefits Payments			
		H & W	Pensions	Vacation	Education and or Appr. Tr.
CLASS A	$11.60	.50	.80		.05
CLASS B	8.86	.50	.80		.05
CLASS C	8.09	.50	.80		.05

CLASSIFICATIONS DEFINITIONS

Class A - Auto patrol, batcher plant, bituminous paver, cableway, central compressor plant, clamshell, concrete mixer (21 cu. ft. or over), concrete pump, crane, crusher plant, derrick, derrick boat, ditching and trenching machine, dragline, dredge operator, dredge engineer, elevating grader and all types of loaders, hoe type machine, hoist (1-drum when used for stack or chimney construction or repair), hoisting engine (2 or more drums), locomotive, motor scraper, carry-all scoop, bulldozer, heavy duty welder, mechanic, orangepeel bucket, pile driver, power blade, motor grader, roller (bituminous), scarifier, shovel, tractor shovel, truck crane, winch truck, push dozer, highlift, forklift (regardless of lift height and except when used for masonry construction), all types of boom cats, core drill, hopto, tow or push boat, A-frame winch truck, concrete paver, gradeall, hoist, hyster, pumpcrete, Ross carrier, boom, tail boom, rotary drill, hydro hammer, mucking machine, rock spreader attached to equipment, scoopmobile, KeCal loader, tower cranes (French, German and other types), hydrocrane, backfiller, gurries, sub-grader;

Class B - All air compressors (over 900 cu. ft. per min.), bituminous mixer, joint sealing machine, concrete mixer (under 21 cu. ft.), form grader, roller (rock), tractor (50 hp and over), bull float, finish machine, outboard motor boat, flexplane, fireman, boom type tamping machine, truck crane oiler, greaser on grease facilities servicing heavy equipment, switchman or brakeman, mechanic helper, whirley oiler, self-propelled compactor, tractair and road widening trencher and farm tractor with attachments except backhoe, highlift and end loader, elevator (regardless of ownership when used for hoisting any building material), hoisting engine (1-drum or buck hoist), forklift (when used for masonry construction), well points, grout pump, throttle-valve man, tugger, electric vibrator compactor;

Class C - Bituminous distributor, cement gun, conveyor, mud jack, paving joint machine, roller (earth), tamping machine, tractors (under 50hp), vibrator, oiler, concrete saw, burlap and curing machine, hydro-seeder, power form handling equipment, deckhand steerman, hydraulic post driver, drill helper.

FOOTNOTES:

a. Seven Paid Holidays: New Year's Day; Memorial Day; Independence Day; Labor Day; Thanksgiving Day; Friday after Thanksgiving Day; Christmas Day.

b. Employer contributes 8% of the basic hourly rate for 5 years or more of service, or 6% of the basic hourly rate for 6 months to 5 years of service as Vacation Pay Credit.

c. Employer contribution to employees whose names appear on the payroll and have been employed a minimum of 30 work days within any 90 consecutive day period.

d. Vacation and pay equal to 40 hours to any employee who has been regularly employed on a project for one year and who has worked a minimum of 1200 hours during the year.

SUPERSEDEAS DECISION

STATE: NEW YORK

COUNTIES: BRONX, KINGS, NEW YORK, QUEENS, RICHMOND

DECISION NO.: NY79-3014

DATE: DATE OF PUBLICATION

Supersedes Decision No. NY77-3044 dated June 17, 1977 in 42 FR 3110

DESCRIPTION OF WORK: Residential Construction projects consisting of single family homes and garden type apartments up to and including 4 stories.

RESIDENTIAL CONSTRUCTION	Basic Hourly Rates	Fringe Benefits Payments			
		H & W	Pensions	Vacation	Education and/or Appr. Tr.
Asbestos Workers	$12.38	1.02	1.82		
Boilermakers	13.19-	5%	15%	7%	.02
Bricklayers	11.25	1.27	3.68		
Carpenters, Piledrivers and Soft Floor Layers	11.80	1.50	1.78	.85	.04
Millwrights	12.13	1.55	1.78	.95	.02
Cement Masons	11.40	1.74	1.19		.02
Electricians and Linemen	13.45	7%	3%+a	6%+b	½%
Elevator Constructors	11.32	.745	.35+j	c+d	.02
Elevator Constructors helpers	8.44	.745	.35+j	c+d	.02
Elevator Constructors helpers probationary	5.66				
Elevator Constructors Modernization	9.35	.495	.32+j	c+d	.02
Elevator Constructors Modernization helpers	7.01	.495	.32+j	c+d	.02
Elevator Constructors Repair	8.50	.495	.32+j	c+d	.02
Elevator Constructors Repair Helpers	6.38	.495	.32+j	c+d	.02
Glaziers	12.20	.66	1.66	.67	.01
Ironworkers:					
Structural	11.50	1.55	3.00	1.60+i	.07
Ornamental Finisher	11.03	1.48	2.55	.78	.14
Reinforcing	10.41	1.325	1.985	.75+n	.03
Laborers:					
Asphalt Rakers	10.56	1.25	1.05	m	
Asphalt Tampers	10.32	1.25	1.05	m	
Asphalt Laborers	10.30	1.25	1.05	m	
Cement Concrete Workers	10.40	1.4025	1.7525	q	
Mason Tenders	10.35	.887	1.595		
Laborers	9.05	1.35	1.48		
Plasterer Tenders (King)	9.70	2.80		.80	
Plasterer Tenders (Queens)	9.60	1.55		1.35	.01
Plasterer Tenders (NY-Bronx-Richmond)	8.60	.90	1.40	.35	
Lathers, Metallic	10.79	1.325	1.985	.75+l	.03
Lead Burners	10.75	.40	.25	g	.01
Marble Setters:					
Carvers	10.60	1.21	1.71	f	
Cutters and Setters	10.45	1.21	1.71	f	
Sawyers, Rubbers and Polishers	10.93	1.21	1.71	f	
Crane operators and Derrickmen	9.55	1.21	1.71	f	

DECISION NO. NY79-3014

	Basic Hourly Rates	Fringe Benefits Payments			
		H & W	Pensions	Vacation	Education and/or Appr. Tr.
Painters:					
Brush	9.55	8½%	5%+h	3%	
Spray, Spray Gun and Scaffold	11.38	8½%	5%+h	3%	
Plasterers:					
Kings	10.60	1.10		1.40	.01
Queens	10.10	1.75		1.35	.01
Bronx-NY	10.15	1.10	1.54	.90	.01
Plumbers:					
Bronx and NY	10.55	4.70	r		
Kings-Queens	11.35	4.79	r		
Richmond	11.25	1.30+p	2.01	1.05	.30
Roofers:					
Composition, Damp, Waterproofers	9.65	1.79	2.65	.65	
Sheet Metal Workers	13.74	2.30	1.54		.16
Sprinkler Fitters & Steamfitters	12.33	2.75	1.12	1.00	.07
Stonemasons	11.00	.50	1.00		
Terrazzo Workers	11.18	1.21	1.50		
Terrazzo Workers helpers	9.84	1.21	1.50		
Tile Setters	10.95	1.15	.75		
Tile Setters helpers	7.90	.50	1.27		
Truck Drivers:					
Ready-mix concrete, sand, gravel and asphalt	9.44	.9675	1.8525	k+l	
Euclids and Turnapulls	8.825	.9675	1.8525	k+l	
Welders-receive rate prescribed for craft performing operation to which welding is incidental.					

PAID HOLIDAYS:

A-New Year's Day; B-Memorial Day; C-Independence Day; D-Labor Day; E-Thanksgiving Day; F-Christmas Day; G-Columbus Day; H-Day after Thanksgiving

FOOTNOTES:

a. Employer contributes $8.00 per day to an Annuity and Security Benefit Fund.

b. Paid Holidays: A through G, Washington"s Birthday, Election Day.

c. Paid Holidays: A through G; Lincoln's Birthday, Washington's Birthday; Election Day; Armistice Day.

d. Employees with 6 months or more but less than 5 years service receive 2 weeks vacation, 5 or more years of service receive 3 weeks vacation.

e. Employees with 6 months or more but less than 5 years service receive 2 weeks vacation 5 or more years but less than 15 years receive 3 weeks vacation, 15 or more years of service receive 4 weeks vacation.

f. Paid Holidays: ½ day's pay for Labor Day.

PAID HOLIDAYS CONTINUED:

g. Paid Holidays: A through F; Washington's Birthday, Christmas Eve, Good Friday, providing the employee has worked 30 full days during the 90 calendar days prior to the holiday, and the regular scheduled worked days immediately preceeding and following the holiday.

h. Employer contributes $5.00 per day to an Annuity Fund.

i. Paid Holidays: New Year's Eve and Christmas Eve, providing the employee works a full half day preceeding the holiday.

j. Employer contributes $8.00 per day to an Annuity Fund.

k. Paid Holidays: A through G; Lincoln's Birthday, Washington's Birthday, Election Day, Veteran's Day, providing the employee works 2 days in the calendar week in which the holiday falls and each remaining work day during such calendar week.

l. For each 15 days within the contract year an employee will will receive 1 days vacation with pay, with a maximum vacation of 3 weeks per year.

m. Paid Holidays: B,C,D,E,G, Election Day and Veteran's Day providing the employee works at least 1 day in the week in which the holiday occurs.

n. Work on Christmas Eve and New Year's Eve will terminate at noon, but the employee will receive a full day's pay.

p. Employer contributes $6.01 per day to an Annuity Fund.

q. If men work the last regular work day before Christmas Day, or the last regular work day before New Year's Day, the work day will end at Noon but men will be paid for a full 7 hour day; however, if men are required to work after 12 Noon they will be paid additional time and one-half for the hours worked.

r. Employer contributes $6.00 per day to an Annuity Fund.

DECISION NO. NY79-3014

RESIDENTIAL CONSTRUCTION

	Basic Hourly Rates	Fringe Benefits Payments			
		H & W	Pensions	Vacation	Education and/or Appr. Tr.
POWER EQUIPMENT OPERATORS:					
Double Drum Hoist	$11.66	.93	1.95	.70+a	.02
Stone Derrick, Cranes, Cherry Pickers	12.17	.93	1.95	.70+a	.02
Hoists, Fork Lifts, House Cars, Plasterer (platform machine), Plasterer Bucket, Plasterer Pump, Compressors-Welding Machines (cutting concrete-tank work), Paint Spraying, Sandblasting, and All Equipment Used For Hoisting Material	11.74	.93	1.95	.70+a	.02
Cranes: All types-crawler or truck					
100' to 149' Boom	12.67	.93	1.95	.70+a	.02
150' to 249' Boom	12.92	.93	1.95	.70+a	.02
250' to 349' Boom	13.17	.93	1.95	.70+a	.02
350' to 450' Boom	13.67	.93	1.95	.70+a	.02
Steel Erection:					
Three Drum Derricks	12.25	.93	1.95	.70+a	.02
Cranes, 2 Drum Derricks, Cherry Pickers	11.74	.93	1.95	.70+a	.02
Compressors, Welding Machines	10.51	.93	1.95	.70+a	.02
Tower Cranes	12.19	.93	1.95	.70+a	.02

FOOTNOTE:

A. Paid Holidays: New Year's Day, Lincoln's Birthday, Washington's Birthday, Good Friday (Iron League Only), Decoration Day, Independence Day, Labor Day, Columbus Day, Election Day, Armistice Day, Thanksgiving Day and Christmas Day providing the employee is employed during the payroll week in which the holiday occurs.

SUPERSEDEAS DECISION

STATE: NEW YORK

COUNTIES: CATTARAUGUS, CHAUTAUGUA AND ERIE

DECISION NO.: NY79-3015

DATE: DATE OF PUBLICATION

Supersedes Decision No. NY78-3049 dated June 16, 1978 in 43 FR 26250

DESCRIPTION OF WORK: Building Projects (Excluding single family homes and garden typ apartments up to and including 4 stories), heavy and highway project construction.

	Basic Hourly Rates	Fringe Benefits Payments			
		H & W	Pensions	Vacation	Education and/or Appr. Tr.
Asbestos Workers	$12.25	1.32	1.15		.06
Boilermakers	11.80	1.00	1.50		.02
Bricklayers:					
Area 1:					
Cattaraugus (Twp. of Perrysburg and Town of Gonawanda) and Erie Counties:					
Bricklayers, Stone Masons, Pointers, Caulkers and Cleaners	12.88	.65	1.40		
Marble Masons	12.595	.65	1.40		
Terrazzo Workers & Tile Setters	12.50	.65	1.40		
Area 2:					
Cattaraugus (excluding Twp. of Perrysburg and Town of Gonawanda) and Chautauqua Counties:					
Bricklayers, Cement Masons (building), Plasterers, Stone Masons, Tile and Terrazzo Workers	11.20	.70	1.10		.07
Carpenters:					
Area 1:					
Cattaraugus County (Twp. of Perrysburg & Village of Gonawanda):					
Carpenters, Millwrights, Piledrivermen and Dock-builders	11.98	1.60	1.95		
Soft Floor Layers	11.98	1.60	1.95		
Carpenters and Piledrivermen, Heavy and Highway	8.27	1.25	1.55	a	.025
Area 2:					
Cattaraugus (remainder of counry) and Chautauqua Counties:					
Carpenters, Building	9.87	.60	1.13	b	.02
Millwrights and Piledrivermen	10.12	.60	1.13	b	.02
Carpenters, Heavy & Highway	9.34	.60	1.13	a	.02
Area 3:					
Erie County (Grand Island north of White Haven Rd. only)					
Carpenters, building	10.39	1.35	1.00		.025
Millwrights, building	10.49	1.35	1.00		.025

DECISION NO. NY79-3015

	Basic Hourly Rates	Fringe Benefits Payments			
		H & W	Pensions	Vacation	Education and/or Appr. Tr.
Carpenters: (Cont'd)					
Carpenters and Piledrivers (Heavy and Highway)	8.72	1.35	1.00		.025
Area 4:					
Erie (remainder of county) County:					
Carpenters, Dockbuilders, Diver Tenders, Millwrights and Piledrivermen (Building, Heavy, and Highway)	11.98	1.60	1.95		
Divers	18.62	1.60	1.85		
Cement Masons, Building, Heavy & Highway:					
Erie County:					
Cement Mason	13.58		1.75		
Machine Operator	13.75		1.75		
Swing Scaffold	13.85		1.75		
Cattaraugus (Twp. of Perrysburg and Town of Gonawanda) County	12.88	.65	1.40		
Cement Masons, Heavy & Highway:					
Cattaragus (excluding the Twp. of Perrysburg and the Village of Gonawanda) and Chautauqua Counties:	9.35	.60	1.00		.05
Electricians:					
Area 1:					
Cattaraugus (twps. of Dayton and Leon) and Chautauqua (Twps. of Arkwright, Westfield, Charlotte, Cherry Creek, Dunkirk, Hanover, Pomfret, Portland, Ripley, Sheridan and Villanova) Counties:	12.35	.90	3%		.15
Area 2:					
Cattaraugus (Twps. of Carrolton, Cold Spring, Conewango, Elko, Great Valley, Hinsdale, Humphrey, Ischua, Little Valley, Napoli, Olean, Portville, Red House, Randolph, Salamanca and South Valley) and Chautauqua (remainder of County) Counties:	12.72	.85	3%+.65		½%

DECISION NO. NY79-3015	Basic Hourly Rates	Fringe Benefits Payments			
		H & W	Pensions	Vacation	Education and/or Appr. Tr.
Electricians: (Cont'd)					
Area 3:					
Cattaraugus County (remainder of county):					
Electricians	12.99	1.39	3%+1.65	b	.05
Cable Splicers	13.49	1.39	3%+1.65	b	.05
Area 4:					
Erie County	12.49	.65	3%+1.00		.05
Glaziers	11.54	1.70	.70		.25
Ironworkers:					
Area 1:					
Cattaraugus and Chautauqua (Twps of Cherry Creek, Ellington, Sheridan, Pomfret, Arkwright, Charlotte, Hanover, Villanova, and that portion of Portland east of a line from the southeast township corner extending through the Village of Brockton to Lake Erie) Counties:					
Structural, Ornamental, Reinforcing, Machinery Movers, Rodmen, Riggers, Fence Erectors, and Stone Derrickmen	11.79	1.19	1.81		
Sheeters	12.19	1.19	1.81		
Sheeters, Bucker-up	11.965	1.19	1.81		
Area 2:					
Chautauqua County (remainder of county):					
Structural, Ornamental, Reinforcing, Machinery Movers, Rodmen, Riggers, Fence Erectors, and Stone Derrickmen	11.59	1.86	1.01		.15
Sheeters	12.34	1.86	1.01		.15
Sheeters, Bucker-up	11.84	1.06	1.01		.15

DECISION NO. NY79-3015	Basic Hourly Rates	Fringe Benefits Payments			
		H & W	Pensions	Vacation	Education and/or Appr. Tr.
Ironworkers: (Cont'd)					
Area 3:					
Erie County (Northern half of Grand Island, the boundary of which shall be Whitehaven Road, from East River to West River):					
Structural, Ornamental, Reinforcing, Fence Erectors, Rodmen, Machinery Movers, Riggers, & Stone Derrickmen	10.82	.86	.82		
Sheeters	11.94	.86	.82		
Area 4:					
Erie County (remainder of county:					
Structural, Ornamental, Reinforcing, Fence Erectors, Rodmen, Machinery Movers, Riggers, Stone Derrickmen	11.52	1.06	1.56		
Sheeters	11.92	1.06	1.56		
Sheeters, Bucker-up	11.695	1.06	1.56		
Laborers:					
Cattaraugus and Chautauqua Counties	10.11	.55	.20		.01
Erie County	11.92		.10		
Lead Burners	10.75	.40	.25	c	.01
Marble, Tile & Terrazzo Workers'					
Finishers:					
Cattaraugus & Chautauqua Counties	10.06	1.65	.40		
Erie County	9.51	1.55	.40		
Painters:					
Area 1:					
Cattaraugus (Twps. of Perrysburg, Persia, Otto, Dayton, East Otto, Ashford, Yorkshire & Machias), Chautauqua (Twps. of Dunkirk, Portland, Pomfret, Sheridan, Arkwright, Hanover, and Villanova), and Erie (excluding north of White Haven Rd. on Grand Island) Counties:					
Painters	11.205	1.175	.30		.11

DECISION NO. NY79-3015

	Basic Hourly Rates	Fringe Benefits Payments			
		H & W	Pensions	Vacation	Education and/or Appr. Tr.
Painters: (Cont'd)					
Epoxy or Similar, Spray, Sandblasting, Bosun Chair, Swing and Scaffold, Taping, Hangers	11.455	1.175	.30		.11
Bridges 35 feet in Depth or from Road Level	12.87	1.175	.30		.11
Skeleton Steel, Radio-TV Towers, Flagpoles, Water Towers, Stacks	11.705	1.175	.30		.11
Area 2:					
Cattaraugus (Twps. of Leon, Conewango, South Valley, Randolph, New Albion & Napoli) and Chautauqua (remainder of county) Counties:					
Brush and Taping	8.825	.525	.30		.01
Structural Steel, Bridges, Tanks and Stacks	9.125	.525	.30		.01
Spray, Epoxy, Sandblasting	9.475	.525	.30		.01
Swing Scaffold, Bosun Chair, and Paperhangers	9.075	.525	.30		.01
Rollers	9.025	.525	.30		.01
Area 3:					
Cattaraugus County (remainder of county):					
Brush	8.35	.55	.85		.01
Ladder or Scaffold over 30 ft, 4 foot extension on Rollers, Taping (hand or machine)	8.60	.55	.85		.01
All Wallcovering and Paperhanging	8.70	.55	.85		.01
Spray, All Application of All Toxic Coatings	9.00	.55	.85		.01
Steel above 20 feet	8.65	.55	.85		.01
Bridges	9.35	.55	.85		.01
Area 4:					
Erie County (North of White Haven Road on Grand Island):					
Painters, brush	9.49	1.12	1.45		.01
Spray, steel, steeplejacks, stage chair & sandblasting	10.24	1.12	1.45		.01
Bridge-Crossing the Niagra River	11.355	1.12	1.45		.01

DECISION NO. NY79-3015

	Basic Hourly Rates	Fringe Benefits Payments			
		H & W	Pensions	Vacation	Education and/or Appr. Tr.
Plasterers:					
Erie County (except Tonawanda and Grand Island)	12.06				
Cattaraugus County (Twp of Perryburg and Town of Gonawanda)	12.71				
Plumbers & Steamfitters:					
Area 1:					
Cattaraugus (Twps. of Perrysburg, Dayton, Persia, Otto, Leon and Albion) County:	12.85	.83	1.11		.06
Area 2:					
Cattaraugus (Eastern ½ of County) County:					
Remodeling and New Construction not to exceed $15,000	6.00	.60	.80	.25+d	
Maintenance, Repair, Replacement and Renovation	9.00	.60	.80	.25+d	
All other Construction	11.00	.60	.80	.25+d	
Area 3:					
Chautauqua County (Twps. of French Creek, Clymer, Harmony, Busti, Kiantone, Carroll, Poland, Ellicott, North Harmony, Sherman, Nina, Ellery, Chautauqua, Gerry and Ellington)	11.62	.50	.55	2%	.01
Area 4:					
Chautauqua County (remainder of County):					
Plumbers	12.85	.83	1.11		.06
Steamfitters	13.24	1.40	1.18		.08
Area 5:					
Erie County:					
Plumbers	12.15	.83	1.11		.06
Steamfitters	12.87	1.12	.98		.08
Roofers:					
Cattaraugus & Chautauqua Counties	9.75	.50	.50		.02
Erie County:					
Composition, damp waterproofers sprayers, asphalt mastic, wood block floor workers, steep roofers and siders	10.96	.89	1.40		.02
Slate, precast tile roofers, tile asbestos	11.11	.89	1.40		.02

DECISION NO. NY79-3015	Basic Hourly Rates	Fringe Benefits Payments			
		H & W	Pensions	Vacation	Education and/or Appr. Tr.
Sheet Metal Workers:					
Cattaraugus and Chautauqua Counties	11.78	.65	3%+.50		.04
Erie County	12.63	1.33	1.03		.09
Sprinkler Fitters:					
Cattaraugus and Chautauqua Counties	12.31	.75	1.05		.08
Erie County	12.49	.65	.95		.06
Truck Drivers, Building:					
Cattaraugus and Chautauqua Counties	7.35	.55	.60	e+f	
Truck Drivers, Building, Heavy & Highway:					
Erie County:					
All other truck drivers	11.12	.85	.775	g+h	
Euclid	11.37	.85	.775	g+h	
Dump	9.60	.50	.55		
Ready Mix	9.965	.50	.775		

Footnotes:

a. Holidays: Independence & Labor Days

b. All employees shall receive 8 hours pay for 6 hours work on Election day.

c. Holidays: New Year's, Memorial, Independence, Labor, Thanksgiving and Christmas Days, plus Washington's Birthday, Good Friday and Christmas Eve, provided the employee works the 30 full days during the 90 calendar days prior to the holiday and works the regularly scheduled work day preceeding and following the holiday.

d. Holidays: Independence and Christmas Days.

e. Holidays: New Year's, Independence, Labor, Decoration, Thanksgiving & Christmas Day.

f. One week vacation for 1 year of service; 2 weeks of vacation after 2 years of service.

g. After one year, one week vacation; 2 years, 6 days vacation ; 3 years, 7 days vacation; up to 2 weeks maximum vacation after completion of the 5th year, full vacations are earned by a driver who works 1040 hours or more in the calendar year, if an employee works less than 1040 hours in any calendar year, vacation will be prorated for either 1 or 2 weeks of vacation on the basis of using the number of hours worked as the numerator and 1040 as the denominator.

h. Holidays: New Year's, Memorial, Independence, Labor, Thanksgiving and Christmas Days, except where the employee is laid off 2 or more weeks prior to the holiday.

DECISION NO. NY79-3015	Basic Hourly Rates	Fringe Benefits Payments			
		H & W	Pensions	Vacation	Education and/or Appr. Tr.
Laborers, Building:					
Cattaraugus (Twp. of Perrysburg and the Village of Gonawanda) County:					
Common Laborers	9.705	1.55	1.40		.10
Foundation Laborers over 8 ft. deep, Hod Carriers, Plasterers Tenders, Plasterer Scaffold Builders, Pneumatic Gas-Electric Tool Operators	9.805	1.55	1.40		.10
Mortar Mixers	9.855	1.55	1.40		.10
Tool Operators over 8 feet deep	9.905	1.55	1.40		.10
Bottoman (caisson or coffer-dam), plumbing laborers, wagon drill operators, swinging scaffold	9.955	1.55	1.40		.10
Cattaraugus (excluding Twp. of Perrysburg and the Village of Gonawanda) and Chautauqua Counties:					
Common Laborers and Flagmen	8.10	.60	.80	b	
Blasters, Nozzlemen (gunite, seeding, sandblasting), Curb and Form Setters (steel, stone and granite), Pipelayers	8.35	.60	.80	b	
Work 40 feet and over	8.25	.60	.80	b	

DECISION NO. NY79-3015

Laborers, Heavy & Highway:
Cattaraugus & Chautauqua Counties

	Basic Hourly Rates	Fringe Benefits Payments			
		H & W	Pensions	Vacation	Education and or Appr. Tr.
CLASS A	8.89	.70	.90	i	
CLASS B	9.09	.70	.90	i	
CLASS C	9.29	.70	.90	i	
CLASS D	9.49	.70	.90	i	

PAID HOLIDAYS:
A-New Year's Day; B-Memorial Day;
C-Independence Day; D-Labor Day;
E-Thanksgiving Day; F-Christmas Day.

FOOTNOTE:
i, Paid Holidays: A through F, provided the employee has worked the day before and after the holiday.

LABORERS: HEAVY AND HIGHWAY CONSTRUCTION:

CLASS A
Laborers, drill helpers, flagmen, outboard and hand boats.

CLASS B
Bull float, chain saw, concrete aggregate, bin, concrete bootman, gin buggy, hand or machine vibrator, jackhammer, mason tender, mortar mixer, pavement breaker, handlers of all steel mesh, small generators for laborers' tools, installation of bridge drainage pipe, pipelayers, vibrator type rollers, tamper, drill doctor, rail or screw op. on asphalt paver, water pump op. (1½" and single diaphram), nozzle (asphalt, gunnite, seeding and sand blasting), laborers on chain link fence erection, rock splitter and power unit, pusher type concrete saw and all other gas, electric, oil and air tool operators, wrecking laborer.

CLASS C
All rock or drill machine operators (except quarry master and similar type), acetylene torch op., asphalt raker, powderman.

CLASS D
Blasters, form setter, stone or granite curb setters.

DECISION NO. NY79-3015

	Basic Hourly Rates	Fringe Benefits Payments			
		H & W	Pensions	Vacation	Education and/or Appr. Tr.
Laborers:					
Erie County					
BUILDING					
Bottoman, blaster; plumbing laborer, wagon drill operator; swing scaffold	$ 9.955	1.55	1.40		.10
Pneumatic-gas-electric tool op.	9.805	1.55	1.40		.10
Tool operator (over 8 feet deep)	9.905	1.55	1.40		.10
Mortar mixer	9.855	1.55	1.40		.10
Foundation laborer (over 8 feet deep), hod carriers, plasterer tender, plasterer scaffold builder	9.805	1.55	1.40		.10
Laborer	9.705	1.55	1.40		.10
WRECKING					
Wagon drill operator	9.955	1.55	1.40		.10
Pneumatic gas-electric tool operators, steel burners	9.805	1.55	1.40		.10
Wrecking & topman	9.705	1.55	1.40		.10
OPEN CUT SEWER					
Blaster: Wagon drill op.	9.955	1.55	1.40		.10
Pneumatic gas electric tool op.	9.805	1.55	1.40		.10
Laborer: Top men	9.705	1.55	1.40		.10
CAISSON SHAFT COFFERDAMS (OPEN CUT)					
Blaster; Bottom men; wagon drill op.	9.955	1.55	1.40		.10
Pneumatic-gas-electric tool op.	9.805	1.55	1.40		.10
Top men	9.705	1.55	1.40		.10
SOFT GROUND TUNNEL OR JACKING					
Rodmen (reinforce); welder	9.555	1.55	1.40		.10
Lead miner	9.355	1.55	1.40		.10
Concrete form mover: Monkey hole man: Side miner	9.305	1.55	1.40		.10
Bottom shaft men	9.155	1.55	1.40		.10
Tunnel-shaft mucker: shaft miner	9.205	1.55	1.40		.10
Car pusher: Concrete placing crew; bull gangs & track gang	9.105	1.55	1.40		.10

DECISION NO. NY79-3015

	Basic Hourly Rates	Fringe Benefits Payments			
		H & W	Pensions	Vacation	Education and/or Appr. Tr.
ROCK TUNNEL					
Rodmen (reinforce); welder	$ 9.555	1.55	1.40		.10
Lead heading rock drillers	9.355	1.55	1.40		.10
Concrete form mover: Side heading rock drillers	9.305	1.55	1.40		.10
Plug hole and roof bolt drillers: Mucking machine tender; tunnel & shaft mucker; shaft sinking drillers	9.205	1.55	1.40		.10
Bottom shaft man	9.155	1.55	1.40		.10
Car pushers: Bull & tact gangs; concrete placing crew	9.105	1.55	1.40		.10
Top man	8.955	1.55	1.40		.10
ASPHALT WORKERS AND CURB SETTERS					
Asphalt plant men, blacksmith	8.805	1.55	1.40		.10
Dumpers, gutterman, painters, & smoothers	9.13	1.55	1.40		.10
Rakers, screed man	9.24	1.55	1.40		.10
Stone, wood & brick pavers	9.23	1.55	1.40		.10
Shovelers	9.035	1.55	1.40		.10
Curb setter helper	9.205	1.55	1.40		.10
Curb setter & flag layers	9.89	1.55	1.40		.10

DECISION NO. NY79-3015

	Basic Hourly Rates	Fringe Benefits Payments			
		H & W	Pensions	Vacation	Education and/or Appr. Tr.
LABORERS					
TUNNEL - FREE AIR					
Blasters, steel erectors, piledrivers, Riggers	$11.30	1.55	1.40		.13
Cement finisher, ironmen	11.05	1.55	1.40		.13
Tunnel worker, miners, drill runners, conveyormen, safety miners, maintenance men block layers, rodmen, caulker, powder carriers, chuck tenders, track men, nippers, burners, brakemen, derail men, cable men, hosemen, groutmen, gravelmen, form-men, bottom bell, top bell, signal men, form workers, movers, concrete workers, shaft men, tunnel laborers, caulkers	10.80	1.55	1.40		.13
Mole nipper, power watchmen, top laborers	9.80+p	1.55	1.40		.13

FOOTNOTE:

p - If top laborer uses an air spade, jackhammer or pavement breaker he shall receive $3.00 per day in addition to the above rate.

TUNNEL - COMPRESSED AIR					
Bottom bell, top nipper	11.80	1.55	1.40		.13
Top bell, signal men, shaft men	10.80	1.55	1.40		.13
Top laborers, powder watchmen	9.80	1.55	1.40		.13
Blasters, mucking machine op.	12.80	1.55	1.40		.13
Outside man, lock tender, gauge tender, outside muck lock tender	11.30	1.55	1.40		.13
Mole nipper per working shaft up to & including 2 moles	12.05	1.55	1.40		.13
Miner, drill runners, ironmen, maintenance men, muck men, inside mucklock tender, pumpmen electricians, cement finishers, rodmen, caulkers, carpenters, hydraulic men, shield drivers, monorail operators, motormen, conveyor men, safety miners, powdermen, pan men, riggers, chuck tenders, track men, Nippers, brakemen, derail men, cable men, hose men, grout men, gravel men, form workers, concrete workers, tunnel laborer	$12.30	1.55	1.40		.13
TUNNELS: PRESSURE					
26 lbs.up to but less than 31 lbs	11.80	1.55	1.40		.13
31 lbs.up to but less than 36 lbs	12.30	1.55	1.40		.13
36 lbs.up to but less than 41 lbs	12.80	1.55	1.40		.13
41 lbs. or more	13.30	1.55	1.40		.13

DECISION NO. NY79-3015

Laborers, Highway and Bridge Construction:
Erie County

	Basic Hourly Rates	Fringe Benefits Payments			
		H & W	Pensions	Vacation	Education and/or Appr. Tr.
CLASS A	8.405	1.55	1.40	j	.10
CLASS B	8.605	1.55	1.40	j	.10
CLASS C	8.805	1.55	1.40	j	.10
CLASS D	9.005	1.55	1.40	j	.10

PAID HOLIDAYS:
A-New Year's Day; B-Memorial Day; C-Independence Day; D-Labor Day; E-Thanksgiving Day; F-Christmas Day.

FOOTNOTE:
j: Paid Holidays: A through F, provided the employee has worked the day before and after the holiday.

LABORERS: HEAVY AND HIGHWAY CONSTRUCTION:

CLASS A
Laborers, drill helpers, flagmen, outboard and hand boats.

CLASS B
Bull float, chain saw, concrete aggregate, bin, concrete bootman, gin buggy, hand or machine vibrator, jackhammer, mason tender, mortar mixer, pavement breaker, handlers of all steel mesh, small generators for laborers' tools, installation of bridge drainage pipe, pipelayers, vibrator type rollers, tamper, drill doctor, tail or screw op. on asphalt paver, water pump op. (1½" and single diaphram), nozzle (asphalt, gunnite, seeding and sand blasting), laborers on chain link fence erection, rock splitter and power unit, pusher type concrete saw and all other gas, electric, oil and air tool operators, wrecking laborer.

CLASS C
All rock or drill machine operators (except quarry master and similar type), acetylene torch op., asphalt raker, powderman.

CLASS D
Blasters, form setter, stone or granite curb setters.

DECISION NO. NY79-3015

Line Construction	Basic Hourly Rates	Fringe Benefits Payments			
		H & W	Pensions	Vacation	Education and/or Appr. Tr.
Electricial Overhead and Underground Distribution Work:					
Lineman and Technicians	$10.50	1.00	3%+.75	k	3½%
Cable Splicers	13.70	1.00	3%+.75	k	3½%
Groundman Digging Machine Operator and Groundman Dynamiteman	9.45	1.00	3%+.75	k	3½%
Groundman Mobile Equipment Operator, Mechanic 1st Class, Groundman Truck Driver (tractor trailer units)	8.40	1.00	3%+.75	k	3½%
Groundman Truck Driver, Driver-Mechanic, Groundman (experienced)	7.825	1.00	3%+.75	k	3½%
All Overhead Transmission Line Work and Lighting For Athletic Fields:					
Lineman and Technicians	11.85	1.00	3%+.75	k	3½%
Groundman Digging Machine Operator, Groundman Dynamiteman	10.665	1.00	3%+.75	k	3½%
Groundman Mobile Equipment Operator, Mechanic 1st Class, Groundman Truck Driver (tractor trailer unit)	9.48	1.00	3%+.75	k	3½%
Groundman Truck Driver, Driver-Mechanic, Groundman (experienced)	8.8875	1.00	3%+.75	k	3½%
All Pipe Type Cable Installations:					
Lineman and Groundman Equipment Operator	12.45	1.00	3%+.75	k	3½%
Cable Splicer	13.695	1.00	3%+.75	k	3½%
Groundman Truck Driver, Groundman (experienced)	9.3375	1.00	3%+.75	k	3½%

DECISION NO. NY79-3015

LINE CONSTRUCTION (CONT'D):

	Basic Hourly Rates	Fringe Benefits Payments			
		H & W	Pensions	Vacation	Education and/or Appr. Tr.
Sub-station, Switching Structures (when not part of the line), Traffic Signals, Street Lighting and Electrical, Telephone or CATV Commercial Work:					
Linemen and Technicians	12.45	1.00	3%+.75	k	3½%
Cable Splicers	13.695	1.00	3%+.75	k	3½%
Groundman Mobile Equipment Operator, Mechanic 1st Class, Groundman Truck Driver (tractor-trailer unit)	9.96	1.00	3%+.75	k	3½%
Groundman Truck Driver, Driver-Mechanic, Groundman (experienced	9.3375	1.00	3%+.75	k	3½%
Groundman Dynamiteman, Groundman Digging Machine Operator	11.205	1.00	3%+.75	k	3½%
Telephone and other Communication Systems, both overhead and underground:					
Linemen and Installer Repairmen	8.34	.40	3%+.25	k	1%
Splicers	8.89	.40	3%+.25	k	1%
Groundman Digging Machine Operator	7.73	.40	3%+.25	k	1%
Groundman	5.72	.40	3%+.25	k	1%
Groundman Truck Driver	6.82	.40	3%+.25	k	1%
Groundman Dynamiteman	6.60	.40	3%+.25	k	1%

Paid Holidays: A-New Year's Day; B-Memorial Day; C-Independence Day; D-Labor Day E-Thanksgiving Day; F-Christmas Day.

FOOTNOTES:

k. Paid Holidays: A through F, Washington's Birthday, Good Friday, and Election Day for President of the United States and Governor of New York State, provided the employee works the day before and after the holiday.

DECISION NO. NY79-3015

Power Equipment Operators, Building Construction: Cattaraugus, Chautauqua, and Erie Counties:

	Basic Hourly Rates	Fringe Benefits Payments			
		H & W	Pensions	Vacation	Education and/or Appr. Tr.
GROUP I	$13.26	1.30	1.15	1	.16
GROUP II	12.175	1.30	1.15	1	.16
GROUP III	12.02	1.30	1.15	1	.16
GROUP IV	11.98	1.30	1.15	1	.16
GROUP V	11.895	1.30	1.15	1	.16
GROUP VI	9.09	1.30	1.15	1	.16
GROUP VII	11.585	1.30	1.15	1	.16
GROUP VIII	9.175	1.30	1.15	1	.16
GROUP IX	9.02	1.30	1.15	1	.16
GROUP X	11.125	1.30	1.15	1	.16
GROUP XI	11.74	1.30	1.15	1	.16
GROUP XII	9.245	1.30	1.15	1	.16
GROUP XIII	11.98	1.30	1.15	1	.16
GROUP XIV	8.875	1.30	1.15	1	.16
GROUP XV	12.675	1.30	1.15	1	.16
GROUP XVI	13.175	1.30	1.15	1	.16
GROUP XVII	13.675	1.30	1.15	1	.16

DECISION NO. NY79-3015

BUILDING - POWER EQUIPMENT OPERATORS

GROUP I: Master Mechanic

GROUP II: All boom type equipment (100 ft or less), all pan and carry-all operators, archer hoist, back and pull hoe operator, blast or rotary drill (track or cat mounted), boiler (when used for power), boom trucks, cableway operator, concrete paver machine, crane operator, derrick operator, dragline operator, elevating grader (self-propelled), head tower operator, hot roller (finish course), hydraulic booms, hydro crane, maintenance engineer, mucking machine operator, multiple drum hoist (more than 1 drum in use), Peine crane, Shovel operator, skimmer operator, test core drill machine, tractor shovel operator, vertical caisson auger drill, well drilling machine, Piledriving Machine operator, Scoopmobile

GROUP III: Back filling machine operator, kolman loader, roller machine operator, snatch and pusher cats, stone crusher, towed or self-propelled rollers, trenching machine operator

GROUP IV: Air hoist operator, cage hoist operator, conveyor operator, conveyor system (belt-crete or similar), hoisting engine op., house elevator (when used for hoisting), industrial tractor, locomotive op. (irrespective of power), push button hoist op., Strato tower, tractors (when using winch power)

GROUP V: Concrete mixer op. (¼ c.y. or over), gasoline driven boring machine, hydraulic system pumps, hydro hammer, finishing machine op. (asphalt spreader), finishing machine op.

GROUP VI: Air compressor operator (under 160 CFM), air compressor op. (over 160 CFM), generator, mechanical heater (when 3 are in a battery), power plant (in excess of 10KW), welding machine operator (to and including 3 machines).

GROUP VII: Bulldozer & tractor (50 h.p., drawbar or under) Jeep trencher, Mulchers, power brooms and rakes, seeders

GROUP VIII: Firemen

GROUP IX: Truck crane driver

DECISION NO. NY79-3015

BUILDING - POWER EQUIPMENT OPERATORS CONT'D

GROUP X: Aggregate bin op., cement bin op., concrete mixer op. (under ½ c.y.), tractor machines

GROUP XI: Grout machine operator, heating boiler operator (used for temporary heat), lubrication unit on truck, pneumatic mixer operator

GROUP XII: Pump operator (4" or over), pump operator (2-3 in a battery)

GROUP XIII: Bulldozer (over 50 h.p.), Monorail

GROUP XIV: Oiler, mechanical heaters (when 1 or 2 are used), pump operators (one inch), pump operators (2 inches), pump operators (3 inches)

GROUP XV: Crane with boom over 100 feet

GROUP XVI: Crane with boom over 200 feet

GROUP XVII: Crane with boom over 300 feet

PAID HOLIDAYS: A-New Year's Day; B-Memorial Day; C-Independence Day; D-Labor Day; E-Thanksgiving Day; F-Christmas Day.

FOOTNOTE:
1. Holidays: A through F; Election Day.

DECISION NO. NY79-3015

Power Equipment Operators, Heavy & Highway
Cattaraugus & Chautauqua Counties

	Basic Hourly Rates	Fringe Benefits Payments			
		H & W	Pensions	Vacation	Education and/or Appr. Tr.
CLASS I	$12.06	1.30	1.50	m	.16
CLASS II	11.83	1.30	1.50	m	.16
CLASS III	11.45	1.30	1.50	m	.16
CLASS IV	10.72	1.30	1.50	m	.16
CLASS V	9.38	1.30	1.50	m	.16
CLASS VI	9.00	1.30	1.50	m	.16
CLASS VII	8.27	1.30	1.50	m	.16
CLASS VIII	8.67	1.30	1.10	m	.16
CLASS IX	8.79	1.30	1.10	m	.16

POWER EQUIPMENT OPERATORS: HEAVY AND HIGHWAY CONSTRUCTION

CLASS I: Asphalt roller (except rubber tire), Automatic fine grade machine, backhoe (except tractor mounted, rubber tired), Black top plant (automated) blast or rotary drill (truck or cat mounted), cableway, caisson auger, central mix plant (automated), cherry picker - over 5 tons capacity, crane, derrick, dragline, dredge, dual drum paver, elevating grader (self-propelled or towed), excavator (all purpose - hydraulically operator), front end loader (4/c.y. and over), gradall, grader, head tower, hoist, 2 or 3 drum, locomotive (irrespective of size or power), maintenance engineer, mine hoist, mucking machine, overhead crane, pains crane or similar type, pile driver, quarry master or equivalent, shovel, skimmer, slip form paver, tractor drawn belt-type loader, truck crane, tunnel shovel

CLASS II: Asphalt roller (rubber tired), asphalt spreader, automatic fine grade machine, backhoe (tractor mounted, rubber tired), back filling machine, belt placer, bending machine (pipe), bituminous spreader and mixer, blacktop plant (non-automated), boom truck, boring machine, cage hoist, central mix plant (non-automated) and all concrete batching plants, cherry picker 5 tons and under, concrete paver over 16S, concrete pump, crusher, dozer or push cat, drill rigs tractor mounted, elevator, front end loader (under 4 c.y.) hi-pressure boiler (15 lbs. and over), hoist (one drum), hydraulic pipe jack machine or similar type machine, jersey spreader, kolman plant loader and similar type loaders (if employer requires another man to clean the screen or to maintain the equipment, he shall be and oiler), maintenance grease man, mixer for stabilized base self-propelled, monorail machine, plant engineer, pump crete, ready mix concrete plant, road widener, rock bit sharpener (all types), roller (all above subgrade), scraper, side boom, slip form paver, shorkel, stump chipping machine, trencher, tube finisher, winch, winch truck with A-frame

POWER EQUIPMENT OPERATORS: HEAVY AND HIGHWAY CONSTRUCTION CONT'D

CLASS III: Asphalt curb and gutter machines, blower for burning brush, chipping machine and chip spreader, concrete pavement spreaders and finishers, concrete curb and gutter machine, concrete curing machines, conveyor, drill core, drill well, electric pump used in conjuction with well point systems, farm tractor with accessories, fine grade machine, fork lift, hammers-hydraulic-self-propelled, hydraulic rock expander or similar type machine, hydraulic pump, motorized hydraulic pin puller and seeders, post hole digger and post driver, roller (grade and fill), tractor with towed accessories, vibratory compactor, vibro tamp, well point, grout or gunite machine.

CLASS IV: Aggregate plant, boiler, (used in conjunction with production), C.M.I. and similar type concrete spreaders, cement bin operator, concrete mixer (16s and under), concrete saw self-propelled, fireman, form tamper, fuel truck, mulching machine, power broom, revinius widener, steam cleaner, tractor.

CLASS V: Compressors (4 or less) exceeding 2000 C.F.M. Combined capacity.

CLASS VI: Compressors: 4 not to exceed 2000 C.F.M. combined capacity, or 3 or less wiht more than 1200 C.F.M. but not to exceed 2000 C.F.M., Compressors (any size but subject to other provisions for compressors), Dust Collectors, Generators, Pumps, Welding Machines (4 of any type or combination).

CLASS VII: Compressors: 3 or less not to exceed 1200 C.F.M. combined capacity: Compressors: (any size but subject ot other provisions for compressors), Dust Collectors, Generators, Pumps, Welding Machines (3 or less of any type or combination), Power Heaterman.

CLASS VIII: Oilers.

CLASS IX: Oiler-Driver.

FOOTNOTE:

m. Paid Holidays: New Year's Day; Memorial Day; Independence Day; Labor Day; Thanksgiving Day; and Christmas Day providing the employee works the day before and after the holiday.

DECISION NO. NY79-3015

Power Equipment Operators:
Heavy & Highway Construction:
Erie County

	Basic Hourly Rates	Fringe Benefits Payments			
		H & W	Pensions	Vacation	Education and/or Appr. Tr.
CLASS 1	$12.21	1.30	1.50	n	.16
CLASS 2	12.07	1.30	1.50	n	.16
CLASS 3	9.43	1.30	1.50	n	.16
CLASS 4	11.63	1.30	1.50	n	.16
CLASS 5-A	11.18	1.30	1.50	n	.16
CLASS 5-B	9.68	1.30	1.10	n	.16
CLASS 5-C	9.23	1.30	1.10	n	.16
CLASS 6	11.78	1.30	1.50	n	.16
CLASS 7	8.83	1.30	1.50	n	.16
CLASS 8	13.30	1.30	1.50	n	.16
CLASS 9	12.59	1.30	1.50	n	.16
CLASS 10	12.96	1.30	1.50	n	.16
CLASS 11	13.21	1.30	1.50	n	.16
CLASS 12	13.71	1.30	1.50	n	.16

POWER EQUIPMENT OPERATORS: HEAVY AND HIGHWAY

CLASS 1

All boom type equipment all pan and carry-all operators, archer hoist (finish course), asphalt roller (finish course). asphalt spreader or paver, automatic fine grade machine (C.M.I. and similar type), back filling machine operators, back and pull hoe operator, black top plants, blast or rotary drill (track or cat mounted), boiler (when used for power, boom trucks, boring machine operator, bulldozers (all sizes), cableway operator, caisson auger, cableway operator, central mix plant (and all concrete batching plants), cherry picker, concrete paver machine, concrete pump, crane operator, derrick operator, dragline operator, dredge, elevating grader (self-propelled), excavator (all purposed hydraulically operated), forklift, front end loader, gradall, grader, head tower operator, hydro crane, hydraulic booms, lubrication unit on truck, maintenance engineer, mucking machine operator, multiple drum hoist (more than 1 drum in use), overhead crane, peine crane or similar type, piledriving machine operator, pump crete, push or snatch cats, quarry master or equivalent, ready mix concrete plant, road widener, rock bit sharpener (all types), scoopcobile, shovel, side boom, skimmer operator, slip form paver (C.M.I. and similar type), test core drill machine, tractor shovel operator, truck crane, tunnel shovel machine, well drilling machine, winch, winch truck with A Frame, Tire truck and repair, tractor drawn belt type graders, trenching machine

DECISION NO. NY79-3015

POWER EQUIPMENT OPERATORS: HEAVY AND HIGHWAY (CONT'D)

CLASS 2

Airhoist operator, automatic fine grade machine (C.M.I. and similar type), belt placer (C.M.I. and similar type), bending machine, bituminous spreader and mixer, cage hoist operator, concrete finishing machine, concrete mixer operator ½ cu. yd. or more, concrete saw - self-propelled, concrete spreader, conveyor operator, conveyor systems (belt or crete or similar), hoisting engine operator, house elevator (when used for hoisting), Hydraulic pipe jack machine or similar type machines, hydro hammer or similar types, industrial tractor, kolman loader or similar type machine, locomotive operator, mixer for stabilized base self-propelled, monorail, plant engineer, push button hoist operators, roller machine operator, slip form paver (C.M.I. and similar type), snorkel, stone crushers, tractors (with towed accessories), tube finisher (C.M.I. and similar type), strato-tower, towed or self-propelled rollers, tractors (when used winch power)

CLASS 3

Air compressors (under 160 cu. ft.), air compressors (over 160 cu. ft.), mechanical heaters (when 3 are in a battery), generator, pump operator (2 or 3 in battery), pump operator (4" or over), welding machine operator (1 machine over 300 amps, or 2 or 3 machines regardless of amps)

CLASS 4

Firemen, jeep trencher, motorized hydraulic seeders, mulching machine, power broom and rakes

CLASS 5-A

Aggregate bid operator, C.M.I. and similar type concrete spreads, cement bid operators, concrete mixer operator (under ½ cu.ft.), mechanical heaters (when one or two are used), pump operator (one inch), pump operator (two inch), pump operator (three inch), revinius widener, steam cleaner tractor machines

CLASS 5-B

Oiler-Driver

CLASS 5-C

Oiler

POWER EQUIPMENT OPERATORS: HEAVY AND HIGHWAY (CONT'D)

CLASS 6
Asphalt curb and gutter machines, blower for burning brush, chipping machine, chip spreader, concrete curb and concrete curing machines, concrete gutter machines, grout or gunite machines, heating boiler operator (used for temporary heat), hydraulic rock expander or similar type machines, hydraulic system pumps, motorized hydraulic pin puller, pneumatic mixer operator, post hole digger, post driver, power plant in excess of 10 K.W., well point systems (electric, diesel, or gas driven)

CLASS 7
Mechanical heaters (when one or two are used), pump operator (one inch, two inch, or three inch)

CLASS 8
Master mechanic

CLASS 9
Assistant master mechanic

CLASS 10
Crane with boom over 100 feet

CLASS 11
Crane with boom over 200 feet

CLASS 12
Crane with boom over 300 feet

PAID HOLIDAYS:
A-New Year's Day; B-Memorial Day; C-Independence Day; D-Labor Day; E-Thanksgiving Day; F-Christmas Day.

FOOTNOTE:
n. Paid Holidays: A through F, provided employee works the day before and after the holiday.

TRUCK DRIVERS, HEAVY & HIGHWAY CONSTRUCTION:
CATTARAUGUS & CHAUTAUQUA COUNTIES

	Basic Hourly Rates	Fringe Benefits Payments			
		H & W	Pensions	Vacation	Education and/or Appr. Tr.
CLASS 1	9.49	.70	.70	o	
CLASS 2	9.54	.70	.70	o	
CLASS 3	9.59	.70	.70	o	
CLASS 4	9.74	.70	.70	o	
CLASS 5	9.89	.70	.70	o	

PAID HOLIDAYS:
A-New Year's Day; B-Memorial Day; C-Independence Day; D-Labor Day; E-Thanksgiving Day; F-Christmas Day.

FOOTNOTE:
o. Paid Holidays: A through f, provided the employee has worked the working day before and after the holiday.

TRUCK DRIVERS: HEAVY AND HIGHWAY CONSTRUCTION:

CLASS 1
Warehouseman, yardmen, truck helpers, pickups, panel trucks, flatboy material trucks(straight jobs), single axle dump trucks, dumpsters, material checkers and receivers, greasers, truck tirement, mechanic helpers and parts chaser.

CLASS 2
Tandems, batch trucks, mechanics and dispatcher.

CLASS 3
Semi-trailers, low-boy trucks, asphalt distributors trucks, agitator, mixer trucks and dumpcrete type vehicles, truck mechanic.

CLASS 4
Specialized earth moving equipment - euclid type or similar off-highway equipment, where not self loaded, and straddle (ross) carrier.

CLASS 5
Off- highway tandem back-dump, twin engine equipment and double hitched equipment where not self loaded.

SUPERSEDEAS DECISION

STATE: New York

COUNTIES: Albany, Rensselaer, Saratoga and Schenectady

DECISION NO.: NY79-3016

DATE: Date of Publication

SUPERSEDES DECISION NO. NY78-3060 dated August 4, 1978 in 43 FR 34693

DESCRIPTION OF WORK: Building Construction Projects (excluding single family homes and garden type apartments up to and including 4 stories), Heavy and Highway Construction Projects.

	Basic Hourly Rates	Fringe Benefits Payments			
		H & W	Pensions	Vacation	Education and/or Appr. Tr.
ASBESTOS WORKERS	12.67	.95	.41		.02
BOILERMAKERS	11.80	.95	10%		.02
BRICKLAYERS, CEMENT MASONS, MARBLE MASONS, PLASTERERS, POINTERS, CAULKERS, & CLEANERS	10.90	.70	.75		.03
BRICKLAYERS, CEMENT MASONS, MARBLE MASONS, PLASTERERS, POINTERS, CAULKERS & CLEANERS: (Rehabilitation work on residential structures over 4 stories defined to include demolition, alteration and repair on any existing structure which is intended for predominantly residential use)	7.81	.70	.75		.03
CARPENTERS:					
Saratoga County (Twps. of Day Hadley, Edinburg, Corinth and Moreau):					
Carpenters and Soft Floor Layers	10.25	.55	.70	a	.005
Millwrights	10.50	.55	.70	a	.005
Piledrivers	10.40	.55	.70	a	.005
Heavy and Highway	9.82	.55	.75		.025
Albany County, Rensselaer County, Saratoga County (Remainder of County), and Schenectady County:					
Carpenters, Drywall Installers and Soft Floor Layer	10.55	.70	.70		.02
Millwrights	11.05	.70	.70		.02
Piledrivermen	11.70	1.50	1.78	.91	.04
Heavy and Highway	9.67	.70	.70	b	.025
Rehabilitation work on residential structures over 4 stories defined to include demolition, alteration and repair on any existing structure which is intended for predominantly residential use	7.56	.70	.70		.02

	Basic Hourly Rates	Fringe Benefits Payments			
		H & W	Pensions	Vacation	Education and/or Appr. Tr.
CEMENT MASONS:					
Heavy and Highway	9.71	.70	.59		
DIVERS	14.47	1.575	1.78	1.03	.05
DIVER TENDERS	11.08	1.575	1.78	1.03	.05
ELECTRICIANS:					
Albany County (Cohoes and Watervliet)	12.15	.70	3% + .70	a	.05
Albany County (Remainder of County)	12.90	.75	3% + .60	c	.03
Rensselaer County (Schodack, Rensselaer, East Greenbush, Nassau and Stephentown)	12.90	.75	3% + .60	c	.03
Rensselaer County (Remainder of County)	12.15	.70	3% + .70	a	.05
Saratoga County (Ganseveen, Mt. McGregor, Schuylerville, Victory Mills, Wayville, Stillwater, Mechanicville and Waterford)	12.15	.70	3% + .70	a	.05
Saratoga County (Remainder of County)	11.60	.70	3% +1.20	a	.03
Schenectady County	11.60	.70	3% +1.20	a	.03
ELEVATOR CONSTRUCTORS	10.77	.745	.56	d+e	.025
ELEVATOR CONSTRUCTORS HELPERS	7.54	.745	.56	d+e	.025
ELEVATOR CONSTRUCTORS HELPERS PROBATIONARY	5.385				
GLAZIERS	8.66	.48	.25		.01
IRONWORKERS:					
Structural, Ornamental, Reinforcing, Machinery Mover, Fence Erector, Rigger, Rodman and Stone Derrickman	10.71	.75	1.04		.04
Sheeters	10.96	.75	1.04		.04
Sheeters, Bucker-up	10.835	.75	1.04		.04
Rehabilitation work on residential structures over 4 stories defined to include demolition, alteration and repair on any existing structure which is intended for predominantly residential use)	7.58	.75	1.04		.04

DECISION NO. NY79-3016 PAGE 3

	Basic Hourly Rates	Fringe Benefits Payments			
		H & W	Pensions	Vacation	Education and/or Appr. Tr.
LATHERS	10.46	.70	.30		.01
LATHERS (Rehabilitation work on residential structures over 4 stories defined to include demolition, alteration and repair on any existing structure which is intended for predominantly residential use)	7.59	.70	.30		.01
LEADBURNERS	10.75	.40	.25	d	.01
MARBLE TILE AND TERRAZZO WORKERS	10.40	.70	.75		
PAINTERS:					
Saratoga County (Twps. of Day, Hadley, Corinth, Moreau, Gansevoort and Mt. McGregor):					
Brush	8.42	.40	.30		
Window Jack, Structural Steel Swing Scaffold, Bosun Chair and Bridge	8.87	.40	.30		
Spray, Sandblasting and Waterblasting	9.11	.40	.30		
Albany County, Rensselaer County, Saratoga County (Remainder of County), Schenectady County:					
Brush	10.28		.35		
Structural Steel and Bridge	11.03		.35		
Swing Scaffold, Bosun Chair, Water Towers, Window Jacks, Flagpoles	10.78		.35		
Spray Gun Application and Sandblasting	12.13		.35		
PLUMBERS AND STEAMFITTERS:					
Albany County (Green Island Watervliet and Latham), Rensselaer County (Northern Half):					
Building, Heavy and Highway	10.90	.60	1.00		.04
Rehabilitation work on residential structures over 4 stories defined to include demolition, alteration and repair on any existing structure which is intended for predominantly residential use)	8.175	.60	1.00		.04

DECISION NO. NY79-3016 PAGE 4

	Basic Hourly Rates	Fringe Benefits Payments			
		H & W	Pensions	Vacation	Education and/or Appr. Tr.
PLUMBERS AND STEAMFITTERS:					
Saratoga County (Twps of Clifton Park, Galway, Milton and Atomic Projects at Malta and West Milton), Schenectady County	11.35	.75	1.00		.10
Saratoga County (Twps. of Halfmoon and Stillwater)	10.90	.60	1.00		.04
Saratoga County (Remainder of County)	10.84	.70	.98	g	.05
Albany County (Remainder of County), Rensselaer County (Southern Half)	10.84	.70	.98	g	.05
Albany County (Remainder of County, Rensselaer County (Southern Half), Saratoga County (Remainder of County): Rehabilitation work on residential structures over 4 stories defined to include demolition, alteration and repair on any existing structure which is intended for predominantly residential use	9.07	.80	1.02		.05
ROOFERS:					
Roofers	10.65	1.37	.40		.04
Pitch and Asbestos	11.15	1.37	.40		.04
SHEET METAL WORKERS	11.22	1.00	1.30	h	.06
SHEET METAL WORKERS: Rehabilitation work on residential structures over 4 stories defined to include demolition, alteration and repair on any existing structures which is intended for predominantly residential use	7.47	.95	3% + .90	h	.05
SPRINKLER FITTERS	12.31	.75	1.05		.08

	Basic Hourly Rates	Fringe Benefits Payments			
		H & W	Pensions	Vacation	Education and/or Appr. Tr.
TRUCK DRIVERS, BUILDING:					
Straight, winch, transit mix on job site, road oilers, dump, panel, pick-up, water and fuel trucks on site (including nozzle	9.37	1.00	.81	i	.12
Euclid or similar equipment	9.56	1.00	.81	i	.12
Lowboy or lowboy trailers	9.70	1.00	.81	i	.12
Welders - receive rate prescribed for craft performing operation to which welding is incidental					

PAID HOLIDAYS:
A-New Year's Day; B-Memorial Day; C-Independence Day; D-Labor Day; E-Thanksgiving Day and F-Christmas Day.

FOOTNOTES:

a. Holidays: Thanksgiving Day provided employee reports for work the day after the holiday.

b. Holidays: Labor Day and 4th of July.

c. Holiday: E, provided the employee works the day after the holiday, 3 hrs. before X-Mas Eve and New Year's Eve.

d. Holidays: A thru F, Day after Thanksgiving.

e. Employer contributes 8% of basic hourly rate for 5 years or more of service or 6% of basic hourly rate for 6 months to 5 years of service as Vacation Pay Credit.

f. Holidays: A thru F, Washington's Birthday, Good Friday and Christmas Eve, provided employee has worked 30 full days during the 90 days prior to the holiday, and the regularly scheduled work days immediately preceeding and following the holiday.

g. Employer contributes $4.00 per day to a Vacation Fund.

h. 2 hours off with pay on the first Tuesday after the first Monday of November, provided they are working on a job beyond 50 miles from the shop.

i. One week vacaton after on year's work; 2 weeks after 5 years.

LINE CONSTRUCTION	Basic Hourly Rates	Fringe Benefits Payments			
		H & W	Pensions	Vacation	Education and/or Appr. Tr.
Electrical Overhead and Underground Distribution Work:					
Lineman and Technicians	10.50	1.00	3%+.75	a	3½%
Cable Splicers	13.70	1.00	3%+.75	a	3½%
Groundman Digging Machine Operator and Groundman Dynamiteman	9.45	1.00	3%+.75	a	3½%
Groundman Mobile Equipment Operator, Mechanic 1st Class, Groundman Truck Driver (Tractor trailer units)	8.40	1.00	3%+.75	a	3½%
Groundman Truck Driver, Driver Mechanic, Groundman (experienced)	7.825	1.00	3%+.75	a	3½%
All Overhead Transmission Line Work and Lighting For Athletic Fields:					
Lineman and Technicians	11.85	1.00	3%+.75	a	3½%
Groundman Digging Machine Operator, Groundman Dynamiteman	10.665	1.00	3%+.75	a	3½%
Groundman Mobile EQuipment Operator, Mechanic 1st Class, Groundman Truck Driver (tractor trailer unit)	9.48	1.00	3%+.75	a	3½%
Groundman Truck Driver, Driver-Mechanic, Groundman (experienced)	8.8875	1.00	3%+.75	a	3½%
All Pipe Type Cable Installations:					
Lineman and Groundman Equipment Operator	12.45	1.00	3%+.75	a	3½%
Cable Splicer	13.695	1.00	3%+.75	a	3½%
Groundman Truck Driver, Groundman (experienced)	9.3375	1.00	3%+.75	a	3½%

DECISION NO. NY79-3016 PAGE 7

LINE CONSTRUCTION (CONT'D)	Basic Hourly Rates	Fringe Benefits Payments			
		H & W	Pensions	Vacation	Education and/or Appr. Tr.
Sub-station, switching structures (when not part of the line), traffic signals, street lighting and electrical, telephone or CATV commercial work:					
Lineman and technicians	12.45	1.00	3%+.75	a	3½%
Cable Splicers	13.695	1.00	3%+.75	a	3½%
Groundman Mobile Equipment Operator, Mechanic 1st Class, Groundmant Truck Driver (tractor trailer unit)	9.96	1.00	3%+.75	a	3½%
Groundman Truck Driver, Driver-Mechanic, Groundman (experienced)	9.3375	1.00	3%+.75	a	3½%
Groundman Dynamiteman, Groundman Digging Machine Operator	11.205	1.00	3%+.75	a	3½%
Telephone and Other Communication Systems, Both Overhead and Underground:					
Linemen and Installer Repairmen	8.34	.40	3%+.25	a	1%
Splicers	8.89	.40	3%+.25	a	1%
Groundman Digging Machine Operator	7.73	.40	3%+.25	a	1%
Groundman	5.72	.40	3%+.25	a	1%
Groundman Truck Driver	6.82	.40	3%+.25	a	1%
Groundman Dynamiteman	6.60	.40	3%+.25	a	1%

PAID HOLIDAYS: A-New Year's Day; B-Memorial Day; C-Independence Day; D-Labor Day; E-Thanksgiving Day; F-Christmas Day.

FOOTNOTE:

a. Paid Holidays: A through F, Washington's Birthday, Good Friday and Election Day for President of the United States and Governor of New York State, provided the employee works the day before and the day after the holiday.

DECISION NO. NY79-3016 PAGE 8

Albany County (Cities of Cohoes and Watervliet)
Saratoga County (Twps. of Halfmoon and Stillwater)
Rensselaer County (Twps. of Berlin, Sand Lake, Poestenkill, Brunswick, Petersburg, Schagticoke, Pittstown, Hoosick and Grafton)

LABORERS: HEAVY AND HIGHWAY CONSTRUCTION	Basic Hourly Rates	Fringe Benefits Payments			
		H & W	Pensions	Vacation	Education and/or Appr. Tr.
CLASS A	8.29	1.00	1.10	a	.10
CLASS B	8.49	1.00	1.10	a	.10
CLASS C	8.69	1.00	1.10	a	.10
CLASS D	8.89	1.00	1.10	a	.10

PAID HOLIDAYS:
A-New Year's Day; B-Memorial Day; C-Independence Day; D-Labor Day; E-Thanksgiving Day; F-Christmas Day.

FOOTNOTE:

a. Paid Holidays: A through F, provided the employee has worked the day before and after the holiday.

LABORERS: HEAVY AND HIGHWAY CONSTRUCTION:

CLASS A
Laborers, drill helpers, flagmen, outboard and hand boats.

CLASS B
Bull float, chain saw, concrete aggregate, bin, concrete boatman, gin buggy, hand or machine vibratory, jackhammer, mason tender, mortar mixer, pavement breaker, handlers of all steel mesh, small generators for laborers' tools, installation of bridge drainage pipe, pipelayers, vibrator type rollers, tamper, drill doctor, tail or screw op. on asphalt paver, water pump op. (1½" and single diaphram), nozzle (asphalt, gunnite, seeding and sand blasting), laborers on chain link fence erection, rock splitter and power unit, pusher type concrete saw and all other gas, electric, oil and air tool operators, wrecking laborer.

CLASS C
All rock or drill machine operators (except quarry master and similar type), acetylene torch op., asphalt raker, powderman.

CLASS D
Blasters, form setter, stone or granite curb setters.

DECISION NO. NY79-3016 PAGE 9

Albany County (Entire County except Cities of Cohoes and Watervliet)
Rensselaer County (Twps. of North Greenbush, East Greenbush, Schodack, Nassau and Stephentown)

LABORERS: HEAVY AND HIGHWAY CONSTRUCTION	Basic Hourly Rates	Fringe Benefits Payments			
		H & W	Pensions	Vacation	Education and/or Appr. Tr.
CLASS A	8.39	.90	1.10	a	.10
CLASS B	8.59	.90	1.10	a	.10
CLASS C	8.79	.90	1.10	a	.10
CLASS D	8.99	.90	1.10	a	.10

PAID HOLIDAYS:
A-New Year's Day; B-Memorial Day; C-Independence Day; D-Labor Day; E-Thanksgiving Day; F-Christmas Day.

FOOTNOTE:
a. Paid Holidays: A through F, provided the employee has worked the day before and after the holiday.

LABORERS: HEAVY AND HIGHWAY CONSTRUCTION:

CLASS A
Laborers, drill helpers, flagmen, outboard and hand boats.

CLASS B
Bull float, chain saw, concrete aggregate, bin, concrete bootman, gin buggy, hand or machine vibratory, jackhammer, mason tender, mortar mixer, pavement breaker, handlers of all steel mesh, small generators for laborers' tools, installation of bridge drainage pipe, pipelayers, vibrator type rollers, tamper, drill doctor, tail or screw op. on asphalt paver, water pump op. (1½" and single disphram), nozzle (asphalt, gunnite, seeding and sand blasting), laborers on chain link fence erection, rock splitter and power unit, pusher type concrete saw and all other gas, electric, oil and air tool operators, wrecking laborer.

CLASS C
All rock or drill machine operators (except quarry master and similar type), acetylene torch op., asphalt raker, powderman.

CLASS D
Blasters, form setter, stone or granite curb setters.

DECISION NO. NY79-3016 PAGE 10

Saratoga (Twps. of Day, Hadley, Edinburg, Corinth, Moreau, Wilton, Providence, Greenfield, Northumberland, Galway, Milton, Charlton, Saratoga Springs, Malta, Ballston and Clifton Park)
Schenectady County

LABORERS: HEAVY AND HIGHWAY CONSTRUCTION	Basic Hourly Rates	Fringe Benefits Payments			
		H & W	Pensions	Vacation	Education and/or Appr. Tr.
CLASS A	8.64	.80	1.00	a	.05
CLASS B	8.84	.80	1.00	a	.05
CLASS C	9.04	.80	1.00	a	.05
CLASS D	9.24	.80	1.00	a	.05

PAID HOLIDAYS:
A-New Year's Day; B-Memorial Day; C-Independence Day; D-Labor Day; E-Thanksgiving Day; F-Christmas Day.

FOOTNOTE:
a. Paid Holidays: A through F, provided the employee has worked the day before and after the holiday.

LABORERS: HEAVY AND HIGHWAY CONSTRUCTION:

CLASS A
Laborers, drill helpers, flagmen, outboard and hand boats.

CLASS B
Bull float, chain saw, concrete aggregate, bin, concrete bootman, gin buggy, hand or machine vibratory, jackhammer, mason tender, mortar mixer, pavement breaker, handlers of all steel mesh, small generators for laborers' tools, installation of bridge drainage pipe, pipelayers, vibrator type rollers, tamper, drill doctor, tail or screw op. on asphalt paver, water pump op. (1½" and single disphram), nozzle (asphalt, gunnite, seeding and sand blasting), laborers on chain link fence erection, rock splitter and power unit, pusher type concrete saw and all other gas, electric, oil and air tool operators, wrecking laborer.

CLASS C
All rock or drill machine operators (except quarry master and similar type), acetylene torch op., asphalt raker, powderman.

CLASS D
Blasters, form setter, stone or granite curb setters.

DECISION NO. NY79-3016 PAGE 11

Albany County: North to 1st Ave in Watervliet, West on 1st Ave (South side) to Lincoln Ave; North on Lincoln Ave (west side) to Watervliet-Shaker Rd. (route 155, south side) to Junction of Route 9; North on route 9, (west side) to Crescent Bridge and Mohawk River.
Rensselaer County Twps. of North Greenbush, East Greenbush, Schodack, Nassau, Stephentown and Rensselaer City.

	Basic Hourly Rates	Fringe Benefits Payments			
		H & W	Pensions	Vacation	Education and/or Appr. Tr.
LABORERS: Rehabilitation work on residential structures over 4 stories defined to include demolition, alteration and repair on any existing structure which is intended for predominantly residential use:					
GROUP I	6.57	.90	1.10		.12
GROUP II	6.695	.90	1.10		.12
GROUP III	6.71	.90	1.10		.12
GROUP IV	6.75	.90	1.10		.12
GROUP V	6.785	.90	1.10		.12
GROUP VI	6.77	.90	1.10		.12
GROUP VII	6.95	.90	1.10		.12
LABORERS, BUILDING:					
GROUP I	9.47	.90	1.10		.12
GROUP II	9.62	.90	1.10		.12
GROUP III	9.645	.90	1.10		.12
GROUP IV	9.695	.90	1.10		.12
GROUP V	9.745	.90	1.10		.12
GROUP VI	9.725	.90	1.10		.12
GROUP VII	9.945	.90	1.10		.12

DECISION NO. NY79-3016 PAGE 12

Albany County: The west side of the Hudson River, extending westerly along the north side of 1st street (Watervliet), to one-half mile of route 9 to Shaker Rd. to route 9 northerly to the north line of Albany County.
Rensselaer County: Twps of Berlin, Sand Lake, Poestenkill, Schodack, Pittstown, Hoosick, Brunswick, Grafton and Petersburg.
Saratoga County: Beginning sourtherly at the east side of route 9, running northerly along route 9 to Malta, including all of the Twp of Stillwater, continuing along the east shore of Saratoga Lake to the Saratoga City Line, easterly of Saratoga City Line taking in all of the Twp. of Schuylerville.
This includes all towns, cities and villages in forsaid counties.

	Basic Hourly Rates	Fringe Benefits Payments			
		H & W	Pensions	Vacation	Education and/or Appr. Tr.
LABORERS: Rehabilitation work on residential structures over 4 stories defined to include demolition, alteration and repair on any existing structure which is intended for predominantly residential use:					
GROUP I	6.62	.95	1.00		.12
GROUP II	6.745	.95	1.00		.12
GROUP III	6.76	.95	1.00		.12
GROUP IV	6.80	.95	1.00		.12
GROUP V	6.835	.95	1.00		.12
GROUP VI	6.82	.95	1.00		.12
GROUP VII	7.00	.95	1.00		.12
LABORERS, BUILDING:					
GROUP I	9.50	.95	1.00		.12
GROUP II	9.65	.95	1.00		.12
GROUP III	9.675	.95	1.00		.12
GROUP IV	9.725	.95	1.00		.12
GROUP V	9.775	.95	1.00		.12
GROUP VI	9.755	.95	1.00		.12
GROUP VII	9.975	.95	1.00		.12

Saratoga County: Twps of Day, Hadley, Edinburg, Corinth, Moreau, South Glen Falls, Providence, Greenfield, Wilton, Northumberland, Galway, Milton, Saratoga Springs, Charlton, Ballston, Malta and Clifton Park
Schenectady County

	Basic Hourly Rates	Fringe Benefits Payments			
		H & W	Pensions	Vacation	Education and/or Appr. Tr.
Rehabilitation work on residential structures over 4 stories defined to include demolition, alteration and repair on any existing structure which is intended for predominantly residential use:					
GROUP I	6.82	.80	1.00		.07
GROUP II	6.945	.80	1.00		.07
GROUP III	6.96	.80	1.00		.07
GROUP IV	7.00	.80	1.00		.07
GROUP V	7.035	.80	1.00		.07
GROUP VI	7.12	.80	1.00		.07
GROUP VII	7.20	.80	1.00		.07
LABORERS, BUILDING:					
GROUP I	9.72	.80	1.00		.07
GROUP II	9.87	.80	1.00		.07
GROUP III	9.895	.80	1.00		.07
GROUP IV	9.945	.80	1.00		.07
GROUP V	9.995	.80	1.00		.07
GROUP VI	9.97	.80	1.00		.07
GROUP VII	10.195	.80	1.00		.07

LABORERS DEFINITIONS (RESIDENTIAL REHABILITATION)
ALL AREAS

GROUP I
Laborers

GROUP II
Pipelayers (2 man team) mortar mixers (hand or machine), jackhammer operator, well pointing, concrete vibrators, all air or gas driven tools, hod carriers, power driven buggies

GROUP III
Form setter (curb)

GROUP IV
Wagon drill operator

GROUP V
Acetylene burners

GROUP VI
Demolition

GROUP VII
Blasters

LABORERS DEFINITIONS (BUILDING CONSTRUCTION)
ALL AREAS

GROUP I
Laborers

GROUP II
Pipelayers (2 man team), Mortar mixers (hand or machine), jackhammer operator, well pointing, concreter vibrators, power driven buggies

GROUP III
Form setter (curb)

GROUP IV
Wagon drill operator

GROUP V
Acetylene burners

GROUP VI
Demolition

GROUP VII
Blasters

POWER EQUIPMENT OPERATORS: HEAVY & HIGHWAY CONSTRUCTION	Basic Hourly Rates	Fringe Benefits Payments			
		H & W	Pensions	Vacation	Education and/or Appr. Tr.
GROUP I	10.73	1.05	1.05	a	.15
GROUP II	10.37	1.05	1.05	a	.15
GROUP III	9.36	1.05	1.05	a	.15
GROUP IV	8.46	1.05	1.05	a	.15

PAID HOLIDAYS:
A-New Year's Day; B-Memorial Day; C-Independence Day; D-Labor Day; E-Thanksgiving Day; F-Christmas Day.

FOOTNOTES:
a. Paid Holidays: A through F, providing the employee works the day befor and the day after the holiday.

POWER EQUIPMENT OPERATORS: HEAVY AND HIGHWAY CONSTRUCTION
GROUP I - Automated concrete spreader (CMI), automatic fine grader, backhoe (except tractor mounted, rubber tired), belt placer (CMI type), blacktop plant (automated), cableway, caisson auger, central mix concrete plant (automated), cherry picker (over 5 tons capacity), concrete pump (8" or over), crane, cranes & derricks (steel erection), dragline, dredge, dual drum paver, excavator (all purpose-hydraulically operated, (gradall, or similar), fork lift (factor rated 15 ft. and over), front end loader 4 c.y. and over), head tower (sauerman or equal) hoist (2 or 3 drum), mine hoist, mucking machine or mole, over head crane (gantry or straddle type), piledriver, power grader, quarry master (or equivalent), scraper, shovel, sideboom, slip form paver (if second man is needed, he shall be an oiler), tractor drawn belt type loader, truck crane, tunnel shovel.

GROUP II - Backhoe (tractor mounted, rubber tired), bituminous spreader and mixer, blacktop plant (non-automated), blast or rotary drill truck or tractor mounted), boring machine, cage-hoist, central mix plant (non-automated and all concrete batching plants), cherry picker (5 tons capacity and under), compressours (4 or less) exceeding 2000 C.F.M. combined capacity concrete paver (over 16S), concrete pump (under 8"), crusher, diesel power unit, drill rigs (tractor mounted), front end loader (under 4 c.y.), hi-pressure - boiler (15 lobs. and over), hoist (one drum) Kolman plant loader and similar type loaders (if another man is required to clean screen or to maintain the equipment, he shall be an oiler), locomotive maintenance/engineer/greaseman/welder, mixer (for stabilized base self-propelled), monorail machine, plant engineer, pump crete, ready mix concrete plant, refrigeration equipment (for soil stabilization), road widener, roller (all above subgrade), tractor with dozer and/or pusher, trencher, tugger-hoist, winch, winch cat.

POWER EQUIPMENT OPERATORS: HEAVY AND HIGHWAY CONSTRUCTION CONT'D
GROUP III - Asphalt curb and gutter machines, blower for burning brush, chipping machine and chip spreader. compressors: 4 not exceedd 2,000 c.f.m. combined capacity, 3 or less with more than 1,200 c.f.m. but not to exceed 2,000 c.f.m., compressor, (any size but subject to othe provisions for compressors), dust collectors, generators, pumps, welding machines (4 of any type or combination) concrete curing machines, convyor drill core, drill well, electric pump used in conjuction with well point systems, farm tractor with accessories, fine grade machine, hammers-hydraulic-self-propelled, hydraulic rock expander or similar type machine, hydraulic pump, motorized hydraulic pin puller and seeders, post hole digger and post driver, roller (grade and fill), tractor with towed accessories, vibratory compactor, vibro tamp, well point.

GROUP IV - Aggregate plant, boiler, (used in vonjunction with production), C.M.I. and similar type concrete spreaders, cement bin operator, compressors: 3 or less not to exceed 1,200 c.f.m. combined capacity, compressors: (any size, but subject to othe provisions, for compressors), dust collectors, generators, pumps, welding machines (3 or less of any type of combination), concrete mixer (16S and under), concrete saw self-propelled, fireman, form tamper, mulching machine, oiler, power broom, power heaterman, revinius widener, steam cleaner, tractor.

POWER EQUIPMENT OPERATORS, BUILDING CONSTRUCTION: Albany County, Rensselaer County, Saratoga County and Schenectady County	Basic Hourly Rates	Fringe Benefits Payments			
		H & W	Pensions	Vacation	Education and/or Appr. Tr.
GROUP I	10.58	.95	.75	a	.15
GROUP II	10.65	.95	.75	a	.15
GROUP III	10.78	.95	.75	a	.15
GROUP IV	10.99	.95	.75	a	.15
GROUP V	11.35	.95	.75	a	.15
GROUP VI	11.52	.95	.75	a	.15
GROUP VII	11.73	.95	.75	a	.15

POWER EQUIPMENT OPERATORS: BUILDING CONSTRUCTION

GROUP I
Oilers

GROUP II
Firemen and heavy duty greasers, all boilers and steam generators

GROUP III
Pumps, vibrators, concrete mixers, spreaders, concret finishing amchines, mortar mixers, air compressors, dust collectors, welding machines, well points, two or more Herman Nelson and like heaters, batch and plant op., seed and mulching machines, generators, temporary light plants, concrete pump, beltcrete power pac (beltcrete system), electric submersible pump 4" and over

GROUP IV
Dinkey locomotives, Baber Greene loaders, loaders and conveyors, tractor, scoopmobiles, bulldozers, road roller, form fine graders, power brooms and sweeper

GROUP V
Black top spreaders, black top roller, high lifts, fork lifts, one drum hoist or hod hoists, post hole diggers, traxcavators, core and well driller (one drum), economobile and similar type machines, elevators, A-L frame winches, power hoisting (single drum)

POWER EQUIPMENT OPERATORS: BUILDING CONSTRUCTION CONT'D

GROUP VI
LeTourneau graders or scrapers, trenching machines, push cart

GROUP VII
Tractor road pavers, cranes, power road graders, shovels, backhoes, draglines, pile drivers, hoists two or more drums, three drum engines, hysters, two drum and swinging engines, three drum swinging engine, locomotive cranes, gradalls, hydrocrane, model CHB Vibrotamp or similar, Murphy type diesel generator-beltcreté system, side booms, hydro hammer, tractor mounted drill (quarry master), euclid loaders, concrete pumps, all CMI equipment, concrete central mix plant, automated asphalt, concrete central plant, derrick, whirlies, tower cranes, cableways, hydraulic cranes, power hoisting (2 drum and over), mucking machine

PAID HOLIDAYS:
A-New Year's Day; B-Memorial Day; C-Independence Day; D-Labor Day; E-Thanksgiving Day; F-Christmas Day.

FOOTNOTES:
a. Holidays: A through F.

(Rehabilitation work on residential structures over 4 stories defined to include demolition, alteration and repair on any existing structure which is intended for predominantly residential use).

POWER EQUIPMENT OPERATORS: Albany County, Rensselaer County, Saratoga County and Schenectady County	Basic Hourly Rates	Fringe Benefits Payments			
		H & W	Pensions	Vacation	Education and/or Appr. Tr.
GROUP I	7.12	.90	.90	a	.15
GROUP II	7.17	.90	.90	a	.15
GROUP III	7.26	.90	.90	a	.15
GROUP IV	7.41	.90	.90	a	.15
GROUP V	7.06	.90	.90	a	.15
GROUP VI	7.78	.90	.90	a	.15
GROUP VII	7.93	.90	.90	a	.15

POWER EQUIPMENT OPERATORS: BUILDING CONSTRUCTION

GROUP I
Oilers

GROUP II
Firemen and heavy duty greasers, all boilers and steam generators

GROUP III
Pumps, vibrators, concrete mixers, spreaders, concret finishing machines, mortar mixers, air compressors, dust collectors, welding machines, well points, two or more Herman Nelson and like heaters, batch and plant op., seed and mulching machines, generators, temporary light plants, concrete pump, beltcrete power pac (beltcrete system), electric submersible pump 4" and over

GROUP IV
Dinkey locomotives, Baber Greene loaders, loaders and conveyors, tractor, scoopmobiles, bulldozers, road roller, form fine graders, power brooms and sweeper

GROUP V
Black top spreaders, black top roller, high lifts, fork lifts, one drum hoist or hod hoists, post hole diggers, traxcavators, core and well driller (one drum), economobile and similar type machines, elevators, A-L frame winches, power hoisting (single drum)

POWER EQUIPMENT OPERATORS: BUILDING CONSTRUCTION CONT'D

GROUP VI
LeTourneau graders or scrapers, trenching machines, push cart

GROUP VII
Tractor road pavers, cranes, power road graders, shovels, backhoes, draglines, pile drivers, hoists two or more drums, three drum engines, hysters, two drum and swinging engines, three drum swinging engine, locomotive cranes, gradalls, hydrocrane, model CHB Vibrotamp or similar, Murphy type diesel generator-beltcrete system, side booms, hydro hammer, tractor mounted drill (quarry master), euclid loaders, concrete pumps, all CMI equipment, concrete central mix plant, automated asphalt, concrete central plant, derrick, whirlies, tower cranes, cableways, hydraulic cranes, power hoisting (2 drum and over), mucking machine

PAID HOLIDAYS:
A-New Year's Day; B-Memorial Day; C-Independence Day; D-Labor Day; E-Thanksgiving Day; F-Christmas Day.

FOOTNOTES:
a. Holidays: A through F.

DECISION NO. NY79-3016 PAGE 21

TRUCK DRIVERS: HEAVY AND HIGHWAY CONSTRUCTION	Basic Hourly Rates	Fringe Benefits Payments			
		H & W	Pensions	Vacation	Education and/or Appr. Tr.
CLASS 1	9.14	.95	.80	a	
CLASS 2	9.19	.95	.80	a	
CLASS 3	9.24	.95	.80	a	
CLASS 4	9.39	.95	.80	a	
CLASS 5	9.54	.95	.80	a	
PAID HOLIDAYS: A-New Year's Day; B-Memorial Day; C-Independence Day; D-Labor Day; E-Thanksgiving Day; F-Christmas Day.					

FOOTNOTE:
a. Paid Holidays: A through F, provided the employee has worked the working day before and after the holiday

TRUCK DRIVER: HEAVY AND HIGHWAY CONSTRUCTION:

CLASS 1
Warehouseman, yardmen, truck helpers, pickups, panel trucks, flatboy material trucks (straight jobs), single axle dump trucks, dumpsters, material checkers and receivers, greasers, truck tiremen, mechanic helpers and parts chaser.

CLASS 2
Tandems, batch trucks mechanics and dispatcher.

CLASS 3
Semi-trailers, low-boy trucks, asphalt distributors trucks, agitator, mixer trucks and dumpcrete type vehicles, truck mechanic.

CLASS 4
Specialized earth moving equipment - euclid type or similar off-highway equipment, where not self loaded, and straddle (ross) carrier.

CLASS 5
Off-highway tandem back dump, twin engine equipment and double hitched equipment where not self loaded.

SUPERSEDEAS DECISION

STATE: North Carolina COUNTIES: See below*
DECISION NUMBER: NC79-1106 DATE: Date of Publication
Supersedes Decision No. NC76-1094 September 3, 1976 in 41 FR 37506
DESCRIPTION OF WORK: Residential Construction Projects consisting of single family homes and garden type apartments up to and including 4 stories.

*Counties: Chatham, Cumberland, Harnett, Hoke, Lee, Moore, and Sampson

	Basic Hourly Rates	Fringe Benefits Payments			
		H & W	Pensions	Vacation	Education and/or Appr. Tr.
Air conditioning mechanic	4.83				
Bricklayers	6.00				
Carpenters	4.90				
Carpet Layers	5.47				
Cement masons	5.00				
Drywall Finisher	5.00				
Drywall hanger	5.50				
Electricians	4.64				
Insulation Installer	3.90				
Laborers:					
Laborers, unskilled	3.26				
Painters, brush	4.50				
Painters, spray	4.00				
Plumbers	5.16				
Roofers	4.35				
Sheet metal workers	6.00				
Soft floor layers	5.41				
Tile setters	5.51				
Truck drivers	3.90				
Welders - rate for craft.					
POWER EQUIPMENT OPERATORS:					
Backhoe	4.43				
Bulldozer	3.75				
Grader op.	3.99				
Loader	4.88				
Paver Operator	4.09				

SUPERSEDEAS DECISION

STATE: OHIO COUNTY: LUCAS
DECISION NO.: OH79-2064 DATE: Date of Publication
Supersedes Decision No. OH78-2168, dated December 29, 1978 in 43 FR 61196
DESCRIPTION OF WORK: Building and Residential Construction Projects

	Basic Hourly Rates	Fringe Benefits Payments			
		H & W	Pensions	Vacation	Education and/or Appr. Tr.
ASBESTOS WORKERS	$13.88	.55	1.40		.04
BOILERMAKERS	13.575	1.075	1.00		.03
BRICKLAYERS; MARBLE SETTERS & Stonemasons	13.175	1.06	1.40		.01
CARPENTERS; MILLWRIGHTS & Piledrivermen	13.70	1.20	.75		.05
CEMENT MASONS	14.99	.60			.02
ELECTRICIANS:					
Commercial	13.80	.65	3%+.55		.1%
Residential	8.28	.65	3%+.55		.1%
ELEVATOR CONSTRUCTORS:					
Elevator Constructors	13.225	.745	.56	a+b	.035
Helpers	70%JR	.745	.56	a+b	.035
Helpers (Prob.)	50%JR				
GLAZIERS	12.675	.70	1.00		.01
IRONWORKERS	13.59	1.06	1.34		.06
LATHERS	13.76	1.20	.10		.01
LINE CONSTRUCTION:					
Linemen	14.26	.50	3%	c	½%
Cable Splicers	14.51	.50	3%	c	½%
PAINTERS:					
Commercial:					
Brush; Drywall Tapers; Paperhangers	11.28	1.06	1.10		
Bridge; Railings; Powerhouse; Refinery Tanks	11.53	1.06	1.10		
Sandblasting; Spray; Pressure Cleaning	11.83	1.06	1.10		
Residential Work	10.14	1.06	1.10		
PLASTERERS	14.65	.60			.01
PLUMBERS; STEAMFITTERS; PIPEFITTERS	13.13	1.10	1.05		.09
ROOFERS	13.34	1.20	1.00		.02
SHEET METAL WORKERS	13.155	1.20	1.57		.045
SOFT FLOOR LAYERS:					
Commercial	12.03	1.20	.75		.04
Residential	10.03	1.20	.75		.04
SPRINKLER FITTERS	12.75	.75	1.05		.08
TERRAZZO WORKERS; TILE SETTERS	13.19	1.20	.50		
TERRAZZO WORKERS' FINISHERS & Tile Setters' Finishers	11.00	1.06	.40	.50	

DECISION NO. OH79-2064

PAID HOLIDAYS:
A-New Year's Day; B-Memorial Day; C-Independence Day; D-Labor Day; E-Thanksgiving Day; & F-Christmas Day

FOOTNOTES:
a. Seven Paid Holidays: A through F, & Day after Thanksgiving
b. Employer contributes 8% of regular hourly rate to vacation pay credit for employee who has worked in business more than 5 years. Employer contributes 6% of regular hourly rate to vacation pay credit for employee who has worked in business less than 5 years.
c. Ten Paid Holidays: A through F, Good Friday, Day after Thanksgiving Day, Christmas Eve, & New Year's Eve.

	Basic Hourly Rates	Fringe Benefits Payments			
		H & W	Pensions	Vacation	Education and/or Appr. Tr.
LABORERS:					
Unskilled Laborers	$11.16	.80	.80		.11
Mason Tenders	11.29	.80	.80		.11
Gunnite Pot Men; Mortar Mixers	11.36	.80	.80		.11
Concrete Pump Nozzle Men; All Power Driven Tools; Power Buggies	11.315	.80	.80		.11
Pipe Layers; Bellmen; Bottom Men for Fire Brick Work Only	11.415	.80	.80		.11
Nozzle Operators for Gunnite Work	12.07	.80	.80		.11
Plasterers' Tenders	11.18	.80	.80		.11

DECISION NO. OH79-2064

POWER EQUIPMENT OPERATORS:	Basic Hourly Rates	Fringe Benefits Payments			
		H & W	Pensions	Vacation	Education and/or Appr. Tr.
GROUP A	$13.69	.71	1.00		.11
GROUP B	13.53	.71	1.00		.11
GROUP C	13.18	.71	1.00		.11
GROUP D	12.37	.71	1.00		.11
GROUP E	12.04	.71	1.00		.11
GROUP F	9.83	.71	1.00		.11

GROUP A - A-Frame; Rotary Drills Used on Caisson Work for Foundations and Sub-Structure Work; Boiler or Compressor Operator Mounted on Crane (Piggyback Operation); Boom Truck (All Types); Cableways; Cherry Pickers; Combination Concrete Mixer and Tower; Concrete Pumps; Cranes (All Types); Derricks (All Types); Draglines; Dredge (Dipper, Clam or Suction) 3 Man Crew; Elevating Grader or Euclid Loader; Floating Equipment; Gradalls, Helicopter Operator and Helicopter Winch Operator when Hoisting Builders Materials; Hoes (All Types); Hoisting Engines (Two or More Drums); Lift Slab or Panel Jack Operator; Locomotives (All Types); Maintenance Engineer (Mechanic or Welder); Mixers Paving (Multiple Drum); Mobile Concrete Pumps with Boom; Panelboard (All Types on Site); Pile Driver; Power Shovels; Side Booms; Slip Form Pavers; Straddle Carriers (Building Construction on Site); Hammerhead Tower Cranes; Trench Machines (over 24" Wide); Tug Boat

GROUP B - Asphalt Paver; Bulldozer; C.M.I. Type Equipment; Endloaders; Kohlman Type Loaders (Dirt Loading); Lead Greaseman; Mucking Machines; Power Grader; Power Scoops; Power Scrapers; Push Cat

GROUP C - Air Compressor (Pressurizing Shafts or Tunnels); Asphalt Rollers; Fork Lifts; Hoist (One Drum); House Elevators; Man Lift; Power Boilers (Over 15 lbs. Pressure); Pump Operators Installing Well Points or Other Type of Dewatering System; Pumps (4" and over discharge); Submersible Pumps (4" and over discharge); Trenchers 24" and under

GROUP D - Compressors on Building Construcion; Conveyors (Building Material) Generators; Gunnite Machines; Mixers (Capacity more than one Bag); Mixers (One Bag Capacity, Side Loader); Post Driver; Post Hole Digger; Pavement Breaker (Hydraulic or Cable); Road Widening Trencher; Rollers; Welder Operator

GROUP E - Backfillers & Tampers; Batch Plant; Bar and Joint Installing Machines; Bullfloats; Burlap and Curing Machines; Clefplanes; Concrete Spreading Machines; Crushers; Deck Hands; Drum Firemen (Asphalt); Farm Type Tractors Pulling Attachments; Finishing Machines; Form Trenchers; High Pressure Pumps over ½" Discharge; Hydro Seeders; Self-Propelled Power Spreader; Self-Propelled Subgrader; Tire Repairmen; Tractors Pulling Sheeps Foot Roller or Grader; Vibratory Compactors (With Integral Power)

GROUP F - Oiler; Helper; Signalman; Inboard & Outboard Motor Boat Launch; Light Plant Operator; Power Driven Heaters (Oil Fired); Power Boilers (less than 15 lbs. Pressure; Pumps Under 4" Discharge; Submersible Pumps Under 4" Discharge

SUPERSEDEAS DECISION

STATE: South Carolina COUNTIES: See below*
DECISION NUMBER: SC79-1105 DATE: Date of Publicatio
Supersedes Decision No.: SC76-1088 dated August 27, 1976 in 41 FR 36399
DESCRIPTION OF WORK: Residential Construction Projects consisting of single family homes and garden type apartments up to and including 4 stories.

*Counties: Clarendon, Darlington, Dillon, Florence, Lee, Marion, Marlboro, Sumter, and Williamsburg.

	Basic Hourly Rates	Fringe Benefits Payments			
		H & W	Pensions	Vacation	Education and/or Appr. Tr.
Air conditioning mechanic	5.72				
Bricklayers	5.00				
Carpenters	5.00				
Carpet layers	5.25				
Cement masons	5.00				
Dry wall finishers	5.00				
Dry wall hangers	4.00				
Electricians	5.00				
Insulation Installers	4.00				
Ironworkers	4.02				
Laborers:					
Laborers, unskilled	3.00				
Mason tenders	3.40				
Pipelayers	3.10				
Painters, brush	5.00				
Plasterers	5.75				
Plumbers & pipefitters	5.11				
Roofers	5.00				
Sheet metal workers	4.10				
Soft floor layers	4.00				
Tile setters	6.50				
Truck drivers	3.00				
Welders - rate for craft					
POWER EQUIPMENT OPERATORS:					
Backhoe	5.00				
Bulldozer	5.00				
Loader, front end	3.27				
Mechanics	4.75				
Motor grader	4.41				
Pans - scrapers	5.00				

SUPERSEDEAS DECISION

STATE: South Carolina COUNTIES: Lexington & Richland
DECISION NUMBER: SC79-1101 DATE: Date of Publication
Supersedes Decision No.: SC76-1126 dated October 29, 1976 in 41 FR 47907
DESCRIPTION OF WORK: Residential Construction Projects consisting of single family homes and garden type apartments up to and including 4 stories.

	Basic Hourly Rates	Fringe Benefits Payments			
		H & W	Pensions	Vacation	Education and/or Appr. Tr.
AIR CONDITIONING MECHANICS	$ 5.75				
BRICKLAYERS	6.00				
CARPENTERS	5.58				
CEMENT MASONS	5.25				
DRYWALL FINISHERS	6.00				
DRYWALL HANGERS	5.00				
ELECTRICIANS	5.56				
GLAZIERS	5.10				
INSULATORS	4.06				
IRONWORKERS	5.25				
LABORERS:					
Asphalt rakers	3.50				
Laborers, unskilled	3.44				
Pipelayers	4.18				
LATHERS	6.30				
PAINTERS, BRUSH	4.93				
PLUMBERS & PIPEFITTERS	6.13				
ROOFERS	4.00				
SHEET METAL WORKERS	4.76				
SOFT FLOOR LAYERS	4.50				
TILE SETTERS	6.00				
TRUCK DRIVERS	3.44				
WELDERS - Rate for craft.					
POWER EQUIPMENT OPERATORS:					
Backhoes	4.50				
Bulldozers	4.44				
Front End Loaders	4.38				
Motor graders	4.25				
Rollers	4.53				

[FR Doc. 79-20699 Filed 7-5-79; 8:45 am]
BILLING CODE 4510-27-C

federal register

Friday
July 6, 1979

Part V

Consumer Product Safety Commission

Interim Safety Standard for Cellulose Insulation; Cellulose Insulation Labeling Requirement

CONSUMER PRODUCT SAFETY COMMISSION

16 CFR Part 1209

Interim Safety Standard for Cellulose Insulation

AGENCY: Consumer Product Safety Commission.

ACTION: Amendment to standard.

SUMMARY: In this document the Commission amends its interim safety standard that addresses the flammability and corrosiveness of cellulose insulation. A recently enacted law required the Commission to publish that standard, which is based on a General Services Administration (GSA) Specification for cellulose insulation. The law also required the Commission to propose an amendment to its standard based on a related revision GSA made to its Specification. After considering comments and other available information on the proposed amendment and after consulting with the Department of Energy, the Commission is amending the interim standard. The Commission is taking this action since it has found, as required by law, that the available information does not show that the amendment is not necessary for the protection of consumers from the unreasonable risk of injury associated with flammable or corrosive cellulose insulation. The Commission also has found that the available information does not show that implementation of the amendment will create an undue burden on persons who are subject to the standard.

DATE: Cellulose insulation manufactured after October 15, 1979 must comply with the requirements of the revised standard including the labeling requirement. Cellulose insulation manufactured before October 16, 1979 must continue to meet the requirements of the interim standard based on GSA Specification HH-I-515C (43 FR 35240, August 8, 1979).

FOR FURTHER INFORMATION CONTACT: Wade D. Anderson, Directorate for Compliance and Enforcement, Consumer Product Safety Commission, Washington, D.C. 20207 (301) 492-6400.

SUPPLEMENTARY INFORMATION:

I. Background

On July 11, 1978, the "Emergency Interim Consumer Product Safety Standard Act of 1978," Pub. L. 95-319, became law. This legislation amended the Consumer Product Safety Act (CPSA) (15 U.S.C. 2051 et seq.) by adding a new section, section 35, that required the Commission to issue an interim consumer product safety standard for cellulose insulation based on the requirements for flame resistance and corrosiveness in the General Services Administration (GSA) Specification HH-I-515C, as effective February 1, 1978.

As required by the statute, the Commission, on August 8, 1978, published the interim consumer product safety standard addressing the flame resistance and corrosiveness of cellulose insulation (43 FR 35240). The interim standard became effective September 8, 1978, so that insulation manufactured after September 7, 1978, must comply with the standard.

The "Emergency Interim Consumer Product Safety Standard Act of 1978" also provides that until a final consumer product safety standard is in effect, the Commission must publish for public comment amendments to the interim standard to incorporate each revision GSA issues that supersedes the requirements for flame resistance and corrosiveness in GSA Specification HH-I-515C. The Commission may make appropriate changes in the GSA revisions before proposing the amendment for public comment. The Commission must issue the amendment unless the Commission determines, after consulting with the Secretary of Energy, that the amendment is not necessary to protect consumers from the unreasonable risk of injury associated with flammable or corrosive cellulose insulation or that implementation of the amendment will create an undue burden on persons who are subject to the interim consumer product safety standard.

The General Services Administration has informed the Commission that, effective June 15, 1978, it has issued GSA Specification HH-I-515D. Since this specification contains requirements for flame resistance and corrosiveness for cellulose insulation that supersede the requirements of GSA Specification HH-I-515C, the Commission is required by Pub. L. 95-319 to publish the flame resistance and corrosiveness provisions of HH-I-515D as a proposed amendment to the interim standard.

After the proposed amendment has been published, the act provides 30 days for interested persons to submit comments. Within 90 days after the end of the 30-day public comment period, the Commission must either publish the amendment as a final amendment or withdraw the proposal.

On September 6, 1978, the Commission published a notice of intent to propose an amendment to the interim standard (43 FR 39720). The notice of intent included the flame resistance and corrosiveness provisions of HH-I-515D and solicited comments on these provisions and related issues. On March 8, 1979 the Commission published a proposed amendment to the interim standard based on the flame resistance and corrosiveness provisions of HH-I-515D, along with changes made by the Commission (44 FR 12872).

In addition to publishing the proposed amendment, the Commission also proposed a certification rule under section 14 of the CPSA (15 U.S.C. 2063) (44 FR 12684, March 8, 1979). Elsewhere in this issue of the Federal Register, the Commission has published a final certification rule, which becomes effective October 16, 1979, the same date that the amendment becomes effective. The certification rule prescribes requirements that manufacturers, private labelers, and importers must follow to certify that their products comply with the amended interim standard. The certification rule contains requirements for conducting a reasonable testing program, for recordkeeping, and for certifying. The requirements will assist manufacturers, private labelers, and importers in complying with the amended interim standard and will also help the Commission monitor compliance with that standard.

Elsewhere in this issue of the Federal Register, the Commission has also published a final rule under section 27(e) of the CPSA (15 U.S.C. 2076(e)) that would require manufacturers of cellulose insulation to include labeling on their product concerning the proper installation of cellulose insulation to prevent fires. The labeling requirements under section 27(e) also becomes effective October 16, 1979.

II. Description of the Amendment

The amendment to the interim standard, 16 CFR Part 1209, prescribes flame resistance and corrosiveness requirements for cellulose insulation manufactured for use as a consumer product. The amendment to the interim standard applies to all such cellulose insulation manufactured after October 15, 1979. The requirements of the amendment are intended to reduce or eliminate an unreasonable risk of injury to consumers from flammable and corrosive cellulose insulation. Cellulose insulation manufactured before October 16, 1979 but after September 7, 1978 must comply with the interim standard based on HH-I-515C.

As provided by Pub. L. 95-319, the amendment contains the flame resistance and corrosiveness provisions of GSA Specification HH-I-515D (with several changes discussed below), since these provisions supersede the requirements for flame resistance and corrosiveness in GSA Specification HH-I-515C.

The Commission has not included the following paragraphs of HH-I-515D in the amendment since these paragraphs do not contain provisions superseding the requirements for flame resistance and corrosiveness in GSA Specification HH-I-515C: Paragraph 1, *Scope and Classification;* paragraph 2, *Applicable Documents;* paragraph 3, *Requirements;* 3.1 *Material;* 3.1.1 *Qualification;* 3.1.3 *Starch;* 3.1.4 *Thermal Resistance;* 3.1.5 *Moisture Absorption;* 3.1.6 *Odor Emission;* 3.1.8 *Fungi Resistance;* 3.2 *Marking;* 3.2.3 *Workmanship;* paragraph 4, *Quality Assurance Provisions;* 4.1 *Responsibility for Inspection;* 4.2 *Classification of Inspections;* 4.3 *Qualification Tests;* 4.4 *Sampling for Qualification Tests;* 4.5 *Quality Assurance Inspection;* 4.6 *Sampling;* 4.7 *Examination Tests;* 4.8.2 *Thermal Resistance;* 4.8.3. *Moisture Absorption;* 4.8.4 *Odor Emission;* 4.8.6 *Fungi Resistance;* 4.8.9 *Starch;* 4.9 *Quality Assurance Test Methods;* 4.9.3 *Thermal Resistance;* paragraph 5, *Preparation for Delivery;* paragraph 6, *Notes.*

A. Scope and Application

Section 1209.1 of the amended interim standard describes its scope and application. The amended interim standard contains requirements based on GSA Specification HH-I-515D that are intended to reduce or eliminate an unreasonable risk of injury to consumers from flammable and corrosive cellulose insulation.

As does the current interim standard, the amended interim standard applies to cellulose insulation that is a consumer product, that is, insulation produced or distributed for sale to or for the personal use, consumption, or enjoyment of consumers in or around a permanent or temporary household or residence, a school, in recreation, or othewise. The amended interim standard applies to cellulose insulation that is produced or distributed for sale to consumers for their direct installation or use, as well as insulation that is produced or distributed for installation by professionals. As required by section 9(d)(1) of the Consumer Product Safety Act (CPSA)(15 U.S.C. 2058(d)(1)), the amended interim standard applies only to cellulose insulation manufactured on or after the effective date of the amendment (October 16, 1979).

B. Definitions

Section 1209.2(a) of the amendment defines the consumer product covered by the amended interim standard. For purposes of the amended interim standard, "cellulose insulation" means cellulosic fiber, loose fill, thermal insulation that is suitable for blowing or pouring applications. Like the present interim standard, the definition in the amendment is a broad definition. The definition does not specifically exclude insulation installed using the "wet process" method of installation ("Wet process" insulation is blown into an area with a spray or mist of water applied at the nozzle during installation) or insulation installed using a spray-on process with wet or dry adhesives.

The Commission intends wet process and spray-on insulations to be included within the scope of the amendment since they fall within the general definition of cellulose insulation. As provided in this definition, these insulation materials are made of cellulosic fiber and are thermal insulation suitable for blowing application. Although these insulation materials are generally not "loose fill" materials after application, they are loose fill materials before installation and may be installed as loose fill insulation. The Commission will test wet process and spray-on insulation as loose fill insulation under the amendment. However; if wet process or spary-on insulation is applied as intended, the Commission recognizes that the test procedures of the amendment may not directly correlate with or allow persons to assess the true flame resistance properties of the materials after application.

Because of these concerns, in the proposal the Commission specifically included wet process insulation in the definition of cellulose insulation and asked for the comments on the definition and on the issue whether spray-on types of insulation should be specifically excluded from the definition (44 FR 12873-12874, March 8, 1979). In response to the proposal, the Commission did not receive any comments presenting information showing that these insulation materials should be included or excluded from coverage under the amendment. If interested persons believe that these types of insulation should be tested under some other test procedure, these persons may petition the Commission to exclude them from the amendment and to issue a rule containing different requirements and test procedures. Before the Commission would consider such a proposed rule, the petitioner must present evidence demonstrating that the test method recommended by the petitioner adequately addresses the flammability hazard presented by these types of insulation when applied as intended. Even if such a regulation were adopted, the Commission would still test the insulation in its loose fill state and require the insulation to meet the flame resistance requirements of the amendment as presently issued, unless individual manufacturers demonstrated that the insulation was not, in fact, installed as loose fill insulation.

C. Corrosiveness Provisions

The amendment includes requirements and test procedures for the corrosiveness of insulation. (See §§ 1209.3(a) and 1209.5 of the amendment.) As provided by Pub. L. 95-319, these provisions are based on the corrosiveness provisions of GSA Specification HH-I-515D, which revised the corrosiveness provisions of GSA Specification HH-I-515C. The Commission has made several changes in the provisions, as discussed below. The test method of the amendment provides that insulation test specimens are saturated with distilled or deionized water and are placed in contact with thin metal coupons. Aluminum, copper, and steel coupons are used. The saturated insulation and metal coupon assembly (also referred to as a composite specimen) is placed in a forced air humidity chamber at high temperature and high relative humidity for 14 days. Subsequently, the coupons are removed from the composites, cleaned, and examined over a light bulb for perforations. If any metal coupon is observed to have any perforation (excluding notches which extend into the coupon 3 mm or less from any edge), then the insulation fails the corrosiveness requirement.

The corrosiveness test method of the present interim standard differs from the test method of the amendment in the procedure for preparing the metal coupons and insulation specimens, the type of coupons used in the test, the amount of time the specimens are left in the humidity chamber, and the coupon post-cleaning. The amendment requires that the corrosiveness test method and the smoldering combustion test method (described below) be conducted using the results of the measured settled density of the cellulose insulation. At § 1209.4 the amendment includes a test procedure for determining settled density. This test method for

determining settled density uses a cyclone-shaker and is different than the blown density test method in the current interim standard (at § 1209.7). As explained in section III of this preamble concerning Commission changes, the cyclone-shaker test method is also different from the test method for determining settled density at paragraph 4.8.1 of HH-I-515D.

D. Flame Resistance Provisions

The amendment would supersede the flame resistance provisions of the present interim standard by replacing these provisions with two new requirements and procedures for determining flame resistance: the requirement and test procedures for critical radiant flux (see sections 1209.3(b) and 1209.6 of the amendment) and the requirement and test procedures for smoldering combustion (see sections 1209.3(c) and 1209.7 of the amendment).

The present interim standard based on HH-I-515C requires cellulose insulation to have a flame spread rating not greater than 25 when tested in a Steiner tunnel. Insulation must also pass a flame resistance permanency test that uses the Steiner tunnel and a smaller, two foot, version of the tunnel. The tunnel test measures how quickly a given material burns. The amendment replaces the tunnel test with the attic floor radiant panel and smoldering combustion tests. These two tests evaluate the fire performance of cellulose insulation by specifying both open flame and smoldering ignition sources to better simulate real-life conditions.

The attic floor radiant panel test is designed to measure the resistance of a material to surface burning under realistic conditions. To accomplish this, the test uses a panel to generate heat which is directed toward the surface of the test specimen. The amount of heat received by the specimen decreases as the distance from the heat source increases. The specimen is ignited at the hot end by a small pilot burner; and, if the flames propagate, the specimen burns toward the cool end. After the flames have extinguished, the person conducting the test measures the extent of burning present on the specimen. The person conducting the test then converts and reports this measurement as "critical radiant flux." The amendment requires all test specimens to have a critical radiant flux equal to or greater than 0.12 W/cm2 (Watts per square centimeter) in order to pass the test. At § 1209.8 the amendment includes a procedure for calibrating radiation instrumentation used in the test procedure for critical radiant flux.

The requirements and test procedures for smoldering combustion in the amendment are designed to determine the potential of a material to undergo sustained smoldering combustion when exposed to a moderate heat source. A lit cigarette (lit end up) is placed in a small specimen of conditioned insulation (at settled density) in an open-top stainless steel box. The specimen holder is weighed before the test, first without, and then with, the test specimen. The cigarette and specimen are allowed to burn for at least two hours or until the smoldering has ended. After the smoldering has ended, the specimen holder and any residue are weighed, and the percent weight loss of the original specimen is calculated. In order to pass the requirements of the amendment for smoldering combustion, the insulation must have no evidence of flaming combustion and a weight loss of 15 percent or less of the initial weight of each of the specimens tested.

The amendment does not include the flame resistance permanency requirements of the present interim standard, since flame resistance permanency has been eliminated from the revised GSA Specification HH-I-515D.

E. Labeling Provisions

The present interim standard, at section 1209.9, requires manufacturers and private labelers to place the following statement on their containers of cellulose insulation: "Attention: This material meets the applicable minimum Federal flammability standard. This standard is based upon laboratory tests only, which do not represent actual conditions which may occur in the home." As provided by Pub. L. 95-319, this label requirement remains in effect only for insulation subject to the interim standard based on HH-I-515C. The amendment, at § 1209.9(a), includes a label requirement to enable persons to distinguish insulation that meets the requirements of the amended standard. The label states: "This product meets the amended CPSC standard for flame resistance and corrosiveness of cellulose insulation." This label requirement replaces the label requirement of the present interim standard for insulation manufactured after the effective date of the amended standard.

The amendment provides that manufacturers may use any type of label, including a pressure sensitive or glued on label, to meet this requirement provided the label is made and attached in such a manner that it will remain attached to the insulation container and be legible for the expected amount of time between the manufacture of the product and its installation. The amendment, at § 1209.9(b), specifies the size of the label and requires the label to be printed in legible type in a color which contrasts with the background on which the statement is printed. Unlike the present interim standard, which included a reference to CPSC regulations under the Federal Hazardous Substance Act for designing a label that is prominent and conspicuous, § 1209.9(b) specifies the size of the label in order to eliminate confusion.

Elsewhere in this issue of the Federal Register, the Commission has published a rule under Section 27(e) of the CPSA that requires manufacturers of cellulose insulation to label their products with information concerning the proper installation of cellulose insulation to avoid potential fire hazards.

Manufacturers may combine the labeling statement required by the amendment issued here, the certification rule, and the installation labeling required under Section 27(e) in the same label.

F. Certification and Enforcement

As explained in § 1209.10(a), section 14 of the CPSA (15 U.S.C. 2063) requires any manufacturer or private labeler of a product subject to a standard to certify that the product conforms to the standard. The certification must be based on either a test of each product or a reasonable testing program. Elsewhere in this issue of the Federal Register, the Commission has issued a certification rule that provides certification requirements.

As explained at § 1209.10(b), the Commission intends to use the test procedures in the amendment to determine whether insulation complies with the standard.

G. Effective Date

At §1209.11, the amendment provides that all cellulose insulation that is a consumer product and that is manufactured after October 15, 1979, must meet the requirements of the amended standard. (For the purposes of this regulation, the cellulose insulation product is manufactured when the insulation is packaged in the bag or container intended to be sold to the installer or consumer. Insulation that is not sold in bags or containers is manufactured when the insulation leaves the manufacturing site to be sold.) The Commission believes that this

effective date is reasonable since the requirements of the amendment, including the labeling requirements, can be met within the period from July 6, 1979 through October 15, 1979 and since the amendment will be in effect before the height of the 1979 purchasing season.

III. Commission Changes to the Flame Resistance and Corrosiveness Provisions of HH-I-515D

Section 35(c)(2)(C) of Pub. L. 95-319 authorizes the Commission to make changes in the flame resistance and corrosiveness provisions of HH-I-515D in order to make these provisions suitable for issuance as an amendment to the interim standard. The legislative history of the act indicates that the Commission could modify the existing test methods in HH-I-515D or develop a new test method for flame resistance or corrosiveness in order to ensure reproducible results, adequately simulate a home situation, or deal with a problem that is not adequately addressed by the GSA revision. The Commission may also make technical nonsubstantive changes, such as numbering changes, correction of typographical errors, and the addition of tolerances, to ensure that the revision is suitable for issuance as a mandatory product safety rule (H.R. Rept. No. 95-1322; 95th Cong., 2d Sess. 13(1978) and H.R. Rept. No. 95-1116; 95th Cong., 2d sess. 7-8(1978)). The Commission describes below the changes it has made in HH-I-515D in issuing this amendment, along with the reasons for the changes.

Test procedures for determining settled density (§ 1209.4). At § 1209.4(a)(1), the Commission has substituted a new test apparatus and procedure for determining settled density in place of the test apparatus and procedure described at paragraph 4.8.1 of HH-I-515D. The new test method, the cyclone-shaker test method, was recommended by the Department of Energy after the Department of Energy conducted comparison studies between this test method and the settled density test method of HH-I-515D.

The CPSC engineering laboratory conducted comparison tests between the present test method of HH-I-515D (with slightly modified temperature and humidity conditions) and the cyclone-shaker test method of the amendment. The tests indicated that there were only minimal differences between results obtained using the two test methods. The Commission has no evidence to indicate that the cyclone-shaker test method is less reproducible or reliable than the test method in HH-I-515D.

The environmental conditioning apparatus, required in conjunction with the GSA settled density test, presently specified in paragraph 4.8.1 of HH-I-515D, is reportedly difficult to obtain and may have to be custom built. The conditioning chamber necessary to reproduce these environmental conditions would be expensive. The conditioning chamber would also have a limited capacity, which would restrict the number of specimens that could be tested during the 28 day conditioning period.

The Commission believes that the change should result in a test procedure that is easier, less expensive, and less time consuming for the manufacturer and testing laboratory. The conditioning requirement in the amendment is identical to the conditioning requirements for the smoldering combustion test and the attic floor radiant panel test, so there is no need to purchase additional equipment for measuring settled density. In addition the change will allow settled density to be determined within a matter of several days instead of the minimum 28 days presently specified in HH-I-515D.

The Commission has included two figures in the amendment (figures 1 and 2) showing the settled density apparatus. These figures were not included in HH-I-515D.

Test procedures for corrosiveness. (§ 1209.5). The Commission has included the following changes in the amendment concerning the test procedures for corrosiveness:

(1) At § 1209.5(a)(1), the Commission has changed the wording of the requirement for the humidity chamber in HH-I-515D to describe the humidity chamber as a "forced air" humidity chamber. The present wording of paragraph 4.8.5 of HH-I-515D does not describe the humidity chamber as a forced-air type. GSA has advised the Commission staff that GSA has conducted tests using the forced-air humidity chamber in developing the GSA Specification HH-I-515D and has consistently interpreted the humidity chamber as a forced-air humidity chamber. To better ensure that all testing laboratories will be using the same humidity chamber systems, the Commission has specified a forced-air humidity chamber. The Commission believes that most testing laboratories already have available and frequently use such forced-air systems.

(2) Throughout § 1209.5, the Commission has changed the type of dishes for the composite test specimens from "evaporating" to "crystallizing" This change has been made so that the type of dish is consistent with current laboratory practices and with the present interim standard. The change will also allow the test coupons to be centered more easily in the insulation specimens. The change has been made at § 1209.5(a)(2) and at several places in § 1209.5(b) of the amendment.

(3) Throughout § 1209.5, the Commission has changed the term test "specimens" to test "coupons" to describe the thin metal squares that are used to evaluate corrosiveness. This change has been made since the word "coupon" more accurately describes these metal squares and eliminates possible confusion with the "specimens" of cellulose insulation. The change has been made at § 1209.5(a)(3), and at several places in § 1209.5(b).

(4) At § 1209.5(a)(4) the Commission has changed the description of the "Insulation Sample" in paragraph 4.8.5 of HH-I-515D to specify that six insulation test specimens shall be used for one test, and that each specimen shall weigh 20 g. This change has been made in order to clarify the number of specimens to be used and to provide a full description of the test specimens at one place in the standard.

(5) At § 1209.5(b) the Commission has included a new procedure for cleaning the metal coupons. The Commission has included this change in the amendment since the cleaning procedures in paragraph 4.8.5 of HH-I-515D may result in incomplete removal of grease and surface contaminants and may lead to poor reproducibility of test results. The cleaning procedure in paragraph 4.8.5 of HH-I-515D is inadequate to achieve the necessary water-break free surface criterion to ensure that the metal coupons are clean. To ensure that the coupons would not be contaminated during handling, the Commission has specified that coupons not be touched by ungloved hands. The Commission has specified that chemicals used in the cleaning process be of a reagent grade free of oily residue and other contaminants, since different qualities of solvents are available. Solvents that are of low grade quality may not effectively clean the metal coupons.

(6) At § 1209.5(b) the Commission has changed the procedure for preparing the insulation test specimens and the description of the method for calculating the quantity of distilled or deionized water to be used with each specimen. The Commission has also included an instruction that persons conducting the test should exercise care in preparing the composite specimens to eliminate air pockets from forming next to the metal coupons. These changes are intended to

reasonably ensure that homogeneous specimens are obtained, thus addressing variability due to possible separation of dry chemicals from the cellulose insulation and variables associated with the formation of air pockets. The changes should improve the reproducibility of the test method.

(7) At § 1209.5(b), the Commission has included a statement providing that care should be taken to avoid evaporation of water from the time when the specimen is being prepared until the time when the specimen is placed in the humidity chamber. The purpose of this change is to minimize possible variations in test results that may occur from evaporation.

(8) At § 1209.5(b), the Commission has included a clarification that the specimen preparation be repeated for all metal coupons to avoid any possible confusion.

(9) At § 1209.5(b) the Commission has changed the amount of time the specimens are to remain in the humidity chamber from 14 days to 336±4 hours to clarify the time frame in which the test is considered to be complete.

(10) At § 1209.5(b) the Commission has included a clarifying statement that any opening of the humidity chamber door be kept to a minimum while the composite specimens are placed in and removed from the humidity chamber. Although it is necessary to open the door of the humidity chamber to put new specimens into the chamber or take tested specimens out of the chamber, opening the doors should be kept to a minimum since opening may lead to fluctuations of the temperature and humidity. Therefore, the purpose of this change is to avoid possible variations in test results that may occur as a result of variations in the controlled temperature and humidity conditions of the humidity chamber.

(11) At § 1209.5(b) the Commission has clarified the test procedure to provide that, after the test is completed, the metal "coupons" should be brushed with a "soft nylon bristle brush or equivalent" to remove loose corrosion products. The use of the "soft nylon bristle brush or equivalent" has been included since the use of a hard bristle brush could artificially cause perforations that were initiated but not completed during the corrosion test.

(12) At § 1209.5(b) the Commission has changed the procedure for removing the remaining corrosion products from the metal coupons to provide that these coupons be cleaned in accordance with specified practices identified in "ASTM G 1—Standard Recommended Practice for Preparing, Cleaning, and Evaluating Corrosion Test Specimens" (American Society for Testing and Materials, 1916 Race Street, Philadelphia, Pa. 19103). The procedure in HH-I-515D for removing corrosion products calls for a simple nitric acid dip. The Commission's change would allow post-cleaning of the metal coupons by methods which substantially reduce removal of intact metal and provide for more accurate evaluation of the corrosion the test coupons may experience. The Commission has also included a cautionary statement concerning the safe preparation of the cleaning solutions used for cleaning the coupons after the test.

(13) At § 1209.5(c) the Commission has changed the procedure for determining noncorrosiveness to exclude notches which extend into the coupon 3 mm or less from any edge. (The Commission had proposed that notches extending 1 mm or less be excluded.) The Commission believes that this change will minimize variations in judgment that may occur in determining noncorrosiveness. The notches frequently represent effects on the edges of the coupons occurring because of coupon preparation rather than corrosion from the test specimens, and should not be used in judging corrosiveness.

(14) At § 1209.3(a) and § 1209.5(b) the Commission has changed the procedure for examining the metal coupons to eliminate the requirement that the coupons be examined under a "chrome reflected" light bulb. The reason for this change is that the Commission believes that a 40-W appliance light bulb without a chrome reflector is sufficient for examining test coupons for perforation.

(15) At § 1209.3(a) the Commission has provided that no perforation "of any of the six" 3 mil metal "coupons" shall be evident. The change has been made to clarify that the metal coupons are examined, rather than the specimen of insulation.

(16) Throughout § 1209.5 the Commission has made numerous technical non-substantive changes, such as editorial changes, the addition of tolerances, the use of consistent measurement units and the inclusion of equivalent units, to ensure that the amendment is suitable for issuance as a mandatory safety standard.

Test procedures for critical radiant flux (§ 1209.6). The Commission has included the following changes in the amendment concerning the test procedures for critical radiant flux:

(1) At § 1209.6(a) the Commission has added the words "or equivalent" after the words "an air-gas fuel radiant heat energy panel". This addition has been made since it may be possible for improved panels to be developed which will produce test results that are in agreement with the test results obtained using the specified panel. At the present time, however, the Commission is not aware that an equivalent panel is available.

(2) At § 1209.6(b)(1) the Commission has replaced "Marinite XL" with "Marinite I" in order to correct an error in HH-I-515D.

(3) At § 1209.6(b)(2) the Commission has included a provision that would allow for alternative gas and air mixing systems. Since the standard provides that these gas and air mixing systems must be equivalent to the venturi-type system specified in HH-I-515D, the use of alternative systems would not affect test results.

(4) At § 1209.6(b)(2) the Commission has deleted the requirement that the test chamber shall be capable of operating at temperatures up to 816° C (1500° F). The Commission has deleted this phrase since the Commission does not believe that it is necessary to specify a maximum operating temperature for this apparatus. The maximum operating temperature is not related to ability of the apparatus to test cellulose insulation.

(5) At § 1209.6(d) the Commission has deleted a section entitled "typical examples" under the heading "Test Specimens" since the examples are not an essential part of the standard and do not clarify the test procedure. Also, in this section the Commission has added the requirement that three specimens per sample shall be tested since the Commission believes that three specimens are necessary and sufficient for statistical reliability.

(6) At § 1209.6(d) the Commission has included a different method for preparing specimens of insulation intended for pneumatic applications. HH-I-515D and the proposed amendment provided that the test specimens intended for pneumatic application are blown into the tray through a commercial blower using 100 feet of 2 inch flexible blower hose. In its experience with this method, the Commission has found that the method is cumbersome since it requires the use of a separate room for blowing the insulation and produces a large volume of dust in the atmosphere. The method in the amendment for preparing these specimens provides for the blower/cyclone apparatus in section 1209.4(a) to be used in installing the specimens in the specimen tray. The Commission believes that this method will ensure uniformity in preparing these specimens

and provides for a relatively easy and convenient method of preparing the specimens. The Commission has made the change since the blower/cyclone method in the amendment produces the same results as the method in HH-I-515D, yet requires less equipment for testing and does not produce as much dust as the method in HH-I-515D.

(7) At § 1209.6(e) the Commission has added the statement "In a continuing program of tests, the flux profile shall be determined not less than once a week. Where the time interval between tests is greater than one week, the flux profile shall be determined at the start of the test series." The Commission has added this statement to assist in obtaining a flux profile in accordance with the standard where tests are conducted at infrequent intervals.

(8) At § 1209.6(f) the Commission has deleted the requirement that specimens be conditioned "a minimum of 48 hours." The amendment requires conditioning to equilibrium, with a less than 1 (one) per cent change in net weight of the specimen in two consecutive weighings, with a minimum of two hours between each weighing. The Commission believes that these changes should ensure proper conditioning of the specimens.

(9) At § 1209.6(g) (2) and (3) the Commission has specified that the amount of time the pilot burner flame must contact the test specimens be changed from "5 minutes" to "2 minutes". Based on its experience with the test method, the Commission believes that if the specimen is going to ignite it will ignite within the first 2 minutes.

(10) Throughout § 1209.6, the Commission has also made numerous technical nonsubstantive changes such as numbering changes, correction of typographical errors, and the addition of tolerances, to ensure that the amendment is suitable for issuance as a mandatory safety standard.

(11) The Commission has not included figures 1 and 2 of HH-I-515D in the amendment, since these figures, which are photographs of the radiant panel, are not likely to be printed with sufficient clarity. These figures may be seen in the Office of the Secretary of the Commission.

The Commission has included three additional figures: 5, 6, and 7, in the amendment. Figure 5 (proposed as figure 5b) shows the basic component interrelationships of the attic floor radiant panel apparatus and shows the zero reference point related to the detecting plane of the apparatus. Figure 6 (proposed as Figure 7) shows the dummy specimen. Figure 7 (proposed as Figure 8) replaces Figure 6 of HH-I-515D. This drawing provides clarification of the requirements of Section 1209.6(b)(4) which gives the specimen tray dimensions. The Commission has not included Figure 9 of HH-I-515D, which shows the dummy specimen holder and dummy specimen tray, since the dummy specimen holder and dummy specimen tray are shown in Figures 5 and 6.

Test procedures for smoldering combustion (§ 1209.7). The Commission has included the following changes in the amendment concerning the test procedures for smoldering combustion:

(1) At § 1209.7(a)(1) the Commission has specified that the glass fiberboard required as a pad in the test be unfaced. The Commission believes that in order to obtain reproducible results in the test it is necessary to specify a standard substrate on which to place the specimen holder. The insulating medium used in the development of this test method and for the weight loss criterion chosen was unfaced glass fiberboard of the dimensions specified in the amendment. The Commission believes that this change should increase the reproducibility of the test method.

(2) At § 1209.7(b)(1) the Commission has revised the procedure for loading the test specimen into the specimen holder as follows: "The material shall be blown, combed, or otherwise mixed to remove lumps and shall be loaded uniformly into each specimen holder, level and flush to the top of the holder". The purpose of this revision is to provide some assurance that the specimen will be distributed uniformly in the specimen holder. The change should eliminate possible variations in test results that may occur if the material is not distributed uniformly in the specimen holder. The Commission has also revised the procedure for loading the test specimen into the specimen holder to provide for a removable extension top to be placed on top of the holder. This change will increase the height of the sample holder and avoid creating layers of insulation with different densities. The change will avoid the effects on test results of density variations.

(3) At § 1209.7(b)(1) the Commission has added the phrase "whichever period is longer" in order to clarify the duration of the test.

(4) At § 1209.7(b)(2) the Commission has clarified the procedure for determining the net weight of the content of the specimen holder at the conclusion of the test.

(5) At § 1209.7(b)(2) the Commission has changed the provision for allowing the specimen holder to cool down from "25° C" to "approximately room temperature". The Commission believes that this change is consistent with the requirement that the test area be maintained at 21± 3° C, and should not affect test results. The change will make it easier to conduct the test.

(6) At § 1209.7(b)(3) the phrase "Three specimens per sample shall be tested" has been added to the amendment. The Commission has chosen three specimens to be consistent with the critical radiant flux determination. For the critical radiant flux determination, the Commission believes that three specimens are necessary and sufficient for statistical reliability. This change is intended to eliminate confusion as to the number of specimens per sample to be tested.

(7) Throughout § 1209.7 the Commission has also made technical nonsubstantive changes, such as numbering changes, correction of typographical errors, and the addition of tolerances, to ensure that the amendment is suitable for issuance as a mandatory safety standard.

IV. Response to Comments

In response to the proposed amendment to the interim standard (44 FR 12872, March 8, 1979) the Commission received thirty-six timely comments and twelve late comments from manufacturers, trade associations, independent testing laboratories, Federal and State Government agencies, consumers, and other interested persons. These comments are available for inspection in the Office of the Secretary of the Commission. As stated in the proposal (44 FR 12889) the short amount of time provided by statute for considering comments made it impractical for the Commission to formally respond to late received comments. However, the Commission considered all of the late received comments within the limited time available. In some instances, where there was sufficient time to evaluate suggestions made in the late comments, the Commission was able to include suggestions made by the late commentors in the amendment. The short amount of time (30 days) for commenting on the proposed amendment was provided by Section 35(c)(2)(F) of the act. In order to provide additional time for the public to present its views on what action the Commission should take to amend the standard, the Commission published a notice of intent to propose the

amendment on September 6, 1978 that included much of the content of the proposed amendment and that solicited comments on this content. The Commission considered all timely comments before publishing the proposed amendment. The Commission also mailed copies of the proposed amendment to an extensive list of cellulose insulation manufacturers and other interested persons to provide them with direct notice of the proposal and with the greatest possible amount of time to submit comments.

In the Congressional *Conference Report* on Pub. L. 95–319, the conferees stated their expectation that any member of the public who objects to the proposed amendment will make available to the Commission whatever information is necessary in order for the Commission to fully analyze the impact of the amendment (H.R. Rept. No. 95–1322, 95th Cong., 2d Sess. 8 (1978)). As emphasized in the *Conference Report*, the Commission must issue the amendment unless the Commission finds that the amendment is not necessary or will create an undue burden. Many of the commentors raised concerns about the amendment but did not provide substantiation; or requested that the Commission include changes in the amendment without submitting information supporting these changes. However, the Commission attempted to address all of these comments by analyzing information available to it, and, when possible, by conducting tests. However, as indicated in the responses to comments, in many instances the Commission could not independently verify the concerns of the commentors by conducting research or tests to develop the needed information to support the change recommended by the commentor because of the statutory requirement that the Commission issue the amendment within 90 days after the close of the comment period. As a result, the Commission did not include unsubstantiated changes suggested by the commentors. As explained in detail in the response to comments, the Commission believes that all of the major technical issues raised by the commentors have been satisfactorily resolved. If interested persons believe that the amendment should be changed after it is published, these persons may petition the Commission to make these changes in the amendment. Petitions must include information and data that substantiate the suggested changes.

An explanation of the relevant issues raised by the timely comments, along with the Commission's response, is given below:

Settled density. GSA Specification HH–I–515D contains test requirements and procedures for determining settled density. In the amendment, at Section 1209.4, the Commission has included a new test procedure for determining settled density which is called the cyclone-shaker test method. An explanation of the new method for determining settled density and the reasons for the change are stated in the section of this Federal Register notice titled: *III. Commission Changes to the Flame Resistance and Corrosiveness Provisions of HH–I–515D.*

In response to the proposed amendment the Commission received the following comments concerning settled density:

One commentor suggested that the Commission include the proposed cyclone-shaker method for determining settled density in the final rule. Another commentor stated that since this new settled density test may not represent actual conditions in a home the test should not be included as part of the amendment.

The Commission agrees with the commentor who recommended that the settled density determination be included in the final rule. Before GSA adopted the 28 day settled density test method specified in HH–I–515D, NBS conducted a series of comparisons analyzing the results of the HH–I–515D settled density test and data obtained by the Canadian Research Council concerning the settled density of cellulose insulation in actual homes. These comparisons showed that the density of cellulose insulation in actual homes approximated the settled density values obtained in the test specified in HH–I–515D. The CPSC engineering laboratory and DOE have conducted comparison tests between the test method of HH–I–515D and the cyclone-shaker test method of the amendment. The tests indicated that there were only minimal differences between results obtained using the two test methods. Therefore, the Commission believes that the cyclone-shaker test method approximates the settled density of insulation installed in homes. In addition, as explained earlier in this notice, the cyclone-shaker test method is less expensive and less time consuming than the test method of HH–I–515D.

One commentor criticized the ability of the apparatus, prescribed at § 1209.4(a), to break up the insulation in the settled density test procedures at section 1209.4(a). According to the commentor, the apparatus is overly complex and unsuitable for use in a laboratory. The commentor expressed doubt whether the proposed apparatus would be effective in breaking up the insulation, and recommended that the Commission include the Thermtron method instead. Another commentor requested that the Commission include the Custom Scientific Instruments model CS204 apparatus (Thermtron method) as an alternate test method for settled density. According to the commentor, there is reasonable correlation between the proposed test method and the Thermtron method for determining settled density. The commentor stated that the CS204 test metod has been developed by two industry task groups and has been subjected to interlaboratory round robins. According to the commentor, excluding the CS204 test method would cause unnecessary economic losses to the companies and organizations currently owning and using the apparatus for the CS204 test method. The commentor stated that the CS204 test method would cost no more than the test method in the proposed amendment.

At § 1209.4(a) the amendment recognizes that persons conducting the settled density test may use devices that produce results that are equivalent to the device specified by the Commission. Although the data submitted by the commentors indicates that the CS204 apparatus produces test results that are equivalent to the results obtained using the apparatus specified in the amendment, the Commission has not verified the data submitted by the commentors. The CS204 apparatus, and other apparatus, could be used if the apparatus produce results that are equivalent to results obtained using the cyclone-shaker apparatus specified in the amendment. However, for purposes of compliance testing, the Commission will use the settled density test procedures specified in the amendment. Based on Commission staff experience in conducting the test, the Commission does not believe that the settled density test procedures at § 1209.4(a) are overly complex or unsuitable for use in a laboratory. The Commission's staff experience also indicates that the apparatus for breaking up the insulation is effective in breaking up the insulation when the intake hose is gently spread over the surface of the insulation and not forced into the insulation. The Commission is aware of data which shows that the apparatus in the amendment may have an effect on the density when the insulation is repeatedly reblown. However, since the test procedures of the amendment only require one blowing, this one blowing should have no effect on test results.

One commentor criticized the replacement of the drop box humidity cycle settled density test in HH-I-515D with the cyclone-shaker test for determining settled density. According to the commentor, the cyclone-shaker overestimates the settled density of cellulose insulation made from pressure refined wood chips. The commentor stated that the test in HH-I-515D produces results that compare closely to the settled densities found in installed insulation. The commentor suggested that the Commission either exempt wood fiber insulation from the cyclone-shaker test or use a factor to correlate settled density obtained using the drop box humidity cycle settled density test with settled density obtained using the cyclone-shaker test method.

The commentor did not submit any data in the comment in support of the allegation concerning the settled density of cellulose insulation made from pressure refined wood chips. Based on its experience in conducting the settled density test of the amendment, the Commission believes that cellulose insulation made from wood fiber can be tested under the test procedure in the amendment. At the present time the Commission does not have data concerning the settled density of wood fiber insulation and the effects of different test methods on the settled density of wood fiber insulation. Because of the lack of sufficient data, the Commission is unable to exempt wood fiber insulation from the cyclone-shaker test of the amendment or recommend a factor to correlate the settled density of wood fiber insulation obtained using the test method in HH-I-515D with settled density obtained using the cyclone-shaker test method. The commentor may petition the Commission to propose a rule including a different method for determining the settled density of wood fiber insulation or a correlation factor for wood fiber insulation. Before the Commission would propose such a rule, however, the Commission must have information substantiating the recommended changes.

One commentor stated that the blower used in the settled density test at § 1209.4 is unsatisfactory for cellulose insulation made with cotton fibers, since this type of cellulose insulation chokes the blower.

Based on its experience in conducting the settled density test specified in the amendment, the Commission believes that cellulose insulation can be tested under the method in the amendment. In testing this type of cellulose insulation, laboratories participating in Commission sponsored round robin tests have not reported any problems with the insulation choking the blower of the test apparatus. The Commission staff experience with testing cellulose insulation made with cotton fibers, as well as other types of insulation, indicates that satisfactory results are obtained if the insulation is fed slowly into the supply hose while taking care to break up lumps.

One commentor recommended that the settled density test procedure at § 1209.4(a)(1) specify a standard four liter laboratory glass beaker to be used as the glass insulation specimen container. According to the commentor, the containers specified in the proposal at § 1209.4(a)(1) are not generally available and would be unnecessarily expensive.

At § 1209.4(a)(1), the Commission has changed the specification for the insulation specimen container to provide a dimension with a tolerance for the distance between the bottom of the cyclone and the top edge of the beaker.

The Commission has also eliminated the requirement that the container be made of glass. Based on its experience in conducting the test, the Commission does not believe that these provisions are necessary or would affect test results. The Commission believes that it is necessary to specify that a straight sided container be used, rather than a laboratory beaker with a flared lip, in order to simplify the calculation of the volume of the container which is used in determining density. The Commission does not have any information, and the commentor has not provided any information, showing that the container specified in the amendment is not generally available or is unnecessarily expensive.

One commentor suggested that the Commission specify the height of the insulation specimen container used in the settled density test procedure at § 1209.4(a)(1). According to the commentor, variations in the height of the container can affect the density of the material in the container. The commentor recommended that the container be 12 inches high, to give a settled depth representative of the depth at which the material might be used.

The Commission has addressed the concern expressed by the commentor by changing the amendment at § 1209.4(a)(1). In order to eliminate any effects of the height of the container or the density of the material in the container, the Commission has changed section 1209.4(a)(1) to specify that the distance between the bottom of the cyclone and the top edge of the beaker is 8.5 cm ± 1.0 cm. The Commission believes that the falling distance of the specimen from the bottom of the cyclone to the top of the beaker can influence test results. The Commission believes that the dimensions specified in the amendment sufficiently address this variable. The commentor has not presented any information and the Commission does not have available any information showing that the height of the container should be specified as 12 inches, in place of the dimension in the amendment.

Several commentors pointed out an error at § 1209.4(a)(5). According to the commentors, the displacement of the shaker unit in the settled density test should be 0.5 inch peak to peak instead of 0.1 inch. One commentor recommended that the section include a procedure for verifying the amplitude of the shaker unit.

The Commission agrees with the commentors and has made appropriate changes at § 1209.4(a)(5) concerning the displacement of the shaker unit. Since there are many different methods for verifying amplitude that are accurate, the Commission does not believe that it is necessary to specify a method in the amendment. Although § 1209.4(a)(5) does not include a procedure for verifying the amplitude of the shaker unit, the Commission believes that persons conducting the test may use any method that they consider satisfactory.

One commentor requested that the Commission substitute the term "designed density" for "settled density" at § 1209.4. The Commission believes that the term "settled density" should be retained at § 1209.4, since "settled density" describes a particular condition of the insulation material measured by the test method.

One commentor stated that the Commission should use the same method for determining settled density that the FTC uses for determining R-value, or thermal resistance. The commentor suggested that once the R-value is established for a product, the R-value should be used for all tests conducted for the product. According to the commentor the Commission's regulations should require one independent testing laboratory to use the certified R-value density test results of another certified independent testing laboratory.

The Commission agrees with the commentor that it would be helpful to manufacturers if the settled density test for R-value (thermal resistance) determination prescribed by the FTC were the same as the settled density test for the flame resistance tests. The

Commission staff has recommended that the FTC allow manufacturers to use the cyclone-shaker test method of the amendment as a method for determining settled density used in R-value determinations. Based on present information the Commission believes that the FTC will allow manufacturers to utilize the same settled density test method for determining R-value that the Commission uses in the amended interim standard. The Commission does not agree with the suggestions of the commentor that the established R-value density should be used in all tests for the product, or that the Commission should require one independent testing laboratory to use the R-value test results of another independent testing laboratory. The R-value density for a material is not an appropriate parameter for all flammability testing. When cellulose insulation is first installed, the density of the insulation is considerably less than when the insulation is settled. For those tests that are density sensitive, the Commission believes that the test should be run at the "worst case" conditions that will be found in the field. The settled density test conditions specified for the flame resistance tests represent the "worst case" conditions that will be found in the field.

Requirements and test procedures for corrosiveness. The amendment includes requirements and test procedures for corrosiveness at § 1209.3(a) and § 1209.5. In response to the proposed amendment, the Commission received the following comments concerning these requirements and procedures:

One commentor stated that the proposed test procedures for corrosiveness were not justified and were not an accurate accelerated test of the end use of the product.

As required by Pub. L. 95-319, the Commission has published proposed test procedures for corrosiveness based on the corrosiveness provisions of HH-I-515D to eliminate or reduce an unreasonable risk of injury to consumers from corrosive cellulose insulation. Based on the Commission staff experience with the corrosiveness tests of the present interim standard and the corrosiveness test of HH-I-515D, the Commission believes that the corrosion test in the amendment does differentiate the corrosive nature of various types of cellulose insulation. Based on presently available information, the Commission believes that the test method is at least as accurate an any other test method.

One commentor stated that the corrosiveness test requires further study since the laboratory test method has no relationship to conditions in the field where insulation is installed. Another commentor questioned the rationale for the corrosion testing, stating that there was a lack of knowledge concerning field experience.

Although there is a lack of information concerning the correlation of field experience to all corrosiveness tests, the Commission staff has had extensive experience with the corrosiveness test of the present interim standard and through NBS has had investigations performed on the corrosion test in the proposed amendment. Based on this experience, the Commission believes that the test method of the amendment will provide a means for rating the potential corrosiveness of different types of cellulose insulation. The Commission believes that the test method in the amendment is superior to the test method in the interim standard since the cleaning procedures are more effective and since the test is less subjective, is of shorter duration, is easier to conduct, and is less expensive than the present test.

One commentor stated that the corrosiveness test procedure is unrealistic since it over represents moisture that is likely to occur in cellulose insulation.

The Commission agrees with the commentor that the corrosiveness test over represents moisture that is likely to occur in cellulose insulation installed in the field. The test does this since it is an accelerated test, as are most tests for corrosiveness. As is normally the case in accelerated tests, including HH-I-515D and other accelerated tests for cellulose insulation, severe conditions are used to allow testing to be completed within a reasonable amount of time. Given the need to use an accelerated test with conditions that are sufficiently severe to enable the test to discriminate between corrosive and non-corrosive insulation, the Commission does not agree with the commentors that the test is unrealistic in the amount of moisture in the insulation specimens.

One commentor supported the proposed amendment with the exception of the corrosiveness test. According to this commentor, the 14 day corrosiveness test of the proposed amendment is meaningless since the most corrosive materials presently being used will not cause holes to appear in metals within 14 days. The commentor suggested that a 28 day test be used instead, in order to provide greater protection to the consumer.

Tests conducted by NBS and GSA indicate that there is good correlation between 14 day corrosion failures and 30 day corrosion failures, Based on this test information, the Commission believes that most insulation that fails the 30 day test method of the present interim standard will also fail the test method of the amendment, so that a longer test period is not necessary to protect consumers. Based on this testing experience, the Commission believes that the test method of the amendment is a meaningful test method.

One commentor questioned the reproducibility and consistency of the corrosiveness test.

Based on both a critique of cellulose insulation corrosiveness tests conducted by NBS and on Commission staff experience with the corrosiveness test procedure, the Commission believes that the changes in the corrosiveness test procedure in the amendment will reduce potential testing variables, thus making the test more reproducible. Information presently available to the Commission does not show that the test is not sufficiently reproducible for use as a mandatory standard. The National Bureau of Standards (NBS) is conducting an interlaboratory study on the corrosiveness test procedure. The results of this study will define the reproducibility of the test. If the results of the NBS study indicate that the test method is not sufficiently reproducible for use as a mandatory standard, or if the the Commission receives other information showing that the test is not sufficiently reproducible, the Commission will consider changes to the test method to provide sufficient reproducibility while maintaining the ability to distinguish between corrosive and non-corrosive insulation.

One commentor stated that the corrosiveness test is too rigid when compared to the existing corrosiveness tests for other types of insulation, especially for the thickness of coupons and the test method.

Insulation materials vary extensively in physical composition and characteristics. These differences may have great effects on the corrosive properties of the insulation, and make it difficult to compare corrosiveness tests for various types of insulation. The Commission believes that extensive additional work would be needed to assess whether the corrosiveness tests for other types of insulation are more representative of a home situation for cellulose insulation than the method specified in the amendment. At the present time, there is insufficient data to assess the predictive and discriminatory

capacities of corrosion tests for other types of insulation when applied to cellulose insulation. The test method in the amendment is based on the test method of HH-I-515D, as provided by the act. The commentor has not supplied information supporting a change to another test method. Presently available data does not justify changing this test method to incorporate a test method for other types of insulation.

One commentor requested that the Commission change the corrosiveness test so that test coupons 0.010 inch thick are tested for 240 hours (30 days). (The amendment at section 1209.5 provides that test coupons that are 0.003 inch thick are tested for 14 days.) The commentor suggests that if the weight loss of the coupons exceeded a specified percent, then the test would be continued for an additional 480 hours to determine the maximum allowable percent of weight loss.

The commentor has suggested a test method that is substantially different from the test method as proposed and included in the final amendment. The commentor has not provided technical substantiation for making these changes. The Commission has no evidence to indicate that the suggested changes are necessary or would result in a more accurate test method, or one that is more closely related to conditions in the field. At the present time there is insufficient data to define the corrosion loss or corrosion rate that would constitute failure in a test method such as the one suggested by the commentor. For these reasons, the Commission has not changed the amendment as suggested by the commentor.

One commentor suggested that a thicker test coupon be required, based on an NBS report that a thicker coupon should be adopted to eliminate improper judgments resulting from mechanical damage to the test coupon. Another commentor stated that using thin foil samples introduces difficulties and errors in conducting the corrosiveness test. The commentor claimed that local creases and stresses are inherent in the samples and cause inaccurate results.

The provision of the amendment for test coupons that are 0.003 inch thick to be tested for 14 days, is based on paragraph 4.8.5 of HH-I-515D. Although the thin coupons provided in the amendment are more difficult to work with than thicker coupons, the Commission does not believe that the thickness of the coupons has caused errors in test results. In addition, to provide more assurance of correct interpretation the Commission has revised the amendment to exclude notches at the edges of the coupons, since these notches may be attributed to the preparation of coupons rather than corrosion of the coupon due to the insulation sample. The NBS report referred to by the commentor did not recommend that a thicker test coupon be used with the corrosiveness test in the amendment. In order to use thicker test coupons, the Commission would be required to develop a different test method for assessing corrosiveness. The Commission does not have any evidence to show that such a test method would be more accurate or better correlated to field experience than the test method of the amendment.

Another commentor suggested that the Commission take steps to eliminate variables caused by obtaining test coupons from diverse sources.

Test coupons from different sources may have different surface residues present that may cause variables in corrosion results. The Commission has controlled variables that may be associated with residues on the coupons by providing flexibility in the method for cleaning the coupons. Based on its experience with these cleaning procedures, the Commission believes that the cleaning procedures in the amendment issued here are sufficient to address the differences due to residues on the coupons as a result of the manufacturing process. In order to further eliminate the possibility of variables, the Commission is also investigating the possibility that NBS could provide standard coupons for comparison with coupons obtained from other sources. However, if NBS does not provide standard coupons, the Commission believes that the provisions of the amendment for cleaning the coupons and assessing corrosiveness are sufficient to control variables that may be associated with the coupons.

One commentor suggested that the Commission specify a more realistic construction material than steel for one type of coupon at § 1209.5(a)(3)(iii) the corrosiveness test, since cold rolled steel is not commonly used as a construction material. The commentor suggested that the Commission require one type of coupon to be made of galvanized iron.

Although galvanized iron may be a more commonly used construction material than cold rolled steel, based on its experience in obtaining coupons for the test, the Commission believes that it may be difficult to obtain thin coupons of consistent quality made of galvanized iron. In developing HH-I-515D, GSA did not include galvanized iron coupons based on information showing that if galvanized iron coupons failed, the cold rolled steel coupons also failed. At the present time the Commission does not have sufficient information to change the provision in the test to delete steel coupons or to include galvanized iron coupons.

Two commentors stated that the proposed procedures for preparing and cleaning the metal coupons are complicated, extreme, impractical and unnecessary. Accordingly to one commentor, it may not be essential to remove all lubrication from the metal coupons since metal items likely to contact insulation in the field are manufacturing with a lubricated die process. The commentor suggested that washing the coupons with a mild detergent is sufficient to clean the coupons.

One commentor expressed concern that using caustic acid substances to preclean metal coupons could lead to problems in judging the extent of corrosion if these caustic acid substances are not completely removed before the corrosion test is conducted. The commentor suggested that a different cleaning method be used than the one in the proposed amendment. According to the commentor, metallographic powder used with solvent cleaning removes contaminants from the metals without causing the metals to become work-hardened, as suggested by some persons. The commentor stated that the cleaning procedures in the proposed amendment would take considerable time and would increase costs.

The Commission agrees with the commentors that the cleaning procedures in the proposed amendment should be revised. Recent data obtained using the cleaning procedures in the proposed amendment have shown that the proposed procedures may be inadequate with coupons from diverse suppliers. At § 1209.5(b)(1)(vii) the Commission has revised the pre-cleaning procedures to provide for cleaning by vapor degreasing with 1,1,1-trichloroethane for ten minutes followed by caustic and/or detergent washing as appropriate, followed by rinsing in water to obtain a water break-free surface.

Since corrosion is a phenomenon associated with the material and its environment, the Commission believes that cleanliness is an essential part of the corrosion testing procedure. Due to variability in contaminants or surface oils which may be present on coupons from diverse suppliers, the Commission has included in the amendment a more general cleaning procedure based on

recommendations of NBS, DOE contractors, and interested persons. The Commission believes that these changes will simplify the process for pre-cleaning the test coupons.

At the present time the Commission has not adopted the suggestion of one commentor that the amendment require cleaning using a metallographic powder.

The commentor has not presented information, and the Commission has no information establishing that the suggested method would not cause the test coupons to become work hardened. If work hardening occurs, corrosion may be accelerated, and may not accurately reflect the corrosive potential of the insulation.

One commentor stated that hot refluxed 1,1,1-trichloroethane (TCE) is sufficient to clean the test coupons in the corrosiveness test.

Studies performed in the Commission laboratories, and information supplied by NBS and DOE have shown that 1,1,1-trichloroethane is not adequate to consistently allow coupons to meet the water break-free criteria. The amendment, at section 1209.5(b)(1)(vii), provides for vapor degreasing with 1,1,1-trichloroethane followed by caustic and/or detergent washing as appropriate. The Commission believes that these procedures will be sufficient to allow the coupons to meet the water break-free criteria. The amendment at § 1209.5(b)(1)(vii) requires test coupons to meet the water break-free criteria, as specified in HH-I-515D.

One commentor agreed with the Commission's proposal to delete the nitric acid cleaning agent required in HH-I-515D, and stated that a single cleaning agent could be used to prepare all three types of coupons. According to the commentor, the test procedure at the end of the 14 day test should provide for one single cleaning agent or procedure. The commentor stated that simplification of the proposed preparation and cleaning procedure would greatly enhnce the reproducibility of results.

At § 1209.5(b)(6)(i), the amendment provides that a single cleaning procedure involving electrolytic cleaning may be used to post clean all three types of coupons. However, since some laboratories may not have access to electrolytic cleaning equipment, the Commission has included in the amendment the proposed alternate methods for post cleaning the coupons. These procedures are based on the recommended practice described in ASTM G-I. The Commission believes that all of these procedures provide acceptable results.

One commentor stated that cleaning coupons after the corrosiveness test is not nearly as important as cleaning the coupons before the test.

Although the Commission agrees with the commentor that cleaning coupons before the corrosiveness test may be more important than cleaning the coupons after the test, the Commission believes that post cleaning is important and should be included in the amendment. In cleaning the coupons after the test, it is essential that removal of intact metal be held to a minimum to prevent perforations which can result from the cleaning rather than from corrosion that may have occurred during the 14 day test period.

One commentor stated that when placing the coupons in the crystallizing dish, the person conducting the test must be careful to avoid air pockets, since air pockets will accelerate corrosion.

The Commission agrees with the Commentor. At § 1209.5(b)(4) the Commission has included an instruction in the test procedure so that persons conducting the test will exercise care in preparing the composite specimens to eliminate air pockets from forming next to the metal coupons.

One commentor stated that the determination of settled density at Section 1209.4 is unrelated to the corrosiveness test since the amount of distilled water for the test must be in proportion to the weight, rather than the volume, of the sample. According to the commentor, after saturating the sample with water and tamping it, the density of the sample loses its significance. Another commentor stated that the settled density determination should be eliminated since it is slowing down and causing confusion in the testing of the product.

The Commission believes that the settled density test for determining the amount of water used for saturation is desirable since the calculation based on the settled density determination will result in more uniform specimens. Calculating the amount of water based on the settled density allows for more uniformly saturated samples. Thus after the cacluated amount of water is added to insulation of high settled density, this insulation would have approximately the same consistency as an insulation specimen with a low settled density. At this time, the Commission does not believe that there is enough data to justify deleting the settled density test for determining the amount of water used for saturation. The Commission does not believe that the test is confusing since it involves a simple multiplication of a constant by 75 and division by the determined settled density.

One commentor questioned the requirement that a forced air humidity chamber should be used in the corrosiveness test, since an NBS report stated that more work needed to be done on the efficiency of the humidty chamber and since the Commission staff had recognized problems with positioning samples within humidity chambers. Several commentors agreed with the inclusion of the forced air humidity chamber in the corrosiveness test at § 1209.5(a)(1).

One commentor claimed that variability of corrosiveness test results is due primarily to variability of relative humidity above the saturated test specimen. According to the commentor, this variability can be greatly reduced by using a saturated solution of potassium sulfate in a closed system (instead of the forced air humidity chamber) to control the relative humidity at exactly 96%. The commentor submitted specific recommendations to improve the reproducibility of the corrosiveness test by eliminating environmental variables.

The Commission has specified the use of a forced air humidity chamber in the amendment to reduce variation in water loss experienced in different laboratories that may use static or individual sealed systems. Based on the Commission staff experience with the test method of the present interim standard, which uses a forced air humidity chamber, and Commission staff experience with the forced air humidity chamber, as proposed in the amendment, the Commission believes that the test method in the amendment is reproducible among different laboratories. The occurrence of evaporation in the forced air humidity cabinet also allows corrosion to occur in the presence of oxygen, which is the condition found in field use. The use of static chambers or individual sealed systems has been suggested only recently for use as a replacement for the forced air humidity chamber based on HH-I-515D. The data available with the use of such systems is limited to only a few select cellulosic fiber flame retardant chemical combinations. The Commission believes that further investigation of non-forced air humidity chambers is necessary to evaluate the desirability of these method sand their ability to discriminate between corrosive and non-corrosive insulation.

In a meeting with the Commission staff on May 22, 1979, after the close of the comment period, several persons have questioned the reproducibility of

the corrosiveness test, based on the use of the forced air humidity chamber and the specification that the chamber be capable of maintaining 48.9± 7°C (120± 3°F) and 97±1.5 percent relative humidity. According to these persons, forced air humidity chambers are not capable of consistently maintaining these temperature and humidity conditions throughout the test. These persons have claimed that this inability adversely affects the reproducibility of the corrosiveness test, and have recommended that the Commission use a sealed container instead of the forced air humidity chamber.

The Commission has had tests conducted by the equipment manufacturer on the forced air humidity chamber in the Commission's Chicago Laboratory. These tests show that forced air humidity chambers, which are commercially available, are able to maintain the specified temperature and humidity conditions throughout the test.

At the present time the Commission does not have sufficient information to require the use of a sealed container in the corrosion testing provisions of the amendment. The Commission believes that the adoption of a sealed container test method would represent a substantial change in the corrosion testing method provided in HH-I-515D and the proposed amendment and would raise several important questions. First, the sealed container test does not simulate actual conditions within an attic or wall of a building where thermal insulation becomes wet by condensation of water vapor or by leaks and then gradually dries out. The sealed container approach minimizes moisture losses by insulation test specimens, similar to a situation where a building structure does not dry out. Second, the sealed container system uses a saturated salt solution to maintain the relative humidity at 97±1.5 percent. However, procedures need to be developed for preparing the salt solution and for ensuring that the desired relative humidity is maintained. Third, the sealed system test method appears to be less severe than the present test method. In preliminary tests conducted by NBS using the sealed container test method, much less corrosion took place in 14 days than when the specimens were tested in a forced air humidity chamber, even when a very corrosive type of cellulose insulation was tested. Fourth, before the sealed system test could be adopted as part of a mandatory standard, the Commission believes that moisture or water loss associated with using a sealed container should be evaluated, along with the reproducibility of corrosion results, and uniformity of humidity adjacent to the test specimen.

Since the Commission must issue a final amendment by July 6, 1979, the Commission does not have sufficient time to conduct research and testing to address these issues concerning the suggested change. Based on available information, the Commission believes that the corrosiveness requirements and test procedures of the amendment are appropriate and sufficiently reproducible for use as a mandatory standard.

Interested persons who believe that the Commission should change the amendment to include a sealed container may petition the Commission to propose a rule including such a change. Before the Commission could propose such a rule, the Commission must have technical substantiation for the rule that adresses the questions discussed above concerning the sealed container. Interested persons must include such substantiation and a technical rationale in their petition.

To provide clear guidance for persons who may have questions about the reproducibility of the corrosiveness test, the Commission has asked its staff to explore whether it should specify additional procedures to improve the reproducibility of the test apparatus specified in the amendment. If so, the Commission staff will include these procedures in the test manual that the Commission staff will use for compliance test purposes. This test manual would also be made available to the public to provide information on the procedure the Commission uses in compliance testing.

Therefore, in addition to the fact that the Commission believes its prescribed test is appropriate and sufficiently reproducible for use as a mandatory standard, the Commission has insufficient information at the present time to require that the corrosiveness test at Section 1209.5 of the amendment be changed to require the sealed container test method.

One commenter supported the proposed corrosiveness test procedures at section 1209.5. The commenter suggested that the exclusion of 1 mm notches in determining corrosiveness as specified at § 1209.5(c) should be changed to exclude 3–4 mm notches in order to more accurately account for any stress from the edges of the coupon.

The Commission agrees with the commentor that the 1 mm notch exclusion should be increased. Based on its experience with testing under the present interim standard, the Commission believes that when notches or perforations are present at depths greater than 3 mm there are generally perforations in the interior areas of the coupon indicating a test failure. The purpose of excluding 3 mm notches as a criteria for failure is to take into account localized corrosion caused by coupon preparation, rather than corrosion from the test specimens. Therefore, the Commission has changed § 1209.5(c) to exclude notches that extend into the coupon 3 mm or less from any edge.

Several commentors expressed concern that the corrosiveness test procedure of the proposed amendment does not include "control" samples and recommended that the Commission adopt controls as part of the test procedure. According to one commentor, the control samples could remove subjectivity, ambiguity, inconclusiveness, and false positives or false negatives in test results. One commentor suggested that the Commission include control coupons in the corrosion test to address variables such as distilled water, oxygen, and the poor quality of the test coupons. Another commentor claimed that the proposed amendment, with the use of experimental controls, would remove the subjectivity inherent in the corrosiveness test of the present interim standard, which requires a subjective evaluation of the test coupons after 7 days of testing before conducting extended 30 day testing. According to the commentor, the 14 day test in the proposed amendment is more useful in gaining a more reasonable assessment of corrosiveness than the test procedure of the present interim standard.

The present interim standard requires the use of coupons for a subjective evaluation of the coupons at 7 days to determine the need for 30 day testing. The amendment based on HH-I-515D does not include a subjective evaluation of the coupons at 7 days, but instead bases the pass-fail criteria only on the presence or absence of perforations at the end of 14 days exposure. The Commission has no information that would indicate that control coupons are needed to address variables such as distilled water, oxygen, or the poor quality of test coupons. Since the use of control coupons would introduce subjectivity into the test method by requiring a subjective comparison between the control coupon and the test coupon, the Commission does not believe that control coupons should be included in the amendment.

One commentor disagreed with the Commission that perforation of metal coupons after the 14 day test should be the method for assessing corrosiveness.

According to the commentor, the most meaningful expression of corrosion data is a corrosion rate including units of weight, time, and depth of penetration per unit of time.

The commentor did not provide any evidence, and the Commission does not have evidence indicating that a method for evaluating corrosiveness based on the rate of corrosion is a more representative, repeatable, reproducible, or satisfactory method for evaluating corrosiveness than the criteria in the amendment. Changing the amendment to judge corrosion based on rates of corrosion would require the development of a totally new test method. The Commission has no information to indicate that such a test method would better correlate to field experience than the test method of the amendment. As a result, the Commission has not included in the amendment a method for evaluating corrosiveness based on the rate of corrosion.

One commentor claimed that the corrosiveness test procedure at § 1209.5(a)(3) contains an error in the description of the steel coupon, since no commercial steel contains 30 percent carbon. The commentor suggested that this section reference a specific type of steel with the proper carbon limits.

The Commission agrees with the commentors, and has included an appropriate change in the amendment.

Several commentors referred to a typographical error in describing the thickness dimension of the test coupons for the corrosiveness test at § 1209.5(a)(3). One commentor stated that the coupon thickness should be 0.003 in. instead of 0.0003 in.

The Commission agrees with the commentor, and has included an appropriate change at § 1209.5(a)(3).

One commentor stated that the chemicals used in the corrosiveness test could be described as Reagent rather than certified ACS Reagent at 1209.5(b)(1)(C).

The Commission agrees with the commentor and has made the appropriate change.

Several commentors suggested that the Commission prohibit manufacturers from using, as flame retardants, corrosive chemicals, such as aluminum sulfates, ammonium sulfates, aluminum trihydrates, gypsum, and copper sulfates. Another commentor claimed that there is no correlation between the use of pH of flame retardants present and the corrosive potential of insulation as measured by corrosion under either the 14 day or 30 day corrosiveness tests.

One commentor questioned whether commercial chemical premixes would be adequate to meet the requirements of the proposed amendment, since the premixes are corrosive. The commentor suggested that the Commission prohibit commercial premixes.

The Commission does not believe that it is necessary to prohibit the use of specific chemicals or commercial premixes, since the amendment includes performance requirements for corrosiveness. Cellulose insulation products that fail to meet these requirements would violate the standard. The Commission believes that attempting to prohibit the use of certain chemicals or certain combinations of chemicals would be impractical because of the many possible chemicals and combinations of chemicals that could be used to treat cellulose insulation, and would unduly restrict manufacturers of cellulose insulation in formulating their products.

Requirements and test procedures for critical radiant flux. The amendment, at § 1209.6, includes test procedures for critical radiant flux based on the test procedures at paragraph 4.8.7 of HH-I-515D. Section 1209.3(b) of the amendment requires cellulose insulation to have a critical radiant flux equal to or greater than 0.12 W/cm2 for each of the three specimens when tested in accordance with the test procedures. In response to the proposed amendment, the Commission has received the following comments on the requirements and test procedures for critical radiant flux:

One commentor criticized the attic floor radiant panel test for assessing the ability of cellulose insulation to ignite under conditions that are more severe than the real ambient condition in a heated attic, but less severe than the conditions where the consumer needs the most protection. Another commentor stated that the requirement in the attic floor radiant panel test that materials have a critical radiant flux equal to or greater than 0.12W/cm2 is unnecessarily restrictive.

The Commission does not agree with the commentors.

Cellulose insulation is commonly installed on attic floors. Most of the available fire incident data concerning cellulose insulation involves cellulose insulation installed in attics. The attic floor radiant panel test with a pass-fail criterion of 0.12W/cm2 simulates the exposure of insulation materials to a small attic fire under 71°C(160°F) air temperature conditions, which represent conditions that have been demonstrated by NBS to be worst case summer attic conditions, with an added safety factor. Insulation that can perform well under these worst case conditions will continue to perform well under less severe exposures. The attic floor radiant panel test is unlike conditions in an attic since the test exposes the insulation specimen to varying amounts of radiant energy to determine the fire performance of the insulation. However, there is no data to show that the fire performance of insulation is affected by this difference. Studies conducted by NBS show that in spite of this difference, the pass-fail criteria of the test approximates the energy flux level on the insulation under real life conditions with a 50 percent safety factor added. The Commission believes that the attic floor radiant panel test method adequately determines the ability of cellulose insulation to ignite under conditions presenting a risk of injury to the consumer.

The commentor who claimed that the attic floor radiant panel test does not represent conditions where the consumer needs the most protection did not explicitly state these conditions. However, the comment could be interpreted as referring to conditions where a fire starts within the living space and large flames spread to the attic. The attic floor radiant panel test is also applicable to situations where a fire starts within the living space and large flames spread to the attic. If the insulation has a critical radiant flux rating of 0.12W/cm2 or greater (meeting the requirements of the amendment). The insulation will not allow flames to spread from the area where penetration of the attic space occurred until the heat flux to the insulation surface exceeds 0.12W/cm2

The commentors have not presented any information showing that there is a need to decrease the minimum permissible critical radiant flux criteria of 0.12W/cm2, or that this requirement presents an undue burden on persons subject to the standard.

Several commentors stated that the attic floor radiant panel test has not been shown to relate to field experience or to full scale attic fire performance of cellulose materials. One commentor stated that the attic floor radiant panel test has not been shown to measure the potential for flame propagation during the incipient and developing stages of attic fires involving insulation. The same commentor stated that studies conducted at Underwriters Laboratories show that the results of the attic floor radiant panel test do not always indicate the performance of insulation materials in attic fires. According to the

commentor, the same studies have shown that the flame spread classification in the Steiner tunnel test method of the present interim standard represents the performance of insulation in all of the attic floor radiant panel test should not be substituted for the Steiner tunnel test method of the present interim standard until data are developed that correlate the attic floor radiant panel test, the Steiner tunnel test, and full scale attic simulations on the same cellulose materials.

The attic floor radiant panel test is a relatively new test, as applied to insulation. The Commission recognizes that field experience relative to the attic floor radiant panel test is limited, since manufacturers have only recently begun to evaluate their materials under the test within the past year.

Information available to the Commission indicates that the attic floor radiant panel test method measures the resistance to surface burning under realistic conditions and determines the minimum critical radiant flux necessary for flame propagation during the developing phase of an attic fire. Studies conducted by NBS show that the attic floor radiant panel test determines whether a small fire will spread under summer attic conditions of 71°C attic air temperature. The Commission has examined the U.L. studies referred to by the commentor. In these tests, U.L. conducted attic experiments at 70°F, 135°F, and 160°F and compared the fire performance of cellulose insulation samples with Steiner tunnel flame spread classifications of 25, 35, and 55 and corresponding critical radiant flux criteria of 0.16<0.10, and<0.10W/cm2. U.L. observed that the tests demonstrated that the Steiner tunnel was able to distinguish materials that did or did not propagate flames in the range of attic temperatures used. U.L. also observed that since the attic floor radiant panel test is not able to measure critical radiant flux less than 0.10W/cm2, the attic floor radiant panel test was not able to consistently predict which material did or did not propagate flames. From these observations, U.L. concluded that the substitution of the attic floor radiant panel for the Steiner tunnel test is not justified for attic ambient temperatures up to at least 160°F. The Commission does not agree with the commentor that the U.L. studies show that the attic floor radiant panel is not able to distinguish insulation that will or will not propagate flames under full-scale attic experiments. The attic floor radiant panel test was developed to assess the fire performance of cellulose insulation under likely summer attic conditions for attic insulation, where cellulose insulation is exposed to a small attic fire under 71°C (160°F) air temperature conditions. For this reason, the Commission believes that the most relevant fire tests from the data presented are those conducted at 71°C air temperatures, representing the worst case conditions for the attic insulation. In the tests conducted by U.L. at this temperature, all of the materials rated with a passing critical radiant flux at or above 0.12W/cm2 did not propagate flame in the attic, indicating that the attic floor radiant panel test is at least as capable as the Steiner tunnel test of distinguishing materials that propagate flames in attic fire tests. NBS has conducted large scale attic fire tests to determine if flame would propagate over the surface of cellulose insulation installed over the attic floor under simulated summer attic conditions. These tests show that the attic floor radiant panel test consistently predicted the fire performance of cellulose insulation under summer conditions in a large scale attic test.

One commentor stated that it is wrong to infer that the attic floor radiant panel test is suitable for insulation from the fact that during the development of the test procedure, the attic floor radiant panel test was shown to relate to full scale corridor fire tests representing later-stage fully developed fire conditions. The commentor stated that the limited and incomplete comparative full scale testing at NBS provides an insufficient data base to justify the use of the test for cellulose insulation.

The Commission agrees with the commentor that the historical development of the attic floor radiant panel test does not in itself mean that the test is suitable for assessing the fire performance characteristics of cellulose insulation. However, the rationale for applying the test to cellulose insulation is not based solely on the historical development of the test. Instead, this rationale was developed by NBS after extensive testing of cellulose insulation and an evaluation of the ability of the test to represent the worst case conditions under which cellulose insulation installed in attics may be ignited.

The attic floor radiant panel test provides a good simulation to predict if flame from a small ignition source will propagate over the surface of insulation material under summer attic conditions of 71°C attic air temperature. Since the attic floor radiant panel test is a good simulation of actual attic conditions, far fewer comparative full scale tests need to be performed to verify the reliance of the attic floor radiant panel test than are necessary to verify the applicability of a test such as the Steiner tunnel test. The Steiner tunnel test has many provisions which are substantially different from attic conditions where cellulose insulation is commonly installed. Therefore, the Steiner tunnel test depends entirely on correlation with full scale data for its application to cellulose insulation.

In the case of the Steiner tunnel test, some comparison testing between a full scale simulated attic and the Steiner tunnel was only recently initiated. This study, using data from only one Steiner tunnel apparatus does not show that the Steiner tunnel test is a better simulation of actual attic conditions than the attic floor radiant panel test.

One commentor claimed that the attic floor radiant panel test has a serious shortcoming since the test does not allow persons conducting the test to evaluate the extent to which failing materials fail the test. According to the commentor, this occurs since the calibration of the test apparatus compresses the test results on all materials to a very narrow range at the end of the test specimen. The commentor claimed that the attic floor radiant panel test, unlike the Steiner tunnel test, is not able to show trends or shifts in data concerning flame resistance. According to the commentor, if the attic floor radiant panel test method were adopted, the Commission would not be able to assess improvements in flame resistance characteristics of products over a period of time.

The Commission agrees with the commentor that because of the calibration of the attic floor radiant panel, the test is less capable than the Steiner tunnel test of evaluating the extent to which failing materials fail the test. Although the Commission does not agree with the commentor that this is a serious shortcoming in the test, the Commission staff is continuing to examine methods of recalibrating the test apparatus to show degrees of failure. The Commission staff may include a recalibration in a compliance test manual that would be publicly available, if there is sufficient technical substantiation for the recalibration.

The Commission does not believe it is critical that the attic floor radiant panel test be able to show the extent to which material having unacceptable flammability performance characteristics fails the test, since this material, having a critical radiant flux of less than 0.12 W/cm2 is in violation of the standard. Based on its experience

with the attic floor radiant panel test method and studies conducted by NBS concerning the test method, the Commission believes that the attic floor radiant panel test accurately identifies unsafe cellulose insulation materials and provides a relative performance measurement for acceptable materials. Available information shows that the attic floor radiant panel test is better able than the Steiner tunnel test to represent improvements in the fire resistant qualities of insulation that meets or exceeds the minimum acceptable level. The information presented by the commentor does not indicate that the Steiner tunnel test is better able than the attic floor radiant panel test to show the extent to which cellulose insulation materials exceed minimum flammability requirements, since all of the materials tested by the commentor had a flame spread classification equal to 25, the maximum permissible flame spread classification under the present interim standard. Although the Steiner tunnel test data from January 1976 through December 1978 has shown the "shift" or "trend" of declining flame spread classifications from approximately unacceptable flame spread classifications of "40" to acceptable flame spread classifications of "25", this shift or trend has been from unsatisfactory performance to borderline acceptable performance. Based on available information, the Commission believes that the attic floor radiant panel test will be better able than the Steiner tunnel test to show future improvements in the quality of insulation above the minimum acceptable performance level.

One commentor questioned the reproducibility of the attic floor radiant panel test, claiming that since results under the test would vary among laboratories the test is unsuitable for use as a mandatory standard. The commentor criticized the Commission's conclusions in the preamble to the proposed amendment that the test is reproducible, and criticized the Commission's interpretation of the round-robin test data concerning reproducibility. The commentor stated that in analyzing the test data concerning reproducibility the Commission should not have excluded data for a certain sample of insulation (material B) from the test results. The commentor also stated that the results of the round-robin testing program to determine the repeatability and reproducibility of the Steiner tunnel test should be compared with the round-robin testing program for the attic floor radiant panel test before the attic floor radiant panel test is adopted.

Information available to the Commission indicates that the attic floor radiant panel test method is sufficiently precise and reproducible for use as a mandatory standard. The commentor has not presented any data demonstrating that the Steiner tunnel test of the present interim standard is more reproducible than the attic floor radiant panel test. In fact, round-robin testing of cellulose insulation materials by NBS indicates that the reproducibility of the attic floor radiant panel test is superior to that of the Steiner tunnel test.

NBS is presently preparing a report on the tunnel round-robin testing. A preliminary comparison of data from this round-robin testing with data collected in the previous round-robin evaluation of the attic floor radiant panel test (Lawson, NBSIR 78-1588) shows that the attic floor radiant panel test has better repeatability and reproducibility than the Steiner tunnel test, and is adequately reproducible for us as a mandatory standard. For purposes of comparison, data presently available shows that the coefficient of variation for reproducibility, for testing treated commerical materials was 20.5% for the attic floor radiant panel test and 35.2% for the Steiner tunnel test. If untreated materials are included in the analysis of the Steiner tunnel test the coefficient of variation for reproducibility increases to 42.3%, or a variation twice as great as that of the attic floor radiant panel test. Based on presently available information, the Commission believes that the attic floor radiant panel test is significantly more reproducible than the Steiner tunnel test. In analyzing the round-robin test data concerning reproducibility, the Commission excluded data for a certain sample of insulation (material B), since the data were reported as failing test results having a critical radiant flux in a range of less than 0.12 W/cm2. The Commission excluded these data from the computation of reproducibility since the Commission would have had to arbitrarily assign a test value to the data in order to perform the statistical analysis. The Commission does not believe, and the commentor has not presented any information showing that the exclusion of this insulation sample from the statistical computation has affected the assessment of reproducibility for the attic floor radiant panel test.

Several commentors stated that the attic floor radiant panel test should not be substituted for the Steiner tunnel test method of the present interim standard. According to one commentor, although the attic floor radiant panel test evaluates cellulose insulation in a situation that more closely approximates real life than the Steiner tunnel, the fire safety of the insulation is related to the extent to which the insulation will support flamming combustion, a factor which is better assessed by the Steiner tunnel test. According to the commentor, the Steiner tunnel is a reasonably accurate means of determining the relative fire safety properties of cellulose insulation. The commentor stated that requiring the attic floor radiant panel test would create an unnecessary additional burden without serving any purpose in terms of consumer safety. Several commentors stated that as an alternative to eliminating the attic floor radiant panel test, the Commission should require cellulose insulation to have either a flame spread of 25 of less (as measured by the Steiner tunnel test), or a critical radiant flux equal to or greater than 0.12 W/cm2. One commentor requested the Commission to allow manufacturers to sell cellulose insulation with a flame spread classification of 50 or under when tested in the Steiner tunnel test method of the interim standard based on GSA Specification HH-I-515C. Another commentor requested the Commission to maintain the Steiner tunnel test of the present interim standard if the Commission adopts the attic floor radiant panel test method of the proposed amendment. According to the commentor, it is essential that sole dependence for fire safety not be placed on the radiant panel and smoldering combustion tests, since these tests are new and have limited field experience applicable to them, unlike the Steiner tunnel test.

The Commission does not agree with the suggestion of the commentors that the Steiner tunnel test should be retained in the interim standard either alone or in conjunction with the tests in the amendment. Based on available data concerning fire incidents associated with cellulose insulation, the major concern in evaluating the fire hazard presented by attic insulation is the ability to determine whether the insulation will allow flame to spread from a point of accidental ignition. By including the attic floor radiant panel test in the amendment, the Commission will ensure that insulation materials will resist flame spread up to a minimum of 0.12 W/cm2 heat flux applied externally to the surface. This provision ensures that no flame spread will occur from

small fires in the attic even under hot attic conditions, which are likely conditions of exposure for cellulose insulation. As indicated by one of the commentors, the attic floor radiant panel test evaluates materials under conditions that more closely approximately real life conditions than the Steiner tunnel test. On the other hand, the Steiner tunnel test does not attempt to simulate in any way the expected fire exposure conditions in an insulated attic space. The Commission believes that fire tests, such as the attic floor radiant panel test, that provide a good simulation of expected fire conditions are more reliable predictors of materials performances. In addition, in round-robin testing of cellulose insulation materials conducted by NBS, the reproducibility of the attic floor radiant panel test has been shown to be superior to that of the Steiner tunnel test, indicating that the attic floor radiant panel test provides a more consistent means of evaluating the fire performance of insulation materials than does the Steiner tunnel test. The commentors have not presented any information showing that the Steiner tunnel test would provided a greater degree of flammability protection than the attic floor radiant panel test, and have not shown that including the attic floor radiant panel test would present an undue burden on persons subject to the interim standard. Information available to the Commission indicates that the attic floor radiant panel test would not create an undue burden on persons subject to the test and is necessary to protect the public. The Commission does not believe that it is advisable to retain the Steiner tunnel test as an alternative to the attic floor radiant test since available information shows that the attic floor radiant panel test is a superior test for evaluating the fire performance of attic insulation. Only limited data exists to support the relationship between a flame spread classification of 25 or under obtained in the Steiner tunnel test and fire resistance of cellulose insulation in an attic space. As a result, classification of materials by the Steiner tunnel test is not meaningful for attic insulations. If the Steiner tunnel test were retained the Commission does not believe it would be advisable to allow manufacturers to sell cellulose insulation with a flame spread classification of 50 or under, as suggested by one of the commentors. The present interim standard requires cellulose insulation to have a flame spread classification of 25 or under when tested in the Steiner tunnel. Since flame spread classifications for untreated cellulose insulation materials have been measured at between 50 and 60, raising the maximum permissible flame spread classification to 50 would significantly lessen the flame resistance protection under the interim standard.

For these reasons, the Commission does not believe that the Steiner tunnel test should be retained in the interim standard for cellulose insulation.

One commentor stated that since the amendment requires each of three samples to have a critical radiant flux greater than 0.12 W/cm2, manufacturers would be required to design their product so that it would have a critical radiant flux of at least 0.22 W/cm2 in order to be certain of passing the test. According to the commentor, this action is required because the test has an average coefficient of reproducibility of 21 percent. To alleviate this problem, the commentor recommended that the Commission allow a tolerance on the 0.12 W/cm2 requirement and define standard test samples to assist in the calibration of test apparatus throughout the country.

As demonstrated in the round-robin test conducted by NBS (Lawson, NBSIR 79-1588), variations in test results conducted under the attic floor radiant panel test are related to the specific cellulose insulation tested. Different brands or lots of cellulose insulation can produce different levels of variation in test results. Because of this, it is not possible to establish a consistent minus tolerance limit on the requirement that materials have a critical radiant flux of 0.12 W/cm^2 or greater. The commentor has not shown that it is possible to establish such a tolerance on the critical radiant flux requirement of 0.12 W/cm^2 or greater. Based on available information, the Commission believes that the value of 0.12 W/cm^2 should be the lowest acceptable value. The Commission also does not believe it is desirable to rely on standard test samples to assist in the calibration of the test apparatus throughout the country, since any one standard test material can only provide a calibration check at one point of the flux profile.

One commentor criticized the attic floor radiant panel test for not including a provision to address the generation of smoke by cellulose insulation.

The present interim standard does not include the smoke generation provisions of the Steiner tunnel test method incorporated in GSA Specification HH-I-515C. As explained in the Federal Register notice issuing the present interim standard, the Commission does not believe that the smoke developed rating is part of the requirements for flame resistance or corrosiveness in GSA Specification HH-I-515C (43 FR 35242, August 8, 1978). Similarly, the Commission has not included the smoke developed rating in the amendment issued here since it is not part of the flame resistance or corrosiveness provisions of HH-I-515D. The attic floor radiant panel test method also does not include a provision addressing smoke generation because information presently available to the Commission does not indicate that there is a need for such a provision or that there is a relationship between measurements for smoke density and flame resistance. The commentor has not presented information showing that such a test requirement is needed and has not demonstrated that there is a satisfactory test method for addressing the generation of smoke by cellulose insulation. The smoke developed rating measurement of ASTM E-84 included in GSA Specification HH-I-515C does not necessarily establish a relationship between the density of smoke and its lethality. For example, although low levels of particulate matter may be detected from the combustion of some materials, giving a passing smoke development rating, the level of CO gas may be high. A frequently stated cause of death associated with fires is smoke inhalation of toxic gases, such as CO.

Several commentors questioned the applicability of the attic floor radiant panel test to cellulose insulation installed in side walls. One commentor asked the Commission to eliminate the radiant panel test method since the radiant panel is not relevant to testing insulation installed in side walls. Another commentor stated that the proposed amendment does not adequately address the flammability characteristics of cellulose insulation installed in the walls of a building. According to the commentor, the attic floor radiant panel test has no proven relationship to the fire behavior characteristics of wall insulation and represents a different type of ignition than the smoldering combustion test in § 1209.7 of the amendment. The commentor stated that applying the attic floor radiant panel test to cellulose insulation installed in walls could mislead the consumer in believing that the amendment provides flame resistance protection for cellulose insulation installed in walls.

The attic floor radiant panel test method was developed to address the fire performance of cellulose insulation installed on attic floors, the most common end use of the product and the most common location of cellulose

insulation involved in fire incidents. The attic floor radiant panel test is designed to characterize the ability of cellulose insulation materials installed on attic floors to ignite and propagate flames, and is a relevant simulation of possible fire conditions in an attic. Although the attic floor radiant panel test method has not been shown to be applicable to fire hazards associated with cellulose insulation installed in locations other than attics, the smoldering combustion test method, another flame resistance test method in the amendment, is applicable to cellulose insulation installed in locations other than attics. The smoldering combustion test method is applicable to cellulose insulation installed in wall spaces and other vertical configurations, as well as insulation installed in attics and other locations. The Commission is not aware of any other flame resistance test method that would be appropriate for cellulose insulation installed in wall spaces. The Commission believes that the attic floor radiant panel test is a necessary test and should be included in the amendment. The commentor has not presented any information showing that including the test in the amendment would be likely to mislead consumers.

One commentor criticized the Commission for relying on UL's data to support the applicability of the radiant panel test, while disregarding UL data concerning the Steiner tunnel test.

The test data generated by U.L. and considered by the Commission in proposing the amendment are as equally supportive of the attic floor radiant panel test as the Steiner tunnel test. However, these data do not demonstrate that the Steiner tunnel and attic floor radiant panel tests represent equivalent measurements of flammability properties, or that the Steiner tunnel test would provide a greater degree of protection than the attic floor radiant panel test. The Steiner tunnel test, unlike the attic floor radiant panel test, assesses the rate of flame spread of cellulose insulation, once ignition has occurred. On the other hand, the attic floor radiant panel test determines the conditions under which flame spread will not occur. Because of these differences, in many cases the evaluation of the suitability of materials for installation in attics based on the two tests differs. Cellulose insulation that ignites in an attic could cause injury regardless of how quickly the fire spreads, since attic fires may go undetected by the occupants of a house for a long period of time. Based on presently available information, the Commission believes that the attic floor radiant panel test, which has been shown to assess the conditions for flame spread to occur over cellulose insulation, is the more appropriate test to determine the suitability of cellulose insulation for attic installation.

One commentor criticized the reference in the preamble of the proposal to an NBS study showing that the Steiner tunnel test is invalid for certain low density materials, such as cellulose insulation. According to the commentor, the statement is inaccurate since it does not identify the nature of the full scale fire situation and since the statement provides no technical substantiation. According to the commentor, the Steiner tunnel test does provide valid data on flammability performance of low density material over a broad spectrum of fire conditions. The commentor stated that similar fire test data does not exist to substantiate the use of the attic floor radiant panel test for low density insulation.

The statement in the preamble to the proposal concerning the applicability of the Steiner tunnel test to low density materials was based on an NBS room fire study. In a series of full scale room fire tests conducted by NBS (NRC–NBS Cooperative Testing Program, June 1977) the flame spread classification (FSC) of 25 from the Steiner tunnel test was shown *not* to correlate with the spread or intensity of the room fire. In this series of tests a low density fire retardant plastic foam material with a FSC of 25 used as a wall lining caused flame spread over the entire surface of the room from a corner ignition source and room flashover in six minutes. A low density fiberglass material also with a FSC of 25, tested under identical conditions did not allow flame to spread from the corner containing the ignition source and did not produce flashover. These tests indicate that the ASTM E–84 Steiner tunnel test is not appropriate to characterize the fire performance of some low density materials. Furthermore, the coefficient of variation for reproducibility of the Steiner tunnel test on treated cellulosic insulations has been determined through round robin testing to be 35 per cent, which could be caused by variations when low density materials, such as cellulose insulation are tested in the Steiner tunnel. The attic floor radiant panel test has been shown to be more reproducible than the Steiner tunnel test.

One commentor criticized one aspect of the test methodology used by NBS, and stated that in conducting laboratory and attic tests referred to in the proposed amendment, NBS did not verify flame spread classifications in the Steiner tunnel test attributed by manufacturers to cellulose insulation samples.

Although NBS did not verify the flame spread rating stated on the insulation package when conducting the original series of attic tests referred to in the proposal, in the second series of attic tests conducted recently (*NBS-Flame Spread Tests on Cellulosic Insulation in a Large-Scale Attic*, dated April 16, 1979), NBS tested materials in the attic which had been evaluated in the Steiner tunnel round robin program. At the time these materials were tested in attic tests, Steiner tunnel flame spread classification data was available for these materials from six independent laboratories.

One commentor stated that the Commission's analysis of the results of Underwriter's Laboratories (U.L.) full scale attic fire studies in the proposal was highly subjective and represented unjustified excerpts from an August 8, 1978 U.L. technical note.

In issuing the proposed amendment, the Commission considered all of the relevant information in the U.L. full scale attic fire studies, as well as all other available relevant information concerning the issues in the proposed amendment. The Commission believes that its evaluation of the U.L. studies was objective and fair in light of all of the available information.

One commentor stated that the Commission's response to comments in the proposed amendment concerning the attic floor radiant panel was based on very limited technical substantiation, and was based solely on work at NBS that was carried out primarily to generate support for the test.

In preparing the responses to comments in the proposed amendment the Commission considered all available data relevant to the issues in the amendment, including reports supplied by manufacturers of cellulose insulation and independent testing laboratories. Although much of the available data was furnished by NBS, the Commission has no evidence that this data is inaccurate or biased. Available information shows that the NBS studies were objective and designed to fairly evaluate the criteria in the amendment. The Commission is not aware of any studies or test data from other laboratories that shows that the NBS studies are inaccurate.

According to one commentor, the proposed amendment represents an unjustified intrusion into private sector programs. The commentor stated that the Commission did not provide

manufacturers with sufficient time to develop private sector programs.

The proposed amendment was published as required under Pub. L. 95-319, "The Emergency Interim Consumer Product Safety Standard Act of 1978". In this legislation, Congress found that an urgent need exists for the expedited setting of interim mandatory Federal standards for the manufacture of cellulose insulation and that these standards are reasonably necessary to eliminate or reduce an unreasonable risk of injury to consumers from flammable or corrosive cellulose insulation. The time frames for issuing the proposed amendment are specified by Pub. L. 95-319. The test methods in the amendment are derived from voluntary standards developed by the private sector and test methods used by GSA Specifications. Although the attic floor radiant panel test is a new test compared to the Steiner tunnel test, industry members have had at least eighteen months since the introduction of the test for insulation to consider the test and its requirements.

One commentor criticized the attic floor radiant panel test, since the test method has not been adopted by any national standards developing organization as a fire performance test for insulation materials. According to the commentor, adoption of the test procedure by the National Fire Protection Association (NFPA) as a floor covering test does not justify its acceptance for insulation.

Although the attic floor radiant panel test has not been adopted as a standard fire performance test for insulation, materials by a national standards developing organization, the Commission does not believe that this fact is relevant to the determination, required by the statute, whether the amendment, including this test, is not necessary to protect the consumer or whether the amendment would create an undue burden on persons subject to the interim standard. The attic floor radiant panel test apparatus and method is described by ASTM E-648. The major difference is that the amendment includes a sample tray to hold loose fill insulation. The Commission believes that NBS has provided an adequate technical rationale for using a 0.12 W/cm^2 critical radiant flux acceptance criteria. This rationale has been made available for interested persons to study and submit comments to the Commission. The justification for the attic floor radiant panel test is not based on adoption of the test by the National Fire Protection Association (NFPA), but is instead based on analysis and experience with the test method by government and industry.

One commentor requested that the Commission include specific details in the attic floor radiant panel test concerning the positioning of the pilot burner and placement of the test specimens. According to the commentor, this aspect of the test is critical, since irregular placement of the test specimens causes differences in flame contact and significant variations in test results. According to the commentor, test results can be controlled or drastically altered by misalignment and misapplication of the burner.

Tests conducted by NBS have not shown that there are significant variations in test results due to the positioning of the burner and the placement of the test specimen. According to NBS, the test problems encountered by the commentor may have been caused by surface irregularities in the specimens prepared by the commentor. The amendment, at § 1209.6(d)(2), provides that specimens for the test should be prepared "taking care not to compact the insulation or leave large voids in the surface of the material". If these procedures are followed, surface irregularities in the specimens should be avoided.

One commentor questioned whether the small sample used in the radiant panel test would validly represent the real life situation in which the insulation materials were installed over a much larger area. The commentor also questioned whether the test method with such a small sample could validly evaluate materials where chemical distribution and displacement variations exist. According to the commentor, the Steiner tunnel test sample is so large that it "normalizes" the effects that would be caused by small samples.

Based on studies and information provided by NBS, the Commission believes that the sample size used in the attic floor radiant panel test is adequate to evaluate the flame resistance of insulation materials covering attic floors. A sample having a critical radiant flux of 0.12 W/cm2 when tested in the attic floor radiant panel spreads flame over 0.24m2 of surface. A sample having a flame spread classification of 25 when tested in the Steiner tunnel spreads flame only over 0.42m2 of surface. Actual attic floor areas are two orders of magnitude greater than the area involved in either test, so that the Steiner tunnel test sample is not appreciably greater than the attic floor radiant panel test sample, relative to the size of attic floor areas. As discussed earlier, information available to the Commission indicates that the attic floor radiant panel test is an accurate simulation of the fire performance of cellulose insulation installed in attics. The repeatability of test results is influenced by the uniformity of test specimens. The attic floor radiant panel test has been shown to be both more repeatable and more reproducible in round robin testing than the Steiner tunnel test (Lawson, NBSIR 79-1588). Minor variations in specimen chemical distribution may have been the cause of the erratic Steiner tunnel measurements when evaluating loose-fill insulation materials. Based on the data collected in round robin testing, the Commission believes that there is no substantiation for the statement that the size of the Steiner tunnel test sample "normalizes" the effects that would be caused by small samples.

One commentor stated that cellulose insultion intended for pneumatic application should be tested at settled density rather than blown density, as specified at § 1209.6(d)(1) of the amendment. According to the commentor, the blown density test method will produce variations in the density of the material in the tray and is not representative of conditions in an actual building.

Information available to the Commission indicates that critical radiant flux increases with increasing specimen density. Since evaluating materials at their blown density is the worst case condition for this test, the Commission believes that the blown density method should be used instead of the settled density test method recommended by the commentor. The commentor has not provided any information, and the Commission has no information showing that the blown density method for this test produces wide variations in the density of the material in the tray, or is not representative of conditions in an actual building. Based on its experience with the test method, the Commission believes that blown density is representative of conditions in an actual building at the time of the original installation.

One commentor stated that the radiant panel test should be related to the end-use thickness of the cellulose insulation when installed to obtain a given R-value.

The commentor has not presented any information, and the Commission does not have any experimental data comparing the effects of specimen thickness on critical radiant flux. As a result, it is not possible at this time to relate specimen thickness to critical

radiant flux. The 5 cm specimen thickness used in the attic floor radiant panel test is generally used for fire tests on insulation materials. The attic floor radiant panel test procedure as a whole has been shown to correlate to real life simulations of attic fires. Although the thickness of the specimen used in the test may not be the same as the thickness of cellulose insulation in real life conditions, the Commission believes that changing one particular test parameter may adversely affect the overall correlations of the test to real life simulations of attic fires. The Commission has no information that shows there is a need to change the specimen thickness in the attic floor radiant panel test.

One commentor stated that the Commission should allow the radiation pyrometer to be calibrated by a transfer method using a working model of the complete apparatus.

The Commission has not included a transfer method of calibration for the radiation pyrometer since this method allows calibration at only one condition. The calibration method specified in the amendment provides for a range of calibration points to ensure that the instrument is working properly. The commentor has not supplied any information showing that the transfer method of calibration for the radiation pyrometer should be included in the amendment.

One commentor stated that there was little correlation between proposed alternative figures 5a, 5b, 7a, and 8a for constructing the radiant panel and figures 5, 7, 8, and 11 which are presently included in HH-I-515D. The commentor agreed with the recommendation for the simplified construction of the dummy specimen shown by proposed Figure 7a. The commentor stated that there was no need to change the construction of the Specimen Tray and Dummy Specimen Holder, since the interlaboratory evaluation of the attic floor radiant panel showed good correlation using presently designed equipment. According to the commentor, the suggested changes for the Specimen Tray and Specimen Holder would require costly and extensive changes to existing attic floor radiant panel test equipment and could produce different data between laboratories using present test equipment and laboratories using the modified equipment. The commentor also stated that the suggested changes to the specimen tray and dummy specimen holder will make the attic floor radiant panel test apparatus unsuitable for testing carpet flooring systems, floor covering systems, and mineral fiber insulation.

The Commission agrees with the commentor that there is no need to include figures 5a and 8a as replacement figures in the attic floor radiant panel test and has not included these figures in the amendment. The Commission has not included proposed figure 7a, concerning the dummy specimen and dummy specimen holder, in the final amendment, since the Commission believes that the original figure adequately describes the device. The Commission agrees with the commentor that the suggested changes to the specimen tray (figure 8a) should not be included in the amendment since the changes to the tray would require additional changes to other provisions of the radiant panel test apparatus. These additional changes may make the attic floor radiant panel unsuitable for use in testing other materials. The Commission believes that proposed figure 5b should replace figure 9, since, unlike figure 9, figure 5b demonstrates the need for positioning the specimen tray before starting the test. The Commission has included this figure in the amendment as figure 5.

One commentor stated that the Commission should eliminate the proposed 10.5 cm dimension for the location of the radiant panel from the zero point on the dummy holder (figure 5a). The commentor recommended that the Commission use the original dimensions in proposed figure 5 of 8.9 and 14 cm from the edge of the radiant panel for establishing the zero point and flame impingement point.

The Commission agrees with the commentor and has made appropriate changes in the amendment (see figure 5).

One commentor suggested that the Commission include the alternate drawing in proposed figure 5b, without the 4 cm dimension on the specimen tray. The commentor stated that the alternate drawing clarified the relationship between the zero reference point and the heat source.

The Commission agrees with the commentor and has included the alternate drawing in the final amendment as figure 5, without the 4cm dimension on the specimen tray.

The same commentor recommended that the dimension for the specimen opening in the dummy holder in proposed figure 7a be changed from 100cm (39.4 inches) to 101.6cm (40 inches). According to the commentor, an error in the original version of HH-I-515D equated 100cm with 40 inches. The commentor, an independent testing laboratory, stated that it had fabricated its dummy specimen holders based on the original dimension in HH-I-515D.The Commission has not included proposed figure 7a in the final amendment. Based on its experience with the test apparatus, the Commission does not believe that the dimension for the specimen opening in the dummy holder is a critical dimension and has not included this dimension in specifying the apparatus. The Commission has no information showing that the dimension proposed by the commentor would have any effect on test results, and does not object to the dimension suggested by the commentor.

One commentor stated that the tolerances of ±.05cm (±.02 in.) on non-critical sheet metal dimensions were too restrictive for commerical practices. The commentor recommended that the description of the radiant panel test apparatus specify only critical dimensions, or ones which would affect performance, leaving non-critical dimensions to the discretion of the equipment manufacturer.

The amendment includes drawings of each test apparatus with complete dimensions in an effort to standardize equipment and assist persons in constructing the equipment. However, the Commission has changed the amendment to relax tolerances on non-critical dimensions. The Commission has also included non-critical dimensions in the figures.

One commentor criticized the specification of 12 guage steel for the thickness of the specimen holder shown in proposed figure 7a and specimen tray shown in proposed figure 8a. According to the commentor, the use of 12 guage steel would conflict with the thickness of 0.105 inches described at § 1209.6(a)(3) and § 1209.6(a)(4).

The Commission agrees with the commentor and has corrected the specification from 12 guage steel to 14 gauge steel for the thickness of the specimen holders at § 1209.6(b)(3) and figure 6 and for the specimen tray at § 1209.6(b)(4) of the amendment issued here.

Requirements and test procedures for smoldering combustion. The amendment includes requirements and test procedures for smoldering combustion at §1209.3(c) and 1209.7. In response to the proposal, the Commission received the following comments concerning these requirements and procedures:

One commentor requested that the smoldering combustion test be eliminated, since smoldering is slow and at a relatively low temperature and since smoldering of insulation may be a

safety feature by alerting people in time to evacuate the house.

The Commission does not agree with the commentor that the smoldering combustion test should be eliminated from the amended interim standard. Although the rate of propagation of smoldering combustion of cellulose insulation is slow, the combustion is persistent. Smoldering that is started in an attic will propagate, and will consume other cellulose materials, such as wood building structural members buried by the insulation. The Commission has knowledge of some instances where there has been rapid transition from smoldering combustion to flaming combustion of cellulose insulation in an attic space. Flaming combustion of cellulose insulation in an attic space can lead to total involvement of the structure. Based on available information the Commission does not believe that smoldering combustion is a safety feature that should not be addressed in the amendment.

One commentor recommended that the Commission eliminate the provision at §1209.7(b)(1) of the smoldering combustion test procudure that allows sample preparation by combing or otherwise mixing. According to the commentor, preparation by blowing is the only means that should be permitted. The commentor also stated that the cellulose insulation should not be hand loaded into the container, since hand loading will result in wide variations in densities throughout the container. The commentor stated that the insulation should be blown into the container and settled by dropping and then refilled by blowing until the proper weight of material fills the container.

The Commission agrees with the commentor that the preparation of a test specimen with uniform density is important in the smoldering combustion test because of the sensitivity of test results to density variations. At this time the Commission is not able to adopt the method suggested by the commentor since the commentor did not provide, and the Commission does not have, comparative data between the method suggested by the commentor and the proposed method. At this time the Commission believes that the method in the amendment will provide the most reproducible results.

One commentor stated that the Commission should revise the technique specified for placing insulation into the sample holder. The commentor recommended that a removable extension be added to the sample holder to increase the height of the sample holder and avoid creating layers of insulation with different densities.

The preparation of a test specimen with uniform density in the smoldering combustion test is important because of the sensitivity of test results to density variations. The Commission agrees with the commentor and has revised the techniques for placing insulation into the sample holder at § 1209.7(b)(1).

One commentor suggested that the smoldering combustion test be conducted under ASTM standard laboratory conditions (ambient laboratory conditions). According to the commentor, it is not necessary to conduct the test at the same temperature and relative humidity as used in conditioning the specimens.

Smoldering combustion tests conducted by NBS have shown that test results are sensitive to the moisture content in the atmosphere. Significant variations in test results have been produced by increasing the specific humidity of the atmosphere by 0.0055 (Kg Water Vapor/Kg Dry Air). Based on these demonstrated effects of humidity conditions, the Commission believes that the humidity conditions and limits at § 1209.7(a)(4) should be included in the amendment.

One commentor questioned whether altitude affects test results obtained using the smoldering combustion test.

At the present time there is no existing data that can be used to estimate variations in smoldering combustion test results that may be caused by changes in altitude. The commentor did not present any information, and the Commission does not have any information, showing that altitude affects smoldering combustion test results.

Other comments. Several commentors stated that the Commission should require mineral wool insulation to meet the same flammability and corrosiveness standards as cellulose insulation.

Based on presently available information, the Commission does not believe that the flammability and corrosiveness requirements of the amendment should be extended to mineral wool insulation. On March 5, 1979, the Commission denied part of a petition that requested the Commission to establish a mandatory standard to address the risk of injury from fires associated with fibrous glass (mineral wool) insulation (44 FR 12080). The Commission denied this part of the petition since available information is insufficient to determine that an unreasonable risk of injury from fires is associated with fibrous glass insulation. The Commission is aware of very few fire incidents associated with fibrous glass insulation and is not aware of any incidents of corrosion associated with fibrous glass insulation. In addition, no injuries have been reported in the incidents available to the Commission. At the present time, mineral wool insulation manufacturers are voluntarily labeling their products with information concerning proper installation, including the need to provide clearance around heat sources and the flammability of vapor barriers.

One commentor stated that standards for cellulose insulation should be based on actual conditions rather than laboratory tests.

The Commission does not believe that it would be feasible to develop a standard requiring tests under actual conditions, because of the amount of time and expense needed to conduct such tests. The test methods of the amendment are intended to simulate the effects of conditions that can occur when the insulation is installed. Based on studies conducted by NBS and the Commission's experience with test methods for cellulose insulation, the Commission believes that the test methods of the amendment provide the most accurate available simulation of actual conditions.

One commentor stated that a much simpler flammability standard could be set by specifying required levels of boric acid.

The Commission does not believe that simply specifying the required level of boric acid would be sufficient to protect consumers from the unreasonable risk of injury from fires asssociated with cellulose insulation. Information available to the Commission indicates that the particle size and uniformity of mixing of flame retardants affects the fire performance of cellulose insulation. Simply specifying a required level of boric acid would not be sufficient to address variables such as particle size and uniformity of mixing that are taken into consideration in the flammability performance requirements of the amendment.

One commentor stated that the flammability tests of the proposed amendment do not protect the consumer against hazards presented by recessed electrical lights and other heat sources, since attic fires occur at much lower temperatures than used in the flammability tests of the amendment.

The Commission believes that the smoldering combustion test in the amendment will ensure that cellulose insulation has some resistance to smoldering ignition from heat sources.

The Commission is aware that the flame resistance tests in the amendment may not fully address problems associated with the improper installation of cellulose insulation. At the present time the Commission is unaware of any flame resistance test which has been shown to be adequate or has gained widespread recognition or approval for simulating exposure to recessed electrical light fixtures. Elsewhere in this issue of the Federal Register, the Commission has published a labeling rule that is intended to address problems associated with the improper installation of cellulose insulation, including improper installation around or above recessed electrical light fixtures.

One commentor claimed that there should be some control over qualification of outside laboratories. According to the commentor, some of the laboratories have been providing questionable results.

Another federal agency, the Department of Commerce (DOC), has developed criteria for accrediting test laboratories that test thermal insulation materials. The DOC program, "The National Voluntary Laboratory Accreditation Program", has as its goal the implementation of a national voluntary system to examine, on request, the professional and technical competence of private and public testing laboratories.

One commentor recommended that the Commission require manufacturers to label insulation with installation instructions to warn installers not to install insulation around recess lighting fixtures and heat producing devices, and instructions concerning installation around attic soffit or eave grills so as not to prevent adequate ventilation.

Elsewhere in this issue of the Federal Register the Commission has published a final rule requiring manufacturers to label containers of cellulose insulation with information conerning the proper installation of insulation away from recessed lighting fixtures and exhaust flues of heat producing devices or apparatus such as furnaces, water heaters, and space heaters. The labeling requirement does not address the proper installation of insulation to provide adequate ventilation since the Commission does not believe that this information is related to safety.

One commentor stated that spray-on cellulose insulation should also be included in the definition of cellulose insulation if the definition includes "wet process" insulation. Another commentor stated that if spray on cellulose insulation is not included in the amendment, the Commission should initiate an independent proceeding to establish appropriate standards for this cellulose insulation material.

As explained earlier in section B of this preamble, the Commission intends spray-on cellulose insulation to be covered by the amendment. Spray-on cellulose insulation is included within the scope of the definition of cellulose insulation at § 1209.2(a). "Wet Process" insulation is also covered by the amendment.

One commentor suggested that the Commission delete the effective date of the amendment from the labeling requirement at section 1209.9(a).

The Commission agrees with the commentor that the effective date should be deleted from the label. At the present time the amendment based on GSA Specification HH-I-515D is the only amendment to the interim standard that has been issued by the Commission. If the Commission issues another amendment in the future, and believes that it is necessary to provide labeling that would allow consumers to identify insulation meeting the requirements of a later amendment, the Commission may require a different label in the future.

One commentor stated that tests for starch content should be included in the proposed amendment to prevent the insulation from attracting rodents.

The amendment does not include the starch content provision of HH-I-515D, since this provision is not part of the flame resistance or corrosiveness provisions of HH-I-515D. As provided in the act, the amendment includes only those parts of HH-I-515D that are revisions to the flame resistance and corrosiveness provisions of HH-I-515C.

Several commentors stated that the proposed amendment should include a flame resistance permanency test to ensure that the insulation retains its fire resistant properties with time. According to one commentor, the test must be a reliable predictor of flame resistance permanency.

At the present time, the Commission is not aware of any test which effectively assesses flame resistance permanency. An NBS analysis of the flame resistance permanency test in the present interim standard indicates that this test is not an appropriate measure of flame resistance permanency, since the test method in HH-I-515C (the GSA Specification on which the interim standard is based) has not been shown to correlate with real life conditions. HH-I-515D does not include a test method for assessing flame resistance permanency. The Commission staff is considering the need to develop a test to assess flame resistance permanency.

One commentor recommended that the interim standard be given a title or identifying number so that it could be referenced in building codes and ordinances.

The interim standard does have a title and identifying number. The interim standard may be referred to as the "Interim Safety Standard for Cellulose Insulation" or as "16 CFR Part 1209, Subpart A."

One commentor recommended that the amendment be given a title that does not include the word "cellulose" until other types of insulation are covered by standards.

The Commission believes that the title of the interim standard should include the word cellulose in order to eliminate potential confusion about the applicability of the interim standard.

One commentor asked why the standard is referred to as an interim standard, and requested that the standard be called a "permanent" standard.

The standard is referred to as an interim standard since the legislation under which the standard is issued refers to the standard, based on revisions to GSA Specification HH-I-515C, as an interim standard. The legislation provides that interim standards are enforced in the same manner as any other standard. A violation of the interim standard is considered the same as a violation of any other standard issued by the Commission. The legislation provides that the Commission may issue a final consumer product safety standard if the Commission determines that the interim standard does not adequately protect the public from the unreasonable risk of injury associated with flammable or corrosive cellulose insulation. At the present time the Commission has no plans to issue a final standard.

Several commentors stated that the comment period for the proposed amendment did not provide sufficient time to provide detailed comments.

The 30 day comment period for the proposed amendment was specified by section 35(c)(2)(E) under Pub. L. 95-319. Although the Commission did not have the option of extending this comment period, the Commission attempted to provide additional time for the public to present its views by publishing and soliciting comments on an advance notice of intent concerning the proposed amendment and proposed certification rule (43 FR 39720, September 6, 1978). The Commission also mailed the proposed amendment to over 1,200

individuals and organizations that the Commission believed had an interest in the proceeding. Included in the persons receiving this mailing were all known cellulose insulation manufacturers, insulation trade associations, building code organizations, and other interested persons. In response to the proposed amendment and proposed certification rules the Commission received numerous detailed comments within the comment period.

One commentor suggested that "importers" be added to the phrase "manufacturers and private labelers" at § 1209.9.

The Commission does not believe that it is necessary to add the term "importers" to the phrase "manufacturers and private labelers" at § 1209.9, since the definition of manufacturer, at section 3(a)(6) of the act, includes persons who import a consumer product. However, the Commission has added the term "importer", as the commentor suggested, to this section to ensure that this provision is clear.

One commentor stated that if the Commission adopts the proposed amendment, state and local government officials would not be able to enforce state and local codes requiring insulation materials to conform to flammability resistance criteria based on the Steiner tunnel test.

Section 26 of the CPSA (15 U.S.C. 2075) provides that the state and local governments may not establish or continue in effect any standards or regulations designed to deal with the same risk of injury as the federal standard, unless the state or local government requirements are identical to the federal standard. As a result of this provision, after the amendment becomes effective state and local governments would not be able to enforce flammability standards for cellulose insulation based on the Steiner tunnel test. However, state and local governments could amend their requirements to make them identical to the amendment, and then enforce the amended requirements; or, as provided by section 26, state and local governments could apply to the Commission for an exemption from preemption. If granted, the exemption could allow state and local governments to enforce a different flammability standard for cellulose insulation.

Economic considerations. Several commentors stated that the proposed amendment was unnecessary. One commentor claimed that the proposed amendment does not contribute to safety but only adds to manufacturing costs and costs to consumers. Another commentor stated that the proposed amendment was unnecessary since the present interim standard provides adequate protection to consumers. According to the commentor, the proposed amendment represents an unnecessary cost to manufacturers and consumers. Another commentor stated that the proposed amendment was unnecessary since the amendment would be costly to the industry and the consumer and would not bring about effective regulation. Several commentors supported the proposed amendment as necessary and appropriate to protect the public safety. One commentor supported the proposed amendment and stated that the Commission's standards would benefit the cellulose insulation industry.

The Commission agrees with the commentors who stated that the amendment is necessary. The Commission believes that the flame resistance requirements of the amendment are a substantial improvement over the flame resistance requriements of the present interim standard. Unlike the present interim standard, the amendment includes smoldering combustion test procedures and requirements to address the smoldering combustion problem associated with cellulose insulation. In addition, the attic floor radiant panel test procedures and requirements more accurately simulate the hazard scenario involving cellulose insulation than does the Steiner tunnel test of the present interim standard. Unlike the Steiner tunnel test, the attic floor radiant panel test addresses the hazard scenario where insulation installed on the floor of an attic in still air and exposed to radiation from the roof is subjected to a small ignition source. Based on presently available information, the Commission believes that the corrosiveness requirements and test procedures in the amendment are a significant improvement over the requirements and test procedures of the present interim standard. The commission believes that the test procedures in the amendment are more reproducible than the procedures in the present interim standard, since the amendment has eliminated much of the subjectivity and other sources of potential variability in the present interim standard.

Based on presently available information, the Commission believes that the amendment would not have a major economic impact on the availability or price of cellulose insulation. Although some cellulose insulation manufacturers may go out of business if they are unable to meet the requirements of the amendment for cellulose insulation, the uncertain future demand situation may be the most important factor for manufacturers in deciding whether to remain in business. Approximately fifty manufacturers have indicated to the commission that they are presently able to meet the provisions of HH-I-515D, on which the amendment is based. The amendment is expected to increase chemical costs in general for cellulose insulation manufacturers by 1 or 2 percent depending on the type and quantity of fire retardant chemicals being used at the present time. Because the chemical loading that would be necessary to meet the requirements of the amendment is similar to the chemical loading necessary to meet the present interim standard, the chemical loading should not affect the thermal properties of the insulation. As a result, an additional amount of insulation should not be necessary to achieve the appropriate thermal resistance for any given application.

The Commission believes that the labeling requirement of the amendment will have a minimal economic impact, since this provision would not require manufacturers and private labelers to alter the product and since manufacturers and private labelers are currently required to label their product under the interim standard. The Commission believes that the effective date of October 16, 1979 will allow most manufacturers and private labelers to draw down inventories of bags with non-complying labels and thereby limit the need for hand-stick-on labels. At worst, if inventories are not depleted and hand-stick-on labels are used, the Commission estimates that these labels would add approximately 2½ cents to the cost of each bag of insulation, as well as an application cost of at most 4 cents per bag during the limited production period necessary to deplete inventories of empty bags.

Testing and certification costs resulting from the Commission's certification requirements (published elsewhere in this issue of the Federal Register) will vary depending on the size and technical competence of the manufacturer or private labeler. In most cases, the testing costs associated with finding an acceptable chemical formulation will be relatively small since (1) most large manufacturers and private labelers will have the internal capability of performing these tests and, (2) most of the remaining manufacturers and private labelers will probably purchase the appropriate chemical

formulation as a premix, thus experiencing no direct development and testing costs. The potential economic impact of the certification rule is discussed in greater detail in the preamble of the certification rule.

The Commission believes that the amendment will have little impact on retail prices. Based on the Commission's economic analysis, the Commission believes that cellulose insulation prices would probably increase by about 1 percent at the retail level. This means that consumers would pay $1 to $2 more to insulate a 1,200 square foot attic to a value of R-19.

One commentor stated that the requirements of the amended interim standard would not be difficult to meet for a manufacturer who is able to meet the requirements of the present interim standard.

Based on presently available information, the Commission agrees in general with the commentor. However, small manufacturers who are able to meet the requirements of the present interim standard may lack skill and technical knowledge to meet the requirements of the amendment.

One commentor stated that the proposed amendment would have an adverse economic effect as a result of the cost of additional testing to ensure compliance with the amendment.

The Commission does not believe that testing to ensure compliance with the amendment would have an adverse economic effect on the cellulose insulation industry beyond the initial qualification testing costs. The qualification testing requirements in the certification rule are very flexible. Qualification testing costs are likely to be greatest for firms which need, for marketing purposes, a certification label from a commercial laboratory. Generally, the label can be obtained only if a manufacturer participates in a commercial laboratory's complete certification program, which includes at least one on-site inspection and testing in addition to that in the amendment. The cost for this kind of program leading to a certification label is approximately $2,500 to $3,000. Approximate fees for the tests in the amendment total under $1,000. Based on presently available information, the Commission believes that the costs of testing to ensure on-going compliance with the amendment will not be higher than the costs of testing under the present interim standard, and, in fact, may be lower than the costs of testing under the present interim standard.

Two commentors stated that the proposed amendment would adversely affect borderline and small insulation companies, forcing some out of business as a result of the new requirements and the high cost of product liability insurance.

The Commission has no information to indicate that the amendment would increase the costs of product liability insurance and would force small insulation companies out of business. The expenditure required to meet the requirements of the amendment will vary among firms depending on present chemical formulations, equipment and technical knowledge. At the present time, manufacturers are assessing whether their future financial situations will be strong enough to justify any additional expenditures to meet the requirements of the amendment. This assessment will be based in part on estimates of future demand. The Commission estimates that demand will remain near the present low level for the next several years. The Commission estimates that up to 100 manufacturers will decide not to make the investment necessary in order to continue production. (This estimate is based on very limited data.)

One commentor stated that substituting the attic floor radiant panel test for the Steiner tunnel test would render useless a large body of Steiner tunnel test data developed over the years. According to the commentor, discarding existing tunnel data would have an economic impact on the cellulose insulation industry.

The commentor has not presented any information, and, the Commission does not have any information showing either that the adoption of the attic floor radiant panel test would force manufacturers to discard Steiner tunnel test data developed over the years, or that discarding such data would have an economic impact on the cellulose insulation industry.

One commentor recommended that the effective date of the amendment be delayed until December 31, 1979 to allow manufacturers additional time to test their products and resubmit modified formulations at least two or three times. According to the commentor, the opportunity to resubmit modified formulations would allow manufacturers to establish formulations that are as economical as possible. The commentor stated that commercial testing laboratories may not have sufficient capacity to test manufacturers' products by the proposed effective date of October 16, 1979. The commentor also stated that there is no evidence that delaying the effective date of the proposed amendment would present an unreasonable risk of injury to consumers. Another commentor stated that there should be an effective date that is at least 180 days after publication of the final amendment in order to provide sufficient time for product development, compliance testing, and labeling.

The Commission believes that the amendment should become effective on October 16, 1979, as proposed. The commentors have not presented information that shows that a later effective date is necessary. The October 16, 1979 effective date will allow manufacturers, who have not already done so, at least one opportunity to develop and test their product to determine that their product can meet the requirements of the amendment. Information available to the Commission indicates that most manufacturers have initiated testing programs months ago in order to develop products capable of meeting the tests in the amended standard. The Commission has no information that testing laboratories do not have sufficient capacity to test manufacturers' products by the October 16, 1979 effective date. Instead, in the last few months the capacity of testing laboratories to test specimens under the requirements of the amendment has increased significantly. The Commission believes that the October 16, 1979 effective date will allow most manufacturers time to draw down inventories of bags that are labeled under the present interim standard and thereby limit the need for hand-stick-on labels. If the effective date of the amendment is extended, as requested, the amendment would not cover the primary purchasing season for insulation, which begins in September and is usually greatest in late November.

One commentor stated that it is certain that manufacturers will have to use temporary labels to comply with the labeling requirement at § 1209.9. Another commentor stated that the label requirements would be expensive to meet as a result of the large number of non-complying bags in inventory.

Although a few manufacturers may have significant inventories of bags without the appropriate label at the time of the effective date, in general, most manufacturers interviewed by the Commission do not forsee major problems in meeting the labeling requirements. In the event that hand stick-on labels are needed for containers of insulation without the proper label in inventory, the Commission estimates that these hand stick-on labels would

add approximately 2½ cents to the cost of each bag of insulation, as well as an application cost of approximately 4 cents per bag of insulation over the limited period of time needed to deplete inventories.

One commentor asked whether a pressure sensitive or glued on label would be considered to be a permanent and conspicuous label meeting the label requirement of section 1209.9.

As provided in Section 1209.9(a) a pressure sensitive or glued on label can be considered to be a permanent label provided the label remains attached to the insulation container for the expected time interval between the manufacture of the product and its installation. In addition, the label must meet the requirements of § 1209.9(b) for prominence and conspicuousness. The Commission believes that pressure sensitive labels can meet these requirements.

V. Statutory Findings

Section 35(a)(2)(F) of the act, as amended, provides that the Commission must issue the amendment to the interim consumer product safety standard unless the Commission determines, after consultation with the Secretary of Energy, that (1) the amendment is not necessary for the protection of the consumer from the unreasonable risk of injury associated with flammable or corrosive cellulose insulation; or (2) implementation of the amendment will create an undue burden on persons who are subject to the interim consumer product safety standard. The *Conference Report* to Pub. L. 95–319 emphasizes that the Commission has an affirmative obligation to adopt the amendment to the interim standard. The Commission should not adopt the amendment only if the Commission makes a determination that the amendment is unnecessary or unduly burdensome. (H. R. Rept. No. 95–1322, 95th Cong., 2d sess. 8 (1978)).

A. Determination Whether the Amendment Is Not Necessary to Protect the Consumer

Congress required the Commission to issue the present interim standard after finding that an interim standard is reasonably necessary to eliminate or reduce an unreasonable risk of injury to consumers from flammable or corrosive cellulose insulation (Sec. 2(a)(4), 15 U.S.C. 2051 note, Pub. L. 95–319). In the House Committee report concerning this legislation, the members of the House Committee on Interstate and Foreign Commerce based the need for the legislation, in part, on the fact that no Federal mandatory safety standard existed to ensure the safety of cellulose insulation purchased by consumers. The House Committee members stated that the absence of a standard exposed the consumer to risks from fire and corrosion damage from untreated or improperly treated cellulose home insulation. According to the House Report, unless a safety standard is enacted, fires caused by flammable cellulose insulation are likely to increase and the potential for serious injury to the occupants of these homes is substantial. (H.R. Rept. No. 95–1116, 95th Cong., 2d Sess. 2 (1978)).

As Congress instructed, the Commission issued the present interim standard based on HH–I–515C. The interim standard applies to all cellulose insulation manufactured after September 7, 1978. Since Congress has already concluded, in requiring the present interim standard, that a standard is needed to protect the public from the unreasonable risk of injury from fires and corrosion associated with cellulose insulation, the Commission does not believe that it is appropriate to reevaluate the need for a standard in considering whether the amendment is necessary. Instead, the Commission has based its decision as to the need for the amendment on an evaluation of the adequacy of the present interim standard and the need for the amendment in terms of serving the Congressional purpose of protecting the public. The Commission discusses below the information it has that compares the amendment and the present interim standard in terms of protection of the public.

At the present time the Commission has the following information supporting the determination that the amendment is necessary to protect the public.

Flame resistance requirements and test procedures of the proposed amendment. (1209.3(b), 1209.6, 1209.3(c), 1209.7)

The Center for Fire Research of the National Bureau of Standards (NBS) has prepared for the Commission a technical rationale for the flame resistance provisions of HH–I–515D *(Technical Rationale for the General Services Administration Federal Specification HH–I–515D Flame Resistance Provisions,* Center for Fire Research, National Bureau of Standards, December 1, 1978). The technical rationale includes references to other studies and documents. A copy of this technical rationale and supporting documents is available in the Office of the Secretary of the Commission. The Commission has analyzed and reviewed this technical rationale and accompanying documents, and, based on presently available information, agrees with the conclusions in the NBS technical rationale.

Requirements and test procedures for smoldering combustion. According to the NBS technical rationale, a review of fire incident data showed that smoldering was the most likely hazard associated with cellulose insulation. The NBS technical rationale stated that more than 80 percent of the fires associated with insulation involved cellulose insulation and were started by overheated electrical light fixtures, and other electrical sources, and heated flues. NBS studies indicated that when exposed to a heat source, either in an attic or a side wall, cellulose insulation could be induced to smolder unless properly treated. According to NBS, heat sources such as recessed lighting fixtures and glowing wire connections in side walls could result in temperatures in excess of 260°C (500°F) when insulation contacted the heat sources. Temperatures as high as this are sufficient to induce smoldering.

The smoldering combustion test procedures and requirements have been included in the revised GSA Specification HH–I–515D and in the amendment to the interim standard; since the flame resistance test of the present interim standard, based on GSA Specification HH–I–515C, does not address the smoldering combustion problem. The smoldering combustion test in the amendment uses a lighted cigarette as the ignition source. If smoldering is likely to occur with the test material, the lighted cigarette has a sufficiently high temperature (approximately 700°C in the very small glowing region) to initiate smoldering. The test method is intented to determine whether the smoldering will continue in the insulation if smoldering has started. In order to pass the test, the test specimen must have a weight loss of less than or equal to 15 percent of the initial weight of the specimen and must not exhibit flaming combustion. The weight loss requirement is based on data showing that, if a product does not exhibit smoldering tendency, the weight loss of the specimen would be 1 to 4 percent, while if the product smolders the weight loss would be from 30 to 35 percent or higher. According to NBS, because of the nature of the test results, a weight loss criterion midway between these values is reasonable. The flaming combustion criterion was also chosen as an appropriate criterion to eliminate the most severe failure situation. The Commission agrees with the NBS

conclusion that the smoldering combustion test requirement will ensure that insulation materials have some resistance to smoldering. This would represent an improvement over the present interim standard, which does not contain any test requirement that is designed to ensure that insulation materials have some resistance to smoldering.

Requirements and test procedures for critical radiant flux. The present interim standard, based on GSA Specification HH-I-515C, uses the Steiner tunnel test method (ASTM E-84) to assess flame resistance. This test method applies a fixed orientation and exposure for all materials tested, regardless of the end-use configuration of the product. In the technical rationale prepared for the Commission, NBS examined the Steiner tunnel test method of HH-I-515C and concluded that this test method is inappropriate for testing cellulose insulation installed on the floor of an attic. According to NBS, cellulose insulation is not normally applied over a metal screen and is not likely to be exposed to flames from below, as is done in the Steiner tunnel test. In addition, NBS stated that in a typical fire, the cellulose insulation is not subjected to a 5,000/Btu/min fire and/or a wind velocity of 240 ft/min, as is done in the Steiner tunnel test. According to NBS the Steiner tunnel test has been shown to be invalid for low density fire retardant treated plastic foams, so that the applicability and appropriateness of this test method for other low density materials is also questionable. According to NBS, cellulose insulation that has not been treated with fire retardant chemcials has been reported to have flame spread classifications from 50 to 120 when tested in the Steiner tunnel. However, in actual fire situations these materials burn more rapidly than plywood having supposedly less flame resistant flame spread classifications, ranging from 150 to 200. The Commission agrees with these conclusions by NBS.

Unlike the Steiner tunnel test, the requirements and test procedures for critical radiant flux in the amendment are intended to address the hazard scenario where insulation that is installed on the floor of the attic in still air and exposed to radiation from the roof is subjected to a small ignition source. According to NBS, cellulose insulation in this end-use configuration could become involved in such a hazard scenario. In this common end-use configuration, cellulose insulation is applied between and over floor joists in an attic, where the air is relatively still and the most severe exposure is likely to develop during periods of elevated outdoor temperatures plus solar radiation. A small ignition source, such as a dropped match or a carelessly applied propane torch, would be typical ignition sources.

The test method in the amendment involves a radiant exposure varying from 0.1 to 1.1 W/cm^2, corresponding to the differences between direct solar radiation in the summer and the irradiance on the floor from a moderately severe flaming fire on the ceiling. Although the test method was originally developed for evaluating flooring systems in corridors that are exposed to radiation from fully developed fires in adjoining rooms, the test method was adapted for cellulose insulation. The test method provides that the cellulose insulation is exposed to a graded irradiance and ignited with a pilot burner at the high flux end of the specimen. The flux at the farthest point where the burning extends is the critical radiant flux. The amendment requires cellulose insulation to have a critical radiant flux of greater than or equal to 0.12 W/cm^2.

The Commission agrees with the NBS conclusion that this test requirement represents a minimum level for safety. NBS obtained the test requirement by estimating attic temperatures and adding a safety factor. If insulation meets the test requirement, then a fire should not propagate in the attic insulation. NBS has conducted large scale attic mock-up tests which support the attic floor radiant panel test and the criterion for passing the test. According to NBS, Underwriters Laboratories has conducted tests which lead to the conclusion that cellulose insulation meeting the test requirements resists flame propagation under the highest ambient temperature conditions of the attic simulation fire test.

The NBS technical rationale points out that there is limited data to support a correlation between the critical radiant flux measurement used in the amendment and the flame spread classification measurement obtained in the present interim standard. The flame spread classification of 25 required to pass the present interim standard may be either above or below the critical radiant flux of 0.12 W/cm^2 that would be required to pass the amendment.

Test Method Precision for Flame Resistance. As part of the development of the flammability test methods for HH-I-515D, NBS conducted an interlaboratory program to evaluate the repeatability and reproducibility of the flame resistance test methods for cellulose insulation. The results of this study are in a report titled, "Interlaboratory Evaluation of the Attic Flooring Radiant Panel Test and Smoldering Combustion Test for Cellulose Thermal Insulation", J. Randall Lawson, Center for Fire Research, National Bureau of Standards, January 1979. A copy of this study is available in the Office of the Secretary of the Commission.

The results of the interlaboratory program for the critical radiant flux determination showed that the pooled coefficient of variation for repeatability between test results in the same laboratory was 12 percent and the average coefficient for reproducibility between test results in different laboratories was 21 percent. According to NBS, these values are not significantly greater for cellulose insulation than for other materials. In addition, these values compare favorably with precision estimates available from other standard fire tests.

For the smoldering combustion test, eight of ten laboratories agreed for six of the seven materials tested. Seven of ten laboratories agreed on the seventh material. Although, as a result of the split test results, NBS did not place the data for the smoldering combustion test through a rigorous statistical analysis, agreement among the laboratories was relatively good. According to NBS, some variation in laboratory procedures may have contributed to the split test results.

Based on the information obtained from the interlaboratory study, NBS concluded that there is reasonable assurance that there will be consistent results from different laboratories evaluating the same material for compliance with the smoldering combustion and radiant panel tests. The Commission agrees with this conclusion.

Test procedures and requirements for corrosiveness (§§ 1209.3(a) and 1209.5). The Commission has the following information that supports the determination that the corrosiveness requirements and test procedures of the amendment are necessary to protect the public: In section 2(a)(4) of Pub. L. 95-319, Congress found that a mandatory interim standard is reasonably necessary to eliminate or reduce an unreasonable risk of injury to consumers from corrosive cellulose insulation. During the Congressional hearings concerning Pub. L. 35-319 corrosion failures were identified in some metal buildings and in plumbing in some residential structures. These failures were attributed to cellulose insulation treated with selected flame retardant chemicals. Since cellulose insulation

may come in contact with a variety of metals in residential construction such as electrical outlet boxes, conduits, copper and ferrous plumbing lines, structural members, and gas lines, the potential for corrosion failures may exist. The Commission believes that Congress concluded there is an unreasonable risk of injury from corrosiveness associated with cellulose insulation based on these factors. In the *House Report*, the House Committee stated that many fire retardant chemicals added to cellulose insulation may be corrosive and could present a risk of serious structural damage to a home [H.R. Rept. No. 95-1116, 95th Cong. 2d Sess. 3 (1978)].

The evaluation of the corrosiveness of cellulose insulation has in the past been assessed by use of the test method in HH-I-515C, which is the test method in the present interim standard. On June 15, 1978 GSA adopted HH-I-515D, which includes revisions to the test method for corrosiveness in HH-I-515C.

The test procedure for HH-I-515C and HH-I-515D consists of placing coupons of aluminum, steel, and copper in cellulose insulation saturated with water. The metal coupon-cellulose insulation composites are placed in a forced-air humidity chamber at high humidity. After a given period of time corrosiveness is evaluated by the presence of perforations in the coupons.

The major revisions to HH-I-515C included in HH-I-515D are the elimination of the seven day subjective evaluation which established the need for extended 30 day testing in HH-I-515C, and the substitution of a single 14 day exposure as specified in HH-I-515D.

The corrosiveness test procedures in HH-I-515D, also differ from the test procedures in the present interim standard in the procedure for preparing the metal coupons and insulation specimens, the type of coupons used in the test, and the coupon post-cleaning. NBS has prepared a critique of the corrosiveness test methods for the present interim standard and the amendment based on HH-I-515D. A copy of the this critique is available in the Office of the Secretary of the Commission. Based on the NBS critique, the Commission has included several changes to the corrosiveness test procedures of HH-I-515D in the amendment. These changes are explained in greater detail in the section of this notice titled: *III. Commission Changes to the Flame Resistance and Corrosiveness Provisions of HH-I-515D.* The most significant changes involve improvements for cleaning and handling the test coupons so that the test is conducted on metal coupons that are free of contaminants; preparation of the test specimens to address variability due to possible separation of dry chemicals from the insulation, to improve the homogeneity of the test specimens, and to ensure continuity between composite specimens; and changes to avoid moisture evaporation from the specimens after they have been prepared. NBS has evaluated and concurred in these changes.

Based on presently available information, the Commission believes that the corrosiveness requirements and test procedures in the amendment are suitable for discriminating between corrosive and non-corrosive cellulose insulation and are a significant improvement over the requirements and test procedures of the present interim standard. The Commission believes that the test procedures in the amendment should be more reproducible than the procedures in the present interim standard, since the proposed amendment has eliminated much of the subjectivity and other sources of potential variability in the present interim standard.

B. Determination Whether the Amendment Would Create an Undue Burden

At the present time, the Commission has the following information regarding the degree of burden of the amendment on persons subject to the interim standard.

The Commission staff has prepared an economic analysis of the potential economic impacts of the amendment. This economic analysis is based on research conducted for the Commission. a copy of the Commission's Economic Analysis dated December 6, 1978 and a final copy of the research report dated November 29, 1978 (revised May 11, 1979) is available in the office of the Secretary of the Commission. The economic analysis assesses the incremental impact of the amendment relative to the interim standard that is presently in effect.

In assessing the potential burden of the amendment, the Commission considered the following factors: the possible need for manufacturers to alter chemical formulations from those currently being used to meet the present interim standard, as well as the need to make other changes to the product meeting the present interim standard; increased technical knowledge and skill required for some firms to maintain proper chemical formulation; increased chemical costs; increased retail prices; possible adverse effects on the quality or availability of cellulose insulation; labeling costs; and possible burdens presented by testing and certification costs as well as the effective date.

The present interim standard, based on GSA Specification HH-I-515C, was published on August 8, 1978 and became effective September 8, 1978. At the time the present interim standard became effective, the Commission did not have information showing exactly how many cellulose insulation manufacturers were making insulation that complied with HH-I-515C or information showing how many manufacturers would be able to make insulation that met the requirements of the present interim standard. Estimates by industry representatives of the number of manufacturers who would be able to comply with the present interim standard varied greatly, from virtually no manufacturer to virtually every manufacturer.

The Commission has been enforcing the present interim standard since September 8, 1978. From its experience in enforcing the present interim standard during this period of time, the Commission has found that fifty percent of the cellulose insulation firms in business were making insulation that complied with the present interim standard without requiring further modifications. Of the firms who were not complying with the present interim standard, the Commission has estimated that most of these firms are capable of meeting the present interim standard with only relatively minor modifications to their product. At the present time, the Commission believes that only a small percent of the non-complying firms in business would experience major problems in meeting the requirements of the present interim standard.

The Commission believes that the ability of manufacturers to comply with the present interim standard is important in assessing the potential burden of the amendment, since available information indicates that the burden of complying with the amendment may not be great for most manufacturers capable of meeting the present interim standard. Available information indicates that the amendment would require only small modifications to cellulose insulation that meets the present interim standard. Manufacturers may find it necessary to alter their present formulation of chemicals added to the insulation, and may require technical knowledge and skill in discovering and maintaining a more precise chemical formulation. however, many firms who are complying

with the present interim standard would not be required to purchase or install new equipment in order to make a product that will comply with the amendment.

Because manufacturers may need to modify the chemical formulation of the product, many manufacturers are uncertain that their product will meet the amendment until testing is completed. At the present time many firms have begun testing their product to determine what changes will be needed to meet the amendment. Until testing is completed, these firms will not have an exact estimate of the burden of the amendment. Some firms, mainly small firms, have indicated to the Commission that they are now less certain of their ability to meet the amendment than they were last fall. However, approximately 50 manufacturers now claim to be producing a product that meets the requirements of HH-I-515D, on which the amendment is based.

Based on presently available information, the Commission believes that, in general, the amendment would increase chemical costs by one or two percent, possibly higher for particular manufacturers depending on the type and quantity of fire retardant chemicals being used at the time. The Commission believes that the amendment will have only a nominal impact on retail prices of approximately one percent, so that a consumer would pay $1 to $2 more to insulate a 1200 square foot attic to a value of R-19. This estimate is based, in part, on the experience of manufacturers who claim to be meeting HH-I-515D, and is expected to result primarily because of increases in chemical costs. Manufacturers who experience greater increases in chemical costs are not likely to be in a position to pass the extra cost on to the consumer because of competitive pressures.

Because the chemical loading that would be necessary to meet the requirements of the amendment is similar to that loading required by the amendment should not influence the quality or the thermal properties of the insulation. As a result, an additional amount of insulation should not be necessary to achieve the appropriate thermal resistance for any given application.

The availability to consumers of cellulose insulation is not likely to be affected by the amendment. At the present time, approximately 50 manufacturers, mostly large manufacturers, claim to meet HH-I-515D, on which the amendment is based. The Commission has received estimates that the 40-45 largest manufacturers account for over fifty percent of the cellulose insulation marketed. Based on this factor and the consideration that production capacity utilization of the industry is presently extremely low, the Commission does not believe that the amendment will adversely affect the availability of cellulose insulation.

The Commission estimates that the labeling requirement of the amendment will have a minimal economic impact on all but a few manufacturers, since this provision would not require manufacturers and private labelers to alter the product and since manufacturers and private labelers are currently required to label their product under the present interim standard. The Commission believes that the effective date of October 16, 1979 will allow most manufacturers and private labelers time to draw down inventories of bags with non-complying labels and thereby limit the need for hand-stick on labels. At worst, if inventories are not depleted and hand-stick on labels are used, the Commission estimates that these labels would add approximately 2½ cents to the cost of each bag of insulation, as well as an application cost of at most 4 cents per bag during the limited production period needed to deplete inventories.

Testing and certification costs resulting from the Commission's certification requirements (issued elsewhere in this issue of the Federal Register) will vary depending on the size and technical competence of the manufacturer or private labeler. In general, costs resulting from the certification rule will not be burdensome since the rule leaves manufacturers with a great deal of flexibility concerning testing and recordkeeping. The costs of meeting the qualification and production testing requirements will vary among firms, depending on the cost of equipment for tests selected, the frequency of testing, and the need for skilled personnel to conduct the test selected. If a manufacturer were to qualify his product by using the specific tests in the standard, the costs would be under $1000. A firm who chooses to obtain a certification label from a commercial laboratory will have higher testing costs, since the costs for a testing program leading to a certification label from a commercial testing laboratory is approximately $3,000. The recordkeeping costs associated with the certification rule will not be significant since most manufacturers should be able to incorporate the required recordkeeping into their present systems with little difficulty. (The potential economic impact of the certification rule is also discussed in the preamble of the certification rule.)

The Commission believes that the October 16, 1979 effective date is reasonable and will not be burdensome to most manufacturers. Some manufacturers who have waited until publication of the amendment to begin testing and reformulation of their products may have only one opportunity to test their products before the effective date if these manufacturers use an outside testing organization to conduct their tests. However, information available to the Commission indicates that many manufacturers have begun testing and reformulation months before publication of the amendment. If the Commission were to delay the effective date by several months, this delay could have an adverse effect on many manufacturers who are currently meeting the present interim standard and GSA Specification HH-I-515D. These manufacturers would then be faced with the burden of testing and qualifying their product to the Commission's present interim standard and HH-I-515D for a longer period of time. (The General Services Administration (GSA) and the Department of Housing and Urban Development (HUD) presently require cellulose insulation manufacturers to meet the provisions of HH-I-515D when making insulation for purchase by the federal government or for use in federal housing programs.) Extending the effective date beyond October 16, 1979 would also mean that the amendment would not be in effect for the peak purchasing season for cellulose insulation. Many manufacturers have expressed their desire that the amendment become effective as soon as possible to assist in marketing their product.

At the present time, the Commission does not believe it is possible to provide an accurate estimate of the number of firms that are likely to go out of business solely because of the amendment. The difficulty in providing a certain estimate arises because many firms themselves have not completed testing and do not presently know the true costs to their firms of meeting the amendment. In addition, the decision whether to remain in business may be more dependent on the future demand situation for cellulose insulation than on the requirements of the amendment. If the demand for cellulose insulation does not increase significantly this fall, many manufacturers are likely to leave the industry regardless of whether they can comply with the amendment. The future demand situation for cellulose insulation

is uncertain at the present time. Available information shows that between 1977 and 1978, the production of cellulose insulation decreased 66 percent. Demand for cellulose insulation has declined significantly since 1977 levels. Information shows that the demand for cellulose insulation should remain between 400 million and 550 million pounds per year during most of the next decade; however, these figures could vary. Based on the most current information concerning compliance with the present interim standard and the expectations of manufacturers of their ability to meet the requirements of the amendment, the Commission estimates that approximately 100 small companies, with a total of 500 workers, may leave the industry after the amendment is issued. These estimates are derived from industry expectations that are based on very limited data.

The Commission has considered the information discussed above showing that the amendment is necessary to protect the consumer and assessing the potential burden on persons subject to the amendment. The Commission has also considered the information presented by the commentors on these issues.

Many commentors supported the issuance of the amendment. The commentors also made numerous recommendations for improving the test procedures and methods of the amendment, as discussed earlier in this notice, and many of these suggestions were adopted by the Commission. None of the commentors who opposed issuing the amendment presented information demonstrating that the amendment is not necessary to protect consumers, or would unduly burden persons subject to it.

In requiring the present interim standard, Congress in Pub. L. 95-319 concluded that a standard is needed to protect the public from the unreasonable risk of injury from fires and corrosion associated with cellulose insulation. The commentors who oppose the issuance of the amendment have not presented information showing that the requirements and test procedures of the present interim standard provide greater protection to the consumer than the requirements and test procedures of the amendment. The commentors who oppose the amendment also have not presented information showing that the provisions of the amendment, including the label and effective date, are unduly burdensome in that they would unduly affect the ability of manufacturers to market the product, or would unduly affect the availability, quality, or price of the product.

The Commission believes that available information shows that the flame resistance provisions of the present interim standard are unlikely to provide as great a degree of protection as the flame resistance provisions of the amendment. The Steiner tunnel test method of the present interim standard, unlike that attic floor radiant panel test method of the amendment, has not been shown to be an appropriate method of testing cellulose insulation installed on attic floors. The attic floor radiant panel test of the amendment addresses the hazard scenario, involving a common end-use configuration, where cellulose insulation that is installed on the floor of an attic in still air and exposed to radiation from the roof is subjected to a small ignition source.

Available information shows that the Steiner tunnel test of the present interim standard has a coefficient of variation for reproducibility that is significantly higher than that for the attic floor radiant panel test, making it less likely that consistent tests will be obtained with the Steiner tunnel test. The available information also shows that smoldering is the most likely hazard associated with cellulose insulation. Unlike the present interim standard, the amendment includes a requirement and test procedure, the smoldering combustion test, to determine whether smoldering will continue in insulation. Available information also does not show that the corrosiveness provisions of the present interim standard will provide a greater degree of protection to consumers than the corrosiveness provisions of the amendment. The corrosiveness test procedures and requirements of the amendment contain improvements in the method for cleaning and handling the test coupons and improvements in the preparation of test specimens to eliminate variables. The corrosiveness test of the amendment is also less subjective than the present test, and is of shorter duration and is easier to conduct and less expensive than the present test. As a result, the Commission believes that the corrosiveness test of the amendment is less burdensome than the corrosiveness test of the present interim standard.

In considering the potential burden of the amendment, the Commission does not believe that the available information shows that this burden would be undue. At this time approximately 50 manufacturers claim to be able to meet the provisions of GSA HH-I-515D, on which the amendment is based. Available information shows that the amendment would increase chemical costs to manufacturers, in general, by only 1 to 2 percent, and would have little impact on retail prices or the availability of insulation. Since the chemical loading necessary to meet the requirements of the amendment is similar to that required to meet the present interim standard, the chemical loading should not affect the thermal properties of the insulation. As discussed earlier in this Notice, the potential economic costs associated with labeling, qualification and certification are not expected to be great. In addition, available information does not show that the effective date is unreasonable. Some manufacturers may decide to go out of business rather than make an additional investment in acquiring skill and equipment to meet the requirements of the amendment. However, uncertain future demand for cellulose insulation, rather than the amendment, may be the critical factor for those companies who are considering leaving the industry.

Having evaluated all of the available information, the Commission does not believe that this information shows that the amendment is not necessary to protect the consumer or would create an undue burden on persons subject to the interim standard. The Commission has consulted with the Secretary of Energy concerning the amendment. The Secretary of Energy has recommended that the Commission issue the amendment to the interim standard for cellulose insulation. In light of the Commission's affirmative obligation resulting from Pub. L. 95-319 to issue the amendment, and in light of the inability of the Commission to determine that the amendment is not necessary or would present an undue burden, the Commission concludes that the amendment should be issued. Accordingly, the Commission is issuing the amendment to the interim standard.

VI. Environmental Considerations

The Commission has examined the potential environmental impacts of the amendment, including the potential environmental impact that could result from increased use of urea-formaldehyde insulation and increased demand for boric acid. (These potential environmental impacts are also discussed in the preamble to the certification rule, published elsewhere in this issue of the Federal Register.) In the proposed amendment the Commission solicited comments on the potential environmental impacts of the amendment. The Commission did not

receive any comments on this issue. Based on an environmental assessment of the amendment, the Commission believes that the amendment will have no significant environmental impact affecting the quality of the environment that would require the Commission to prepare an environmental impact statement. A copy of the environmental assessment is available in the Office of the Secretary of the Commission.

VII. Opportunity to Seek Judicial Review

Section 35(c)(2)(G) of the act, as amended by Pub. L. 95–319, provides that the provisions of section 11 do not apply to judicial review of any amendment to the interim standard. For the purposes of fairness to all interested parties concerning the opportunity to seek judicial review of any final amendment, the Commission believes it is important to set a specific date and time at which the final amendment is considered to be final agency action under section 704 of the Administrative Procedure Act (5 U.S.C. 704). The Commission believes that this date and time will be at one o'clock p.m. Eastern Daylight Time, the date the final amendment is published in the Federal Register. Since the Commission is publishing this amendment on the latest date provided by statute for publication, this date is earlier than the date that was suggested in the proposal (44 FR 12889, March 8, 1979). The Commission believes that this date and time is reasonable since it will provide all interested parties an equal and fair opportunity to review the final amendment before deciding whether they wish to seek judicial review. This date is substantially before the delayed effective date of October 16, 1979.

VIII. Conclusion

In accordance with the provisions of the "Emergency Interim Consumer Product Safety Standard Act of 1978", Pub. L. 95–319, the Commission issues the revised flame resistance and corrosiveness provisions of GSA Specification HH–I–515D, along with the changes described below, as an amendment to the Commission's interim standard for cellulose insulation.

Therefore, pursuant to provisions of the Consumer Product Safety Act, as amended, (sec. 35(c)(2), Pub. L. 95–319, 92 Stat. 388–389, 15 U.S.C. 2082), the Commission amends the Interim Safety Standard for Cellulose Insulation by substituting a new Part 1209 of Title 16 CFR, for the present 16 CFR Part 1209 published at 43 FR 35240 (August 8, 1978), as follows:

PART 1209—INTERIM SAFETY STANDARD FOR CELLULOSE INSULATION

Subpart A—The Standard

Sec.

1209.1 Scope and application.
1209.2 Definitions and measurements.
1209.3 General requirements.
1209.4 Test procedures for settled density.
1209.5 Test procedures for corrosiveness.
1209.6 Test procedures for critical radiant flux.
1209.7 Test procedures for smoldering combustion.
1209.8 Procedure for calibration of radiation instrumentation.
1209.9 Labeling requirement.
1209.10 Certification and enforcement.
1209.11 Effective date.

Authority: Sec. 35(c)(2), Pub. L. 95–319, 92 Stat. 388–389; (15 U.S.C. 2082).

§ 1209.1 Scope and application.

(a) *Scope.* This Part 1209, an interim consumer product safety standard, prescribes flame resistance and corrosiveness requirements for cellulose insulation that is a consumer product. These requirements are intended to reduce or eliminate an unreasonable risk of injury to consumers from flammable and corrosive cellulose insulation. The requirements are based upon the flame resistance and corrosiveness requirements of General Services Administration Specification HH–I–515D.

(b) *Application.* This Part 1209 shall apply to cellulose insulation that is a consumer product, that is, cellulose insulation produced or distributed for sale to, or for the personal use, consumption, or enjoyment of consumers in or around a permanent or temporary household or residence, a school, in recreation, or otherwise. The interim standard applies to cellulose insulation that is produced or distributed for sale to consumers for their direct installation or use, as well as cellulose insulation that is produced or distributed for installation by professionals. This Part 1209 applies only to cellulose insulation manufactured after October 15, 1979.

§ 1209.2 Definitions and measurements.

(a) As used in this Part 1209, "Cellulose insulation" means cellulosic fiber, loose fill, thermal insulation that is suitable for blowing or pouring applications.

(b) The definitions given in section 3 of the Consumer Product Safety Act are applicable to this Part 1209.

(c) For the purposes of conformance with the technical requirements of this standard, the figures are given in the metric system of measurement. The inch-pound system approximations of these figures are provided in parentheses for convenience and information only. For numerical quantities for which no specific tolerances are given, the tolerance shall be one half of the unit value of the last significant digit given in the dimension. Where numerical quantities are given without tolerances in both the metric and inch-pound system of measurements, the tolerance shall be one half of the last significant digit of the metric equivalent of the numerical quantity.

(d) The specifications and dimensions in the test methods below are given in metric units, with the English equivalents in parentheses. For enforcement purposes the Commission will use metric units.

§ 1209.3 General requirements.

(a) All cellulose insulation to which this interim standard applies, as described in § 1209.1, shall be noncorrosive when tested in accordance with the test procedures at § 1209.5 and evaluated using the criteria at § 1209.5(c). This means that after the product is tested, the six metal coupons used in the test shall not have any perforations (excluding notches extending into the coupon 3 mm or less from any edge) when the coupons are observed over a 40–W appliance light bulb.

(b) All cellulose insulation to which this interim standard applies, as described in § 1209.1, shall have a critical radiant flux equal to or greater than 0.12 W/cm^2 for each of the three specimens when tested in accordance with the test procedures at § 1209.6.

(c) All cellulose insulation to which this interim standard applies, as described in § 1209.1, shall have no evidence of flaming combustion and shall also have weight loss of 15 percent or less of the initial weight, for each of the three specimens, when tested in accordance with the test procedures at § 1209.7.

(d) All containers of cellulose insulation to which this interim standard applies, as described in § 1209.1, shall have a labeling statement in accordance with the labeling requirements at § 1209.9.

§ 1209.4 Test procedures for determining settled density.

The settled density of lose fill insulation must be determined before the corrosiveness test (1209.5) and the smoldering combustion test (1209.7) can be performed. This section describes the

procedure for determining the settled density of loose fill insulation.

(a) *Apparatus and materials:*

(1) An insulation specimen container with a flat bottom and an inside diameter of 15.0±1 cm, straight sides [without a flared lip or spout, (Apparatus #1)]. The height of the beaker shall be such that the distance between the bottom of the cyclone and the top edge of the beaker is 8.5 cm±1.0 cm. (3.39 in±.39 in).

(2) A flat-rigid disc with a total weight of 75±5 g (2.65±0.18 oz) and of a suitable diameter to fit loosely into the specimen container. Weight may be added to the center of the disc to bring the total weight to the required 75±5 g (Apparatus #2).

(3) A balance of 2 kg (4.4 lbs) capacity accurate at least to 0.2 g (0.007 oz) (Apparatus #3).

(4) Blower apparatus, two units (supply and overflow) meeting the following specifications: (The Commission staff has found that a Breuer Electric Manufacturing Co., Model 98805 blower is suitable for this purpose, although other blowers may be suitable.) (Apparatus #4).

(i) Each blower apparatus shall be capable of blowing an average of 272.2 kg (600 lbs.) of insulation per hour.

(ii) Each blower apparatus shall have a nominal air flow of 2.1 cm^3/min. (75 ft^3/min.)

(iii) Each blower apparatus shall have a nominal motor speed of 16,450 revolutions per minute at 115 VAC.

(5) A shaker unit capable of shaking 4.5 kg (10 lb) of weight with a vertical motion of 0.5 g Root Mean Square (RMS) acceleration at an approximate frequency of 9 Hertz (Hz) and displacement of approximately 1.17 cm ($^{15}/_{32}$±$^{1}/_{32}$ in.) ±.08 cm peak to peak. (The Commission staff has found that a Tyler Industries, Portable Sieve Shaker Model Rx-24 is suitable for this purpose, although other shakers may be suitable.) (Apparatus #5).

(6) Fill chamber with inside dimensions of 45.7 cm (18 in) high × 38.1 cm (15 in) wide × 38.1 cm (15 in) deep, with covered openings that will allow a radiant panel tray to be slid through the chamber, (see Figure 1 for details) (Apparatus #6).

(7) A cyclone receiver (see Figure 2 for complete details). (Apparatus #7).

(8) Various lengths of nominally 2-inch diameter hose (see Figure 1 for details), as follows:

(i) A supply source hose, 274.3±5.1 cm (9 ft±2 in) (Apparatus #8(i)).

(ii) A cyclone receiver hose, 182.9±5.1 cm (6 ft±2 in) (Apparatus #8(ii)).

(iii) A fill chamber exit hose, 91,.4±5.1 cm (3 ft±2 in) (Apparatus #8(iii)).

(iv) An overflow exhaust hose, length as needed (Apparatus #8(iv)).

(9) Blower Control(s) capable of operating the two blowers at 40 volts RMS. As an example, a variac for each of the two blowers with sufficient rating to operate at 40 volts and 12 amperes RMS would be acceptable (Apparatus #9).

(10) An insulation holding container to hold a sufficient quantity of insulation to fill the specimen container four times.

(11) A garden rake, 50.8 cm (20 in) wide (Apparatus #11).

(12) A shovel (Apparatus #12).

(b) *Conditioning:* Specimens shall be conditioned to equilibrium at 21±5° C (69.8±9° F) and 50±5 % relative humidity. A less than 1% change in net weight of the specimen in two consecutive weighings with two hours between each weighing constitutes equilibrium.

(c) *Test specimen preparation:*

(1) *Insulation intended for pneumatic applications.* If the insulation is intended for pneumatic applications, the test specimens shall be prepared in the following manner:

(i) If ambient laboratory conditions are different from the conditioning requirements specified in (b) above, begin testing the specimen for settled density within 10 minutes after it has been removed from the conditioned area.

(ii) Pour the conditioned insulation into the holding box (Apparatus #10) in sufficient quantity to fill the specimen container (Apparatus #1 shown in Figure 1) four times. Manually break up any large clumps of material that might cause feeding problems.

(2) *Insulation intended for pouring applications:* If the insulation is intended for pouring applications, the test specimens shall be prepared in the following manner:

(i) If ambient laboratory conditions are different from the conditioning requirements specified in (b) above, begin testing 10 minutes after it has been removed from the conditioned area.

(ii) Pour loose fill insulation into a simulated attic space until full. The attic space shall be formed by two nominal 2 x 6 (243 cm) (8 ft) long joists placed 40.6 cm (16 in) on center with 1.27 cm (½ in) plywood nailed to the ends and bottom. Fluff the material with a garden rake (Apparatus #11), applyilng a series of small amplitude strokes while moving the rake slowly along the joist. Repeat the fluffing process six times.

(d) *Procedures:*

(1) *Procedures for insulation intended for pneumatic applications.* If the insulation is intended for pneumatic applications, conduct the following procedures:

(1) The test shall be conducted in an area conditioned to the requirements of § 1209.4(b).

(ii) The apparatus shall be set up as shown in Figure 1. (Apparatus #9 and #10 are not shown in Figure 1, but are described at § 1209.4(a)). Connect one end of the supply source hose (Apparatus #8.i) to the intake of the supply blower (Apparatus #4). The other end will be used to pick up insulation from the holding container (Apparatus #10). Connect one end of the cyclone receiver hose (Apparatus #8.ii) to the outlet of the supply blower and the other end to the cyclone receiver (Apparatus #7). Connect one end of the fill chamber exit hose (Apparatus #8.iii) to the intake of the overflow blower (Apparatus #4) and the other end to the fill chamber (Apparatus #6). The fill chamber shall be placed on a flat and level surface. Connect one end of the variable length overflow exhaust hose (Apparatus #8.iv) to the outlet of the overflow blower. The other end should be conveniently placed to reduce insulation dust in the test area.

(iii) Weigh the empty insulation specimen container and record its weight.

(iv) Place the empty insulation specimen container in the fill chamber (Apparatus #6) centered under the cyclone reciever (Apparatus #7), and close the front cover.

(v) Adjust the blower control(s) (Apparatus #9) such that the supply and overflow blowers will operate at a no load voltage of 40 volts RMS.

(vi) Turn on the blowers simultaneously and proceed to fill the insulation specimen container by picking up material from the holding container using the supply source hose.

(vii) The container may fill unevenly, i.e. a void may tend to form off center in the container. If this occurs, stop the blowing process and rotate the container 180 degrees and continue the blowing process until the container just begins to overflow. If, for any reason, the filling process is interrupted for more than one minute or for more than the one time allowed to rotate the container, begin the process again.

(viii) Gently screed the excess material using a straight edge so as to leave a uniform surface of the insulation flush with the top of the container.

(ix) Weigh the filled and leveled container and record the weight. Take care not to bump or jar the container so

as not to introduce any extraneous settling of the insulation.

(x) Cover the container to prevent spilling and secure the container to the shaker. Operate the shaker for a period of 5 minutes±15 seconds.

(xi) Remove the container from the shaker and uncover, taking care not to bump or jar it. Lower the disc (Apparatus #2) very slowly into the container until it starts to contact the insulation. At this point, release the disc and allow it to settle onto the insulation under its own weight.

(xii) Measure the volume of the space occupied by the settled insulation using the bottom edge of the disc as the upper datum point. If the disc is not level, measure the high and low points of the bottom of the disc and average the readings and use this as the height measurement in calculating the volume (V_s). This settled insulation volume and insulation weight (w) shall be used to calculate the settled density.

(xiii) Repeat this procedure [steps (i through xi)] using another specimen of the insulation until four settled densities are obtained for a given material. Then average these figures to arrive at a final settled density.

(2) *Procedures for insulation intended for pouring applications.* If the insulation is intended for pouring applications, conduct the following procedures:

(i) Weigh the empty insulation specimen container and record its weight.

(ii) Using a shovel (Apparatus #12) remove insulation from the simulated attic space and place it into the specimen container until the container just begins to overflow.

(iii) Follow steps (vi) through (xii) as specified under *Procedures for insulation intended for pneumatic applications.*

(iv) Repeat this procedure (steps (i) through (iii)) using another specimen of the insulation until four settled densities are obtained for a given material. Then average these figures to arrive at a final settled density.

(e) *Insulation intended for pouring and pneumatic applications.* If the insulation is intended for both pouring and pneumatic applications, or if it is uncertain whether the insulation will be poured or installed pneumatically, the insulation shall be tested for settled density using the test specimen preparation and test procedures at § 1209.4 (c) and (d) for each of the applications. The larger of the two settled density values shall be used in performing the corrosiveness test at § 1209.5 and the smoldering combustion test at § 1209.7.

(f) *Calculations:*

Calculate the settled density of each specimen using the following formula:

Settled Density in $kg/m^3 = W/V_s$, where

W = combined weight of the container and insulation in grams, minus the weight of the container in grams.

V_s = volume of insulation in liters after shaking.

§ 1209.5 Test procedures for corrosiveness.

This section prescribes the procedures for determining the corrosiveness of cellulose insulation. Cellulose insulation shall be tested for corrosiveness using the measured settled density, obtained by following the test procedure at § 1209.4, to calculate the amount of distilled or deionized water to add to the test specimens. Determination of corrosiveness shall be in accordance with the following test procedure:

(a) *Apparatus and materials.* (1) Humidity chamber. A forced-air humidity chamber capable of maintaining 48.9± 1.7°C (120±3°F) and 97 ±1.5 percent relative humidity.

(2) Crystallizing dishes. Six glass crystallizing dishes, 90 mm (3.54 in) diameter by 50 mm (1.9 in) height.

(3) Test coupons.

(i) Two aluminum coupons. 3003 bare aluminum, zero temper.

(ii) Two copper coupons. ASTM B 152, type ETP, Cabra No. 110 soft copper.

(iii) Two steel coupons. Low carbon, commercial quality, cold rolled, less than 30 carbon content, shim steel.

Each coupon shall be 50.8 by 50.8 mm (2 by 2 in) by 0.076 mm (0.003 in) thick metal free of tears, punctures, or crimps.

(4) Test specimens: Six test specimens of insulation shall be used for one test. Each specimen shall weigh 20g (0.7 oz).

(b) *Procedure.* (1) *General procedures for cleaning all metal coupons.* The metal coupons shall be cleaned by the following method:

(i) At no time during the fabrication, cleaning or testing shall the metal coupons be touched by ungloved hands.

(ii) Gloves shall be clean and in good condition.

(iii) All chemicals used shall be of American Chemical society reagent grade or better, free from oily residues and other contaminants.

(iv) Water shall be distilled or deionized water.

(v) Handle cleaned coupons only with clean forceps.

(vi) In order to avoid exposing laboratory personnel to toxic fumes, the commission recommends that all cleaning procedures be performed in a fume hood.

(vii) Clean the coupons by vapor degreasing with 1,1,1—trichloroethane for ten minutes. following vapor degreasing, subject the coupons to caustic and/or detergent washing as appropriate. Following caustic or detergent washing, rinse the coupons in flowing water to remove residues. Inspect each coupon for a water-break free surface. (A water-break is a break, separation, beading or retraction of the water film as the coupon is held vertically after wetting. As the coupons are cleaned, the water film should become gradually thinner at the top and heavier at the bottom.) Hot air dry the coupons at 105°C (221° F).

(2) Specimens of cellulose insulation submitted for testing shall be blown, combed, or otherwise mixed to reasonably assure homegeneity in the cellulose insulation test specimens.

(3) Before presaturating each 20g (0.7 oz) test specimen, subdivide it into two 10g (0.35 oz) portions. The quantity of distilled or deionized water to be used for each 10g (0.35 oz) portion shall be determined using the following formula:

$$\text{ml distilled water} = \frac{46}{\text{settled density, } Kg/m^3} \times 75$$

or

$$\frac{2.9}{\text{settled density, } lb/ft^3} \times 75$$

(4) Presaturate each 10g (0.35 oz) portion with the determined amount of water. Place one presaturated 10g (0.35 oz) portion into a crystallizing dish, tamp level using the bottom of a clean suitably sized glass beaker. Place a metal coupon onto the presaturated insulation portion and center it in a horizontal plane. Place the other presaturated 10g (0.35 oz) portion into the crystallizing dish on the metal coupon and tamp the composite specimen (metal coupon plus saturated insulation in the crystallizing dish) to assure an even distribution of this material and to assure good contact of the insulation with the metal. Exercise care in preparing the composite specimens to eliminate air pockets from forming next to the metal coupons.

(5) Do not cover the crystallizing dish. (Care should be taken to avoid evaporation from the composite

specimen while it is being prepared until it is placed in the humidity chamber.) If dripping occurs in the chamber, position a drip guard in the chamber to divert condensation to the chamber floor. Repeat the above for the other metal coupons. Place all six composite specimens into the humidity chamber. The chamber shall be preconditioned to 48.9± 1.7° C (120± 3° F) and 97± 1.5 percent relative humidity. The specimens shall remain in the chamber for 336± 4 hours. (Keep the chamber door open a minimum of time while placing composite specimens in and removing them from the chamber.)

(6) Upon completion of the test disassemble the composite specimens. Thoroughly wash the metal coupons under running water and lightly brush them using a soft nylon bristle brush or equivalent to remove loose corrosion products. Remove the remaining corrosion products from the metal coupons by cleaning them in accordance with the following practices:[1]

(i) Technique #1—Electrolytic Cleaning. This technique can be used for post-cleaning the tested copper, steel and aluminum coupons.

Description: Electrolyze the coupons as follows: Make a solution containing 28 ml of sulfuric acid (specific gravity 1.84), 2 ml of organic inhibitor, e.g. aobut 0.5 g/liter of such inhibitors as diorthotolyl thiourea, quinoline ethiodide, or betanaphthol quinoline may be used, and 970 ml of water. The solution shall be at 75°C (167°F). The anode shall be carbon or lead, and the cathode shall be one metal coupon. The electrolyzing shall run for 3 minutes at a current density of 20 A/dm ^{2}. *Caution:* If lead anodes are used, lead may deposit on the coupon. If the coupon is resistant to nitric acid, the lead may be removed by a flash dip in 1 + 1 nitric acid (plus water). To avoid injury in this and subsequent techniques when mixing acid and water, gradually pour the acid into the water with continuous stirring, provide cooling if necessary.

(ii) Technique #2—Copper. This technique or Technique #1 can be used for post-cleaning the tested copper coupons only.

Description: Make a solution containing 500 ml of hydrochloric acid (specific gravity 1.19), 100 ml of sulfuric acid (specific gravity 1.84), and 400 ml of water. To avoid injury, prepare the solution by slowly adding the sulfuric acid to the water with continuous stirring. Cool, then add the hydrochloric acid slowly with continuous stirring. The solution shall be at room temperature. Dip the coupons in the solution for 1 to 3 minutes.

(iii) Technique #3—Steel. This technique or technique #1 can be used for post-cleaning the tested steel coupons only.

Description: Use one of the following two solutions:

Solution #1. Add 100 ml of sulfuric acid (specific gravity 1.84), 1.5 ml organic inhibitor, and water to make a 1 liter solution. The solution shall be 50°C (120°F). Dip the coupons in this solution.

Solution #2 (also referred to as Clarke's solution). Add 20g of antimony trioxide and 50 g of stannous chloride to 1 liter of hydrochloric acid (specific gravity 1.19). The solution shall be stirred and be used at room temperature. Dip the coupons in this solution stirring the solution at a rate such that deformation of the coupons does not occur. This dipping shall last for up to 25 minutes.

(iv) Technique #4—Aluminum. This technique or technique #1 can be used for post-cleaning the tested aluminum coupons only.

Description: Make a 1 liter solution by adding 20g of chromic acid, and 50 ml of phosphoric acid (specific gravity 1.69), to water. The solution shall be 80° C (176° F). Dip the coupons in this solution for 5–10 minutes. If a film remains, dip the coupons in nitric acid (specific gravity 1.42) for 1 minute. Repeat the chromic acid dip. Nitric acid alone may be used if there are no deposits.

(7) After cleaning, examine the metal coupons over a 40–W appliance light bulb for perforation.

(c) *Noncorrosiveness.* Noncorrosiveness shall be determined by the absence of any perforations (excluding notches which extend into the coupon 3 mm or less from any edge) on each of the six test coupons when the coupons are observed over a 40–W appliance light bulb.

§ 1209.6 Test procedures for critical radiant flux.

This section provides the test procedure for determining the critical radiant flux of exposed attic floor insulation using a radiant heat energy source.

(a) *Apparatus and description of test procedure.* Test chamber (Figures 3 and 4 subsection (b) of this section). An air-gas fueled radiant heat energy panel or equivalent panel inclined at 30° above and directed at a horizontally-mounted attic floor insulation specimen. The radiant panel generates a radiant energy flux distribution ranging along the approximately 100-cm length of the test specimen from a nominal maximum of 1.0 W/cm.^{2} to a minimum of 0.1 W/cm^2. The test is initiated by open flame ignition from a pilot burner. The distance burned to flame-out is converted to W/cm^2 from the flux profile graph (Figure 8) and reported as critical radiant flux, W/cm^2. Section 1209.8 provides a procedure for calibrating the radiation pyrometer used to standardize the thermal output of the panel.

(b) *Construction and instrumentation of the radiant panel test chamber.* The radiant panel test chamber shall be constructed and instrumented as follows:

(1) The radiant panel test chamber employed for this test shall be located in a draft protected area maintained at 21±3° C (69.8±9° F) and relative humidity of 50±20%. The radiant panel test chamber, (Figures 3 and 4) shall consist of an enclosure 140 cm (55 in) long by 50 cm (19½ in) deep by 71 cm (28 in) above the test specimen. The sides, ends, and top shall be of 1.3 cm nominal (½ in) calcium silicate board, such as Marinite I, 0.74 g/cm^3 (46 lb/ft^3) nominal density, with a thermal conductivity at 177° C (350° F) of 1.11 cal (g)/hr cm^2°C/cm [0.89 Btu/(hr) (ft^2) (°F/in)]. One side shall be provided with an approximately 10 cm x 110 cm (4 x 44 inches) draft tight fire resistant glass window so that the entire length of the test specimen may be observed from ourside the fire test chamber. On the same side and below the observation window is a door which, when open, allows the specimen platform to be moved out for mounting or removal of test specimens. A draft tight, fire resistant observation window may be installed at the low flux end of the chamber.

(2) The bottom of the test chamber shall consist of a sliding steel platform which has provisions for rigidly securing the test specimen holder in a fixed and level position. The free, or air access, area around the platform shall be in the range of 1935–3225 cm^2 (300–500 square in). The top of the chamber shall have an exhaust stack with interior dimensions of 10.2 cm (4 in) wide by 38 cm (15 in) deep by 31.8 cm (12.5 in) high at the opposite end of the chamber from the radiant energy source. The radiant heat energy source shall be a panel of porous refractory material mounted in a cast iron frame, with a radiation surface of 30.5 x 45.7 cm nominal (12 by 18 in). The panel fuel system shall consist of a venturi-type aspirator or equivalent system for mixing gas and air at

[1] These practices are the recommended practices in "ASTM G1—Standard Recommended Practice for Preparing, Cleaning, and Evaluating Corrosion Test Specimens," published by American Society for Testing and Materials, 1916 Race Street, Philadelphia, Pa. 19103.

approximately atmospheric pressure, a clean dry air supply capable of providing 28.3 NTP (Normal Temperature and Pressure m^3 per hr (1000 standard cubic feet per hour) at 7.6 cm (3.0 in) of water, and suitable instrumentation for monitoring and controlling the flow of fuel to the panel.

(3) The radiant heat energy panel shall be mounted in the chamber 30±0.5° to the horizontal specimen plane. The horizontal distance from the 0 mark on the specimen fixture to the bottom edge (projected) of the radiating surface of the panel is 8.9 cm±0.1 (3½±1/32 in). The panel to specimen vertical distance is 14.0 cm±0.1 (5½±1/32 in) (see Figure 5). The angle and dimensions given above are critical in order to obtain the required radiant flux. The radiation pyrometer for standardizing the thermal output of the panel shall be suitable for viewing a circular area 25.0 cm (10 in) in diameter at a range of about 1.37 m (54 in). It shall be calibrated over the black body temperature range of 490–510° C (914–950° F) in accordance with the procedure described in Section 1209.8. A high impedance voltmeter with a suitable millivolt range shall be used to monitor the output of the radiation pyrometer described. The dummy holder (see Figure 6), shall be constructed from 14 gauge heat-resistant stainless steel (AISI Type 300 (UNA–N08330)) or equivalent thickness 0.198 cm (0.078 in), having overall dimension of 114 cm (45 in) by 32 cm (12¾ in) with a specimen opening of 20 cm (7.9 inches) by 100 cm (39.4 in). Six slots are cut in the flange on either side of the holder to reduce warping. The holder is fastened to the platform with two stud bolts at each end.

(4) The specimen tray (see Figure 7) shall be constructed from 14 gauge heat-resistant stainless steel (AISI Type 300 (UNA–N08330)) or equivalent, thickness 0.198 cm (0.078 in). The depth of the tray is 5.0±0.2 cm (2±5/64 in). The flanges of the specimen tray are drilled to accommodate two stud bolts at each end; the bottom surface of the flange is 2.1±0.1 cm (0.83±0.04 in) below the top edge of the specimen tray. The overall dimensions of the tray and the width of the flanges are not critical and should be chosen so that the tray essentially fills the open space in the sliding platform. Tray must be adequate to contain a specimen at least 100 cm long and 25 cm wide. It is important to note that the zero reference point on the dummy specimen coincides with the pilot burner flame impingement point (see Figure 5).

(5) The pilot burner used to ignite the specimen shall be a propane venturi torch with an axially sysmmetric burner tip having a propane supply tube with an orifice diameter of 0.0076±0.0013 cm (0.003±0.0005 in). In operation, the propane flow is adjusted to give a pencil flame blue inner cone length of 1.3 cm (½ in). The pilot burner is positioned so that the flame generated will impinge on the centerline of the specimen at the zero reference point and at right angles to the specimen length (see Figures 3 and 4). The burner shall be capable of being swung out of the ignition position so that the flame is horizontal and at least 5 cm (2 in) above the specimen plane.

(6) Two 3.2 mm nominal (⅛ in) diameter stainless steel sheathed, grounded junction chromel alumel thermocouples are located in the flooring radiant panel test chamber (see Figures 3 and 4). Thermocouples shall be kept clean to ensure accuracy of readout. The chamber thermocouple is located in the longitudinal central vertical plane of the chamber 2.5 cm±0.1 (1±1/32 in) down from the top and 10.2 cm±0.1 (4 in±1/32) back from the inside of the exhaust stack. The exhaust stack thermocouple is centrally located 15.2±0.1 cm (6±1/32 in) from the top. A temperature indicating device with a range of 100–500°-C (212–932° F) may be used to determine the chamber temperatures prior to a test.

(7) An exhaust duct with a capacity of 28.3–85 NTP m^3 per minute (1000–3000 standard cubic feet per minute) decoupled from the chamber stack by at least 7.6 cm (3 in) on all sides and with an effective area of the canopy slightly larger than the plane area of the chamber with the specimen platform in the out position shall be used to remove combustion products from the chamber. With the panel turned on and dummy specimen in place, there shall be no measurable difference in air flow through the chamber stack with the exhaust on or off.

(8) The dummy specimen which is used in the flux profile determination shall be made of 1.9±0.1 cm (¾±1/32 in) 0.74 g/cm^3 (46 lb/ft^3) nominal density calcium silicate board, such as Marinite I (see Figure 6). It is 25 cm (10 in) wide by 107 cm (42 in) long with 2.7±0.1 cm (1 1/16±1/32 in) diameter holes centered on and along the centerline at the 10, 20, 30, 40, 50, 60, 70, 80, 90 cm locations (within ±0.1 cm), measured from the zero reference point at the maximum flux end of the specimen. The total heat flux transducer used to determine the flux profile of the chamber in conjunction with the dummy specimen should be of the Schmidt-Boelter type, having a range of 0–1.5 W/cm^2 (0–1.32 Btu/ft^2 s), and shall be calibrated over the operating flux level range of .10 to 1.5 W/cm^2 in accordance with the procedure outlined in Section 1209.8. The incoming cooling water flowing through the instrument shall be 15–25° C (59–77° F). A high impedance voltmeter with a resolution of at least 0.01 mV shall be used to measure the output of the total heat flux transducer during the flux profile determination. A timer shall be used for measuring preheat and pilot contact time.

(c) *Safety procedures.* The possibility of a gas-air fuel explosion in the test chamber should be recognized. Suitable safeguards consistent with sound engineering practice should be installed in the panel fuel supply system. These may include one or more of the following: (1) a gas feed cut-off activated when the air supply fails, (2) a fire sensor directed at the panel surface that stops fuel flow when the panel flame goes out, (3) a commercial gas water heater or gas-fired furnace pilot burner control thermostatic shut-off, which is activated when the gas supply fails, or other suitable and approved device. Manual reset is considered a desirable feature of any safeguard system used. In view of the potential hazard from products of combustion, the exhaust system must be so designed and operated that the laboratory environment is protected from smoke and gas. The operator should be instructed to minimize exposure to combustion products by following sound safety practices, such as ensuring that the exhaust system is working properly and wearing appropriate clothing, including gloves.

(d) *Test specimens.* (1) *Specimens of insulation intended for pneumatic applications.*

(i) Insulation shall be installed into the specimen tray using the blower/cyclone apparatus described in § 1209.4(a).

(ii) Insulation shall be conditioned as described in § 1209.4(b).

(iii) Apparatus #4, 6, 7, 8, 9 and 10 shall be used as described in § 1209.4(d)(1)(i) with the following additional requirements.

(iv) The fill chamber (apparatus #8) shall be equipped with openings in the front and back so that a radiant panel specimen tray can be slid through the fill chamber.

(v) Adjust the blower control(s) (apparatus #9) such that the supply and overflow blowers will operate at a no load voltage of 40 volts RMS.

(vi) Turn on the blowers simultaneously and proceed to fill the fill chamber by picking up material from the box using the supply source hose.

Large clumps of insulation shall be broken by hand before feeding them into the hose. Continue filling the chamber until large amounts of insulation are being drawn into the overflow hose.

(vii) Slowly slide the specimen tray through the fill chamber so that the low flux end of the tray is parallel with the back of the fill chamber filling the tray by sliding the tray forward to allow an excess of insulation to build up in the tray.

(viii) Shut off the blowers and remove the specimen tray and gently screed the insulation so that the insulation is level across the top of the tray. Take care not to compact the insulation or to leave large voids in the material. The tray may now be inserted into the radiant panel.

(2) *Specimens of insulation intended for pouring applications.* Insulation intended for pouring applications shall be poured into the tray until the tray is overfilled and then carefully screeded to the top of the the tray taking care not to compact the insulation or leave large voids in the surface of the material.

(3) *Specimens of insulation intended for pouring and pneumatic applications.* If the insulation is intended for both pouring and pneumatic applications, or if it is uncertain whether the insulation will be poured or blown, the insulation shall be tested using the test procedures at § 1209.6(d) (1) and (2) for each of the applications. Three specimens shall be tested under the test procedure for each application. All of the specimens shall meet the criteria at 1209.3(b) for passing the attic floor radiant panel test.

(e) *Radiant heat energy flux profile standardization.* In a continuing program of tests, determine the flux profile at least once a week. Where the time interval between tests is greater than one week, determine the flux profile at the start of the test series.

(1) Mount the dummy specimen in the mounting frame and attach the assembly to the sliding platform. With the sliding platform out of the chamber, ignite the radiant panel. Allow the unit to heat for 1 hour. The pilot burner is off during this determination. Adjust the fuel mixture to give an air-rich flame. Make fuel flow settings to bring the panel to an apparent black body temperature as measured by the radiation pyrometer, of approximately 500° C (932° F), and bring the chamber to a temperature of approximately 180° C (356° F). When equilibrium has been established, move the specimen platform into the chamber. Allow 0.5 hour for the closed chamber to reach equilibrium.

(2) Measure the radiant heat energy flux level at the 40 cm point with the total flux meter instrumentation. This is done by inserting the flux meter in the opening so that its detecting plane is 0.16–0.32 cm (1/16-1/8 inch) above and parallel to the plane of the dummy specimen and reading its output after 30±10 seconds. If the level is within the limits specified, the flux profile determination is started. If it is not, make the necessary adjustments in the panel fuel flow. A suggested flux profile data log format is shown in Figure 9.

(3) The test shall be run under chamber operating conditions which give a flux profile as shown in Figure 8. The radiant heat energy incident on the dummy specimen shall be between 0.87 and .95 W/cm² (0.77 and .83 Btu/ft² sec) at the 20 cm point, between 0.48 and 0.52 W/cm² (0.42 and 0.46 Btu/ft² sec) at the 40 cm point, and between 0.22 and 0.26 W/cm² (0.19 and 0.23 Btu/ft² sec) at the 60 cm point. Insert the flux meter in the 10 cm opening, following the procedure given above. Read the millivolt output at 30±10 seconds and proceed to the 20 cm point. Repeat the 10 cm procedure. The 30 to 90 cm flux levels are determined in the same manner. Following the 90 cm measurement, make a check reading at 40 cm. If this is within the limits set forth, the test chamber is in calibration, and the profile determination is completed. If not, carefully adjust fuel flow, allow 0.5 hour for equilibrium and repeat the procedure. Plot the radiant heat energy flux data as a function of distance along the specimen plane on rectangular coordinate graph paper. Carefully draw the best smooth curve through the data points. This curve will hereafter be referred to as the flux profile curve.

(4) Determine the open chamber apparent black body and chamber temperatures that are identified with the standard flux profile by opening the door and moving the specimen platform out. Allow 0.5 hour for the chamber to reach equilibrium. Read the radiation pyrometer output and record the apparent black body temperature. This is the temperature setting that can be used in subsequent test work in lieu of measuring the radiant flux at 20 cm, 40 cm, and 60 cm using the dummy specimen. The chamber temperature also shall be determined again after 0.5 hour and is an added check on operating conditions.

(f) *Conditioning.* Test specimens shall be conditioned to equilibrium at 21±3° C (69.8±5.4° F) and a relative humidity of 50±5 percent immediately prior to testing. A less than 1% change in net weight of the specimen in two consecutive weighings with two hours between each weighing constitutes equilibrium. The maximum cumulative time a conditioned sample may be exposed to conditions different from 21±3° C (69.8±5.4° F) and relative humidity of 50±5% before insertion in to the radiant panel chamber for testing is 10 minutes.

(g) *Test Procedure.* (1) With the sliding platform out of the chamber, ignite the radiant panel. Allow the unit to heat for 1 hour. It is recommended that a sheet of inorganic millboard be used to cover the opening when the hinged portion of the front panel is open and the specimen platform is moved out of the chamber. The millboard is used to prevent heating of the specimen and to protect the operator. Read the panel apparent black body temperature and the chamber temperature. When these temperatures are in agreement to within ±5° C (±9° F) with those determined previously, during the flux profile standardization procedure, the chamber is ready for use.

(2) Mount the specimen tray with insulation on the sliding platform and position with stud bolts (see Figure 9). Ignite the pilot burner, move the specimen into the chamber, and close the door. Start the timer. After 2 minutes ±5 seconds preheat, with the pilot burner on and set so that the flame is horizontal and about 5 cm above the specimen, bring the pilot burner flame into contact with the center of the specimen at the 0 mark. Leave the pilot burner flame in contact with the specimen for 2 minutes ±5 seconds, or until all flaming other than in the area of the pilot burner has ceased, then remove to a position of at least 5 cm above the specimen and leave burning until the test is terminated.

(3) If the specimen does not ignite within 2 minutes following pilot burner flame application, the test is terminated by extinguishing the pilot burner flame. For specimens that do ignite, the test is continued until the flame goes out. When the test is completed, the door is opened, and the specimen platform is pulled out.

(4) Measure the distance burned, (the point of farthest advance of the flame front) to the nearest 0.1 cm (.03 in). From the flux profile curve, convert the distance to W/cm² (Btu/ft² sec) critical radiant heat flux at flame out. Read to two significant figures. A suggested data log format is shown in Figure 10.

(5) Remove the specimen tray from the moveable platform. The succeeding test can begin as soon as the panel apparent black body temperature and chamber temperature are verified. The specimen tray should be at room temperature before the next specimen is inserted.

§ 1209.7 Test procedures for smoldering combustion.

This section provides the test method for determining smoldering combustion characteristics of materials used for thermal insulation. This test shall be conducted on materials at the measured settled density as provided in 1209.4.

(a) *Apparatus.* (1) The specimen holder shall be an open-top 20±0.2 cm (7.87±.08 in) square box, 10±0.2 cm (3.94±.08 in) in height, fabricated from a single piece of 0.61±0.08 mm thick (24 U.S. Standard gauge) stainless steel sheet with the vertical edges of the box overlapped, not to exeed 7 mm (.28 in) in seam width, and soldered so as to be watertight. A removable extension top extending 8±.5 cm. above the top of the smolder box shall also be provided. The specimen holder during test use shall rest upon a pad of unfaced glass fiberboard or equivalent having dimensions equal to or greater than those of the bottom of the specimen holder. The unfaced glass fiberboard shall be approximately 2.5 cm (1 in) thick with a thermal conductivity of 0.30±0.05 cal(g)/hr cm^2 °C/cm (0.24±0.04 Btu/hr ft^2 °F/in) at 23.9°C (75°F).

(2) Ignition source. The ignition source shall be a cigarette without filter tip made from natural tobacco, 85±2 mm (3.35±.08 in) long with a tobacco packing density of 0.270±0.020 g/cm^3 (16.9±1.25 lb/ft^3) and a total weight of 1.1±0.1 gm (0.039±0.004 oz).

(3) Balance. A balance of 1 kg (2.2 lb) capacity, accurate at least to 0.1 g (0.004 oz), is required.

(4) Test area. The test area shall be draft-protected and equipped with a suitable system for exhausting smoke and/or noxious gases produced by testing. Air velocities as measured by a hot wire anemometer in the vicinity of the surface of the specimen shall not exceed 0.5 m/sec (1.64 ft/sec). The test area shall be at 21±3°C (69.8±5.4°F) and 50±5 percent relative humidity at the time the test begins.

(b) *Test procedure.* (1) Specimens and cigarettes shall be conditioned in air at a temperature of 21±3°C (69.8±5.4°F) and a relative humidity of 50±5 percent to equilibrium prior to test. A change of less than 1% in net weight of the specimen in two consecutive weighings with two hours between each weighing constitutes equilibrium. Cigarettes shall be removed from any packaging and exposed in a suitable manner to permit free movement of air around them during conditioning. Calculate the weight of material necessary to fill the holder (volume 4,000 cm^3 or 0.14 ft^3) at the settled density as determined in § 1209.4(e). The material shall be blown, combed, or otherwise mixed to remove lumps and shall be loaded uniformly into each specimen holder, level and flush to the top of the holder. The weight of each specimen shall be measured to the nearest 0.2 g (0.007 oz) or less by weighing the holder before and after filling. If the weight of the specimen is less than that calculated, a removable extension top shall be placed on top of the holder, the necessary amount of insulation is placed inside the extension and the loaded holder shall be dropped from a height no greater than 7.6 cm. (3 in) onto a hard flat surface. This process shall be repeated until the calculated weight of material completely fills the holder. The extension top is then removed. With the specimen in the holder and placed on the insulated pad, a rod of 8 mm (.31 in) diameter with a pointed end shall be inserted vertically into the approximate center of the material being tested and withdrawn to form an appropriate cavity for the ignition source, such that the cigarette fits snugly and maintains uniform contact with the specimen. A well lit cigarette, burned not more than 8 mm (0.31 in), shall be inserted in the formed cavity, with the lit end upward and flush with the specimen surface. Burning of the cigarette and specimen shall be allowed to proceed undisturbed in the test area for at least 2 hours or until the smoldering is no longer progressing, whichever period is longer.

(2) After completion of burning and after the holder has cooled down to approximately room temperature, the specimen holder with its material residue shall be weighed, at least to the nearest 0.1 g (0.003 oz), and the percent weight loss of the original specimen calculated. The weight of the cigarette residue is ignored in this calculation. (That is, the weight of the cigarette residue is not subtracted from the net weight of the specimen holder's contends at the conclusion of the test.)

(3) Three specimens per sample shall be tested.

§ 1209.8 Procedure for calibration of radiation instrumentation.

This procedure is used to calibrate the radiation instruments used in the test procedures for measuring critical radiant flux.

(a) *Radition pyrometer.* Calibrate the radiation pyrometer by means of a conventional black body enclosure placed within a furnace and maintained at uniform temperatures of 490, 500, and 510°C (914, 932, and 950°F). The black body enclosure may consist of a closed chromel metal cylinder with a small sight hole in one end. Sight the radiation pyrometer upon the opposite end of the cylinder where a thermocouple indicates the black body temperature. Place the thermocouple within a drilled hole and in good thermal contact with the black body. When the black body enclosure has reached the appropriate temperature equilibrium, read the output of the radiation pyrometer. Repeat for each temperature.

(b) *Total heat flux meter.* The total flux meter shall be calibrated by the National Bureau of Standards, (direct request for such calibration services to the: Radiometric Physics Division, 534, National Bureau of Standards (NBS), Washington, DC 20234.), or, alternatively, its calibration shall be developed by transfer calibration methods with an NBS calibrated flux meter. This latter calibration shall make use of the radiant panel tester as the heat source. Measurements shall be made at each of the nine dummy specimen positions and the mean value of these results shall constitute the final calibration.

(c) *Recommendation.* It is recommended that each laboratory maintain a dedicated calibrated reference flux meter against which one or more working flux meters can be compared as needed. The working flux meters should be calibrated according to this procedure at least once per year.

§ 1209.9 Labeling requirement.

(a) Manufacturers, importers, and private labelers of cellulose insulation shall place on all containers of cellulose insulation the following statement:

"This product meets the amended CPSC standard for flame resistance and corrosiveness of cellulose insulation."

To meet this requirement manufacturers, importers, and private labelers may use any type of label, including one which is pressure sensitive or glued on, provided the label is made in such a manner that it will remain attached to the container for the expected time interval between the manufacture of the product and its installation.

(b) This label shall appear prominently and conspicuously on the container in letters which are at least one-fourth inch in height. The labeling statement shall be printed with legible type in a color which contrasts with the background on which the statement is printed.

§ 1209.10 Certification and enforcement.

(a) While this Part 1209 prescribes test methods to determine whether cellulose insulation subject to this interim standard meets its requirements, the

interim standard itself does not require that a manufacturer or private labeler test any cellulose insulation. However, section 14 of the Consumer Product Safety Act (15 U.S.C. 2063) requires manufacturers and private labelers of products subject to safety standards to certify that the product conforms to the standard based on either a test of each product or a reasonable testing program. (Elsewhere in this issue of the Federal Register the Commission has issued a certification rule that prescribes requirements that manufacturers and private labelers shall follow to certify that their cellulose insulation complies with the requirements of the amended standard.)

(b) The Commission intends to use the test procedures set forth in this Part 1209 to determine whether insulation subject to the interim standard meets the requirements of the interim standard.

§ 1209.11 Effective date.

All cellulose insulation that is a consumer product and that is manufactured after October 15, 1979 shall meet the requirements of this standard, including the labeling requirement of § 1209.9.

Dated: July 2, 1979.

Sadye E. Dunn,

Secretary.

BILLING CODE 6355-01-M

[FR Doc. 79-20766 Filed 7-5-79; 8:45 am]

BILLING CODE 6355-01-C

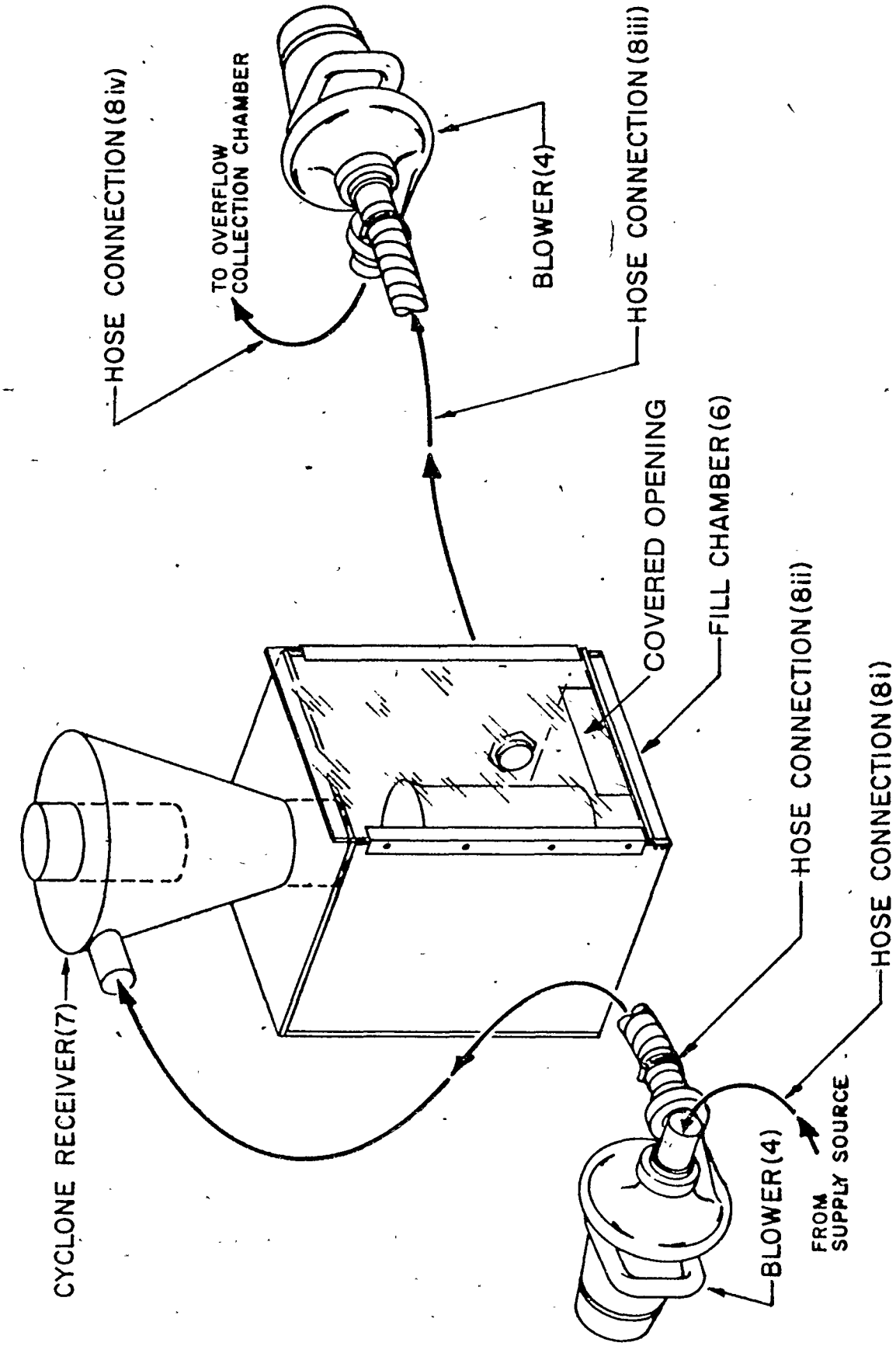

FIG I—PARTIAL INSULATION PREPARATION APPARATUS

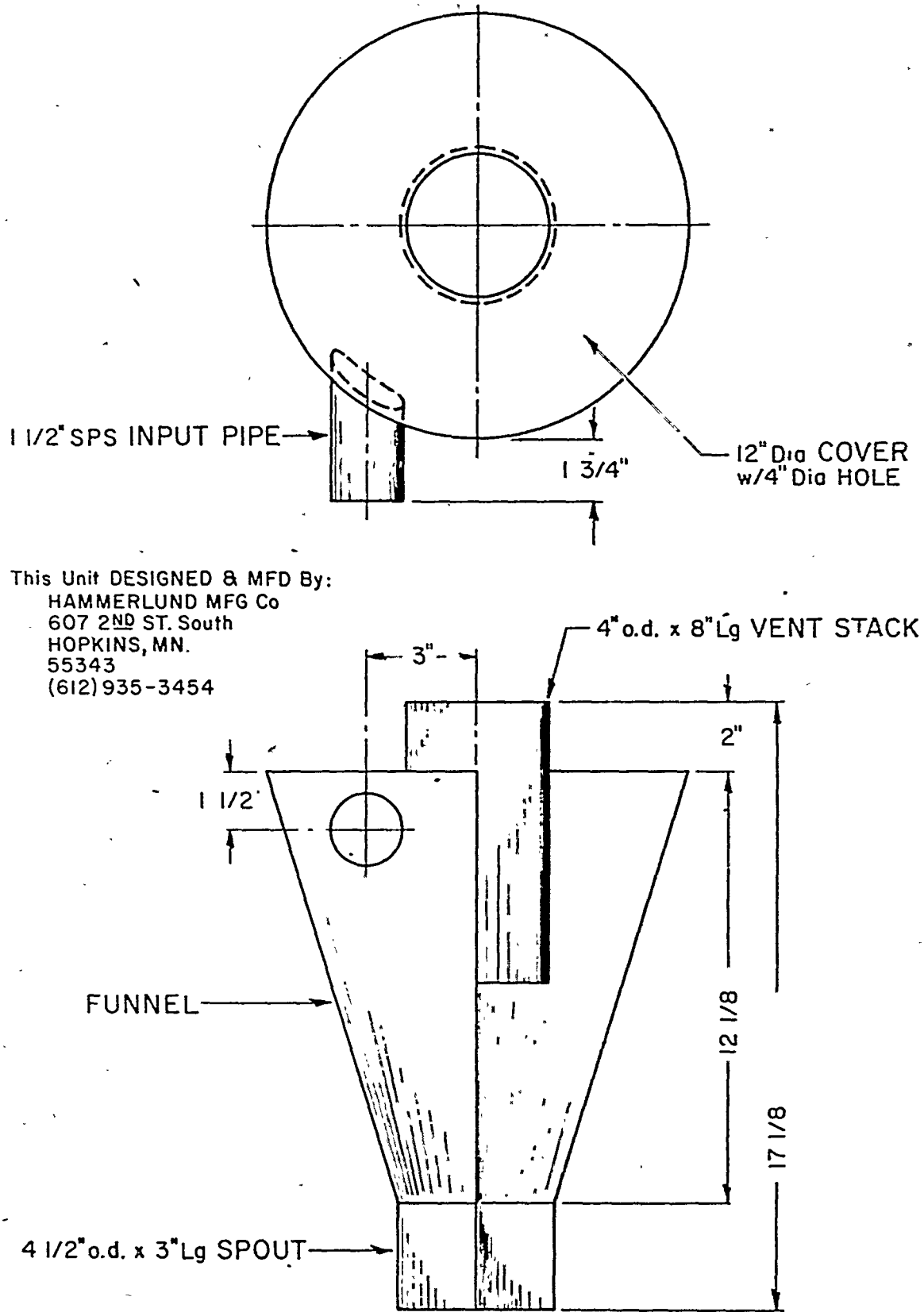

FIG 2—CYCLONE RECEIVER WELDMENT

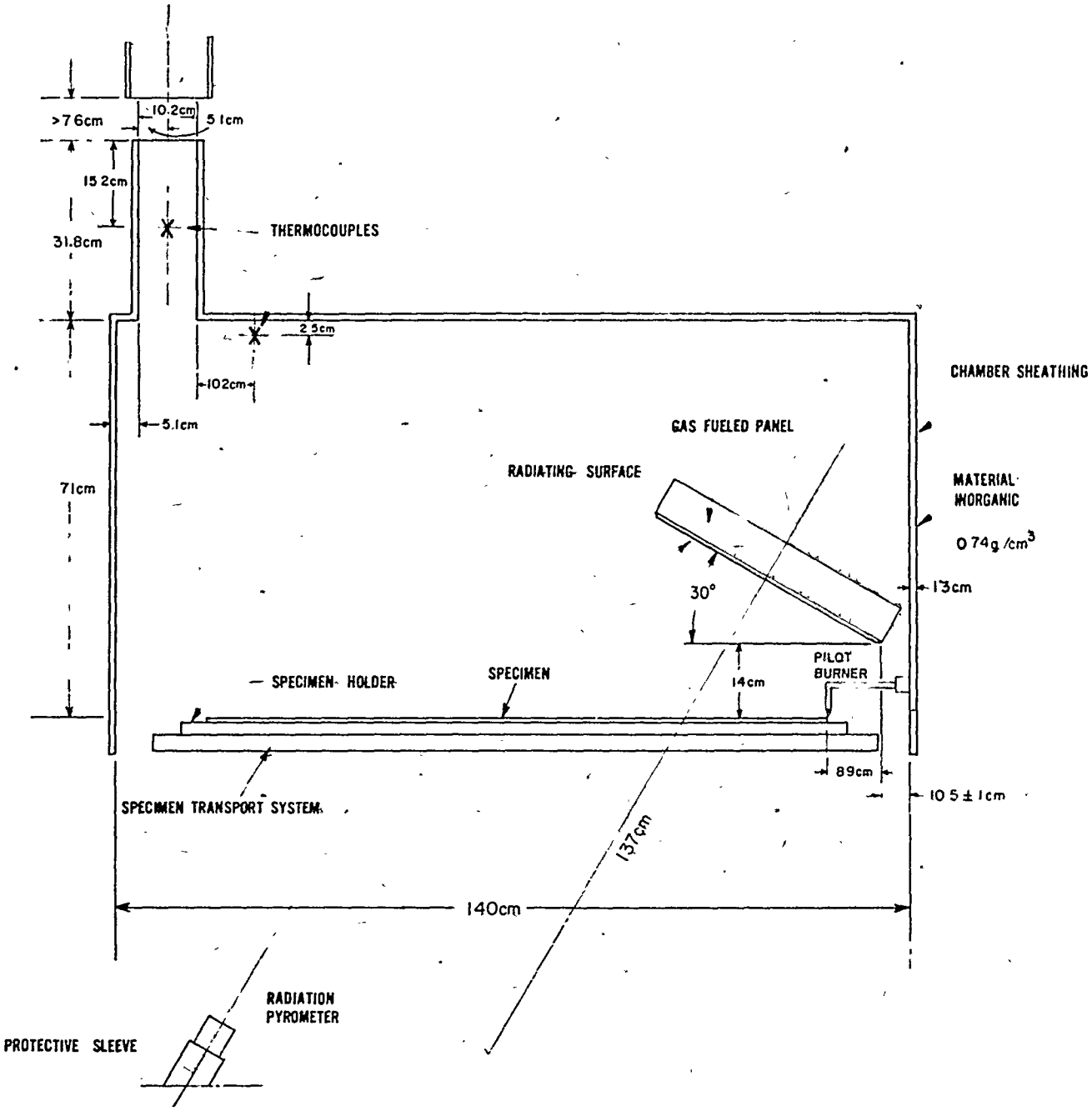

FIG 3 — FLOORING RADIANT TESTER SCHEMATIC

SIDE ELEVATION

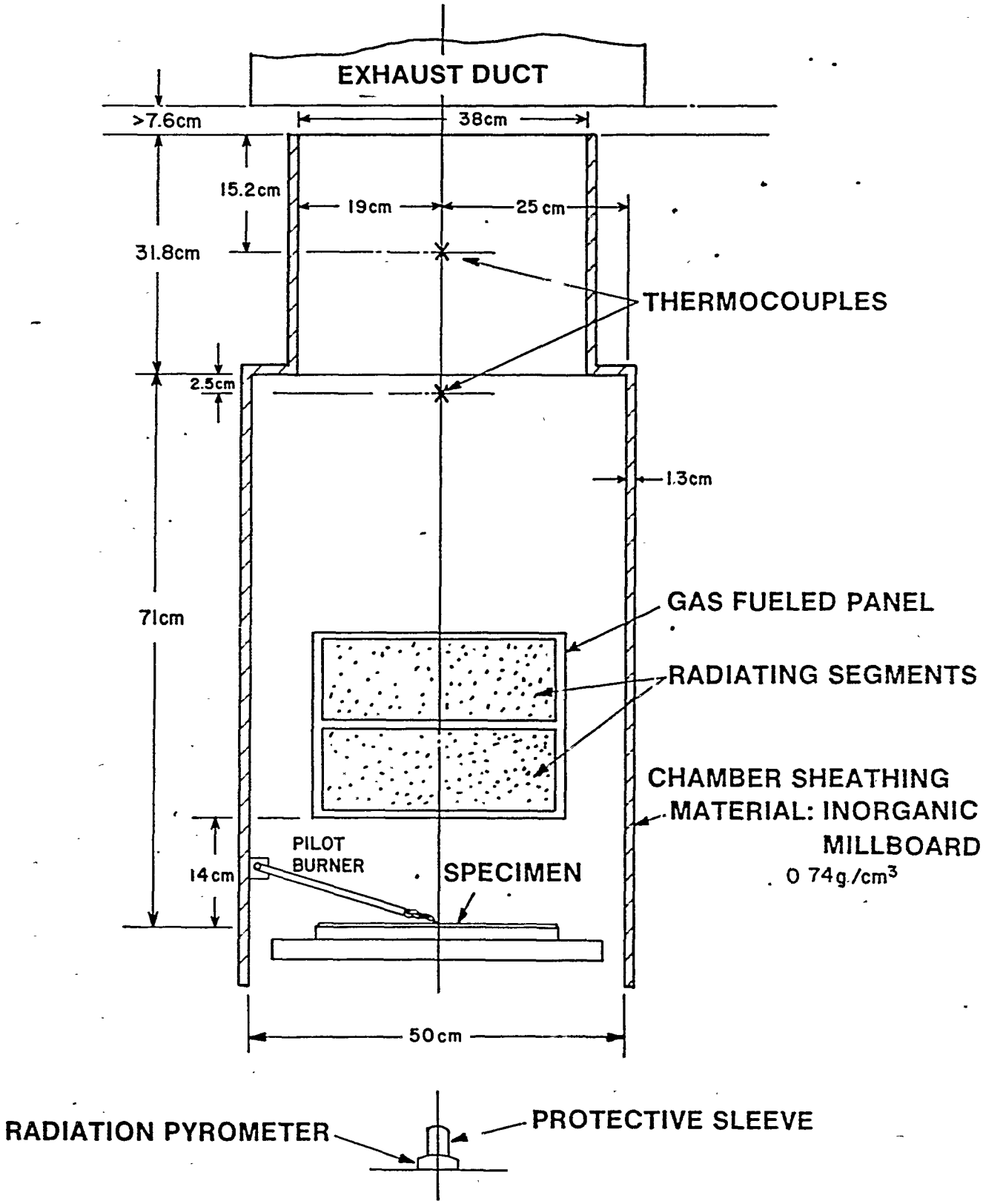

FIG 4 — **FLOORING RADIANT PANEL TESTER SCHEMATIC LOW FLUX END, ELEVATION**

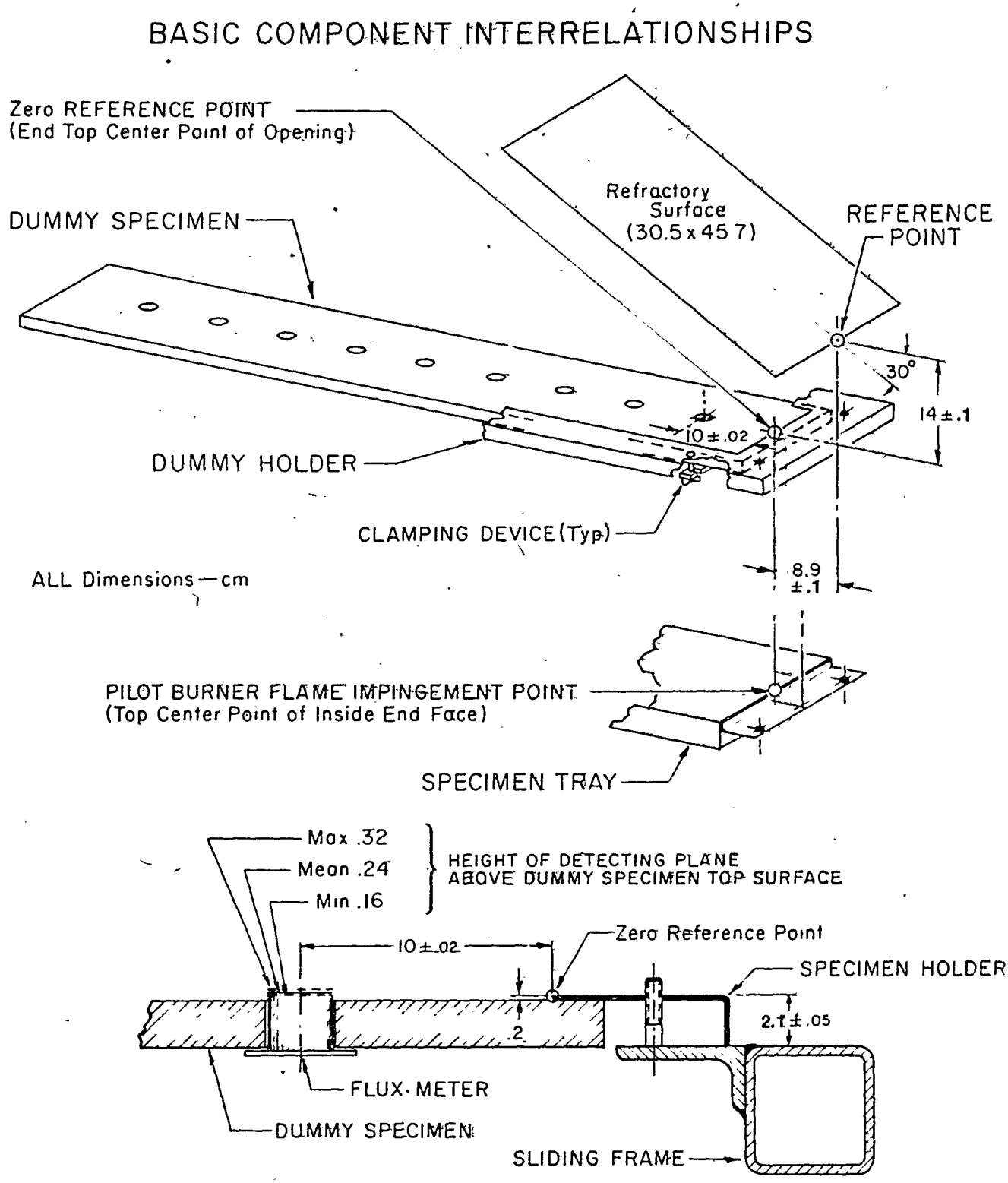

FIG 5 — **ZERO REFERENCE POINT RELATED TO DETECTING PLANE**

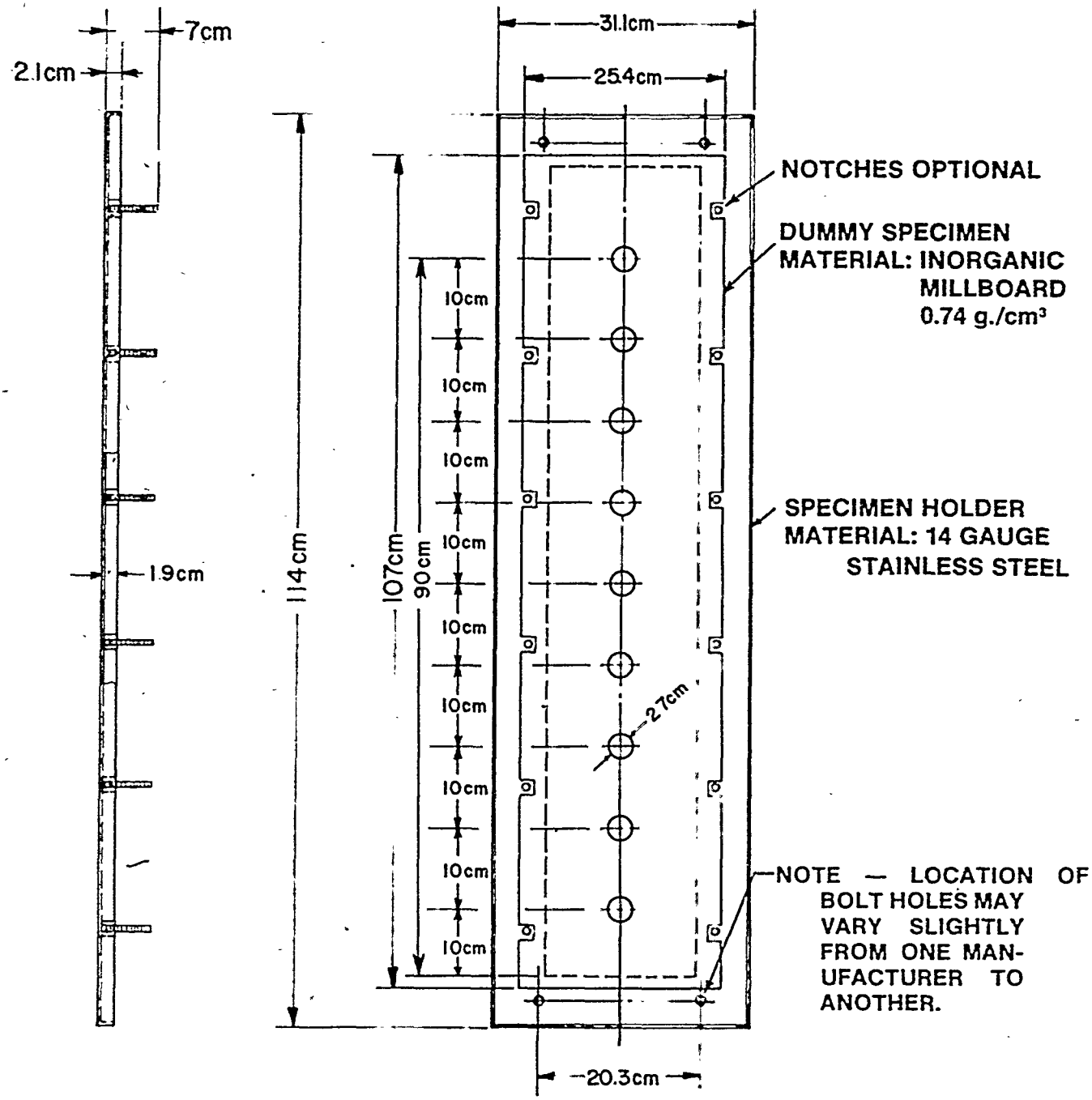

FIG 6 — **DUMMY SPECIMEN IN SPECIMEN HOLDER**

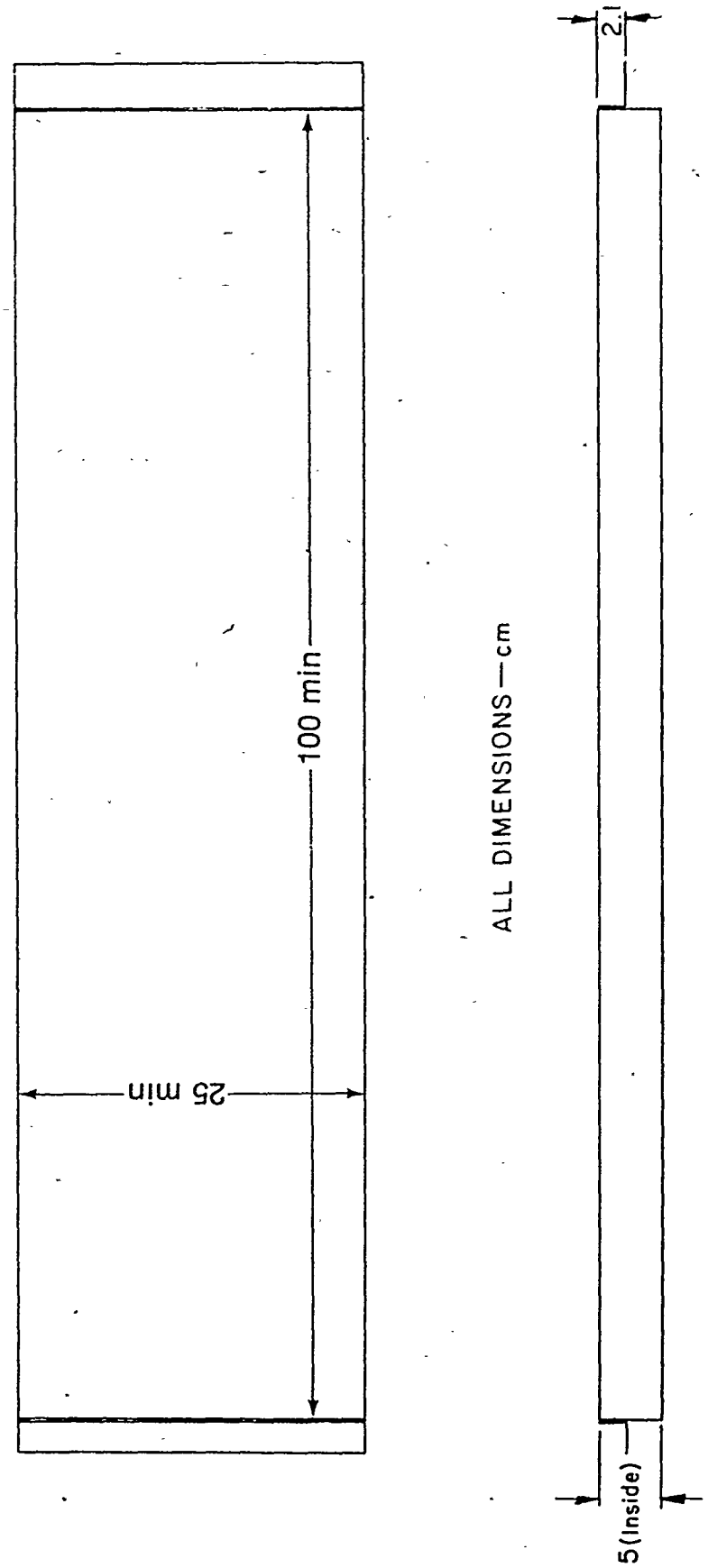

FIG 7 — SPECIMEN TRAY

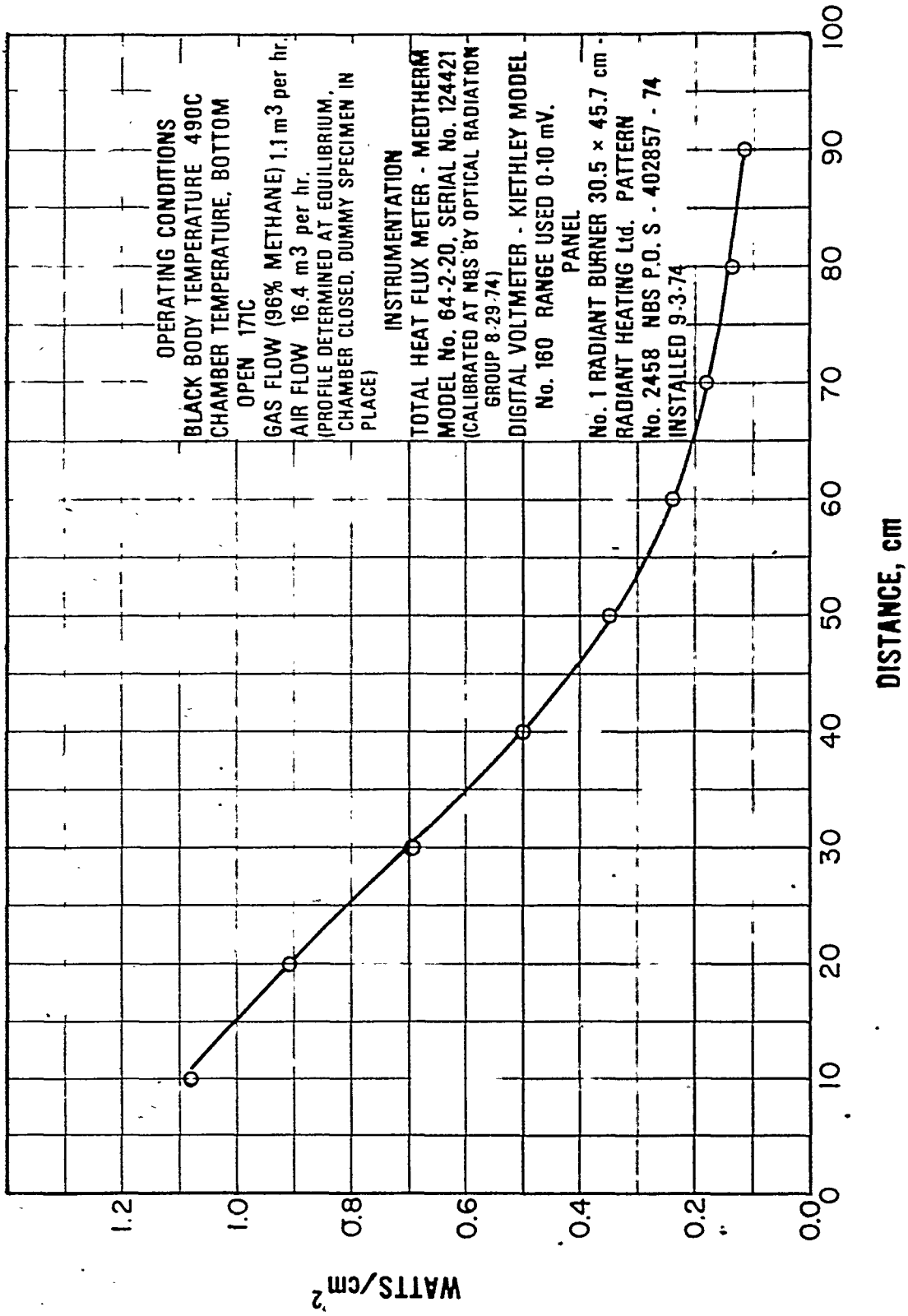

FIG 8 — STANDARD RADIANT HEAT ENERGY FLUX PROFILE

RADIANT FLUX PROFILE

Date _____

Black Body Temperature _____ m.v. _____ °C (°F)

Gas Flow _____ $NTPm^3H$ (SCFH) Air Flow _____ $NTPm^3H$ (SCFH)

Room Temperature _____ °C (°F)

Air Pressure _____ Gas _____ cm (in) of H_2O

Flux Meter _____ Conversion Factor _____

Radiometer No. _____ from Calibration on _____

Distance (cm)	MV	Watts/cm^2
10	_____	_____
20	_____	_____
30	_____	_____
40	_____	_____
50	_____	_____
60	_____	_____
70	_____	_____
80	_____	_____
90	_____	_____

Signed _____

FIG. 9 Flux Profile Data Log Format

Test Number _____ Date _____ Time _____

Laboratory _____

Specimen Identification/Code No. _____

Test Assembly: _____

Panel: Temperature _____ °C (°F)

Flow: Gas _____ $NTPm^3H$ (SCFH) Air _____ $NTPm^3H$

Pressure, cm (in) H_2O: Initial, Air _____ Gas _____

Chamber Temperature (Initial) _____ °C (°F)

Room: Temperature _____ °C (°F) Hood Draft _____ cm (in) water

Total Burn Length _____ cm (in)

Critical Radiant Flux watts/cm^2 _____

Flux Profile Reference _____

Observations:

Signed _____

FIG. 10 - Insulation Radiant Panel Test Data Log Format

16 CFR Part 1209

Interim Safety Standard for Cellulose Insulation

AGENCY: Consumer Product Safety Commission.

ACTION: Final rule.

SUMMARY: The Commission issues a final rule that manufacturers, private labelers, and importers must follow to certify that their products comply with the Commission's amended Interim Standard for Cellulose Insulation. The rule contains requirements for conducting a reasonable testing program, for recordkeeping, and for certifying compliance with the amended Interim Standard. The requirements will assist manufacturers, private labelers, and importers in complying with the amended Interim Standard and will also help the Commission monitor compliance with that standard.

EFFECTIVE DATE: The certification rule applies to cellulose insulation manufactured after October 15, 1979.

FOR FURTHER INFORMATION CONTACT: Allen Brauninger, Directorate for Compliance and Enforcement, Consumer Product Safety Commission, Washington, D.C. 20207, 301-492-6629.

SUPPLEMENTARY INFORMATION

Background

In the Federal Register of March 8, 1979 (44 FR 12872), the Commission proposed for public comment an amendment of the Interim Standard for Cellulose Insulation (16 CFR Part 1209). (The interim standard itself, which is intended to address the flame resistance and corrosiveness of cellulose insulation, was published on August 8, 1978 (43 FR 35240)). The amendment proposed on March 8, 1979 incorporates, with changes made by the Commission, the requirements for settled density, smoldering combustion, critical radiant flux, and corrosiveness contained in the purchasing specification for cellulose insulation of the General Services Administration issued on June 15, 1978 and designated GSA Specification HH-I-515D. This amendment will change the test procedures the Commission uses to determine if cellulose insulation distributed for sale to or use by consumers is acceptable for flame resistance and corrosiveness. Elsewhere in this issue of the Federal Register the Commission issues the amendment in final form.

In the March 8, 1979 Federal Register the Commission also proposed for public comment a regulation (16 CFR Part 1209, Subpart B, 44 FR 12864) setting forth the procedures manufacturers, private labelers, and importers of cellulose insulation must follow in certifying that their products comply with the proposed amendment. The proposed certification rule contains requirements for a reasonable testing program, recordkeeping, and labeling. The Commission is issuing the certification rule in final form in this document. The Commission is issuing the certification requirements at the same time as it issues a revised standard so that parties subject to the standard will have detailed guidance concerning how to comply with the standard.

Requirements of Consumer Product Safety Act

The Consumer Product Safety Act (CPSA) imposes two basic obligations on manufacturers, importers, and private labelers of cellulose insulation. The first is to produce and sell a product which will meet all requirements of the final amended standard when tested by the Commission. The manufacture for sale, offer for sale, distribution in commerce, or importation into the United States of any cellulose insulation which does not comply with the standard violates section 19(a)(1) of the CPSA. Section 22 of the CPSA authorizes the Commission to enjoin any person from violating section 19, and to seize any product which does not comply with an applicable standard. Additionally, sections 20 and 21 of the CPSA authorize the Commission to seek civil or criminal penalties for violation of the CPSA in appropriate cases.

The second basic obligation the CPSA imposes is that all manufactures, importers, and private labelers of cellulose insulation must certify that their products comply with the standard; they must base that certificate of compliance on a test of each product or reasonable testing program. Section 14(a) of the CPSA establishes the certification requirements. The failure to issue a certificate of compliance, or the issuance of a certificate which is false or misleading in any material respect violates section 19(a)(6) of the CPSA.

The regulation issued below prescribes the form and content of the certificate of compliance with the standard for cellulose insulation as well as general requirements concerning recordkeeping and a reasonable testing program to serve as the basis for issuing the certificate of compliance.

The Commission notes that the obligation to issue a certificate of compliance based on a reasonable testing program is in addition to, and not in place of, the obligation to manufacture, import, distribute, or private label only cellulose insulation which meets the requirements of the standard.

Consequently, if the Commission tests insulation in accordance with the standard and obtains failing results, the Commission may begin enforcement action for violation of section 19(a)(1) of the CPSA, even though the manufacturer, importer or private labeler of that product may have issued a certificate of compliance and may have based that certificate on a reasonable testing program which meets the requirements of the regulation issued below. Additionally, failing results from any test of insulation the Commission conducts in accordance with the provisions of the standard, will constitute some evidence that the certificate of compliance was false or misleading.

The Proposed Certification Rule

The Commission proposed the certification requirements for cellulose insulation pursuant to section 14 of the Consumer Product Safety Act (CPSA) (15 U.S.C. 2063). Subsection (b) of that section gives the Commission the authority to issue regulations to prescribe a reasonable testing program which must be used to support certification of compliance with any consumer product safety standard. (Section 14(a) requires each manufacturer, importer, or private labeler of a product which is subject to a consumer product safety standard to issue a certificate of compliance with the applicable standard and to base that certificate upon a test of each item or upon a reasonable testing program.)

The proposed certification rule requires manufacturers, private labelers, and importers to: (1) implement their own reasonable testing programs within certain broad outlines, (2) issue certificates of compliance for cellulose insulation in the form of labels or separate certificates which state that the insulation complies with the standard and supply other specified information, and (3) keep records which demonstrate that the certificates are based on a reasonable testing program.

Since it is not practical to test each batch of insulation subject to the standard, the proposed certification rule requires the use of a reasonable testing program to support certification of compliance. The proposed testing

program permits manufacturers, private labelers, and importers to determine the types and frequency of testing for their own programs. The Commission decided not to specify these elements because, as is stated in the proposal, a uniform, mandatory program would not be suitable for all cellulose insulation manufacturers. The Commission pointed out that manufacturers' operations differ in size, profitability, and quality control procedures.

However, the proposed rule (and the final rule issued below) does require that all reasonable testing programs conform to certain broad outlines. The Commission explained in the preamble to the proposed rule that this is because current cellulose insulation production, even with the best state-of-the-art in manufacturing, is sufficiently variable to warrant periodic testing to demonstrate that the product complies with the amended standard.

Therefore, proposed § 1209.33(b) requires all reasonable testing programs to consist of four parts:

1. Qualification tests which must be performed on samples of the manufacturer's cellulose insulation to demonstrate that the product is capable of passing the tests prescribed by the amended standard.

2. A written description of the raw materials, production equipment, and manufacturing process used to produce the cellulose insulation which passed the qualification testing. This description is known as the "product specification."

3. Production tests performed at appropriate intervals on the insulation as it is manufactured to demonstrate that the product being manufactured is substantially similar to the product which passed the qualification tests and to demonstrate that the product being manufactured meets the requirements of the amended standard.

4. Corrective action, which must be taken whenever samples of the cellulose insulation yield unacceptable or failing test results.

Each of these four elements of the reasonable testing program is discussed in detail in the Commission's proposal document.

Proposed § 1209.38 requires manufacturers, private labelers, and importers subject to the standard to maintain written records which are required to be made available to any designated officer or employee of the Commission upon request. The required records include a record of each product specification (which includes a description of results from qualification tests) records concerning the types and frequency of production tests conducted, records of all corrective actions, and records indicating which insulation material is covered by each certificate of compliance issued. In the proposal the Commission noted that the primary purpose of these records is to enable manufacturers, private labelers, and importers to demonstrate that they are conducting a reasonable testing program in certifying their products.

The final sections of the proposed certification rule describe the form of the certificate of compliance for cellulose insulation. Manufacturers of insulation subject to the standard which is sold in bags or containers are required to certify compliance with a label on each bag or container. (Section 14(c) of the CPSA authorizes the Commission to issue rules requiring a product to bear a label containing certain information.) The certification label is required to include specified information which is discussed below in the analysis of comments as well as in the March 8, 1979 preamble. In those few instances where cellulose insulation is not sold in containers, the proposed rule states that the certificate of compliance must, of necessity be in the form of a document which is separate from the product. The proposed rule also provides that where a private labeler distributes a product subject to the standard under the private labeler's name or where an importer distributes such a product, the private labeler or importer must issue the certificate of compliance as well as assume responsibility for the integrity of the manufacturer's records and for ensuring that all testing used to support the certificate (even though performed by the manufacturer) has been properly conducted with acceptable results. In the case of an importer, the importer may rely on the foreign manufacturer's certification testing only if the records of the tests are maintained in the United States and the importer is a resident or maintains a resident agent in this country.

The Commission decided that certification for cellulose insulation, where feasible, should be in the form of a label rather than a separate certificate for the reasons which are stated in the preamble of the proposed rule. Primarily, the Commission noted that unlike separate certificates, a label would be visible to all in the distribution chain, including consumers. If any questions arose concerning whether particular bags of insulation complied with the amended standard, the certification would not have to be retrieved but would be immediately available.

The Commission reviewed the economic impact of the proposed rule in the proposal and stated that the costs of the rule would not be burdensome. The Commission noted that while the rule mandates a specified label for cellulose insulation, the label is the same as the one required by the amendment. In addition, the rule leaves manufacturers with a great deal of flexibility as to testing and recordkeeping, thus allowing them substantial control over their own costs. In light of the need for the rule, the Commission concluded that the proposed requirements were reasonable.

Comments on the Proposal

The Commission received twenty-five comments on issues relating to the proposed certification rule. Commenters included cellulose insulation manufacturers, testing laboratories, associations of testing laboratories, chemical manufacturers, a federal agency, an association of cellulose insulation manufacturers, and an association of building officials. The principal issues raised by the comments and the Commission's responses are discussed below.

1. *Applicability of the Certification Rule.* Proposed § 1209.31(b)(1) states that cellulose insulation subject to the standard (and the certification rule) includes all insulation produced or distributed for sale to, or for the personal use, consumption, or enjoyment of consumers in or around a permanent or temporary household or residence, a school, in recreation or otherwise.

One commentor noted that it is unclear whether the proposed rule is intended to apply to the application of cellulose insulation in commercial, industrial and agricultural buildings. The commenter stated that the rule should not include these applications and should be limited to insulation applied to residential structures. The same commenter noted that it is also unclear whether the rule applies to "spray-on" cellulose material which contains an adhesive. The commenter suggested that to the extent "spray-on" cellulose insulation is to be applied to residential structures, it should be covered by the standard and certification rule.

In response to this comment, the Commission points out that the standard and certification rule do not apply to the application of insulation, but only to the insulation itself. The standard and certification rule include that cellulose insulation which meets the definition of "consumer product" in section 3 of the CPSA (15 U.S.C. 2051).

The Commission has decided not to limit the applicability of the standard and certification rule to cellulose insulation which is intended only for residential use. The Commission points out that Congress intended that the safety standard and certification rule cover all cellulose insulation manufactured for use as a consumer product. (See the Emergency Interim Consumer Product Safety Standard Act of 1978, Pub. L. 95–319, 92 Stat. 386, July 11, 1978.)

Therefore, the cellulose insulation which is covered by this rule is that insulation which is produced or distributed for the personal use, consumption, or enjoyment of consumers in or around a permanent or temporary household or residence, a school, in recreation, or otherwise. As a practical matter, the Commission notes that chemical formulations for cellulose insulation vary depending on the kind of roof on a building, not on how a building is used. Therefore, while there are difference formulations for cellulose insulation, the insulation material used in a building does not depend on whether the building is a residence. The Commission believes it would not be pratical to limit the standard and certification rule to residential applications since the same type of insulation has both residential and non-residential uses.

The Commission notes that "spray-on" cellulose insulation, which is installed using a spray-on process with wet or dry adhesive, is included within the definition of cellulose insulation in the amendment to the interim standard. Therefore, such cellulose insulation is also covered by this final certification rule.

It should also be noted that the final amendment includes cellulose insulation installed using the "wet process" method of installation, as did the proposal. (The "wet process" insulation is blown into an area with a spray or mist of water applied at the nozzle during installation.) Thus, this final certification rule covers such insulation also.

2. *Reasonable Testing Program.* (a) *Testing to support certification.* Three commenters indicated their support for the design of the proposed testing program. One commenter commended CPSC for recognizing the nature of the cellulose insulation manufacturing process and the product characteristics and for consequently, allowing manufacturers to develop and maintain their own testing programs to meet their responsibilities and needs.

Several commenters, however, urged the Commission to revise the proposed regulation to require insulation manufacturers to participate in third-party certification programs. One commenter noted that those manufacturers who do use an independent testing laboratory for certifying, testing, and follow-up would be at a significant cost disadvantage over manufacturers who do their own testing. Another commenter noted that under the proposal, manufacturers are free to select a test procedure they are capable of passing. Several commenters suggested that mandatory third-party testing is essential to protect consumers from nonconforming and unsafe insulation on the theory that testing and certification by manufacturers themselves presents a greater potential for abuse than outside testing and certification. One commenter suggested that CPSC should have issued, instead of a proposal allowing manufacturers to design and implement their own testing programs within certain parameters, an effective set of guidelines for use by private organizations carrying out testing programs on cellulose insulation. The commenter noted that such an effective set of guidelines at a minimum should include random, unannounced testing and examination of insulation at a frequency based on the amount of material produced, periodic independent follow-up testing, and a meaningful procedure in case of failure with controls on compliance statements and related markings.

The Commission declines to revise the proposed certification rule to provide for mandatory third-party testing by commercial laboratories. The Commission does not possess information to demonstrate that insulation which is certified by a third party is more likely to comply with the amended standard than insulation which is certified by the manufacturer on the basis of in-house testing. During the process of enforcing the existing standard, the Commission sampled and tested insulation manufactured by more than 200 firms. Several of these firms participated in third-party certification programs, many others based their certification of compliance entirely on in-house testing. Preliminary examination of the test results obtained by the Commission does not clearly establish that insulation manufactured by firms participating in commercial certification programs is more likely to comply with the standard than insulation manufactured by firms which do their own testing. Therefore, the Commission concludes that mandatory third-party testing is not essential for consumer safety.

In addition, as noted in the preamble to the proposed rule, the Commission believes that mandatory third-party testing could be unfair to those firms, large or small, who might be able to perform reasonable testing at a lower cost than the fees imposed by an outside testing laboratory.

The preamble of the proposed rule also stated that the Commission decided against the proposal of a requirement for third-party certification in part because such a requirement might necessitate issuance by the Commission of regulations determining exactly what type of firms and organizations would be eligible to perform the required sampling and testing.

One commenter noted that the Commission would not have to issue such regulations because the Commission could require testing to be performed by laboratories which have been qualified to perform the testing in the amended standard by the national Voluntary Laboratory Accreditation Program (NVLAP), administered by the Departmenf of Commerce.

The Commission is aware that NVLAP has announced that once the Commission issues its amendment on a final basis, CPSC may request that NVLAP establish approval criteria for laboratories qualified to conduct the testing in the Commission's standard. (NVLAP currently only has criteria for qualification of laboratories to perform the tests in GSA Specification HH–I–515D.) However, despite the possibility that NVLAP may in the future list laboratories qualified to conduct the tests in the amended standard, the Commission continues to believe that mandatory third party testing is not necessary. Commission experience has shown that insulation tested and certified by manufacturers themselves is just as likely to comply as that tested and certified by third parties.

While the final rule does not provide for mandatory third party testing, it does state at § 1209.33(d) that any or all of the testing for a reasonable testing program may, at the manufacturer's discretion, be performed by a commercial testing laboratory. The Commission is aware that some manufacturers might find it helpful to have information on what laboratories are qualified to perform the tests in the amended standard. The Commission intends, therefore, to carefully consider whether to request that NVLAP establish approval criteria for laboratories qualified to conduct this testing.

One commenter objected, because of their vagueness, to the use of words like "appropriate", "reasonable," "periodically," and so forth in the description of the proposed reasonable testing program. The commenter suggested that production testing frequency should be based on production tonnage and that one test for flame resistance should be required for every 10 tons produced or every three hours of production time, whichever occurs first. The commenter also stated that one corrosion test should be required on representative samples from each day's production.

The Commission stated in the proposal that it was not specifying the types or frequency of testing for certification because uniform testing requirements would not be suitable for all cellulose insulation manufacturers whose operations differ in size, profitability, and quality control procedures. The Commission continues to believe that manufacturers should be permitted to determine, based on their own needs and manufacturing processes, the types and frequency of certification testing. The use of words like "appropriate" or "reasonable" in the description of the required testing program is necessary to provide flexibility for manufacturers while at the same time to indicate that testing programs which, for example, use tests which do not even simulate the tests in the standard may violate the testing program requirements. Because the Commission believes that the commenter's suggested testing frequency may not be suitable for all manufacturers, the Commission has not modified the proposed testing program in this regard in the final rule.

One comment from a manufacturer of cellulose insulation objected that the proposed regulation would allow manufacturers to devise testing programs which they believe will consistently pass their products, rather than testing programs which are capable of assuring that their product will consistently meet the requirements of the standard.

The Commission observes that proposed § 1209.33(b) defined a "reasonable testing program" as one which "demonstrates that the insulation complies with the standard." While the proposal did not require manufacturers and other parties subject to its provisions to use specified tests in devising reasonable testing programs, the proposal did state that any tests used must be "reasonable tests."

In response to this comment, the Commission has decided to clarify § 1209.33(b) of the regulation issued below by adding language to state that a reasonable testing program cannot consist of tests which the party responsible for issuing the certificate of compliance either knows, or should know through the exercise of reasonable dilligence, will pass or accept insulation which will yield failing results when tested in accordance with the standard. The language of § 1209.33(b) has also been revised to state that a reasonable testing program is one which demonstrates with "reasonable certainty" that insulation certified to comply with the standard will meet all requirements of the standard. It should also be noted that the language in proposed § 1209.33(c) which allows the use of tests other than those prescribed by the standard in a reasonable testing program has been moved to § 1209.33(b) of the regulation issued below. The Commission believes that this modification will improve the organization of the certification regulation.

(b) *Product specification.* Proposed § 1209.35(a) requires that before any manufacturer, private labeler, or importer distributes in commerce cellulose insulation subject to the standard, it shall ensure that the insulation is described in a written product specification. Proposed § 1209.38 requires that a record of each product specification be maintained so that it may be made available to any designated officer or employee of the Commission upon request.

Proposed § 1209.35(b) lists the information that each product specification must contain. The product specification is required, among other things, to include "the formulation of the fire-retardant chemicals added, including their chemical constituents and their form (for example, granulated or powdered) * * *" (§ 1209.35(b)(3).)

Two commenters stated that some manufacturers use premixed chemicals which are supplied in a liquid form. The commenters suggested that the language of § 1209.35(b)(3) be revised to reflect this fact. The Commission agrees with this suggestion. The Commission has, therefore, revised § 1209.35(b)(3) in the final version of the rule so that it now reads "* * * including their chemical constituents and their form (for example, granulated, powdered, or liquid) * * *"

Two other commenters objected to the content of proposed § 1209.35(b)(3) because it would require a manufacturer using a pre-mixed fire retardant to disclose the chemical formula of the pre-mix, when this formula is generally a trade secret known only to the manufacturer of the product. For this reason, these commenters urged revision of proposed § 1209.35(b)(3) to allow insulation manufacturers using a pre-mixed fire-retardant to describe the fire-retardant simply by the name of the supplier and the brand or trade name of the product.

The Commission agrees with the point raised by these commenters. Therefore, the Commission has added a sentence to § 1209.35(b)(3) below, which provides that in those instances where the chemical composition or formula of a pre-mixed fire-retardant is not known to the insulation manufacturer, the manufacturer may describe the pre-mixed fire-retardant by the name and address of the supplier and its brand or trade name.

In addition to the formulation of fire-retardant chemicals added, the proposed rule requires the product specification to include a description of the equipment used to manufacture the insulation (proposed § 1209.35(b)(1)) and a description of the cellulosic stock material used (proposed § 1209.35(b)(2)). Several commenters stated that much of the information required to be included in the product specification is proprietary and should not be required to be disclosed. Certain of these commenters appeared to be willing to have their product specifications examined onsite by Commission inspectors, but did not want to sent copies to CPSC.

The Commission is aware that trade secrets and other confidential information it possesses may not be disclosed to the public, as provided in section 6(a)(2) of the CPSA (15 U.S.C. 2055(a)(2)). The Commission has, in fact, issued regulations under the Freedom of Information Act (15 U.S.C. 552) (16 CFR Part 1015, February 22, 1977) which establish procedures by which a firm may assert that information the Commission requires it to furnish is exempt from disclosure. As the regulations state, Commission procedure is that material sent to the Commission for which confidential handling is requested is marked "restricted" and is not placed in a public file. If the Commission then receives a specific request for disclosure of the material, the Commission decides, based on the most authoritative judicial interpretations available at the time, whether the material is entitled to be withheld under the Freedom of Information Act. The firm submitting the material is notified of the Commission's final decision which is appealable in the courts.

In response to the concerns of these commenters, the Commission has added a new subsection (c) to § 1209.38 on "Records" dealing with confidentiality of records, including confidentiality of product specification records. The new subsection references section 6(a)(2) of the CPSA, the Freedom of Information Act, and the Commission's regulations under that act and explains that requests for confidentiality of records will be handled in accordance with the Commission's regulations.

It should also be noted that, as a general rule, manufacturers' records will be examined by Commission inspectors at the manufacturing facility; and manufacturers will not usually be asked to send their records to CPSC.

One commenter noted that the information required to be listed in the product specification is not the information most likely to detect differences in the ability of the insulation to meet the requirements of the standard. The commenter stated that the factors which would be relevant (i.e., screen size, hammer clearance, length and configuration of ductwork, and so forth) would probably not be meaningful to a Commission inspector who is a generalist rather than a specialist in the field of cellulose insulation. For this reason, the commenter recommended elimination of the requirements of the proposed rule relating to the product specification so that the requirements of the rule would be addressed exclusively to testing insulation for compliance with the standard.

The Commission declines to eliminate or to change in the manner suggested the requirements in the rule relating to the product specification. While the Commission recognizes that the factors listed by the commenter may be relevant to the ability of insulation to meet the standard, the Commission does not have technical information indicating how these factors might affect the end product. The Commission believes, however, that a description of the equipment used to manufacture the insulation, a description of the cellulosic stock material used, the formulation of fire-retardant chemicals added, and a description of the types and results of qualification tests will be useful as an identification of the elements used in producing a particular product. This kind of information will assist Commission staff in monitoring compliance with the standard as well as the testing requirements in the certification rule. The information will enable Commission staff to determine whether a manufacturer is producing a product according to the product specification. Further, if a manufacturer has been producing a complying product for a period of time and then begins to produce a noncomplying product, the product specification may enable Commission staff to identify what element of the manufacturing process (i.e., the cellulosic stock material, the equipment, and so forth) may be contributing to the noncompliance. The Commission points out that manufacturers, of course, are free to include in the product specification any additional information they believe is appropriate.

(c) *Corrective action.* The final element of the proposed reasonable testing program consists of corrective action which must be taken whenever samples of the cellulose insulation yield failing test results. Proposed § 1209.37(a) provides that when any production test yields failing results, corrective action must be taken. Corrective action includes changes to the manufacturing process as well as reworking the insulation product itself and may consist of equipment adjustment or repair, change in chemical formulation, chemical quantity, or cellulosic stock, or any other action deemed appropriate to achieve passing test results. Proposed § 1209.35(d) provides that whenever a manufacturer, private labeler, or importer makes a change to the equipment, the cellulosic stock material, or the chemical formulation or any other factor which is likely to affect the ability of the insulation to meet the standard, that change results in a new product, requiring the preparation of a new product specification. The new product must be subjected to qualification tests and must yield passing results.

Two commenters objected to these provisions, stating that the proposed rule locks manufacturers into their existing equipment because when a manufacturer changes his equipment, he must requalify his product. The commenters stated that manufacturers will be reluctant to upgrade their equipment and manufacturing process.

The Commission believes that these commenters have misunderstood the intent of proposed §§ 1209.37(a) and 1209.35td). Proposed § 1209.35(d) states that only those changes to the equipment or the product formulation which are likely to affect the ability of the insulation to meet the standard such as changes in chemical formulation, equipment design, or cellulosic stock material used result in a new product triggering requalification. Equipment modifications which do not relate to the ability of insulation to comply with the standard such as replacing worn screens or blown-out motors require no retesting of the end product. Therefore, the Commission does not believe that the proposed rule inhibits manufacturing improvements and has not changed the rule in response to these comments.

3. *Recordkeeping Requirements.* Proposed § 1209.38 requires manufacturers, importers, and private labelers of cellulose insulation subject to the standard to maintain specified records which are required to be made available to any designated officer or employee of the Commission upon request. The required records include a record of each product specification (which includes a description of and results from qualification tests), records demonstrating compliance with the production testing requirements, records of all corrective actions taken, and records indicating which insulation material is covered by each certificate of compliance issued.

In addition to the comments discussed above concerning confidentiality of records, two commenters addressed these recordkeeping provisions. One commenter expressed support for the provisions, noting that the information required to be maintained could be incorporated into manufacturers' existing recordkeeping systems with a minimum burden. The other commenter stated that required records should include statements concerning the disposition of material that does not comply.

The Commission does not believe it is necessary for the records to state the disposition of noncomplying insulation. Cellulose insulation that does not comply with the standard cannot be sold or offered for sale as cellulose insulation. Manufacturers should determine, based on their own needs, whether to recycle noncomplying insulation until an acceptable product is achieved, to sell the noncomplying material for a use other than cellulose insulation, or to simply dispose of the noncomplying material.

4. *Certificate of Compliance.* a. *Form of certificate.* Proposed § 1209.39(a)(1) requires that the certificate of compliance for cellulose insulation which is sold in bags or other containers must be in the form of a label on each container. (This label may be the same label that is required by the amended interim standard.) Proposed § 1209.39(a)(2) requires that the certificate of compliance for insulation which is not sold in containers must be in the form of a separate certificate.

One firm suggested that instead of a label on the packaging of insulation, a product identification be required for

certification purposes. The firm explained that it uses "microtaggants" (coded particles which can be retrieved from the product and de-coded with a microscope and magnet) to identify its insulation.

The Commission points out that one of the purposes of the certification label is to enable consumers to identify complying insulation. "Microtaggants" obviously would not serve this function. In addition, the Commission believes that the form of the certificate of compliance should be uniform among manufacturers. Many smaller insulation manufacturers may not be able to afford to use such coded particles and may prefer to label their containers. For these reasons, the Commission has not changed the proposed rule to require or to allow the use of coded particles for certification purposes.

Another commenter noted that proposed § 1209.39(a)(1) states that the information required by the label "shall be permanent and conspicuous on the bag or container * * *" while the preamble of the proposed amended standard states that manufacturers may use any type of label, including a glued-on label. The commenter suggested that these statements appear to be in conflict.

The Commission acknowledges that since "permanent" was not defined in the proposed certification rule, some confusion may have resulted. The "permanent" language in proposed § 1209.39(a)(1) means that the certification label must be permanent until the bag or container is opened and used. A glued-on label would satisfy this sense of "permanency." The final version of the rule below includes an explanation of "permanent."

In the preamble to the proposed rule, the Commission specifically solicited comments on whether distributors and retailers might prefer to be provided with a separate certificate for insulation they receive in addition to the certification label. The Commission noted that distributors and retailers could retain a separate certificate after they have sold the certified products and could produce the certificate as a defense in any enforcement action for violation of the standard.

The Commission received three comments on this issue. One manufacturer stated that distributors and installers should be furnished with a separate certificate for their own protection, while another manufacturer opposed such a requirement. The latter commenter stated that after issuing separate certificates to its retailer-customers, the commenter asked the recipients whether they remembered receiving the certificates and if so, what was done with the certificates. According to the commenter, 73% of the retailers said they did not remember receiving a certificate; only 12% of the retailers stated that they had retained the certificates. A comment from the Federal Trade Commission suggested that the Commission should require cellulose insulation manufacturers who supply private labelers and importers to issue a separate certificate in addition to labeling the containers of insulation.

The Commission has decided not to modify the proposed rule to add any requirement that a manufacturer supply separate certificates to parties in the chain of distribution, in addition to placing the certificate on each container of insulation. The Commission emphasizes that those distributors and retailers who want a separate certificate can contractually obtain an appropriate document from the person who provides them with the insulation. Similarly, private labelers and importers who desire specific written assurance from the manufacturer that the product supplied meets the standard can require such assurance as one of the conditions of sale in any contract between the supplier and the private labeler or importer. (It should be noted that the proposed rule and final rule, below, affirmatively require the private labeler or importer to issue the certificate of compliance where the private labeler or importer is the party closest to the consumer in the chain of distribution.)

b. *Contents of certificate.* Proposed § 1209.39(a)(1) requires the certification label to contain the following statement. "This product meets the amended CPSC standard (effective October 16, 1979) for the flame resistance and corrosiveness of cellulose insulation." The label is also required to include the name of the manufacturer, private labeler, or importer issuing the certificate, the date of manufacture by day, month, and year, and the place of manufacture. In those instances where cellulose insulation is not sold in bags or other containers, the separate certificate is required to contain the same information as must appear on the certification label. (proposed § 1209.39(a)(2)).

One commenter questioned the necessity for the proposed labeling statement because the date of manufacture is also required to appear on the container and all insulation manufactured after the effective date of the amended standard must comply with its provisions. This commenter urged the Commission to eliminate the proposed labeling statement as superfluous. The commenter expressed concern that in enabling consumers to distinguish insulation which complies with the amended standard from insulation which complies with the original standard, the labeling statement will result in consumers only purchasing the newer product. The commenter concluded that inventories of insulation manufactured before the effective date of the amended standard will be difficult to sell.

The Commission points out that one of the primary purposes of the labeling statement is to enable consumers to identify insulation which complies with the amended standard. The Commission believes that consumers should be able to make an informed choice as to the kind of cellulose insulation they purchase. For this reason, the Commission has not eliminated the labeling statement in the final rule.

Another commenter urged the Commission to remove the phrase "effective October 16, 1979" from the labeling statement. The commenter noted that inclusion of the effective date of the amended standard might cause some consumers to believe that the insulation was manufactured on that date.

The Commission does not believe that the inclusion of the effective date of the amended standard on the label is necessary to identify insulation which is subject to the amended standard. In the interest of shortening the labeling statement without lessening its utility, the Commission has, therefore, decided to eliminate the requirement of including the effective date of the amended standard on the certification label and the separate certificate. The Commission notes, however, that if that standard is ever amended again, revision of the required labeling statement to include an effective date may be necessary.

One commenter requested that the Commission revise the proposed labeling statement to indicate that the insulation meets the requirements of GSA Specification HH-I-515D rather than the requirements of the amended standard for flammability and corrosiveness. The Commission has not made this change because the Commission's amended standard does not contain all of the requirements of the GSA specification, and contains some changes to the flame resistance and corrosiveness provisions of the GSA specification.

Several commenters expressed approval of the requirements of proposed §§ 1209.39(a)(1)(iii) and 1209.39(a)(2) which specify that the date

of manufacture by day, month, and year must be included on the label on each container of insulation or on the separate certificate accompanying insulation not sold in containers. One commenter noted that the date of manufacture should be permitted to appear in code. The Commission points out that coding of the date of manufacture is explicitly sanctioned in proposed §§ 1209.39(a)(1)(iii), and 1209.39(a)(2) as well as in the final rule, below.

One commenter urged the Commission to revise proposed § 1209.39(a)(1)(iii) to allow the date of manufacture to appear anywhere on the bag, as long as the date is conspicuous and appears in letters and figures meeting the size requirements in the proposal. The commenter is a manufacturer of cellulose insulation who uses stamping equipment to mark his bags with the date of manufacture. The commenter pointed out that his current equipment could not be set to place the date of manufacture on the same part of the bag where the required labeling statement would appear.

The Commission recognizes that the language of the proposal suggests that all four elements of the certificate of compliance (i.e., the statement of compliance with the applicable standard; the name of the manufacturer, importer, or private labeler issuing the certificate; the date of manufacture; and the place of manufacture) must appear in a single label on the containers of insulation. The Commission does not believe, however, that all four elements must appear at the same place on the container for the certificate of compliance to serve its intended function, so long as all of the required information appears legibly in figures and letters of the specified size. Therefore, the Commission has revised the language of § 1209.39(a)(1) below to indicate that each of the elements of the certificate of compliance may appear anywhere on the container and that the elements need not appear at the same place on the container.

c. *Responsibilities of private labelers and importers.* Proposed §§ 1209.39 (b) and (c) and proposed § 1209.40 indicate that when a private labeler or importer of cellulose insulation is the party closest to the consumer in the chain of distribution, the private labeler or importer is responsible for issuing the certificate of compliance. While the proposed rule allows private labelers and importers to issue certificates which are based upon testing performed by or for the manufacturer of the product, the proposal also provides that the private labeler or importer who certifies is ultimately responsible for ensuring that all testing has been performed properly and that all records of testing are accurate and complete.

A comment from the Federal Trade Commission suggested that the proposal be modified to state that private labelers and importers issuing certificates of compliance based on tests of the manufacturer have only a good faith responsibility for relying on the adequacy of testing and recordkeeping done by or for the manufacturer.

The Commission has not changed the language of § 1209.39 (b) and (c) in response to this comment. The Commission believes that private labelers and importers should have more than a good faith responsibility for relying on the integrity of the manufacturer's tests and testing records. With respect to importers, the Commission notes that the manufacturers in question are outside the U.S. and that it is, therefore, essential that a burden be placed on the importers, who are within the U.S., to take all reasonable steps to assure the adequacy of the manufacturer's tests. The Commission also believes that it is appropriate that private labelers who put their brands or trademarks on products be expected to take all reasonable steps to assure themselves of the adequacy of a manufacturer's tests. The Commission points out that these conclusions are consistent with the language of section 19(a)(6) of the CPSA which makes it a prohibited act to "issue a false certificate if such person *in the exercise of due care* has reason to know that such certificate is false or misleading in any material respect * * *" [emphasis added].

5. *Economic issues.* In the preamble to the proposed rule the Commission estimated the costs associated with the reasonable testing program, recordkeeping, and labeling requirements of the proposed certification rule and concluded that the costs of the proposed rule would not be burdensome.

Two commenters were concerned about the cost of labeling bags or containers in inventory on the effective date of the amended standard for compliance with the amended standard.

In the proposed certification rule, the Commission estimated that hand stick-on labels for bags or containers held in inventory would add approximately 2½ cents to the cost of each container of insulation, as well as an application cost of approximately 4 cents per container. The Commission points out that these are one-time costs during a limited period necessary to deplete inventories. While a few small manufacturers may have a significant inventory of bags or containers without the appropriate label on hand at the time of the effective date, Commission staff interviews with manufacturers indicate that, in general, the manufacturers see no major difficulties with one-time labeling costs for inventory containers. Because the Commission believes that consumers should be able on the effective date of the amended standard to identify complying containers of insulation, the Commission has not changed the certification rule in response to these comments.

Another commenter objected to the requirement in the proposed rule to mark each container of insulation with the date of manufacture by day, month, and year. The commenter stated the requirement would cost his company 5 cents per bag and would result in an $1800 per week revenue loss.

Commission staff contacted this commenter who indicated that the calculations underlying the claims in his letter were inaccurate and that his costs per week would be substantially less than $1800.

Other manufacturers contacted by Commission staff generally stated that date stamping containers of insulation would not create any great problem or expense.

The Commission points out that if an employee earning $5.00 per hour could stamp unfilled containers at a rate of 10 per minute, the cost of date stamping a container would be less than 1 cent per container for labor. (If the employee could work only half as fast, then the cost would increase to about 2 cents per container.) The manufacturing capacity of small cellulose insulation manufacturers is generally between 1000 and 2000 containers of insulation per shift. Based on these estimates, for capacity operations, the cost of date stamping the containers would be in the range of $50.00 to $200.00 per week. For small producers, however, present production is believed to be only a fraction of capacity.

One commenter was concerned that responsible manufacturers would be at a competitive disadvantage to unscrupulous manufacturers because of the self-executed certification program. Another commenter stated that self-certification unfairly allows small firms to undersell other firms. The commenter stated this could occur because small firms might do their own testing and certifying at low cost while many larger firms, who are already using commercial testing laboratories to certify

compliance with the interim standard, would presumably continue this practice under the amended standard.

As indicated above, for the reasons discussed, the Commission declines to incorporate mandatory third party certification in this rule. Under the rule, manufacturers are free to do their own testing and certifying or to use outside commercial laboratories. While an unscrupulous manufacturer might seek to take advantage of the testing flexibility in the rule, the Commission emphasizes that all cellulose insulation subject to the amended standard must meet that standard on the effective date. The Commission will test for compliance with the amended standard by using the test procedures contained in that standard.

The Commission is aware that certain small firms have been pricing their product lower than large firms. Rather than the existence of self-certification, however, the differences in transportation costs and fixed costs appear to be the main reasons small manufacturers can sometimes undersell larger manufacturers.

6. *Effective date.* The Commission proposed that the certification rule, like the amended standard, be applicable to cellulose insulation manufactured after October 15, 1979.

One commenter suggested that the effective date of the certification rule be delayed until December 31, 1979 in order to allow manufacturers sufficient time for qualifying their product for compliance with the amended standard. The commenter noted that if the effective date is not extended, commercial testing laboratories may not be able to complete qualification testing of manufacturers' products on a timely basis. Another commenter recommended that the October 15 date be extended, at least as to the requirement for certifying with labels on containers of insulation. The commenter, a large manufacturer, stated that small manufacturers can more easily comply with the labeling requirement because on October 16 they will have fewer containers in inventory to mark.

The Commission recognizes that the period of time between publication of the final amended standard and the certification rule and the effective date (approximately 14 weeks) in which manufacturers must develop and test products and produce complying packaging is somewhat limited. Nevertheless, the Commission believes that there is sufficient time for most manufacturers to qualify their products. Many manufacturers have already begun testing their cellulose insulation for compliance with the proposed amendment. In the last few months commercial laboratories' testing capacity for the amendment, i.e., the number of specimens that can be tested per month, has increased significantly.

The Commission has decided not to extend the proposed effective date of the amended standard or the certification rule. As is discussed in the preamble to the amended standard published elsewhere in this issue of the Federal Register, the primary purchasing season of insulation would be missed if the effective date was extended as requested. (September is the beginning of the purchasing season and late November is normally the time of greatest demand.) The Commission, further, believes that the effective dates of the amended standard, certification rule, and labeling requirement for proper installation of cellulose insulation should coincide. Once the standard is in effect, even without a certification rule, manufacturers are required by section 14(a) of the CPSA to certify compliance with the standard and to base their certificates on a test of each product or upon a reasonable testing program.

The Commission also believes that the proposed effective date of October 16, 1979 will allow most manufacturers time to draw down inventories of bags or containers which are labeled under the interim rather than the amended standard and thereby, limit the need for hand stick-on labels.

The Commission points out that the final version of the certification rule, below, includes at § 1209.41 an explanation of when insulation is "manufactured" for purposes of the rule. "Manufactured" is defined as that point in time when the cellulose insulation is packaged in the bag or other container in which it will be sold. Insulation which is not sold in bags or containers is "manufactured" when the insulation leaves the manufacturing site to be sold.

7. *Miscellaneous comments.* One commenter referred to a statement in the preamble of the proposal which noted that the frequency of insulation samples failing the tests in the amended standard might be reduced by the availability of commercial pre-mix chemical formulations and observed that 90 percent of failures are not due to pre-mixes but to the manufacturing process itself. The Commission recognizes that a number of factors may be involved in a particular test failure, including the technical competence and skill of a manufacturer. In the preamble statement, the Commission was not, in any sense, guaranteeing passing results from the use of a pre-mix chemical formulation, but was simply noting that such formulations might aid certain manufacturers in producing complying products.

One commenter urged the Commission to require each manufacturer to have a quality control department. The same commenter requested a list of independent testing laboratories qualified to certify compliance with the amended standard.

Sections 14 of the CPSA authorizes the Commission to prescribe reasonable testing programs for consumer products subject to safety standards and to prescribe the form and content of labels for such consumer products. However, the Commission does not have the authority to require manufacturing plants to conform to a particular organizational structure. In addition, the Commission believes that requiring each insulation manufacturer to have a quality control section would not be a useful effort since it would not necessarily produce any greater compliance with the amended standard. As far as obtaining a list of qualified laboratories, it should be noted that CPSC does not have a list of "Commission-approved" laboratories. However, the National Voluntary Laboratory Accreditation Program, which is discussed earlier in this preamble, may in the future be able to accredit laboratories for their ability to perform the tests in the amended standard.

Another commenter stated that the certification rule should require all manufacturers to register each of their plant locations.

The Commission has not incorporated such a requirement in the final rule, below, because this information is, in most instances, already available to CPSC and if not currently available to CPSC, would be obtainable through Federal and state governmental agencies, associations of cellulose insulation manufacturers, trade publications, or individual manufacturers.

Environmental Considerations

In the preamble to the proposed certification rule, the Commission noted that it had conducted an environmental assessment of the proposed amended standard which concluded that the proposed amendment would have no significant effect on the environment. (Copies of this assessment are available in the Office of the Secretary of the Commission.)

The Commission also stated its belief that the proposed certification rule

would have no significant effect on the environment. The Commission pointed out that its interim rules for carrying out its responsibilities under the National Environmental Policy Act (see 16 CFR Part 1021; 42 FR 25494) provide that product certification or labeling rules normally have no potential for affecting the environment and that environmental review of such rules is not required.

The Commission received no public comments on environmental issues involving the certification rule. Therefore, the Commission concludes that the final rule, below, will have no significant effect on the human environment and that no further environmental review is necessary.

Conclusion and Proposal

Having considered the public comments as well as the need for and the economic impact of the certification requirements set forth below, the Commission concludes that the requirements are reasonable and not unduly burdensome in light of the need for the rule. Therefore, pursuant to sections 14 and 16 of the CPSA (15 U.S.C. 2063 and 2065), the Commission amends Title 16, Chapter II, Subchapter B, by adding a new Subpart B to Part 1209, reading as follows:

PART 1209—INTERIM SAFETY STANDARD FOR CELLULOSE INSULATION

Subpart B—Certification

Sec.
1209.31 Purpose and applicability.
1209.32 Definitions.
1209.33 Reasonable testing program.
1209.34 Qualification testing.
1209.35 Product specification.
1209.36 Production testing.
1209.37 Corrective actions.
1209.38 Records.
1209.39 Certification of Compliance.
1209.40 Certification responsibility; multiple parties.
1209.41 Effective date.

Authority: Secs. 14, 16; 86 Stat. 1220, 1222; (15 U.S.C. 2063, 2065).

§ 1209.31 Purpose and applicability.

(a) *Purpose.* The purpose of this Subpart B of Part 1209 is to establish requirements that manufacturers, importers, and private labelers must follow to certify that their products comply with the Amended Interim Standard for Cellulose Insulation (16 CFR Part 1209, Subpart A). This Subpart B includes requirements for conducting a reasonable testing program, certifying with labels and separate certificates, and recordkeeping.

(b) *Applicability.* (1) Cellulose insulation which is subject to the standard includes all cellulose insulation, manufactured after the effective date (as described in § 1209.41), produced or distributed for sale to, or for the personal use, consumption, or enjoyment of, consumers in or around a permanent or temporary household or residence, a school, in recreation or otherwise. The standard applies to cellulose insulation that is produced or distributed for sale to consumers, for their direct installation or use, as well as cellulose insulation that is produced or distributed for installation by professionals.

(2) The term "cellulose insulation" is defined in § 1209.2(a) of the standard to mean cellulosic fiber, loose fill, thermal insulation that is suitable for blowing or pouring applications.

§ 1209.32 Definitions.

In addition to the definitions set forth in section 3 of the act and in section 1209.2 of the standard, the following definitions shall apply to this Subpart B of Part 1209:

"Private labeler" means an owner of a brand or trademark which is used on the label of cellulose insulation subject to the standard which bears a private label as defined in section 3(a)(7) of the act (15 U.S.C. 2052(a)(7)).

"Production interval" means a time span determined by the manufacturer, private labeler, or importer to be appropriate for conducting a test or series of tests on samples of the cellulose insulation being produced to demonstrate that the product meets the requirements of the standard. An appropriate production interval may vary from test to test. The time period for a production interval shall be short enough to ensure that if the samples selected for testing comply with the standard or a portion of the standard, the insulation produced during the period will meet the standard or the appropriate portion of the standard.

§ 1209.33 Reasonable testing program.

(a) *General.* Section 14(a) of the Consumer Product Safety Act (15 U.S.C. 2063(a)) requires each manufacturer, importer, or private labeler of a product which is subject to a consumer product safety standard to issue a certificate of compliance with the applicable standard and to base that certificate upon a test of each item or upon a reasonable testing program. Because it is not practical to test each item subject to the standard, a reasonable testing program shall be used to support certificates of compliance for cellulose insulation.

(b) *Requirements of testing program.* A reasonable testing program for cellulose insulation is one which demonstrates with reasonable certainty that insulation certified to comply with the standard will meet all requirements of the standard. Manufacturers, private labelers, and importers shall determine the types and frequency of testing for their own reasonable testing programs. A reasonable testing program may include either the tests prescribed by the standard, or any other reasonable test procedures. However, a reasonable testing program cannot consist of tests which the party issuing the certificate of compliance knows (or through the exercise of reasonable diligence should know) will pass or accept insulation which will yield failing results when subjected to any of the tests in the standard. All reasonable testing programs shall consist of four elements:

(1) Qualification tests which must be performed on samples of the manufacturer's cellulose insulation to demonstrate that the product is capable of passing the tests prescribed by the standard.

(2) A description of the cellulose insulation which passed the qualification testing. This description is known as the "product specification."

(3) Production tests, which must be performed at appropriate production intervals as long as the cellulose insulation is being manufactured.

(4) Corrective action, which must be taken whenever samples of the cellulose insulation yield unacceptable or failing test results.

(c) *Commission testing.* The Commission will test for compliance with the standard by using the test procedures contained in the standard, and will base enforcement actions for violation of the standard on the results of such testing.

(d) *Testing by third parties.* At the option of the manufacturer, importer, or private labeler, some or all of the testing for the reasonable testing program may be performed by a commercial testing laboratory. However, the manufacturer, importer, or private labeler is responsible for ensuring that all testing used to support the certificate of compliance has been properly performed with passing or acceptable results and for maintaining all records o such tests in accordance with § 1209.38 below.

§ 1209.34 Qualification testing.

(a) *Requirement.* Before any manufacturer, importer, or private labeler begins distribution in commerce of cellulose insulation which is subject

to the standard, samples of the insulation shall be tested for compliance with the standard. Manufacturers, importers, and private labelers shall determine the types of tests for qualification testing.

(b) *Timing, Sampling.* Any or all of the qualification testing required by this § 1209.34 may be performed before the effective date of the standard. Manufacturers, private labelers, or importers may select samples for qualification testing of a product in any manner they desire.

§ 1209.35 Product specification.

(a) *Requirement.* Before any manufacturer, importer, or private labeler distributes in commerce cellulose insulation which is subject to the standard, it shall ensure that the insulation is described in a written product specification.

(b) *Contents of Specification.* The product specification shall include the following information:

(1) A description of the equipment used to manufacture the insulation, including the model number and names of the equipment manufacturers, and details of any modification made to any item of equipment.

(2) A description of the cellulosic stock material used to manufacture the insulation, identifying the extent of impurities allowed.

(3) The formulation of the fire-retardant chemicals added, including their chemical constituents and their form (for example, granulated, powdered, or liquid); the amount of fire-retardant chemicals present in the finished insulation, expressed as a percentage of the total weight of chemicals and cellulosic stock; the average weight of chemicals per bag; and the name and address of each chemical supplier. Where the chemical composition or formula of a commercially pre-mixed fire retardant is not known to the insulation manufacturer, the pre-mixed fire retardant may be described simply by the name and address of the supplier and its brand or trade name.

(4) A description of the tests which were used to qualify the product as well as the dates of performance and results and actual values, where applicable, of the tests.

(5) Any other information necessary to describe the insulation.

(c) *Distribution in Commerce.* After the qualification testing required by § 1209.34 has been completed with acceptable results and the product specification required by this § 1209.35 has been recorded, the cellulose insulation may be manufactured and distributed in commerce, subject to the provisions of § 1209.36.

(d) *New Product.* Whenever a manufacturer, private labeler, or importer makes any change to any item of equipment, cellulosic stock material, or formulation of a fire-retardant chemical, or any other factor which is likely to affect the ability of the cellulose insulation to meet the standard, that change will result in a new cellulose insulation product, requiring the preparation of a new product specification. The new product must be subjected to qualification tests and must yield passing or acceptable results.

§ 1209.36 Production testing.

(a) *General.* Manufacturers, private labelers, and importers shall test the cellulose insulation periodically as it is manufactured to demonstrate that the product being manufactured is substantially similar to the product which passed the qualification testing and to demonstrate that the product being manufactured meets the requirements of the standard.

(b) *Types and frequency of testing.* Manufacturers, private labelers, and importers shall determine the types of tests for production testing. Each production test shall be conducted at a production interval short enough to ensure that if the samples selected for testing meet the standard or a portion of the standard, the insulation produced during the interval will also meet the standard or the appropriate portion of the standard.

(c) *Test failure.* If any test yields failing results, production must cease and the faulty manufacturing process must be corrected (see § 1209.37). In addition, the material from which the samples were taken may not be distributed in commerce unless the material can be corrected (see § 1209.37) so as to yield passing results and meet the standard. Cellulose insulation that does not comply with the standard cannot be sold or offered for sale.

§ 1209.37 Corrective actions.

(a) *Test failure.* When any test required by § 1209.36 yields failing or unacceptable results, corrective action must be taken. Corrective action includes changes to the manufacturing process as well as reworking the insulation product itself. Corrective action may consist of equipment adjustment, equipment repair, equipment replacement, change in chemical formulation, change in chemical quantity, change in cellulosic stock, or other action deemed appropriate by the manufacturer, private labeler or importer to achieve passing or acceptable test results.

(b) *New product.* If any corrective action required by this § 1209.37 results in a change in the product specification and a new cellulose insulation product (see § 1209.34(b)), the product specification for the new product must be recorded in accordance with § 1209.35, and qualification tests must be performed with passing or acceptable results in accordance with § 1209.34, before the new product is distributed in commerce.

§ 1209.38 Records.

(a) *Establishment and maintenance.* Each manufacturer, importer, and private labeler of cellulose insulation subject to the standard shall establish and maintain the following records which shall be available to any designated officer or employee of the Commission upon request in accordance with section 16(b) of the act (15 U.S.C. 2965(b)):

(1) A record of each product specification containing all information required by § 1209.35. (This includes information concerning the types of qualification tests as well as the results from these tests.)

(2) Records to demonstrate compliance with the requirements for production testing in § 1209.36, including a description of the types of production tests conducted and the production interval selected for performance of each production test.

(3) Records of all corrective actions taken in accordance with § 1209.37, including the specific action taken, the date the action was taken, and the test failure which necessitated the action. Records of corrective action must relate the corrective action taken to the product specification of the insulation product which was the subject of that corrective action, and the product specification of any new product which results from any corrective action.

(4) Records indicating exactly which insulation material is covered by each certificate of compliance issued.

(b) *Retention.* (1) *Product specification.* The records of each product specification shall be retained for as long as the cellulose insulation covered by that specification is manufactured and for a period of two (2) years thereafter.

(2) *Other records.* Records of production testing, corrective actions taken, and certificates issued shall be maintained for a period of two (2) years.

(c) *Confidentiality.* Requests for confidentiality of records provided to the Commission will be handled in accordance with section 6(a)(2) of the CPSA (15 U.S.C. 2055(a)(2)), the Freedom of Information Act as amended (5 U.S.C. 552), and the Commission's regulations under that act (16 CFR Part 1015, February 22, 1977).

§ 1209.39 Certification of compliance.

(a)(1) *Responsibilities of manufacturer for insulation sold in bags.* Manufacturers of cellulose insulation subject to the standard which is sold in bags or other containers shall certify compliance with the standard by marking each bag or container with the following information:

(i) The statement "This product meets the amended CPSC standard for flame resistance and corrosiveness of cellulose insulation." (This statement is the same statement provided in § 1209.9 of the standard; it need not appear twice on the bag or container.)

(ii) The name of the manufacturer, private labeler, or importer issuing the certificate of compliance. See § 1209.39 (b) and (c), below.

(iii) The date of manufacture by day, month, and year.

(iv) The place of manufacture, by city, state, and zip code, or in the case of products manufactured outside the United States, by city and country.

The information required by this § 1209.39(a) may appear anywhere on the bag or container. The information required need not appear at the same place on the bag or container. The information shall be permanent until the bag or container is opened and used. The information shall be conspicuous and must appear in letters and figures at least ¼ inch in height. The date and place of manufacture may be in code, provided the person or firm issuing the certificate maintains a written record of the meaning of the code that can be made available to consumers, persons in the chain of distribution, and the Commission upon request.

(2) *Insulation not sold in bags or containers.* The manufacturer of cellulose insulation subject to the standard which is not sold in bags or other containers shall certify compliance with the standard by accompanying each shipment or delivery of the product, with a document such as an invoice, bill, statement, or separate document, which states the following: "This product meets the amended CPSC standard for flame resistance and corrosiveness of cellulose insulation. This material was manufactured on (insert day, month, and year of manufacture) at (insert city, state, and zip code, or in the case of insulation manufactured outside the United States, city and country)." The certificate of compliance must also contain the name of the manufacturer, private labeler, or importer issuing the certificate. See §§ 1209.39 (b) and (c), below. The certificate of compliance must appear in letters and figures which are conspicuous and legible. The date and place of manufacture may be in code, provided the person or firm issuing the certificate maintains a written record of the meaning of the code that can be made available to consumers, persons in the chain of distribution, and the Commission upon request.

(b) *Responsibilities of private labelers.* A private labeler who distributes a product subject to the standard which is manufactured by another person or firm but which is sold under the private labeler's name, brand, or trademark must issue the certificate of compliance required by section 14 of the Consumer Product Safety Act and this § 1209.39. If the testing required by this Subpart B of Part 1209 has been performed by or for the manufacturer of the product, the private labeler may rely on any such tests to support the certificate of compliance if the records of such tests are maintained in accordance with § 1209.38, above. The private labeler is responsible for ensuring that all testing used to support the certificate of compliance has been performed properly with passing or acceptable results, and that all records of such tests are accurate and complete.

(c) *Responsibilities of importers.* The importer of any product subject to the standard must issue the certificate of compliance required by section 14(a) of the act and this § 1209.39. If the testing required by this Subpart B of Part 1209 has been performed by or for the foreign manufacturer of the product, the importer may rely on any such tests to support the certificate of compliance if the importer is a resident of the U.S. or has a resident agent in the U.S. and the records are maintained in the U.S. in accordance with § 1209.38 above. The importer is responsible for ensuring that all testing used to support the certificate of compliance has been performed properly with passing or acceptable results, and that all records of such tests are accurate and complete.

§ 1209.40 Certification responsibility, multiple parties.

If there is more than one party (i.e., manufacturer, private labeler, or importer) otherwise subject to the requirements of this Subpart B of Part 1209 for certain cellulose insulation, only the party closest to the consumer in the distribution chain is required to issue a certificate.

§ 1209.41 Effective date.

The requirements of this Subpart B of Part 1209 shall become effective on October 16, 1979. Any cellulose insulation manufactured after October 15, 1979 must be certified as complying with the standard. Cellulose insulation which is sold in bags or other containers is "manufactured" when the insulation is packaged in the bag or other container in which it will be sold. Insulation which is not sold in bags or containers is "manufactured" when the insulation leaves the manufacturing site to be sold.

Dated: July 2, 1979.

Sadye E. Dunn,

Secretary, Consumer Product Safety Commission.

[FR Doc. 79-20703 Filed 7-5-79; 8:45 am]

BILLING CODE 6355-01-M

---

16 CFR Part 1404

Cellulose Insulation Labeling Requirement

AGENCY: Consumer Product Safety Commission.

ACTION: Final rule

SUMMARY: The Commission issues a final rule to require manufacturers of cellulose insulation to give information to installers and consumers concerning the fire hazard of improper installation of the product. The rule requires the manufacturer to label containers of cellulose insulation to recommend installing the insulation away from recessed lighting fixtures and exhaust flues of heat producing devices or apparatus, such as furnaces, water heaters, and space heaters. The Commission is issuing this rule since it believes that consumers and installers need this information to avoid the fire hazard associated with improperly installed cellulose insulation. The effect of this rule should be to reduce the likelihood of injuries from fires resulting from improper installation of cellulose insulation.

DATES: Cellulose insulation manufactured after October 15, 1979 must comply with the labeling requirements issued in this notice.

FOR FURTHER INFORMATION CONTACT: Wade D. Anderson, Directorate for Compliance and Enforcement, Consumer Product Safety Commission, Washington, D.C. 20207, (301) 492-6400.

SUPPLEMENTARY INFORMATION:

A. Background

On July 11, 1978, the "Emergency Interim Consumer Product Safety Standard Act of 1978," Pub. L. 95-319, became law. This legislation amended the Consumer Product Safety Act (CPSA) [15 U.S.C. 2051 et seq.] by adding a new section 35 [15 U.S.C. 2082] that required the Commission to issue an interim consumer product safety standard for cellulose insulation, based on requirements for flame resistance and corrosiveness in General Services Administration (GSA) Specification HH-I-515C, as effective February 1, 1978.

As required by the statute, the Commission, on August 8, 1978, published the interim consumer product safety standard (16 CFR Part 1209) addressing the flammability and corrosiveness of cellulose insulation (43 FR 32540, corrected 43 FR 39564, September 6, 1978). All cellulose insulation manufactured after September 7, 1978 must comply with the interim standard.

The "Emergency Interim Consumer Product Safety Standard Act of 1978" also provides that until a final consumer product safety standard is in effect, the Commission must propose as an amendment to the interim standard each revision GSA issues that supersedes the requirements for flame resistance and corrosiveness in GSA Specification HH-I-515C. The Commission must issue the amendment unless the Commission determines, after consulting with the Secretary of Energy, that the amendment is not necessary to protect consumers from the unreasonable risk of injury associated with flammable or corrosive cellulose insulation or that implementation of the amendment will create an undue burden on persons who are subject to the interim consumer product safety standard.

On June 15, 1978, the General Services Administration issued GSA Specification HH-I-515D, which contains requirements for flame resistance and corrosiveness for cellulose insulation that supersede the requirements of GSA Specification HH-I-515C. As required by Pub. L. 95-319, the Commission proposed an amendment to its interim standard for cellulose insulation incorporating the flame resistance and corrosiveness provisions of HH-I-515D, along with several changes made by the Commission (44 FR 12872, March 8, 1979). The Commission also proposed a certification rule, with requirements that manufacturers, private labelers, and importers must follow to certify that their products comply with the amended interim standard (44 FR 12864, March 8, 1979). Elsewhere in this issue of the Federal Register, the Commission has issued both a final regulation amending the interim standard and a final certification rule. The amendment and certification rule will become effective October 16, 1979, the same date that the labeling regulation issued here will become effective.

The amendment to the interim standard establishes performance requirements for cellulose insulation to address the unreasonable risk of injury from flammable or corrosive cellulose insulation. However, the amendment does not adequately address hazards that may be caused by the improper installation of insulation. In the *Conference Report* on Pub. L. 95-319 the conferees stated that improper installation of cellulose insulation has been identified as a major cause of insulation fires. The conferees stated their expectation that the Commission would issue a rule under section 27(e) of the act to require manufacturers to provide safety information, on installation, to consumers (H.R. Rept. No. 95-1322, 95th Congress, 2d. Sess. 9(1978)).

Section 27(e) of the CPSA (15 U.S.C. 2076(e)) authorizes the Commission to require manufacturers of consumer products to provide the Commission with such performance and technical data related to performance and safety as may be required to carry out the purposes of the act. Section 27(e) also authorizes the Commission to require manufacturers of consumer products to give notification of such performance and technical data at the time of original purchase to prospective purchasers and to the first purchaser of such product for purposes other than resale, as it determines necessary to carry out the purposes of the act. As provided in section 2(b) of the CPSA (15 U.S.C. 2051(b)), one purpose of the act is to protect the public against unreasonable risks of injury associated with consumer products.

On December 20, 1978, the Commission proposed a rule under section 27(e) of the act to require manufacturers to provide safety information, on installation, to consumers and professional installers (43 FR 59390). The Commission published the proposal after considering fire incident information, information concerning improper installation, and technical information indicating that improperly installed cellulose insulation presents a serious risk of injury. Based on this information, the Commission concluded that a serious risk of injury from fire is associated with cellulose insulation that is improperly installed too close to the sides or over the top of a recessed electrical light fixture or where cellulose insulation is installed too close to the exhaust flues from heat producing devices or apparatus such as furnaces, water heaters, and space heaters. Cellulose insulation that is improperly installed may ignite in a relatively short time as a result of the heat that is trapped by the insulation and builds up around the ignition source. The insulation may ignite even if the insulation complies with the amended interim standard based on HH-I-515D and even if a recommended wattage bulb is used in the recessed electrical light fixture. The ignition of the insulation can lead to flaming combustion of the structure, exposing consumers to the risk of serious injury from fire.

B. Explanation of the Rule

The regulation issued here at § 1404.4(a) requires manufacturers of cellulose insulation to provide prospective purchasers and the first purchaser for purposes other than resale (consumers and professional installers) with performance and technical data by placing a label on containers for cellulose insulation. The label instructs persons to avoid the flammability hazard by not installing or maintaining the product over or within three inches of the sides of recessed electrical light fixtures. The label suggests that persons installing the insulation use a barrier to permanently keep the insulation away from the recessed electrical light fixture. The label advises persons installing the insulation to check with local building or fire officials for guidance on barriers and installation requirements. The labeling statement at § 1404.4(a) also cautions persons to avoid the flammability hazard by not installing or maintaining the product near exhaust flues from heat-producing devices and apparatus such as furnaces, water heaters, and space heaters.

The label also requires cellulose insulation manufacturers to include a request to installers to remove the label and give it to the consumer after the insulation has been installed. The Commission has included this request in the label since the label information would benefit consumers by informing them of the importance of keeping the insulation away from recessed light fixtures and heat producing devices.

As required by § 1404.4(b) the label statement must appear prominently and

conspicuously on the cellulose insulation container in letters of a specified minimum height and enclosed within a rectangle formed by lines of a specified minimum width. The required statement must be printed legibly in a color which contrasts with the background.

Section 1404.4(c) provides that manufacturers may use any type of label, including one which is pressure-sensitive or glued-on, to meet the requirement in this notice provided the label will remain attached to the container for the expected time interval between the manufacture of the product and its installation.

The label requirement in this section is in addition to the label required by § 1209.9 of the Commission's amended interim standard for cellulose insulation, and is in addition to the label required by section 1209.39(a) of the Commission's certification rule (16 CFR Part 1209, published elsewhere in this issue of the Federal Register). Manufacturers may combine these labeling statements in the same label.

C. Response to Comments

In response to the proposal, the Commission received thirty-two comments from manufacturers, trade associations, consumer groups, and other interested persons. These comments are available for inspection in the Office of the Secretary of the Commission. An explanation of the relevant issues raised by the comments, and the Commission's response, is given below:

(1) *Need for the labeling requirement.*—Several commentors supported the labeling requirement as being necessary and appropriate to warn persons installing cellulose insulation of the serious risk of fire associated with installing cellulose insulation improperly around recessed lighting fixtures or other heat producing devices. One commentor stated that the benefits of the warning label would far outweigh any costs of the label. Another commentor stated an opinion that the label would have sufficient impact to prevent many fires even though everyone may not follow the label instructions. One commentor stated that the labeling requirement is a reasonable and proper use of the Commission's authority to alert the public. One commentor, the staff of the Bureau of Consumer Protection of the FTC, explained that the CPSC rule would not be duplicative or in conflict with the FTC's proposed trade regulation rule concerning the labeling and advertising of home insulation.

Several commentors questioned the need for the label. One commentor stated that voluntary labeling should be encouraged, rather than mandatory labeling. According to another commentor, the labeling requirements are unwarranted since no deaths have been caused by cellulose insulation.

As a result of the serious risk of injury from fire associated with cellulose insulation that is improperly installed and the lack of clear, uniform instructions to installers, the Commission agrees with those commentors who believe that the labeling requirement is necessary. The Commission does not believe that the absence of deaths associated with cellulose insulation means that a labeling requirement is not necessary. Although the Commission has not received reports of deaths associated with improperly installed cellulose insulation, the Commission has received reports of fire incidents associated with improperly installed cellulose insulation. The fire incident information and technical information concerning the effects of improperly installing cellulose insulation, discussed in section *G.* of this preamble, show that there is a serious risk of injury from fire associated with improperly installed cellulose insulation. The Commission does not believe that a voluntary labeling program would be an effective way in which to provide installers with information concerning the safe installation of insulation, since there are many manufacturers of insulation, making it difficult to monitor compliance, and since the labeling of each manufacturer could be different, even if the Commission suggested a label.

One commentor stated that while the labeling requirement was necessary, labeling was only part of the solution. According to the commentor, since installers may not read labels, an educational program for installers and consumers may be necessary. Another commentor stated that the labeling rule would not solve the problem. According to the commentor the manufacturer of the light fixture and the electrical contractor should be held responsible for providing sufficient protection. Several commentors suggested that requirements be established for recessed lighting fixtures to minimize the fire hazard. One commentor suggested that the Commission ban certain recessed lighting fixtures without reflective liners.

The Commission agrees with the commentor who suggested that labeling is not the entire answer. The Commission has planned an information and educational program that will be directed toward professional installers and consumers. As part of this program, the Commission is planning to hold a series of workshops across the country for installers, building code officials, and other local officials in order to inform them of proper installation practices for cellulose insulation. Another part of the program will provide pamphlets and articles directed toward consumers which will highlight proper installation of insulation materials. Although the Commission believes that manufacturers of recessed electrical light fixtures and electrical contractors can help improve the safety of light fixtures, the Commission still believes that the labeling rule is needed since many recessed electrical light fixtures have already been installed without protective barriers or other devices for fire protection. Since many recessed electrical light fixtures have already been installed without protective barriers, the Commission does not believe that prohibiting certain types of recessed light fixtures would, in itself, solve the problem. In addition, the label is necessary since it warns against fires that may be caused where the insulation is improperly installed around exhaust flues or other heat-producing devices, in addition to recessed electrical light fixtures.

(2) *Whether the labeling requirement should apply to other types of insulation.*—Several commentors claimed that the labeling requirement should be applied to other types of insulation, as well as cellulose insulation. One commentor claimed that fibrous glass insulation with asphalt backed vapor barriers could lead to a fire when the insulation is installed next to, or close to, chimney flues or recessed lighting. Another commentor stated that a fire had resulted where a vapor barrier on fibrous glass insulation ignited. Another commentor stated that all improperly installed loose-fill insulation presents fire hazards. According to the commentor, the Commission was arbitrary in not requiring similar labeling for other types of insulation. One commentor stated that all types of insulation should be kept away from recessed light fixtures since the insulation itself would trap heat, so that the light fixture could then overheat and cause an electrical fire. Other commentors claimed that the labeling requirement should be applied to all insulation since the National Electrical Code (NEC) includes similar instructions for all types of insulation. One commentor stated that the labeling

requirement should be applied to all types of insulation since the mineral wool insulation manufacturers have voluntarily agreed to label their products with similar installation instructions. In support of the argument that labeling should be required for all types of insulation, this commentor referred to tests conducted by the Commission staff in which the wood frame of the test box, but not the insulation itself, burned when the insulation was improperly installed. According to several commentors, the failure to include warnings concerning other types of insulation could mislead the consumer into believing that recessed light fixtures may be covered by other types of insulation.

In the proposal, the Commission stated that the labeling requirement was confined to cellulose insulation since most of the fire incident data available to the Commission involved cellulose insulation rather than other types of insulation, and since Congress has indicated its intent that the Commission develop a rule for cellulose insulation (43 FR 59393). The fire incident information available since the proposal still indicates that most fires involve cellulose insulation rather than other types of insulation. Information available to the Commission indicates that improperly installed cellulose insulation can smolder and sustain combustion. The Commission believes that these properties, which have not been shown to be associated with mineral wool or other types of insulation, could contribute to the fire hazard associated with improperly installed cellulose insulation.

The Commission's decision not to propose a requirement that other types of insulation be similarly labeled does not imply that other types of insulation should be installed improperly around recessed electrical light fixtures or heat sources. As several commentors have indicated, the NEC and other code authorities recognize that all types of insulation should be kept away from recessed electrical light fixtures and other heat sources. As one commentor stated, in tests conducted by the Commission staff the wood frame of the test box, rather than the insulation itself, burned when the insulation was improperly installed. The Commission stated in the proposal that members of the mineral wool insulation industry had agreed in principle to label their products to address, among other things, clearance around heat sources and proper installation of insulation with flammable vapor barriers (43 FR 59393). The Commission believes that all currently manufactured mineral wool insulation products are adequately labeled. Since mineral wool manufacturers have voluntarily labeled their products, the Commission does not believe that the lack of a mandatory requirement for mineral wool insulation would lead installers to believe that recessed electrical light fixtures may be covered by other types of insulation.

As a result of the information available at this time, the Commission does not believe it is necessary to extend the labeling requirement concerning the safe installation of cellulose insulation to include other types of insulation. However, the Commission will continue to monitor any available fire incident information and information concerning the flammability of other types of insulation. If the Commission obtains information in the future indicating that a mandatory labeling requirement is needed concerning the safe installation of other types of insulation, the Commission will propose such a requirement.

(3) *Labeling Statement.*—Several commentors requested that the content of the labeling statement be changed. One commentor suggested that the label include a statement concerning the need to ventilate cellulose insulation to prevent moisture from being trapped in the insulation. According to the commentor, the trapped moisture would increase the corrosiveness of the insulation and would adversely affect the permanency of the chemical fire retardants used in the insulation. Another commentor also recommended that the label address the effects of moisture on insulation and the structural integrity of the building.

The Commission believes that the corrosiveness requirements of the amended interim standard will be effective in virtually eliminating very corrosive combinations of flame retardant chemicals and cellulose insulation. Available information does not show that moisture in insulation will adversely affect the corrosiveness of flame-retardant chemical/insulation combinations meeting the amended interim standard. Based on presently available information, the Commission does not believe that moisture in insulation would lead to excessive migration of the flame retardant chemicals unless the insulation is excessively drenched. Limited data presently available indicates that in some instances moisture may actually improve the flame resistance of the insulation. The Commission also has no information indicating that a real risk of injury is presented by the possibility that moisture trapped in insulation meeting the corrosiveness provisions of the standard may adversely affect the structural integrity of the building. As a result, the Commission does not believe that the label should be revised as suggested by the commentors.

Several commentors suggested that the label be revised to explain what a permanent barrier is, and give examples of suitable barriers.

The Commission does not believe it is practical to list specific types of barriers on the label. The Commission has revised the label to advise installers and consumers to check with local building or fire officials for guidance on installation and barrier requirements.

One commentor recommended that the term recessed light fixture be better explained to eliminate any confusion by the home-owner who installs the insulation.

The Commission believes that the term recessed light fixture is generally understood by most installers of insulation. Although the Commission could include a lengthy general definition of the term, such a definition may lead to additional confusion among homeowners who install the insulation.

One commentor suggested that the order of the first paragraph of the label be revised to state that insulation should be kept "at least three inches away from recessed light fixtures, and that insulation should be kept away from the exhaust flues of furnaces, water heaters, space heaters or other heat producing devices."

The Commission believes that the order of the label is sufficiently clear in warning people to keep insulation away from other heat-producing devices. As proposed, the second paragraph of the label statement included instructions about heat producing devices in addition to recessed light fixtures. If the Commission adopted the change suggested by the commentor, the change may create confusion by separating the instruction not to place insulation over the light fixtures from the instruction to keep cellulose insulation at least three inches from the sides of recessed light fixtures.

One commentor suggested that the Commission also require manufacturers to include an additional label that could be affixed to the heat producing devices to remind consumers of the potential hazard.

Manufacturers may voluntarily include additional labels to be affixed to heat producing devices. However, the Commission does not believe it is necessary to require additional labels, since such labels would be duplicative

of the information on the label currently required.

One commentor claimed that the label should not recommend the use of open top barriers to keep cellulose insulation away from light fixtures and flues. The commentor stated that open top barriers are not effective since homeowners will attempt to eliminate drafts caused by the open top barrier by placing insulation in the barrier, thereby defeating the purpose of the barrier, or by placing a lid on the barrier after the installer has left. According to the commentor placing a lid on the barrier will cause temperatures to exceed acceptable limits for building materials. The commentor stated that an effective five sided protective device had been developed that prevented insulation and building materials from reaching ignition temperatures.

Although it is possible that some consumers may deliberately defeat the purpose of the barrier by placing insulation in the barrier or by covering the barrier, the Commission believes that a permanent open top barrier will generally be effective. If the installer removes the label and gives the label to the consumer, as requested, or if the consumer installs the insulation, then the label would inform the consumer of proper installation instructions. Although presently available information indicates that some closed top barriers may trap heat and lead to an electrical failure and subsequent potential fire associated with the light fixtures, some closed top barriers that have been designed to operate with insulation surrounding them may be effective when used with certain recessed electrical light fixtures. Since, in these instances, an open-top barrier would not be necessary, the Commission has revised the label to eliminate the specific reference to open-top barriers, and has removed the installation guidance concerning open-top barriers from the label. The Commission has revised the label to advise installers to check with local building or fire officials for guidance on installation and barrier requirements.

Several commentors suggested that the phrase "Warning" and "To Prevent Fires" be deleted from the label since the phrase implies a much greater degree of danger than exists in the real world. According to the commentors a simple "Caution" would be sufficient. One commentor suggested using the word "Caution" and the phrase "Potential Fire Hazard" instead.

As stated elsewhere in this notice, the Commission believes that a serious risk of injury is associated with cellulose insulation that is improperly installed. However, since the Commission believes that the word "Caution" and the phrase "Potential Fire Hazard" would be effective in presenting this message, the Commission has accepted the commentor's suggestion to change the label to include these statements. The Commission does not intend these changes to imply any less degree of danger. For example, under section 2(p)(1) of the Federal Hazardous Substances Act (15 U.S.C. § 1261(p)(1)) "Caution" and "Warning" are interchangeable as signal words for labeling hazardous substances.

One commentor claimed that the label should contain more explicit instructions for keeping insulation away from heat sources. According to the commentor, installers presently use many different methods for this purpose, and most of these methods are poor. The commentor recommended a particular aluminum barrier with warning markings as being effective in keeping insulation away from heat sources and also warning consumers. The commentor also claimed that the label would not be adequate to alert homeowners to the hazard. Several commentors claimed that the label statement requesting the installer to remove the label and give it to the consumer was not realistic and would not be followed in practice. One commentor suggested that, instead, manufacturers should be requested to provide consumers with fact sheets containing this information before the insulation is purchased.

The Commission believes that the labeling statement contains instructions that, if followed, will be effective in reducing the risk of injury from fires associated with improperly installed cellulose insulation. Since a number of different barriers may be effective in keeping cellulose insulation away from recessed lighting fixtures and other heat producing devices, the Commission does not believe that the label should specify any particular device. Some installers may not remove the label and give it to the consumer. However, since this action requires little effort on the part of the installer, the Commission believes that many installers will remove the label. The Commission will encourage this action in its information and education program directed toward installers. Since most cellulose insulation is installed by professional contractors, the Commission does not believe that requiring manufacturers to provide consumers with fact sheets at the time of purchase would be an effective way of conveying this information.

One commentor suggested that the word "cellulose" be eliminated from the insulation label so that cellulose insulation products are not given a negative connotation.

The Commission believes that the word "cellulose" should remain on the label to enable consumers to identify the insulation. The Commission has no information to indicate that a label identifying the insulation and providing proper installation instructions would give cellulose insulation products a negative connotation.

Another commentor suggested that the label also include summaries of test results conducted by the Commission staff on recessed lighting fixtures and cellulose insulation. According to the commentor, including this information would have a greater impact on the consumer, and make it less likely that the label would be ignored.

The Commission does not believe it is necessary to include such test results on the label since such results may become outdated by tests conducted in the future and since the inclusion of such results may confuse installers and consumers by resulting in a more lengthy label.

One commentor suggested that the label also include a statement about the proper installation of insulation around electrical outlets to prevent fires.

At the present time the Commission has not fully analyzed available data concerning the likelihood of fires associated with insulation installed around electrical outlets. For this reason, the Commission has not included a statement in the label concerning proper installation around electrical outlets.

Another commentor suggested that damaged electrical wires and aluminum wiring be included in the list of devices that cellulose insulation should be kept away from.

At the present time the Commission staff is considering the effects of various types of insulation and wiring. If the Commission determines that a hazard exists and that public notification is required concerning the effect of insulation and wiring the Commission will take appropriate action.

One commentor requested that the regulation specify the physical location of the label on the container.

The Commission does not believe that it is necessary to specify the physical location of the label on the insulation container, since the regulation at section 1404.4(b) specifies that the labeling must be prominent and conspicuous. As

discussed below, the regulation also specifies a minimum size for the labeling that will help ensure that the label is prominent and conspicuous regardless of where it appears on the container. These provisions will allow the manufacturer flexibility in locating the label on the container, while ensuring that the label is prominent and conspicuous for consumers and installers.

One commentor suggested that the Commission's toll free number be placed at the end of the label to assist in answering questions and obtaining additional information.

The Commission's telephone numbers are widely available through local telephone directories and information, so that consumers and professional installers may call the Commission for information concerning the proper installation of cellulose insulation. The Commission does not believe it is necessary to require the Commission's toll free number on the label, since the number is available by other means and since the number may change in the future.

One commentor stated that the proposed label is in conflict with the Oregon State Building Code and probably other building codes. According to the commentor, the Commission's regulation would confuse and complicate local building codes.

The commentor did not explain how the Commission's label conflicts with the Oregon State Building Code or other building codes. Since the Commission's label is based on provisions of the National Electrical Code, a code which forms the basis of many local building codes, the Commission does not believe that the label requirement is in conflict with many state or local building codes. Although the specific wording of the Commission's label may be different than the wording in certain building codes, the Commission believes that the meaning of the Commission's label is essentially the same as that of the National Electrical Code and many building codes, for installing cellulose insulation. The Commission has included a statement on the label that advises installers to check with local building or fire officials for guidance on installation and barrier requirements.

One commentor questioned the requirement that the letters of the label be at least ¼ inch in height. According to the commentor this requirement is unrealistic and would require approximately 81 square inches of space.

The Commission agrees with the commentor that the description of the size of the label at section 1404.4(b) should be revised, since there may be some ambiguity in interpreting the language in section 1404.4(b) that could result in an oversized label. Accordingly, the Commission has revised this section to specify that the word "Caution" must appear in capital letters at least ¼" high, the words "Potential Fire Hazard" and "Request to Installer" must appear in capital letters at least 3/16" high; and the remainder of the label statement must appear in capital letters at least 3/16" high with lower case letters in corresponding proportion but at least ⅛" high. As revised, the label would be approximately 6.75 inches by 5.5 inches, and would occupy approximately 37.125 square inches. The Commission believes that this revision will avoid ambiguity and would make the label statement sufficiently large to be readily apparent to prospective purchasers and installers of the product.

One commentor requested that the label include a statement explaining why there is a fire hazard involved.

The Commission does not believe that it would be appropriate to include a full explanation of the fire hazard scenario in the label, since such an explanation would be lengthy and would be likely to decrease the emphasis placed on the other information in the label. The Commission believes that the phrase "POTENTIAL FIRE HAZARD" on the label is sufficient to convey the importance of following the instructions on the label.

Several commentors suggested that manufacturers be allowed to design their own wording for the label, as long as the intent remains the same.

The Commission believes it is important that persons installing cellulose insulation be given clear and explicit installation instructions. In order to avoid inconsistencies that may cause confusion among professional installers and consumers, the Commission believes that uniform wording is necessary.

(4) *Economic effect of the labeling requirement.*—Several commentors suggested that the regulation would have a negative economic effect on the cellulose insulation industry. According to these commentors, the warning is so negative that it would discourage potential purchasers from buying the product.

The Commission does not agree with the commentors that the labeling requirement would have a negative economic effect on the cellulose insulation industry by deterring potential purchasers. The commentors have not presented any facts in support of their contention that there would be an adverse effect. The label required by the regulation contains simple and explicit installation instructions that are not alarming or negative. Based on a limited survey conducted by the Commission of 125 different cellulose insulation containers, the Commission found that nearly ninety percent of these containers had labeling warning against improper installation. Many of these labels were used in 1977, a period of record sales for the cellulose insulation industry.

(5) *Effective date of the labeling requirement.*—One commentor suggested that the effective date of the Commission's label requirement be made to coincide with the effective date of the label that would be required by the FTC's trade regulation rule for thermal resistance of insulation.

In order to alleviate possible burdens on cellulose insulation manufacturers, while presenting information to professional installers and consumers as soon as possible, the Commission has made the effective date of the section 27(e) labeling regulation October 16, 1979, the same date as the labeling requirement under the Commission's amended interim standard and certification rule. The FTC's trade regulation rule, which applies to all insulation manufacturers, will become effective at approximately the same time as the Commission's labeling requirements. The Commission's labeling regulation does not conflict with or duplicate disclosures that would be required by the FTC's trade regulation rule.

Another commentor requested that the August 31, 1979 suggested effective date of the regulation in the proposal be changed to June, 1979 since there is likely to be an increase in installations over the summer.

The Commission has changed the August 31, 1979 effective date in the proposal to October 16, 1979, so that the effective date coincides with the effective date of the amended interim standard and certification rule. Since this regulation is being issued in July, 1979 the Commission does not believe that an effective date in the summer of 1979 would provide manufacturers with sufficient notice to have containers properly labeled. Information available to the Commission indicates that the primary purchasing season for insulation is not in the summer but begins in September and is greatest in late November.

Another commentor suggested that the effective date be extended beyond

the proposed date of August 31, 1979. This commentor claimed that the extension was needed as a result of the large number of empty bags in inventory and the high cost of temporarily labeling these bags.

The Commission has changed the effective date of the labeling requirement from August 31, 1979 to October 16, 1979. This date is almost 15 weeks after publication of this notice and should provide most manufacturers with time to deplete a large number of empty bags in inventory, although some manufacturers may have a significant inventory of bags on hand on the effective date. For these manufacturers, there would be a one-time relabeling cost of approximately six to seven cents per bag using hand stick-on labels until the inventory of bags is depleted.

(6) *Additional Comments.*—One commentor questioned the effectiveness of the label, and stated that printed warnings on insulation packaging are frequently ignored.

The Commission believes that the label requirement is needed since some cellulose insulation bags are presently without labeling for proper installation and others are not clearly labeled. Although it is possible that some persons may ignore the warnings on the insulation packaging, the Commission believes that by requiring simple and explicit safety information the label requirement will increase the likelihood that professionals and consumers will install the product in a safe manner.

One commentor suggested that the Commission establish a licensing program for insulation contractors that would require proper application procedures and proper insurance coverage. Although state and local governments may license insulation contractors, under the CPSA the Commission does not have this authority. The Commission believes that the label requirements issued here, along with an information and education program directed toward installers and consumers will be effective in reducing the serious risk of fire associated with improperly installed cellulose insulation.

One commentor suggested that a uniform label be developed that incorporates all label disclosures required by the CPSC, FTC, and DOE. It is not practicable for the Commission to have the same effective date for its labeling requirements as the DOE, since the effective date of the Commission's amended interim standard and certification rule and the effective date of the labeling rule issued here is substantially before the scheduled effective date of the DOE rules. The FTC rule is scheduled to become effective at approximately the same time as the Commission's labeling requirements. The Commission has been working with the FTC and DOE to ensure that the label requirements of these agencies do not conflict and are not duplicative. For these reasons, the Commission has not accepted the commentor's suggestion.

D. Environmental Considerations

Based on its consideration of the potential environmental impact of the regulation set forth below, the Commission concludes that the environment will not be significantly affected and that an environmental impact statement is not necessary. The Commission's regulations for environmental review (16 CFR Part 1021, § 1021.5) provide that labeling rules are normally non-major actions with little or no potential for affecting the environment, so that an environment review is not normally required. The Commission believes that this labeling rule is not a major action anticipated to affect the environment.

E. Effective Date

The labeling requirements issued below apply to products manufactured after October 15, 1979. (For the purposes of this regulation, the cellulose insulation product is manufactured when the insulation is packaged in the bag or container intended to be sold to the installer or consumer.) The Commission believes that this date would allow most manufacturers time to deplete inventories before the fall peak purchasing season, since there are approximately 15 weeks between this publication of the final rule and its effective date. This interval should be sufficient time in which to order and develop new labels, to introduce them into production, and to bring manufacturers' inventory into compliance.

F. Penalties

Manufacturers, including importers, of cellulose insulation must comply with the requirements of the rule on the effective date. Failure to comply with the rule is a prohibited act, as specified in section 19(a)(9) of the CPSA, and could lead to civil and criminal penalties under sections 20 and 21 of the CPSA. In addition, section 22 of the act authorizes the Commission to obtain an injunction from a United States district court to restrain a violation of the labeling requirement.

G. Information Supporting the Labeling Requirement

Fire incident information available to the Commission indicates that there is a serious risk of injury from fire associated with improperly installed cellulose insulation. The Commission has 51 in-depth investigation reports [through April 15, 1979] which state the ignition source of fires involving cellulose installation. Thirty-one of the reports identify recessed electrical light fixtures as the ignition source. The Commission has seventeen consumer complaints and news reports stating an ignition source for fires involving cellulose insulation. Nine of these complaints and reports identified recessed lighting fixtures as the ignition source. The other ignition sources in the fire incident data include furnaces (including attic furnaces), a vent pipe from a stove, a drop light, cigarettes, a fire place, a ceiling exhaust fan, surface mounted lights, and damaged electrical wires. The in-depth investigations indicate that safety information is needed by professional installers of cellulose insulation as well as consumers who install their own insulation. Of forty-five investigations of incidents, where the installer was identified, forty-two incidents involved professional installation and three involved home-owner installation.

A review of the available in-depth investigations reveals patterns that explain how consumers could be injured in a fire resulting from improperly installed cellulose insulation. The families in eight reports were awakened by the smell of smoke, and, in one case, the house was filled with smoke. In four other incidents, the families were awakened by a passing policeman or other person and alerted to the fact that their home was on fire. The intensity of six fires extensively damaged or destroyed the home. All of the members of these families faced the possibility of injury or death if someone had not noticed the fire and/or smoke.

In addition, the Commission has received numerous fire incident reports indicating cellulose insulation as the first material to ignite and recessed light fixtures as the source of ignition. Most of these reports are Fire Incident Reports or computer print outs where the fire scenario is not developed. However, the Commission has obtained detailed narrative reports on some fires. Six fires in 1978 and 1979 from Oregon link the presence of cellulose insulation covering a recessed light fixture as the cause of heat build-up which resulted in a fire.

The Commission has information showing that cellulose insulation is being installed improperly around recessed lighting fixtures. CPSC investigators have inspected the attics of sixteen homes with recessed light fixtures that had cellulose insulation installed after January 1, 1976. (These homes were identified from calls to the CPSC Hotline. Although every home in the United States with the same characteristics did not have a chance of being selected for inspection, there is no reason to believe that the homes selected for inspection are atypical of other homes with cellulose insulation and recessed electrical light fixtures.) The inspections revealed that six out of the sixteen homes had cellulose insulation completely covering the recessed light fixtures. One home had cellulose insulation over rockwool insulation that totally covered the fixture. Another home had a fixture that was covered only by fibrous glass insulation. Two additional homes had cellulose insulation completely covering fixtures that were presumed to be protected by being surrounded by non-flammable material. In another home, cellulose insulation covered the light fixtures at installation, however, a utility inspector uncovered the fixture. The five remaining homes had light assemblies free of, or with only a small amount of insulation touching the fixture. In no home was the light fixture protected in such a way as to keep insulation permanently away from the light assembly.

In addition to the information concerning improper installation and fire incidents associated with improperly installed cellulose insulation, the Commission has the following technical information indicating that improperly installed cellulose insulation presents a serious risk of injury:

(1) *CPSC Insulation Recessed Light Report, July 1978 from D. Toms of the CPSC Engineering Laboratory to P. Armstrong, CPSC Directorate for Engineering Sciences.* This report, including video-taped experiments, concerns tests conducted by the CPSC laboratory involving 51 samples of cellulose insulation from 37 manufacturers and 23 recessed lights of various configurations. The laboratory results indicate that a fire may result when cellulose insulation that passes the radiant panel and smoldering combustion tests of GSA Specification HH-I-515D is installed around and over certain incandescent recessed lighting fixtures when used with recommended wattage bulbs.

The Commission staff conducted smoldering combustion tests and flooring radiant panel tests specified in HH-I-515D on 51 samples of cellulose insulation collected around the country by the Commission's field offices. The Commission staff selected 8 of the 51 samples of cellulose insulation. Six of these samples passed both the smoldering combustion test and radiant panel test. The printed labels on the bags of three of these eight samples claimed that the insulation had flame spread ratings under 25 as measured by the Steiner tunnel test referenced in HH-I-515C. The printed labels on the bags of five of the samples claimed that the insulation met all of the requirements of HH-I-515C. Each of the eight samples was placed one at a time in an attic mock-up section with a recessed electrical light fixture until smoldering combustion was evident. In two of the eight tests, the smoldering was allowed to continue until flaming was evident. The other tests were stopped before flaming was evident to prevent destruction of the test equipment. Flame was observed at the wood frame of the test box, and not from the insulation itself. One of the two flaming tests was recorded on video tape. In both of the flaming tests, electricity to the light fixture was shut off over 45 minutes before flaming combustion was evident.

In six laboratory tests the cellulose insulation started smoldering in less than eight hours. In two other tests the open flame condition occured within 11 hours. The report demonstrates that some recessed electrical lights reach temperatures in excess of that required to initiate smoldering combustion in some types of cellulose insulation.

(2) *NBS Tests Involving Recessed Light Fixtures.* NBS conducted tests involving eight recessed light fixtures similar to the tests later conducted by the Commission's laboratory. In these tests conducted at the National Bureau of Standards, cellulose insulation was placed around a recessed light fixture installed between simulated attic floor joists. A bulb exceeding the rated wattage of the fixture was used in these tests. These tests showed that fires could be initiated by insulation over these recessed light fixtures when light bulbs exceeding the rated wattage were used.

(3) *Tennessee Technological University Report, Department of Energy.* (Oak Ridge National Laboratory, Tennessee Technological University). This draft report was developed under a Department of Energy contract to consider the safety of recessed lights and cellulose insulation The report states it has been dramatically demonstrated that over-lamped recessed light fixtures improperly covered with cellulose insulation are fire hazards. The experimental work also indicates that the hazard can be reduced and possibly eliminated by requiring an open top barrier to accompany the fixture.

(4) *July 25, 1977 Report by Bruce V. Ettling of Technical Fire Investigation Services.* This report also states that it is possible to ignite some cellulose insulation with a recessed lighting fixture even where the cellulose insulation does not burn in a flame test.

(5) *Oklahoma City Fire Department Headquarters Report—July 27, 1978, Protective Cover for Recessed Light Fixtures.* In this report the Assistant Fire Chief of the Oklahoma City Fire Department states that attic fires result when enough insulation is placed directly on top of recessed light fixtures, regardless of the type of insulation. According to the Assistant Fire Chief, insulation holds the heat in, so that the temperature inside a recessed light fixture can build to as high as 600 degrees Fahrenheit when enough insulation is placed on top of the fixture. In cases involving non-flammable insulation, the fires are caused by the conductance of heat from the light fixtures along hangers and conduits to wood framing members in the attics. According to the Assistant Fire Chief the report was based on fire incident experience in Oklahoma City during the winter of 1977, and tests of different kinds of recessed fixtures in a simulated attic with different kinds of insulation conducted by the Oklahoma City Fire Department and Tinker Air Force Base.

Although not all guard systems were evaluated, the report states that recessed light fixture housings that did not cause fires in the tests were those surrounded with heat sink guards made of 26 gauge metal.

(6) *Requirements of Building Codes and the National Electrical Code.* The Commission is aware that several building codes require spacing between exhaust flues and combustible materials. Also, the National Electrical Code requires spacing between insulation and certain electrical devices.

Based on available information, the Commission believes that cellulose insulation can come into contact with recessed lighting fixtures or exhaust flues by one of the following methods:

(1) Failure of the installer to take preventive measures to keep blown-in or poured-in insulation from contacting heat sources.

(2) After insulation has been installed, displacement of some of the insulation by air currents in the attic to bring the insulation into contact with heat sources.

Cellulose insulation exposed to a source of heat, such as a recessed electrical light fixture, or an exhaust flue, might ignite. The smoldering may continue to spread, causing ignition of other combustibles in the attic area, and may result in flaming combustion. When the cellulose insulation ignites and a fire is started in a residence or dwelling, consumers in the residence or dwelling would be exposed to a risk of injury from burns or smoke inhalation. Once flaming combustion occurs, either directly from the cellulose or through ignition of other combustibles, the fire may spread rapidly and fully involve the attic. A fire of this magnitude produces large amounts of heat and smoke, and if not extinguished may eventually consume much of the structure. The most probable injury scenario involves initiation of smoldering during the late evening hours when lighting and, in proper season, heating are at maximum use, followed by full development of the fire in the early morning hours while the occupants are asleep. Since the smoke and flames of attic fires typically travel upwards to the roof, any smoke alarm device in the living area would not be sensitized until the fire was well advanced.

H. Statutory Findings

Section 27(e) of the Consumer Product Safety Act authorizes the Commission to require manufacturers of consumer products to give notification of performance and technical data related to performance and safety at the time of original purchase to prospective purchasers and to the first purchaser of such product for purposes other than resale, as necessary to carry out the purposes of the act. As provided in section 2(b) of the CPSA (15 U.S.C. 2051(b)) one purpose of the act is to protect the public against unreasonable risks of injury associated with consumer products.

The Commission has considered the available fire incident information and technical information discussed above concerning improperly installed cellulose insulation. This information indicates that there is a serious risk of injury from fire associated with cellulose insulation that is improperly installed too close to the sides and over the top of some recessed electrical light fixtures, or where cellulose insulation is installed too close to the exhaust flues from heat producing devices or apparatus such as furnaces, water heaters, and space heaters. Cellulose insulation that is improperly installed can ignite in a relatively short time as a result of the heat that is trapped by the insulation and builds up around the ignition source. The insulation may ignite even if the insulation complies with the amended interim standard and even if a recommended wattage bulb is used in the recessed electrical light fixture. The ignition of the insulation can lead to flaming combustion of the structure, exposing consumers to the risk of serious injury from fire. The Commission believes that the provisions of Part 1404 will provide persons installing cellulose insulation with information concerning the proper installation of such insulation and should substantially reduce the likelihood of fires associated with improperly installed cellulose insulation. The Commission believes that the labeling requirement would benefit consumers and would significantly reduce the risk of injury from fire associated with improperly installed cellulose insulation. By requiring simple and explicit safety information concerning proper installation to be prominently and conspicuously placed on the insulation container, the Commission will have increased the likelihood that professionals and consumers will install the product in a safe manner.

The Commission also considered the potential economic impact of requiring labeling to eliminate or reduce the risk of injury from fires associated with improperly installed cellulose insulation. The Commission concludes that the regulation would have a minimal impact on the price, utility, and availability of the product; since the regulation would not require manufacturers to alter the product, apart from the labels on the container. In addition, the effective date would allow most manufacturers time to deplete a large number of bags in inventory with non-complying labels and, thereby, significantly limit the temporary expense of hand stick-on labels. (Even if hand stick-on labels are needed, the Commission believes that the expense of these labels is relatively small. As explained earlier, hand stick-on labels would involve a one-time relabeling cost of approximately six to seven cents per bag until the inventory of bags is depleted.) The Commission does not believe that the regulation would have an adverse effect on industry by deterring purchasers from buying the product. The labeling required by the regulation is not so explicit and shocking in its portrayal of the risk of injury as to constitute an unwarranted deterrent to the marketing and availability of cellulose insulation to consumers. In addition, many manufacturers of cellulose insulation are already labeling their bags with some type of warning concerning installation near recessed electrical lights.

As a result of the serious nature of the risks of injury from fire presented by improperly installed cellulose insulation and the minimal impact of the regulation on the price, utility, and availability of the product, the Commission finds that there is an unreasonable risk of injury associated with cellulose insulation that does not comply with the requirements of Part 1404. This unreasonable risk of injury is due to fires that can result where cellulose insulation is improperly installed too close to the sides or over the top of a recessed electrical light fixture or where cellulose insulation is installed too close to the exhaust flues of furnaces, water heaters, space heaters, or other heat-producing devices.

The Commission therefore concludes that, in order to carry out the purpose of the CPSA to protect the public against unreasonable risks of injury, it is necessary to require manufacturers of cellulose insulation to provide the notifications required by Part 1404 as set forth below. The regulation issued below requires manufacturers of cellulose insulation to label the insulation containers with information concerning the flammability hazard associated with cellulose insulation that is improperly installed.

Therefore, under provisions of the Consumer Product Safety Act (Sec. 27(e), Pub. L. 92-573, 86 Stat. 1228; 15 U.S.C. 2076(e), the Commission amends Title 16, Chapter II, of the Code of Federal Regulations by adding to subchapter B a new part 1404, reading as follows:

PART 1404—CELLULOSE INSULATION

Sec.
1404.1 Scope, application, and effective date.
1404.2 Background.
1404.3 Definitions.
1404.4 Requirements to provide performance and technical data by labeling—Notice to purchasers.

Authority.—Sec. 2, 27, 35, Pub. L. 92-573, Pub. L. 95-319; 86 Stat. 1207, 1228; 92 Stat. 386 (15 U.S.C. 2051, 2076, 2082).

§ 1404.1 Scope, application, and effective date.

(a) *Scope.* This Part 1404 establishes a requirement for manufacturers, including importers, of cellulose insulation to notify (1) prospective

purchasers of such products at the time of original purchase and (2) the first purchasers of such products for purposes other than resale (installers and consumers) of ways to avoid the fire hazard that exists where cellulose insulation is installed too close to the sides or over the top of a recessed electrical light fixture or where cellulose insulation is installed too close to the exhaust flues from heat-producing devices or apparatus such as furnaces, water heaters, and space heaters. The notification consists of a warning label on the containers of cellulose insulation.

(b) *Application and effective date.* This rule applies to cellulose insulation that is for sale to consumers for installation in households or residences, as well as insulation that is produced or distributed for installation by professionals in households or residences. Cellulose insulation that is labeled as, marketed, and sold solely for nonresidential installation is not included within the scope of this proceeding. The rule applies to all products manufactured after October 15, 1979.

§ 1404.2 Background.

Based on available fire incident information, engineering analysis of the probable fire scenarios, and laboratory tests, the Consumer Product Safety Commission has determined that fires can occur where cellulose insulation is improperly installed too close to the sides or over the top of recessed electrical light fixtures, or installed too close to the exhaust flues from heat producing devices or apparatus such as furnaces, water heaters, and space heaters. These fires may result in serious injuries or deaths. Presently available information indicates that fires may occur where cellulose insulation is improperly installed even though the cellulose insulation complies with the Commission's amended interim standard for cellulose insulation (16 CFR Part 1209) based on GSA Specification HH-I-515D. The Commission has determined that it is necessary to require labeling to inform persons installing cellulose insulation and consumers in whose homes the insulation is installed of the fire hazard associated with improperly installed cellulose insulation and the method of properly installing the insulation to prevent this hazard. The Commission anticipates that this regulation will accomplish the purpose of helping protect the public against the unreasonable risk of injury associated with improperly installed cellulose insulation.

§ 1404.3 Definitions.

The definitions in section 3 of the Consumer Product Safety Act (15 U.S.C. 2052) apply to this Part 1404.

"Cellulose insulation" is cellulosic fiber, loose fill, thermal insulation that is suitable for blowing or pouring applications.

"Manufacturer" means any person who manufactures or imports a consumer product. The term includes both a person who manufactures the product at the direction of another (such as a packager) and the person at whose direction the product is manufactured (such as the marketer of the brand).

§ 1404.4 Requirements to provide performance and technical data by labeling—Notice to purchasers.

(a) Manufacturers of cellulose insulation shall give notification of performance and technical data related to performance and safety (1) to prospective purchasers of such products at the time of original purchase and (2) to the first purchaser of such products for purposes other than resale in the following manner. Manufacturers of cellulose insulation shall label all containers of cellulose insulation with the following statement, using capital letters as indicated:

CAUTION

POTENTIAL FIRE HAZARD: Keep cellulose insulation at least three inches away from the sides of recessed light fixtures. Do not place insulation over such fixtures so as to entrap heat.

Also keep this insulation away from exhaust flues of furnaces, water heaters, space heaters, or other heat-producing devices.

To be sure that insulation is kept away from light fixtures and flues, use a barrier to permanently maintain clearance around these items. Check with local building or fire officials for guidance on installation and barrier requirements.

REQUEST TO INSTALLER: Remove this label and give it to the consumer at completion of job.

(b) The labeling statement required by § 1404.4(a) shall appear prominently and conspicuously on the container. The word "CAUTION" shall appear in capital letters at least one-fourth inch in height. The words "POTENTIAL FIRE HAZARD" and "REQUEST TO INSTALLER" shall appear in capital letters at least three-sixteenths inch in height. The remainder of the statement shall appear in capital letters at least three-sixteenths inch in height, with lower case letters in corresponding proportion but at least one-eighth inch in height. The labeling statement shall be enclosed within a rectangle formed with lines at least one-sixteenth inch in width. The labeling statement shall be printed with legible type in a color which contrasts with the background on which the statement is printed.

(c) To meet this requirement, manufacturers may use any type of label, including one which is pressure sensitive or glued-on, provided the label is made in such a manner that it will remain attached to the container for the expected time interval between the manufacture of the product and its installation.

Dated: July 2, 1979.

Sadye E. Dunn,

Secretary, Consumer Product Safety Commission.

[FR Doc. 79-20770 Filed 7-5-79; 8:45 am]

BILLING CODE 6355-01-M

Federal Register

Friday
July 6, 1979

Part VI

Department of Agriculture

Food and Nutrition Service

National School Lunch Program and School Breakfast Program

DEPARTMENT OF AGRICULTURE

Food and Nutrition Service

[7 CFR Parts 210 and 220]

National School Lunch Program and School Breakfast Program

AGENCY: Food and Nutrition Service, USDA.

ACTION: Proposed Rule.

SUMMARY: This proposed rule would amend the regulations for Part 210, National School Lunch Program, and Part 220, School Breakfast Program, to implement the amendment of section 10 of the Child Nutrition Act of 1966 by section 17 of Public Law 95–166, respecting the sale of foods in competition with meals served under the National School Lunch Program and the School Breakfast Program. This proposed rule would establish minimum nutritional standards for foods sold in competition with meals served in the School Breakfast and National School Lunch Programs. It would identify foods of minimal nutritional value and would restrict their sale until after the last lunch period. In publishing this proposed rule, we are not suggesting that these foods should never be eaten by students. Rather, we are restricting their sale during certain hours of the school day in order to preserve the nutritional integrity of federally subsidized school meals.

DATES: To be assured of consideration comments must be received on or before September 6, 1979.

ADDRESS: Comments should be sent to Margaret O'K. Glavin, Director, School Programs Division, USDA, FNS, Washington, D.C. 20250, (202) 447–8130. Comments will be available for review and inspection during regular business hours (8:30 a.m. to 5:00 p.m.) Monday through Friday in Room 4300 Auditors Building at the address as listed above.

FOR FURTHER INFORMATION CONTACT: Margaret O'K. Glavin, Director, School Programs Division, USDA, FNS, Washington, D.C. 20250, (202) 447–8130.

SUPPLEMENTARY INFORMATION:

Table of Contents of Preamble

I. Introduction.
II. Background.
A. History of Competitive Foods Regulation Under 1970 and 1972 Amendments.
B. Legislative History of the 1977 Amendment.
C. Summary of Public Comments.
D. Data Collection.
III. Development of the Second Proposed Rule.
A. Framework of the Rule.
B. Choosing a Method of Analysis.
1. Food Composition.
2. Type A Meal Pattern.
3. Nutrient Analysis.
C. Application of a Nutrient Analysis Approach In a Competitive Foods Rule.
1. Nutrients for Analysis.
2. Units of Measurement.
3. Standard of Reference.
4. Level of Nutrients.
D. Identification of Foods of Minimal Nutritional Value.
IV. Implementation Issues.
V. Request for Comments on the Proposed Rule.

Introduction

Congress has placed responsibility for administration of the School Breakfast Program and the National School Lunch Program in the Department of Agriculture. In carrying out this responsibility we have established various minimum standards for local school food authorities wishing to participate in the federal school food programs. These standards, such as the Type A lunch requirements, are imposed as conditions of receiving federal funds and are designed to ensure that those funds are used to promote good nutrition among students.

When Congress enacted the 1977 competitive foods amendment to the Child Nutrition Act of 1966, it authorized the Secretary to regulate the sale of competitive foods in schools participating in federal food programs. The rule proposed in this notice would establish minimum nutritional standards for foods sold in competition with meals served in the School Breakfast and National School Lunch Programs. It would identify foods of minimal nutritional value and would restrict their sale until after the last lunch period. In publishing this proposed rule, we are not suggesting that these foods should never be eaten by students. Rather, we are restricting their sale during certain hours of the school day in order to preserve the nutritional integrity of federally subsidized school meals.

II. Background

On October 10, 1977, Congress enacted Public Law 95–166. Section 17 of Public Law 95–166 amended Section 10 of the Child Nutrition Act of 1966 to restore to the Secretary of Agriculture the authority to regulate the sale of competitive foods in schools participating in the National School Lunch Program and/or the School Breakfast Program. These rulemaking proceedings were initiated to implement this "competitive foods amendment".

A competitive food is defined as any food sold in competition with the federally subsidized school meals in schools which participate in the National School Lunch Program (42 U.S.C. 1752 et seq) or the School Breakfast Program (42 U.S.C. 1773), or both. Such foods may be available in alternate or a la carte lunch lines, or from vending machines or snack counters. Competitive foods presently sold in schools include items of varied nutritional value such as soups, sandwiches, fruit, candies, chips, and soda pop.

A. History of Competitive Foods Regulation

Prior to 1977, the sale of competitive foods in schools had twice engaged the attention of Congress. In 1970, the concerns of numerous public organizations and local governments about the increasing variety and quantity of foods being sold in competition with the school feeding programs led to the first competitive foods amendment to Section 10 of the Child Nutrition Act of 1966 (Public Law 91–248).

The 1970 competitive foods amendment provided statutory authority for the Secretary of Agriculture to regulate foods sold in competition with the nonprofit school feeding programs authorized under the Child Nutrition Act and the National School Lunch Act. Regulations implementing the 1970 amendment allowed the competitive sale of only those foods which either fulfilled a Type A meal pattern requirement or were served along with the Type A lunch.[1] Thus, the effect of the 1970 rule was to allow any food served as part of a school lunch also to be sold competitively. For example, under this rule, if a school sometimes served cake as dessert with the Type A meal, cake could then be sold as a competitive food. Because of wide local discretion in the choice of foods served, the result of this rule in many places was that only soft drinks and some candies—which were rarely served along with the school meals—were disallowed.

While the impact of the 1970 rule was thus limited, it nonetheless aroused controversy, and some groups advocated the transfer to State and local education agencies of the Secretary's authority to regulate competitive foods.

Section 10 was again amended in 1972 by Public Law 92–433. The 1972 amendment restricted the Secretary's regulatory powers under the statute by providing that Federal regulations could not prohibit the sale of competitive foods if the proceeds of such sale

accrued to the schools or approved student organizations. Thus, the 1972 amendment placed authority for the regulation of competitive foods with State agencies and local School Food Authorities. Various types of competitive foods rules were developed by State and local bodies in the years that followed.

Nationwide, the regulation of the sale of competitive foods under the 1972 amendment was unsystematic. Approved foods varied among localities, and many jurisdictions developed no competitive foods regulation at all. By 1977, owing to increasing concerns about the quality of children's diets, there was growing dissatisfaction with the results of the 1972 competitive foods provision. Nutritionists, parents, school administrators, and others urged legislation restoring regulatory authority to the Secretary of Agriculture. The Department also supported such legislation.

B. Legislative History of 1977 Amendment

In 1977 Congress again amended Section 10 to restore to the Secretary authority to regulate the sale of competitive foods. The Department did not propose this provision but supported its passage. Section 10 of the Child Nutrition Act, as amended, now reads, "The Secretary shall prescribe regulations as he may deem necessary to carry out this Act and the National School Lunch Act, including regulations relating to the service of food in participating schools and service institutions in competition with the program authorized under this Act and the National School Lunch Act. Such regulations shall not prohibit the sale of competitive foods approved by the Secretary in food service facilities or areas during the time of service of food under this Act or the National School Lunch Act if the proceeds from the sales of such foods will inure to the benefit of the schools or of organizations of students approved by the school. . . ."

In developing regulations to implement this statutory directive, the Department used the legislative history of the amendment as a guide to Congressional intent. As stated by the Senate Committee on Agriculture, Nutrition, and Forestry (S. Rep. 95-277, 95th Congress, 1st Session), the 1977 competitive foods amendment was formulated because, "It is counterproductive for the Federal Government to attempt to provide nutritious, health-supporting meals through child nutrition programs and at the same time, permit foods of low nutritional value to compete directly with nutritious meals. S. 1420 would permit the sale of nutritious foods, such as fruits, vegetables, dairy products, pure fruit and vegetable juices and other items determined to be nutritious. Restoration to the Secretary of the regulatory authority over competitive foods will help point out the role of good nutrition in health care, and help instill good future eating habits in children."

In their debates on the competitive foods amendment, legislators expressed several concerns. Among them were the following:

1. Sale of competitive foods in the schools may adversely affect participation in the school lunch programs, increase plate waste, and contradict the nutrition education efforts carried out in the schools. (Remarks of Senator McGovern (122 Cong. Rec., S11187 (June 30, 1977)); Senator Dole (122 Cong. Rec., S11191 (June 30, 1977)); Representative Perkins (122 Cong. Rec., H11669 (October 27, 1977)).)

2. Certain health problems in the population such as dental caries, obesity, and cardio-vascular disease may be related to poor nutrition. (Remarks of Senator Humphrey (122 Cong. Rec. S. 18006 (October 27, 1977)); Senator Dole (122 Cong. Rec. S. 11191. S 11200 (June 30, 1977)).

3. Children should be encouraged to consume nutritious foods both through nutrition education and through a limitation on the sale of "non-nutritious" or "low nutrition" foods in the schools. (Remarks of Senator Javits (122 Cong. Rec. S. 11205, (June 30, 1977)); Representative Miller (122 Cong. Rec. H 11673, (October 27, 1977)).

The Conference report (S. Rep. 95-504. H. Rep. 95-708) indicates that the Congressional intent in adopting the competitive foods amendment was to empower the Secretary to regulate, "only those foods that do not make a positive nutritional contribution in terms of their overall impact on children's diets and dietary habits." As former Congressman Albert Quie pointed out in floor debate on the Conference Committee version, the amendment provides for "a limited power to be used sparingly to encourage the sound nutrition and nutritional habits of school children." (122 Cong. Rec. H. 11674. 11675 (October 27, 1977)).

After the passage of Public Law 95-166, the Department initiated rulemaking proceedings to implement the 1977 competitive foods amendment. On April 25, 1978 (43 FR 17476), we published a proposed rule which would have restricted the sale of four categories of competitive foods—candy, soda water, frozen desserts, and chewing gum—in schools from the beginning of the school day until after the last lunch period. These categories were selected because the foods "[did] not make a positive nutritional contribution in terms of their overall impact on children's diets, dietary habits and appetites."

Over 2100 public comments were submitted in response to the April 25 proposal. While many commentors supported the proposal, others raised questions concerning several aspects of our decision to restrict the sale of the four specified categories of foods. Some questioned the adequacy of the nutritional criteria or standards used to select these four food categories. Other commentors criticized as arbitrary our proposal to regulate only foods in the four cited categories while allowing other nutritionally similar foods to be sold without restriction.

After analysis of the comments, the Department determined that additional consideration of the competitive foods rule was necessary. To insure adequate public participation as required by Executive Order 12044, we, on December 15, 1978 (43 FR 58780), withdrew the April 25 proposal and announced the intention to hold a series of three public meetings on the competitive foods issue and to solicit additional written comment before formulating a new proposal. The December 15 notice included a background paper on competitive foods which solicited comments on various methods of analysis of foods that could be used in a competitive foods rule and on a variety of related topics.

The three public meetings were held in Nashville, Detroit, and Seattle on January 30, February 6, and February 13, 1979, respectively. Attendance by parents, school officials, students, industry representatives, nutritionists, and others indicated considerable continuing interest in the competitive foods issue. In all, 200 witnesses presented oral testimony. In addition, 2,136 written comments were submitted.

C. Summary of Public Comments

During comment periods following both the April 25 proposal and the December 15 announcement the Department received more than 4,200 comments from students, parents, business and industry, teachers, school administrators, nutritionists, dentists, other medical professionals, and other concerned citizens. The overwhelming majority of the comments favored a rule which restricted the sale of foods in the categories named in the April 1978 proposal. Many commentors suggested

additional categories of foods they believed should be restricted by the rule. Highlights from these comments follow.

Approximately eighty percent of the comments favored the Department's April 1978 proposal. Of those, approximately 40 percent suggested expanding the proposal to restrict more food items and/or to extend the restrictions beyond the last lunch period of the school day. Correspondence from dietitians, nutritionists, nurses, and doctors expressed concerns similar to those articulated by the American Heart Association, which suggested that the April 1978 proposal was too limited and should include other competitive foods which tend to be high in sugar, fat and/or salt. In addition, that organization indicated its strong belief that school-age children should not be encouraged to consume such food items and that their availability should be limited.

Many commentors pointed out that the competitive foods rule was closely related to the new emphasis on nutrition education in the schools. They urged that education must extend beyond classroom activities and be integrated into the total school environment. Many stated that to teach proper eating habits in the classroom while allowing the sale of foods of minimal nutritional value elsewhere in the school is neither educational nor conducive to the development of good eating habits.

A number of commentors raised the issue of whether school revenues would be reduced because of the restrictions on the sale of some competitive foods. Commentors who favored a competitive foods rule took the position that this was not an important issue. Testimony in Nashville and some written comments offered examples of school districts that had switched from selling foods of low nutritional value to selling other products and had not only maintained but increased their revenues. A number of commentors urged that the rule be extended to one hour after the last lunch period, or to the entire school day.

Less than twenty percent of the commentors opposed the original proposal. Most of these objected to promulgation of any Federal rule on competitive foods, expressing concern that prtricipation in the school lunch programs would diminish if competitive foods were regulated. They predicted that students would leave school grounds to get the foods they wanted. A comment from a superintendent of public schools in Michigan typifies this concern. The superintendent noted that, "should students be denied (certain competitive foods) they will leave for downtown and we have an increasing number of students who return who have come under the influence of drugs or alcohol." Other commentors, however, indicated that the proposed rule would be likely to increase participation in the school lunch program especially among older children who are more likely to consume competitive foods if they are available. The food service director of a large Maryland school district reported an 11 percent overall increase in the number of lunches served in the year following local imposition of restrictions on the sale of minimally nutritious foods in the schools. Increases were the largest in junior and senior high schools.

From a health perspective, some commentors pointed to the possible benefits from consumption of foods high in sugar. For example, Hershey Foods commented that, "any policy directed at reducing sugar consumption may well prove detrimental to health * * * consumption may be directed from sugar to calorically dense fats."

Other commentors opposing the proposal stated that impact on health should not be the foremost consideration in evaluation of the proposed rule.

The representative of the National Confectioners Association and the National Candy Wholesalers Association testified that, "* * * basically our products are not sold or consumed to satisfy fundamental nutritional needs. They are sold as and acquired for a source of enjoyment and pleasure * * * candy is happiness."

Comments submitted on behalf of the Hershey Foods Corporation stated that the proposed rule was inadequate because it accorded different treatment to foods that were similar in composition or nutritional value. Hershey Foods suggested that an analysis of foods on a nutrient standard was a feasible approach for the rule. Alternatively, Hershey suggested that rather than restricting the sale of certain items, the Department should require nutrition labeling which would permit students to make their own determinations of which foods were least nutritious.

Few other comments were received from either supporters or opponents of the proposed rule concerning the preciser method of analysis of foods which the Department should use as a basis for the competitive foods rule.

D. Data Collection

In developing the second proposed rule, the Department not only reviewed public comments but also explored other sources of information. The activities undertaken by the Department include the following:

1. Nutritionists in the Department reviewed current studies and publications dealing with associations between diet and disease. The review focused in part on the overconsumption of the food components sugar, fat and salt, as it relates to current public health concerns. A summary of the information in these studies appears in the Federal Register notice of December 15, 1978. The Department concluded on the basis of this review that a significant portion of the population has nutritional problems resulting from overconsumption and poor food choices.

2. Nutritionists in the Department reviewed current studies and publications which deal with nutritional status of children in the United States and with their dietary practices. Studies indicate that some children consume less than the recommended level of some nutrients. The Ten State Nutrition Survey conducted by the Department of Health, Education and Welfare (HEW) [2] reports that iron deficiency is a widespread problem in the population. Data from the Health and Nutrition Examination Survey (HANES) of HEW [3] show that intake of iron is low for a significant proportion of children aged 6–17. In the Bogalusa Heart Study, [4] a recent study of the dietary and cardiovascular status of rural school age children funded by the National Institutes of Health, at least one-third of all children studied consumed less than two-thirds of the recommended dietary allowance (RDA) of vitamin A, ascorbic acid, and niacin for their age and sex.

In addition to nutrient consumption, calorie consumption is also of concern in assessing the nutritional status of children. The Bogalusa Heart Study reported that 19% of the boys and 25% of the girls consumed less than two-thirds of the RDA for calories for their age and sex. [5] The findings of the HANES data indicated that many children consumed less than recommended levels of calories, but the report also cautioned that calorie intake cannot be analyzed meaningfully unless it is related to activity and weight status. [6] Although these studies have indicated that calorie consumption among school children is at times less than the RDA's, it may be that the established standards are too high. It is widely recognized that there are significant variations in energy demands from individual to individual, particularly among children.

The most appropriate way to assess whether caloric needs are being met is to examine the physiologic status of

children. If there are significant levels of underweight or growth retardation, it would indicate possible caloric deficiencies. However, there are no data showing significant levels of underweight or growth inadequacy among school aged children in the United States. Physical status findings from the HANES survey and other major surveys of the growth and health of U.S. children reveal that underweight and stunted growth are not observed in a high proportion of children in the United States. [7] In fact, caloric excess leading to obesity is a greater concern than stunted growth.

The Ten State Nutrition Survey found that 9 to 39 percent of adolescents were obese. [8] There is particular concern over childhood obesity because of the likelihood that the pattern, once set, will persist into adulthood. Parental obesity and obesity during childhood appear to be major predictors of obesity in an adult. Thus, there is substantial reason to attempt to prevent the onset of obesity in children.

These findings on the health and nutritional status of children indicate that overconsumption of calories may be a problem at the same time that nutrient intake is inadequate.

3. The Department examined the food consumption patterns of children. Studies show that snacking makes a significant contribution to the total calories consumed daily by children. Ninety-eight percent of the children interviewed in the Bogalusa Heart Study consumed some snacks. Snacks contributed one-third (34 percent) of the daily calories in these children's diets, more than the contribution of breakfast (17 percent of calories), lunch (23 percent of calories) or dinner (29 percent of calories). For about one-third of the Bogalusa children (30 percent), snacks contributed between 40–70 percent of their total calories. Snacks sometimes took the place of meals. For some children an almost hourly snacking pattern was apparent. Although snacks contributed *more* total calories to diets than any other single factor, they contributed *less* to nutrient levels than did meals.

Snacks provided calories mainly from fat and sucrose. In the Bogalusa study they provided 31% of the fat and 59% of the sucrose in children's diets. The foods which contributed the most sucrose to the diets were beverages (37%) and candy (25%). Reports summarizing the food consumption profiles of individuals in different age groups issued by HANES show that sweetened beverages and candy are more frequently consumed by those aged 1 to 17 than any other age group. [9] In the Bogalusa Study sucrose contributed 18% of the total calories consumed by children. [10] Sucrose and othe sugars are a source of calories but they offer little else nutritionally. Data from the Ten State Survey indicated that there is a high prevalence of dental caries among children in the United States.

A recent report "Evaluation of the Health Aspects of Sucrose as a Food Ingredient," prepared for HEW by the Federation of American Societies for Experimental Biology, concludes that, "Reasonable evidence exists that sucrose is a contributor to the formation of dental caries when used at the levels that are now current and in the manner practiced." The report also states that various factors affect the cariogenicity of sucrose. Among them is the form in which the sucrose is eaten and the frequency of exposure. [11]

The American Society for Clinical Nutrition sponsored a recent symposium titled "Can Diseases of Overconsumption be Prevented by Dietary Changes? A critique of the evidence." Participants in the symposium concluded that sucrose, especially when consumed frequently throughout the day, is the dietary component that is most conducive to oral bacterial infection and caries. [12] It has been demonstrated that consumption of snack-type foods between meals has a significant effect on the frequency and severity of dental caries. [13]

In light of the findings of the studies described, the Department concluded that concern about the quality of children's diets is appropriate. Additionaly, these studies demonstrate that there is appropriate. Additionally, these studies demonstrate that there is reason to be concerned about the kind of snacks that children eat. Since snacks contribute a significant proportion of the calories that children consume, it is important that snacks contain nutrients as well as calories if children's diets are to be nutritionally adequate.

4. We determined what food composition information that could be used in evaluating competitive foods is currently available. The Department's Consumer Food and Economics Institute (CFEI) is the main source of data. Data published in the Department's Agriculture Handbooks 8, 456, and 72 Home and Garden Bulletin as well as more current unpublished data from CFEI are available. The Department was represented at the Fourth National Nutition Data Bank Conference at Case Western Reserve University where summaries of available data were presented. We concluded that while some information about food composition is available, the data are limited. An additional problem is the foods in the data bank are identified generically rather than by brand name.

5. Nutrient density analysis is one method for evaluating foods that has been proposed in the literature. We convened a meeting of USDA nutritionists and nutrition experts who work outside the Department and who are particularly knowledgeable about the subject of nutrient density. The participants made general recommendations concerning the possible use of a nutrient density approach in the competitive foods rule and specific suggestions about nutrient density calculations that the Department planned to request from several universities.

6. The Department contracted with three universities, Colorado State University, Case Western Reserve University and Utah State University, to secure nutrient density data on a wide array of foods. We specified the formula to be used for the calculations and requested that nutrient values be calculated for each of 15 nutrients: protein, vitamin A, vitamin D, vitamin E, vitamin C, folacin, niacin, riboflavin, thiamin, vitamin B_6, vitamin B_{12}, calcium, iron, magnesium and zinc. Colorado State University provided data on a total of 2,612 individual foods and food combinations that were served in roughly 500 sample school lunches. Complete information was supplied for only eight nutrients: protein, vitamin A, vitamin C, niacin, riboflavin, thiamin, calcium and iron. Case Western Reserve University provided some information for each of the 15 specified nutrients. Their computerized data file contains approximately 2,300 food items and recipes. Utah State University analyzed 2,658 items which were described both generically and by brand name. They provided partial information for 10 nutrients; protein, vitamin A, vitamin C, niacin, riboflavin, thiamin, calcium, iron, vitamin B_6 and vitamin B_{12}.

7. The Department consulted with other government agencies to compare their approaches to similar health and nutrition-related problems. Specifically, staff members of the Department met with staff of the Department of Health, Education and Welfare (HEW) and the Federal Trade Commission (FTC) who are involved with issues similar of those raised by the competitive foods rule. FTC shared some calculations that had been performed for them by Case Western Reserve University indicating the levels of nutrients in individual

foods. Department nutritionists examined the data that were available from the FTC on nutrient levels in snacks and dessert foods.

III. Development of the Second Proposed Rule

A. Framework of the Rule

Underlying and motivating the Department's efforts to design a competitive foods rule is the recognition that all children need nutrients in appropriate balance with calories in order to maintain good health and that the school food programs provide an effective vehicle both for improving the diets of students and establishing good eating habits among students. The examination of data concerning the nutritional and health status of children and their food consumption patterns helped us to describe the population that will be directly affected by the competitive foods rule and to identify the specific nutritional issues that the rule should address. It has been demonstrated that some nutrients are lacking in the diets of some children and that at the same time obesity is a problem in the school-age population. For all children, an appropriate balance of nutrients to calories in the diet is essential to health maintenance. The Department, therefore, determined that it was very important for the rule to address the relationship of nutrients in the diet to calories in the diet. The prevalence of dental caries in the population made the amount of sucrose in children's diets another issue of particular concern in designing the rule.

After conducting a review of the available data, the Department concluded that the competitive foods rule should be designed to accomplish two essential objectives:

1. The rule must identify foods which contribute such low amounts of nutrients as to be considered of "minimal nutritional value".

2. The rule must identify the nutritive contribution of foods in relation to their calorie content.

A rule which focuses on the relationship of nutrients to calories is important in achieving an appropriate balance needed to maintain good health for all children. The rule also for foods will not only address the problems of nutrient deficiencies and excessive calorie consumption in children's diets, but will also address health problems that may be caused by the overconsumption of foods that contain large proportions of sugar or fat. Sugar provides calories but little else nutritionally. Foods that contain large amounts of fat, the most concentrated form of food energy, provide relatively more calories in relation to nutrients than other foods. Thus, a rule that distinguishes among foods on the basis of their ratio of nutrients to calories will also take into account the levels of sugar and fat in various foods.

B. Choosing a Method of Analysis

One of the most important and difficult tasks in designing the competitive foods rule was selecting a method for analyzing foods. The complexity of this task was multiplied by inherent tensions between the two basic requirements of this rule. First, the rule must be sufficiently sophisticated to distinguish objectively on a nutritional basis among the vast number of foods available for sale as competitive foods. Second, the rule must be sufficiently simple to be administratively workable for the thousands of State agencies and local school administrators who will be charged with the duty of administering the final rule.

Three different methods of analysis were presented to the public in the December 15 notice. Comments were solicited concerning the three methods, as well as any additional methods the public could suggest. The three methods are discussed below.

1. *Food Composition.*—An analysis of foods under the food composition approach would assess the levels of ingredients such as sugar, fat, or salt contained in foods. Under this approach, the sale of any food containing more than a specified amount of sugar, fat, or salt would be restricted until after the last lunch period of the school day.

The advantage of a food composition standard is that it addresses many of the concerns related to the strong associations between the overconsumption of certain food components and current public health problems. The practical application of the standard, however, is difficult. One reason for this is the lack of adequate food composition data. Current knowledge about the total sugar available in individual foods is in general scanty even though sugar content data are available for some types of foods. The Department must be able to apply the selected standard to the vast array of available foods. Therefore, a substantially broader data base would be necessary before it would be feasible for the Department to utilize a food composition approach in the competitive foods rule.

A second problem is that while the reduction of sugar, fat and salt in the whole diet has been frequently recommended, little work has been done to establish appropriate levels for these components in individual foods. To utilize a food composition standard correctly, maximum levels of target ingredients in individual foods would have to be established. This is difficult because of the lack of available data and controversial because an appropriate sugar, fat or salt level for one category of foods might be different than that for another category. For example, an appropriate level of fat in meats is likely to be higher than that in vegetables.

The Department believes that these practical and substantive disadvantages of the food composition approach outweigh its advantages. This approach therefore would be inappropriate at this time as a basis for the proposed rule.

2. *Type A Meal Pattern.*—In order to qualify for Federal reimbursement under the National School Lunch Program, each school lunch must satisfy the Type A meal pattern requirements. That is, specified amounts of four components—meat or meat alternates (including cheese, dry beans or peas, eggs or peanut butter), vegetable or fruit, bread or bread alternates (including muffins, taco shells, etc.) and fluid milk—must be present in each lunch. The Type A meal pattern is a minimum standard upon which local school food programs can build. It is designed to insure that each meal provides aproximately one-third of the Recommended Dietary Allowances (RDA) of nutrients for 10- to 12-year-old children as established by the National Research Council of the National Academy of Sciences. Other items may be served as part of a school lunch, but will not be counted toward meeting the Type A requirements.

An analysis of foods under the Type A meal pattern approach would involve a simple test. Any food which satisfied a Type A meal pattern requirement would automatically be an approved competitive food, and could be sold at any time during the school day. Other competitive foods could be sold only during certain hours (after the last lunch period).

If this approach were used as the standard for the competitive foods rule, an apple would be approved for competitive sale because it is a food that satisfies the fruit requirement of the Type A meal pattern. Peanuts, which are not presently counted as satisfying any of the four requirements of the Type A meal pattern, would not be approved.

A modification of the Type A meal pattern standard would approve for competitive sale throughout the school day all foods sold as part of a Type A

lunch, including those which meet the meal pattern requirements as well as those which are served along with the required foods at the school's discretion. Under this approach, if peanuts were served in addition to the required foods as part of the lunch meal, they would be approved for competitive sale. The practical effect of this approach would be to limit the sale only of those items that local schools do not offer children as part of the lunch meal. A local school district might elect not to serve certain foods at lunch for nutritional reasons or for purely economic reasons. This approach was used in regulations under the 1970 competitive foods amendment and has the effect of curtailing competitive sales of soft drinks and most candy.

Many commentors on the December 15 notice and persons testifying at the public hearings favored the Type A approach as a basis for the proposed rule. They noted that this standard is ideally suited for fulfilling the Congressional mandate to protect the nutritional integrity of the Type A meal. Their reasoning is that foods which already meet the Type A meal pattern requirements are assumed to be consistent with Congressional intent and their sale as competitive foods should be approved.

An advantage of a rule based on this approach is that it is easily administered. School officials are familiar with the Type A requirements and could easily determine which foods would be approved for competitive sale.

The disadvantage of using the Type A meal pattern approach is that it does not directly address one of the essential tasks of this rule. The Type A approach does not offer a means by which to assess the nutritional contribution of individual foods. As stated earlier, the Type A meal pattern is designed to ensure that the lunch will provide approximately one-third of the RDA for a 10 to 12 year old child. The Type A pattern sets no requirements concerning the amount of nutrients that each individual component of the meal must contribute. Rather, the Type A pattern is designed so that the meal components taken together achieve a specified nutritional objective; the value of each individual food is considered as it relates to this objective for the complete meal. Thus, while the Type A pattern may be a sound nutritional foundation for planning meals, it is not suitable for identifying individual foods of limited nutritional value.

Any method of analysis of foods developed for use as a standard in the competitive foods rule must assess the relative nutritional contribution of individual foods. A method based on the Type A pattern is inadequate to this task. Therefore, despite the favorable public comments, the Department has determined that the Type A mean pattern approach is not an appropriate basis for a proposed rule.

3. *Nutrient Analysis.*—The third proposed approach, nutrient analysis, is broadly defined as any analysis method which measures levels of nutrients in units of foods. A rule based on this approach would specify ways of assessing the nutrient content of individual foods. A problem with food assessment based exclusively on nutrient content, however, is that the levels of components such as sugar and fat in the foods would not be taken into account.

Nutrient density analysis is a specific type of nutrient analysis. It measures a food's nutrient content in relation to its energy or caloric value. This approach addresses the essential objectives which the Department has defined for the competitive foods rule. Foods containing few nutrients as well as foods with calorie contents that are very high in relation to the nutrients that they provide will have lower values in a nutrient density analysis than foods which contain high levels of nutrients or foods with a high proportion of nutrients relative to calories.

The principal difficulties in using a nutrient analysis approach are the complexities involved in translating the concept into a workable formula to be applied in a competitive foods rule. The Department believes, however, that it is possible to develop such a formula.

Another potential problem with this approach is that it might encourage manufacturers to fortify foods so that they would meet the nutritional requirements of the rule. We are aware of and we share the concern of nutrition experts about the practice of fortifying foods to simply increase their level of nutrients. At specified high levels some nutrients have a toxic effect. In addition, many nutritionists believe that for the average person, nutritional needs can and should be satisfied by consumption of a wide variety of foods supplying nutrients rather than by reliance on a few foods that are highly fortified.[14]

Despite this problem, we believe that a nutrient analysis approach is the best of three considered. It makes possible the identification of foods which contribute such low amounts of nutrients as to be considered of "minimal nutritional value" as well as the determination of the nutritive contribution of foods in relation to their calorie content. We do not intend this rule to encourage fortification of foods of minimal nutritional value as defined in §§ 210.2(h-1) and 220.2(i-1).

C. Application of a Nutrient Analysis Approach in a Competitive Foods Rule

The translation of the nutrient analysis approach into a workable formula to be applied to individual foods raised several important questions including which nutrients to assess, what units of measurement to use, what standard of reference to use and what value to select as an acceptable level of nutrients. These questions are discussed below.

1. *Nutrients for analysis.*—Roughly 45 vitamins, minerals and other elements which play an essential role in human nutrition have been identified by nutritional scientists. The precise function and necessary levels of many of these nutrients have not yet been identified. The Food and Nutrition Board of the National Academy of Sciences, National Research Council has established Recommended Dietary Allowances (RDA) for various age groups for the following nutrients: protein, vitamin A, vitamin D, vitamin E, ascorbic acid, folacin, niacin, riboflavin, thiamin, vitamin B_6, vitamin B_{12}, calcium, phosphorus, iodine, iron, magnesium and zinc. To establish the RDA's the Food and Nutrition Board must make estimates based on available information. RDA's have been established for these 17 nutrients because scientific data are available to estimate the human requirements for them. The establishment of RDA's for the other nutrients will be possible only after futher research in this area has been conducted. Considerable time and expense will be required to obtain this information.

Food composition information is most widely available for 8 of these 17 nutrients: protein, vitamin A, ascorbic acid, niacin, riboflavin, thiamin, calcium and iron. Because deficiencies in these 8 nutrients have been associated historically with public health problems, these nutrients have been the ones most commonly studied by researchers. Thus, the technology needed to assess their presence in foods is well established and relatively inexpensive. At present, research related to the levels of other nutrients contained in foods is being undertaken by scientists but it will be some time before the information is available in a useable form.

In making a decision concerning which nutrients to analyze, the Department not only considered the availability of information and

technology but also canvassed the relevant activities of other government agencies. In its rule on nutrition labeling, the Food and Drug Administration (FDA) determined that if a manufacturer chooses to state the nutritional content of a food, the label must contain the percentage of the USRDA for each of the 8 commonly analyzed nutrients listed above. Certain other nutrients (vitamin D, vitamin E, vitamin B, Folic Acid, vitamin B_{12}, phosphorus, iodine, magnesium, zinc, copper, biotin, pantothenic acid) must be listed only if they are added to the food. If naturally occuring, the labeling of these additional nutrients is optional.

A primary requirement of any standard chosen for the competitive foods rule is that is be applicable to all foods. In reviewing the availability of food composition data the Department determined that complete composition information is generally available for the 8 most commonly analyzed nutrients but that large gaps exist in the data for other nutrients. As the state of the science of nutritional analysis of foods advances, it will be possible to assess the presence and importance of a greater array of nutrients. However, at this time, for the purposes of this rule, we have concluded that analysis of the 8 nutrients will enable us to make a meaningful and accurate decision on the nutritional contribution made by different foods. Therefore, the nutrient standard proposed by this rule measures the quantities of protein, vitamin A, ascorbic acid, niacin, riboflavin, thiamin, calcium and iron present in foods.

2. *Units of measurement.*—The Department has determined that individual foods will be evaluated on the basis of two measurements: (1) nutrients in a 100-calorie portion of the food and (2) nutrients in an average portion of the food as it is commonly served.

Both measures can be used to determine the nutrient density of the food but they serve distinct purposes in the rule. The 100-calorie measure makes possible a relative comparison of all foods. The analysis of nutrients per average serving permits a more realistic assessment of the nutritional contribution of foods as they are commonly consumed. (The FDA, in its nutrition labeling rule, requires that values be reported on the basis of serving size.) By coupling the 100-calorie measure and the per serving measure, we will be able to evaluate and compare food on a theoretical, standardized basis and to assess the nutritional contribution of foods as they are commonly consumed by students in school.

Artificially sweetened foods present a special problem. They contain few calories (and few nutrients), but may nevertheless satisfy a child's appetite and may thus replace other foods in a child's diet which would provide more nutrients. We therefore propose to analyze artificially sweetened foods on the basis of serving size alone. Because the balance of calories to nutrients has been intentionally altered in these processed foods, the consumption of 100 calories of such products represents unrealistically large quantities. For example, to measure an artificially sweetened soda on a per-100-calorie basis would require an assessment of 3 to 10 gallons of soda depending on how many calories the soda contained. Since it is not meaningful to compare artificially sweetened foods with other foods on a 100-calorie basis, we have concluded that artificially sweetened foods will be analyzed solely on the basis of serving size.

Moreover, since we share the concerns of the scientific community about the health risks resulting from the use of some non-nutritive sweeteners, we are reluctant to adopt a standard that, while restricting the sale of ordinary soft drinks, would permit the sale of soft drinks artificially sweetened with saccharin. In considering this issue we reviewed a report issued by the Committee for Study on Saccharin and Food Safety Policy which was formed by the National Academy of Sciences in response to Congressional mandate.[15] In summarizing the facts which should be considered in the formulation of a policy concerning saccharin the committee stated, "Whether as an initiator or promoter, saccharin is a potential carcinogen in humans, but one of currently uncertain consequence and potency in comparison with other carcinogens. In any case, the large number of persons exposed to saccharin justifies serious continued public health concern." The report further states, "The observation that saccharin use among young children may be increasing suggests that public health officials should take a prudent course of action."

These recommendations strengthened our view that it is reasonable to make distinctions between naturally and artificially sweetened products, particularly in a regulation that will affect children.

3. *Standard of reference.*—In performing nutrient density calculations the Department relied on the U.S. Recommended Daily Allowance (USRDA) adopted from the most current Recommended Dietary Allowances (RDA) established in 1974 by the Food and Nutrition Board, National Academy of Sciences, National Research Council. This standard is the one used by FDA for nutrition labeling.

4. *Level of Nutrients.*—Using the nutrient analysis approach as the basis for the proposed rule, it was necessary for the Department to select a minimum level of nutrients for foods acceptable for competitive sale. Sale of foods not containing this minimum level would be restricted during certain hours in schools.

The Department is proposing that foods containing less than *5 percent* of the USRDA for all 8 of the specified nutrients per 100 calories *and* per serving be considered foods of minimal nutritional value and that their sale in schools be permitted only during certain hours of the school day. In determining that a 5% level would be used for this purpose the Department turned, once again, to other federal agencies for guidance.

The FDA, in its nutrition labeling regulations, allows a manufacturer to claim that a food is a "significant source" of a particular nutrient if that nutrient is present in a serving of food at a level equal to or in excess of 10% of the USRDA for that nutrient. The Department reasoned that if a food which contains 10% of a nutrient may be termed a "significant source" of that nutrient, something less than 10% would be an appropriate test for this rule.

When the FDA developed its proposed rule on labeling standards, industry officials opposed the requirement that each of the eight nutrients be included on the label even if the food contained a very small or zero level of a nutrient on the ground that it was burdensome and tantamount to a requirement for "negative labeling."

Thereafter the FDA developed a rule which required manufacturers to state the level of a nutrient as zero if the amount of the nutrient in the product is less than 2% of the USRDA for that nutrient. (Certain caveats are attached where 5 or more of the 8 nutrients are present in the product at less than 2% of the USRDA.)

In its labeling rule, the FDA considers less than 2% of the RDA to be an insignificant quantity of the nutrient in a particular food. The FDA chose the 2% level as the cut off for measurement of nutrients in foods for labeling purposes because scientific techniques for nutrient analysis are not sufficiently sophisticated to provide reliable data about nutrients that are present in foods in very small quantities.

The Department realizes that standards developed for labeling purposes may not be directly transferable to the competitive foods rule. However, consideration of FDA treatment of nutrient levels and characterization of those levels is helpful in understanding how other agencies view quantities of nutrients present in foods.

Using the established FDA upper and lower values of 10% and 2% as guidelines, the Department has determined that 5% of the RDA for at least one of the nutrients is the minimum a food must contain to be approved for competitive sale. The Department believes that a 5% requirement is a reasonable means of implementing the policy that a competitive food must make at least a minimal nutritional contribution to a child's diet.

D. Identification of Foods of Minimal Nutritional Value

After establishing a specific standard to define foods of minimal nutritional value, the Department attempted to identify those foods that fell below the standard and therefore could be sold only during specified times during the school day. The 5 percent standard was applied to a wide array of individual foods using nutrient values from food composition data that were available to the Department.

During this preliminary identification process, it became clear that it was necessary and reasonable to identify foods by category. The Department recognized that there were important similarities among the individual items initially identified as foods of minimal nutritional value. These foods contained similar ingredients.

In addition, the Department was aware of numerous practical and policy reasons for adopting a categorical approach. First, the nutritional data available were not sufficiently detailed to permit analysis of all of the individual food items that are on the market. In particular, almost no information was available for items by brand name.

Second, the development of a list of approved individual food items would impose a monumental administrative burden at the federal level. Since there are many thousands of food items sold in grocery stores and thousands more introduced into the market each year, the Department would have to spend considerable effort reviewing these individual items to determine whether they did or did not meet the competitive food standard. This task would be particularly difficult since many foods do not have nutrient labeling, and we would need to obtain specific composition information on each product from the manufacturer. Under this system, we would have to review each food every time a formula adjustment was made by the manufacturer.

Moreover, implementation of a federal rule that identified thousands of individual foods would result in an immense administrative burden at the local level as well. The implementation of federal regulations pertaining to the National School Lunch Program takes place in 92,000 participating schools. Under a competitive foods rule, each of these schools will need to know which foods can and cannot be sold competitively in the school. It would not be practical to expect each school to maintain a current list of all individual foods identified by the Department as foods of minimal nutritional value since such a list would be lengthy and would be constantly changing due to the introduction of new items and reformulation of existing items in the market place.

In its comments on the April 25 proposal, Hershey Foods suggested that one way to avoid these problems of developing and maintaining a list of individual foods would be simply to require manufacturers to indicate on product labels whether the products were acceptable for competitive sale under this rule. We rejected this approach in order to avoid even the appearance of Department endorsement of specific products.

Based on our review of the nutrient content of individual foods, it became clear that all or virtually all foods in certain categories provide less than 5% of each of the 8 specified nutrients per 100 calories and per serving. We have therefore defined four categories of foods of limited nutritional value: soda water, water ices, chewing gum, and certain candies. These candies are subcategorized to include hard candies, jellies and gums, marshmallow candies, fondants, licorice, spun candies, and candy coated popcorn. In describing these categories, the Department relied on descriptions used by industry, classifications used in nationwide surveys, and Standards of Identity established by the Food and Drug Administration in the Code of Federal Regulations. For the purpose of this rule the Department has determined serving sizes for each of the categories.

They are:

Soda, 12 fluid ounces.
Frozen ices, 3 fluid ounces.
Candies, 1.5 ounces.
Gum, 1 stick or piece.

These units correspond with the units in which these products are frequently sold or consumed.

The Department recognizes that a regulatory scheme based entirely on a categorical approach would not be precise. In order to insure that all foods acceptable for competitive sale meet the nutrient test and that only those foods which fail the nutrient test are defined as foods of minimal nutritional value for the purposes of this rule, the Department is proposing a procedure by which individual foods can be considered.

A list of categories of foods of minimal nutritional value will be published in the final rule. Thereafter, persons may request the Department to review individual foods.

A person may petition the Department to approve for sale an individual food which falls into a category of foods of minimal nutritional value by submitting a nutrient analysis of the food demonstrating that it provides 5 percent or more of the USRDA for any of the 8 specified nutrients per 100 calories or 5 percent or more of the USRDA for any of 8 specified nutrients per serving. (In the case of artificially sweetened foods, only the per serving measure will apply.) Upon such a showing, the Department will inform the petitioner that the food is an approved competitive food.

A person may also petition the Department to add to the list of foods of minimal nutritional value an individual food which does not fall within a listed category of such foods but which nevertheless provides less than 5 percent of the USRDA for each of the 8 specified nutrients per 100 calories and less than 5 percent of the USRDA for each of the 8 specified nutrients per serving. Along with the request the petitioner must submit a list of the ingredients which the food contains. If the Department determines from a review of the ingredients that the food should be classified as a food of minimal nutritional value the Department will inform the manufacturer of the food that within 60 days, the product will be so classified unless the manufacturer submits a nutrient analysis of the food demonstrating that it provides 5 percent or more of the USRDA for any of the 8 specified nutrients per 100 calories or 5 percent or more of the USRDA for any of the 8 specified nutrients per serving. (In the case of artificially sweetened foods, only the per serving measure will apply.)

By May 1 and November 1 of each year, the Department will amend Appendix B of Parts 210 and 220 to reflect the results of Departmental decisions on such petitions.

Implementation Issues

A. Local Rules

The Department is proposing a rule which identifies foods that clearly make the least nutritional contribution to a child's diet.

The test used to define foods of minimal nutritional value is a conservative one. Like the Department's Type A meal pattern requirements, it represents a baseline, minimum standards approach. This rule should in no way be construed as endorsing all other foods.

While no School Food Authority may adopt a less comprehensive competitive food policy, any School Food Authority may develop more comprehensive rules. Thus, those States and localities which have already adopted rules that are more comprehensive than this proposal are free to continue those rules. This is consistent with the general proposition that States may develop any regulation concerning the National School Lunch Program and School Breakfast Program as long as the local regulation does not conflict with federal regulations (7 CFR 210.19). Recognizing that existing regulations for the school food programs establish *minimum* standards for the receipt of federal funds, many school districts have adopted more rigorous standards in order to provide superior meals to students. School districts may wish to continue this leadership in the competitive foods area.

In adopting a conservative, baseline approach to the regulation of competitive foods, the Department recognizes that there is presently considerable interest in this issue at the local level. The public comments on the Department's April 25 and December 15 notices from parents of school age children reflected parents' desire and willingness to participate in the development of local competitive foods policies.

Testimony at the public hearings indicated that in the past competitive foods decisions at the local level were frequently made without the knowledge or participation of parents. In communities where there is no competitive foods policy, many parents at the public hearings stated that they were willing to participate in establishing one. A recent Gallup Poll, revealed that 67 percent of parents of children attending schools that offer the school lunch program believed that candy should not be available for sale in schools while 65 percent believed chewing gum should not be available. Thus, it is apparent that parents have definite ideas about competitive foods policy and considerable interest in participating in its formation.

The Department encourages parents, students, school officials, school food service personnel, and nutrition experts to work together to design local policies. We believe it is desirable for local communities to consider local needs in the development of a competitive foods policy which uses the federal rule as a minimum standard. The school meals programs are a partnership of local, State, and Federal agencies. Local and State officials have the authority to implement a more comprehensive rule—one that regulates foods additional to those proposed by the Department. Similarly, the Department may, in its continuous review of this issue determine that in the future a more comprehensive Federal rule is desirable.

B. Age Distinctions

The Department received a significant number of comments in favor of age distinctions in the rule which would allow older children access to foods of minimal nutritional value not available to younger ones.

The legislative history of the competitive foods amendment does not discuss such a distinction. Of those States and localities which have competitive foods policies, only a handful make age distinctions. Many commentors opposed making age distinctions in the rule on the grounds that because nutrition education programs are still new in most areas, children of all ages lack the information necessary to make informed food choices. These commentors indicated that until such time as all children have adequate nutrition education programs, any rule should apply equally to children of all ages.

The Department believes that since its standard defines as foods of minimal nutritional value those foods which have the least to offer nutritionally, the rule should apply to all age groups. Where local communities develop more comprehensive competitive foods policies, they may wish to consider whether age distinctions may be appropriate in their additional regulations.

C. Time and Place

We are proposing a rule that would prohibit the sale of foods of minimal nutritional value throughout the school until after the end of the last lunch period of the school day. In restoring the Secretary's authority to regulate the sale of competitive foods, Congress sought to protect the nutritional integrity of the federal school food programs and to foster a school environment in which nutrition education and food service policies reinforce each other in promoting good eating habits among students. We believe that a rule permitting the sale of foods of minimal nutritional value before lunch or in areas of the school outside the cafeteria could not accomplish these central objectives of the 1977 competitive foods amendment.

If immediately outside the cafeteria—or anywhere else in the school—foods of minimal nutritional value could be sold in vending machines or at snack counters, it is doubtful whether the sale of these foods would be curtailed. Similarly, if students were permitted to purchase such foods in the morning hours it is unlikely that their consumption in place of the more nutritious foods in the federal school food programs would be reduced. We therefore conclude that the scope of the proposed rule in terms of time and place of application is essential if it is to carry out the fundamental purposes of the statute.

D. Effective Date

The Department intends to publish a final rule as soon as possible after receiving and analyzing public comments on this proposal. We expect the effective date of the final regulations to be January 1, 1980.

V. Request for Comments on the Proposed Rule

Throughout this rulemaking proceeding, public comments have been extremely helpful to the Department. The proposed rule incorporates a standard by which to evaluate all foods. Comments that specifically address the appropriateness of this standard will be particularly helpful to the Department in developing the final rule.

If alternative standards are suggested, commentors are urged to explain why they believe the suggested alternative should be preferred. Similarly, if commentors believe that the Department's formulation of categories of foods of minimal nutritional value includes foods which exceed the 5 percent nutritive standard or excludes foods which fail the 5 percent standard commentors are urged to submit supporting documentation for these claims.

Although we are particularly interested in comments on the proposed standard for evaluation of foods, comments on any of the issues raised by this proposal will be helpful to the Department in formulating the final rule.

Copies of the FDA regulations cited in the definitions of soda water and water ices in Appendix B can be obtained from: Margaret O'K. Glavin, Director, School Programs Division, USDA, FNS, Washington, D.C. 20250.

Footnotes

1. In order to qualify for federal reimbursement, a "Type A" school lunch must contain specified portions from four food groups. Other foods may be served along with these Type A foods.

2. Ten-State Nutrition Survey, 1968–1970, Center for Disease Control, Atlanta, Georgia. *DHEW Publication No. (HSM) 72–8134, 1970.*

3. The Health and Nutrition Examination Survey (HANES), United States, 1971–72, Dietary Intake and Biochemical Findings, National Center for Health Statistics. *DHEW Publication No. (HRA) 74–1219–1, 1974.*

4. Frank, Gail C. et al. Dietary Studies and the Relationship of Diet to Cardiovascular Disease Risk Factor Variables in Ten Year Old Children. The Bogalusa Heart Study. *The American Journal of Clinical Nutrition.* Volume 31. February 1978.

5. *Ibid.*

6. HANES, *supra* note 3.

7. HANES, *supra* note 3; Nutrition Surveillance, Center for Disease Control, *DHEW Publication No. (CDC) 77–8295,* December, 1975.

8. Ten State Nutrition Survey, *supra* note 2.

9. Dresser, Connie M., Eating Styles Today: Implications of the HANES Food Consumption Survey, National Center for Health Statistics, presented at the American Dietetic Association 61st Annual Meeting, 1978.

10. Frank, *supra* note 4.

11. Evaluation of the Health Aspects of Sucrose as a Food Ingredient, Federation of American Societies for Experimental Biology, FDA Contract No. FDA 223–75–2004, 1976.

12. Symposium: Can disease of over consumption be prevented by dietary changes? A critique of the evidence, sponsored by the American Society for Clinical Nutrition, Bethesda, Maryland, 1979.

13. Bibby, Basil G., the cariogenicity of snack foods and confections, Journal of the American Dental Association, Volume 90, January, 1975.

14. Joint Food and Agriculture Organization/World Health Organization Expert Committee on Nutrition, Eighth Report, Part I: Food Fortification. WHO Technical Reports Series, No. 447, 1971.

15. Assembly of Life Science/National Research Council and the Institute of Medicine, National Academy of Sciences, Committee for a Study on Saccharin and food Safety Policy

Part 1 of a 2—Part Study, Saccharin: Technical Assessment of Risks and Benefits, Washington, D.C , November, 1978.

Part 2 of a 2—Part Study. Food Safety Policy: Scientific and Societal Considerations, Washington, D.C., March 1, 1979.

PART 210—NATIONAL SCHOOL LUNCH PROGRAM

I. Accordingly, Part 210 would be amended as follows:

1. Section 210.2 is amended by redesignating paragraphs (h–1) through (h–7) as paragraphs (h–2) through (h–8) and adding new paragraphs (c–3) and (h–1) to read as follows:

§ 210.2 Definitions.

* * * * *

(c–3) "Competitive foods approved by the Secretary" means all foods sold in competition with the National School Lunch Program to children on school premises from the beginning of the school day until after the last lunch period with the exception of foods of minimal nutritional value as listed in Appendix B of this part.

* * * * *

(h–1) "Food of minimal nutritional value" means (1) in the case of artificially sweetened foods, a food which provides less than 5 percent of the USRDA for each of 8 specified nutrients per serving; (2) in the case of all other foods, a food which provides less than 5 percent of the USRDA for each of 8 specified nutrients per 100 calories and less than 5 percent of the USRDA for each of 8 specified nutrients per serving. The 8 nutrients to be assessed for this purpose are: protein, vitamin A, vitamin C, niacin, riboflavin, thiamin, calcium and iron. Foods of minimal nutritional value are listed in Appendix B of this part.

2. Section 210.15b is revised to read as follows:

§ 210.15b Competitive food services.

(a) State agencies and School Food Authorities shall establish such rules or regulations as are necessary to control the sale of foods in competition with a school's nonprofit food service under the Program, *Provided,* That such regulations shall not authorize the sale of foods of minimal nutritional value as listed in Appendix B of this part on the school premises prior to the end of the last lunch period. The sale of competitive foods approved by the Secretary may be allowed at the discretion of the State agency and School Food Authority provided that the proceeds from the sale of such foods inure to the benefit of the school's nonprofit meal program or to the school or to student organizatons approved by the school.

(b)(1) Any person may submit a petition to FNS requesting that an individual food be exempted from a category of foods of minimal nutritional value. In the case of artificially sweetened foods, the petition must include a statement of the percent of USRDA for the 8 nutrients listed in § 210.2(h–1) that the food provides per serving. In the case of all other foods, the petition must include a statement of the percentage of USRDA for the 8 nutrients listed in § 210.2(h–1) that the food provides per serving and per 100 calories. The Department will determine whether or not the food is a food of minimal nutritional value as defined in § 210.2(h–1) and will inform the petitioner in writing of such determination.

(2) Any person may submit a petition to FNS requesting that an individual food be classified as a food of minimal nutritional value as defined in § 210.2(h–1). The petition must include a list in order of prevalence of the ingredients which the food contains. If, upon review of the petition, the Department determines that the food should not be classified as a food of minimal nutritional value, the petitioner will be so notified in writing. If, upon review of the petition, the Department determines that there is a substantial likelihood that the food should be classified as a food of minimal nutritional value as defined in § 210.2(h–1), the Department shall inform the petitioner and the manufacturer of the food in writing that the Department intends to so classify the food. Unless the manufacturer, within 60 days of receipt of this notification, submits information to the Department demonstrating to the satisfaction of the Department that the food should not be classified as a food of minimal nutritional value as defined in § 210.2(h–1), the food will be classified as a food of minimal nutritional value. Both the petitioner and the manufacturer shall be notified in writing of the Department's final determination.

(3) By May 1 and November 1 of each year, the Department will amend Appendix B to include or exclude those individual foods identified under paragraphs (b)(1) and (b)(2) of this section.

PART 220—SCHOOL BREAKFAST PROGRAM

II. Accordingly, Part 220 would be amended as follows:

1. Section 220.2 is amended by adding new paragraphs (c–1) and (i–1) to read as follows:

§ 220.2 Definitions.

* * * * *

(c–1) "Competitive foods approved by the Secretary" means all foods sold in

competition with the School Breakfast Program to children on school premises from the beginning of the school day until after the last lunch period with the exception of foods of minimal nutritional value as listed in Appendix B of this part.

* * * * *

(i-1) "Food of minimal nutritional value" means (1) in the case of artificially sweetened foods, a food which provides less than 5 percent of the USRDA for each of 8 specified nutrients per serving; (2) in the case of all other foods, a food which provides less than 5 percent of the USRDA for each of 8 specified nutrients per 100 calories and less than 5 percent of the USRDA for each of 8 specified nutrients per serving. The 8 nutrients to be assessed for this purpose are: protein, vitamin A, vitamin C, niacin, riboflavin, thiamin, calcium and iron. Foods of minimal nutritional value are listed in Appendix B of this part.

2. Section 220.12 is revised to read as follows:

§ 220.12 Competitive food services.

(a) State agencies and School Food Authorities shall establish such rules or regulations as are necessary to control the sale of food in competition with a school's nonprofit food service under the Program, *Provided,* That such regulations shall not authorize the sale of foods of minimal nutritional value as listed in Appendix B of this part on school premises prior to the end of the last lunch period. The sale of competitive foods approved by the Secretary may be allowed at the discretion of the State agency and School Food Authority provided that the proceeds from the sale of such foods inure to the benefit of the school's nonprofit meal program or to the school or to student orgranizations approved by the school.

(b)(1) Any person may submit a petition to FNS requesting that an individual food be exempted from a category of foods of minimal nutritional value. In the case of artifically sweetened foods, the petition must include a statement of the percent of USRDA for the 8 nutrients listed in § 220.2(i-1) that the food provides per serving. In the case of all other foods, the petition must include a statement of the percent of USRDA for the 8 nutrients listed in § 220.2(i-1) that the food provides per serving and per 100 calories. The Department will determine whether or not the food is a food of minimal nutritional value as defined in § 220.2(i-1), and will inform the petitioner in writing.

(2) Any person may submit a petition to FNS requesting that an individual food be classified as a food of minimal nutritional value as defiend in § 220.2(i-1). The petition must include a list in order of prevalence of the ingredients which the food contains. If, upon review of the petition, the Department determines that the food should not be classified as a food of minimal nutritional value, the petitioner will be so notified in writing. If, upon review of the petition, the Department determines that there is a substantial likelihood that the food shold be classified as a food of minimal nutritional value as defined in § 220.2(i-1), the Department shall inform the petitioner and the manufacturere of the food in writing that the Department intends to so classfiy the food. Unless the manufacturer, within 60 days of receipt of this notification, submits information demonstrating to the satisfaction of the Department that the food should not be classified as a food of minimal nutritional value as defined in § 220.2(i-1), the food will be classified as a food of minimal nutritional value. both the petitioner and the manufacturer shall be notified in writing of the Department's final determination.

(3) by May 1 and November 1 of each year, the Department will amend Appendix B to include or exclude those individual foods identified under paragraphs (b)(1) and (b)(2) of this section.

3. Appendix B is added to Part 220 to read as follows:

Appendix B—Foods of Minimal Nutritional Value

(1) SODA WATER as defined by 21 CFR 165.175 Food and Drug Administration Regulations except that artificial sweeteners are an ingredient that is included in this definition.

(2) WATER ICES as defined by 21 CFR 135.160 Food and Drug Administration Regulations except that water ices which contain fruit or fruit juices are not included in this definition.

(3) CHEWING GUM flavored products from natural of synthetic gums and other ingredients which form an insoluble mass for chewing.

(4) CERTAIN CANDIES processed foods made predominantly from sweeteners or artificial sweeteners with a variety of minor ingredients which characterize the following types:

(a) HARD CANDY—A product made predominantly from sugar (sucrose) and corn syrup which may be flavored and colored, is characterized by a hard, brittle texture, and includes such items as sour balls, fruit balls, candy sticks, lollipops, starlight mints, after dinner mints, sugar wafers, rock candy, cinnamon candies, breath mints, jaw breakers and cough drops.

(b) JELLIES AND GUMS—a mixture of carbohydrates which are combined to form a stable gelatinous system of jelly-like character, are generally flavored and colored, and include gum drops, jelly beans, jellied and fruit-flavored slices.

(c) MARSHMALLOW CANDIES—an aerated confection composed of sugar, corn syrup, invert sugar, 20% water and gelatin or egg white to which flavors and colors may be added.

(d) FONDANT—a product consisting of microscopic-sized sugar crystals which are separated by a thin film of sugar and/or invert sugar in solution such as candy corn, soft mints.

(e) LICORICE—a product made predominantly from sugar and corn syrup which is flavored with an extract made from the licorice root.

(f) SPUN CANDY—a product that is made from sugar that has been boiled at high temperature and spun at a high speed in a special machine.

(g) CANDY COATED POPCORN—popcorn which is coated with a mixture made predominantly from sugar and corn syrup.

(Sec. 17, Public Law 95-166, 91 Stat. 1345, (42 U.S.C. 1779).)

Note.—In accordance with Executive Order 12044 a copy of the detailed draft impact analysis statement for this proposed regulation is available at the Office of the Director, School Programs Division, USDA-FNS, Washington, D.C. 20250 during regular business hours (8:30 a.m. to 5:00 p.m., Monday through Friday).

Dated: June 29, 1979.

Carol Tucker Foreman,

Assistant Secretary for Food and Consumer Services.

[FR Doc. 79-20840 Filed 7-5-79; 8:45 am]

BILLING CODE 3410-30-M

federal register

Friday
July 6, 1979

Part VII

Department of Health, Education, and Welfare

Food and Drug Administration

Prescription Drug Products; Patient Labeling Requirements

DEPARTMENT OF HEALTH, EDUCATION, AND WELFARE

Food and Drug Administration

[21 CFR Part 203]

[Docket No. 79N-0186]

Prescription Drug Products; Patient Labeling Requirements

AGENCY: Food and Drug Administration.

ACTION: Proposed Rule.

SUMMARY: The agency is proposing regulations that would require most prescription drug products for human use to be dispensed with labeling written in nontechnical language that is directed to the patient. The labeling would inform the patient about the drug product. The agency is taking this action to promote the safe and effective use of prescription drug products by patients and to ensure that patients have the opportunity to be informed of the benefits and risks involved in the use of prescription drug products.

DATE: Comments by October 4, 1979.

ADDRESS: Written comments to the Hearing Clerk (HFA-305). Food and Drug Administration, Rm. 4-65, 5600 Fishers Lane, Rockville, MD 20857.

FOR FURTHER INFORMATION CONTACT: Michael C. McGrane, Bureau of Drugs (HFD-30), Food and Drug Administration, Department of Health, Education, and Welfare, 5600 Fishers Lane, Rockville, MD 20857, 301-443-5220.

SUPPLEMENTARY INFORMATION: The Food and Drug Administration (FDA) is proposing regulations that would require manufacturers to distribute labeling to patients for most prescription drug products for human use, including biological products licensed under the Public Health Service Act of 1944 (42 U.S.C. 262). The regulations would require dispensers of prescription drug products to provide the labeling to patients when the products are dispensed. This action is being taken because FDA believes that prescription drug labeling that is directed to patients will promote the safe and effective use of prescription drug products and that patients have a right to know about the benefits, risks, and directions for use of the products.

Public Hearing

Approximately 60 days after the date of publication of this proposal, a public hearing will be held to receive data, information, and views from interested persons on the proposed patient labeling regulations. The hearing will be held under Part 15 (21 CFR Part 15) of FDA's administrative practices and procedures regulations. A notice stating the date, time, and place for the hearing and explaining how a person may participate in the hearing will appear in a future issue of the Federal Register.

FDA's Authority to Require Patient labeling for Prescription Drug Products

The Federal Food, Drug, and Cosmetic Act (the act) (21 U.S.C. 301 et seq.) requires FDA to assure that marketed drug products are safe and effective for their intended use and are properly labeled. To fulfill that responsibility, the agency (1) monitors drug manufacturers and distributors to ensure that drug products are manufactured and distributed under conditions that assure their identity, strength, quality, and purity, (2) approves new drugs for marketing only if they have been shown to be safe and effective, and (3) monitors drug labeling and prescription drug advertising to ensure that they provide accurate information about drug products.

A major part of FDA's efforts to assure the safe and effective use of drug products involves FDA's monitoring of drug labeling. Under section 502(a) of the act (21 U.S.C. 352(a)), a drug product is misbranded and, accordingly, subject to the sanctions provided in the act for violative products, if the product's labeling is false or misleading in any particular. In addition, under section 505(d) and (e) of the act (21 U.S.C. 355(d) and (e)), FDA must refuse to approve a new drug application (NDA) (approval of which permits a new drug to be marketed) or withdraw approval of an approved NDA, if the labeling for the drug is false or misleading in any particular. Section 201(n) of the act (21 U.S.C. 321(n)) explicitly provides that a drug product's labeling is misleading if it fails to reveal facts that are material in light of representations made in the labeling or material with respect to consequences that may result from the use of the product under the conditions of use prescribed in its labeling or under customary or usual conditions of use. Thus, the statute clearly authorizes FDA to take remedial action against a drug product whose labeling is false or misleading in any particular and to compel disclosure of information that is material with respect to consequences that result from the use of the drug product under its labeled conditions, as well as conditions that are customary or usual.

Based upon that authority, the agency proposes to require manufacturers of prescription drug products to disclose information about their products in the form of patient labeling. Just as scientific standards for evaluating a drug product's safety and effectiveness and manufacturing practices have evolved since the enactment of the act in 1938, standards for appropriate labeling for drug products must also change as data are compiled about the effects of labeling on patients' safe and effective use of drug products and as patients demand more information about the use and effects of prescription drug products.

Significant changes have been made in the labeling requirements for prescription drug products during the last 41 years. Section 502(f)(1) of the act (21 U.S.C. 352(f)(1)), enacted in 1938, requires the labeling of a drug product to bear adequate directions for its use. That requirement has been applied traditionally to over-the-counter (OTC) drug products. Section 201.5 of FDA's general labeling regulations (21 CFR 201.5) defines "adequate directions for use" as directions under which lay persons (that is, patients) can use drug product safely and for the purposes for which it is intended. The agency assumed that use information and warnings were not necessary in the labeling of prescription drug products because physicians' training and experience made them aware of the indications, proper dosages, hazards, contraindications, side effects, and precautions under which prescription drug products could be safely used. Accordingly, prescription drug products were sold and distributed to pharmacists and physicians with labeling that contained little information beyond the product's name and a statement that it was a prescription drug. Prescription drug products were dispensed to patients with labeling consisting only of the name and place of business of the dispenser, the serial number and date of the prescription, and the name of the prescriber. (The Federal Food, Drug, and Cosmetic Act of 1938, c. 675, section 503, 52 Stat. 1051 (1938) (current version at 21 U.S.C. 353).)

During and after World War II, however, drug research expanded significantly, and many new drug products appeared on the market each year. It became obvious to FDA that physicians had neither the time nor the facilities to investigate carefully each product to determine its proper uses. Although an informational brochure was required to be submitted to the agency as part of NDA before a new drug could

be approved for marketing, manufacturers often failed to distribute these brochures to physicians. In some cases the manufacturers did not even print the brochures for distribution. In addition, promotional material commonly available for a prescription drug product often failed to include essential information about its proper use.

In 1951 Congress clarified labeling requirements for prescription drug products dispensed to patients by requiring their labels to bear the name and address of the dispenser, the serial number and date of the prescription or of its filing, the name of the prescriber and, if stated in the prescription, the name of the patient, and any directions for use and cautionary statements contained in the prescription (21 U.S.C. 353(b)(2)). These statutory changes primarily codified existing practice and, therefore, did not significantly affect the labeling that patients received when prescription drug products were dispensed. The new provisions were not intended to affect, nor did they affect, the labeling requirements for prescription drug products before dispensing.

These conditions led FDA to require in the Federal Register of December 9, 1960 (25 FR 12592) that any labeling making a claim for a prescription drug product bear "full disclosure" information for pharmacists and physicians (now codified in 21 CFR 201.100(d)). Full disclosure information means adequate information for the safe and effective use of the drug product, including indications, effects, dosages, routes, methods, and frequency and duration of administration and any relevant warnings, hazards, contraindications, side effects, and precautions. In addition, FDA required in the Fedral Register of September 6, 1961 (26 FR 8389) that each package of a prescription drug product that is shipped to pharmacists or physicians bear adequate information on or within the dispensing package (commonly called a package insert) that fully discloses the directions and warnings about the proper use of the drug product (now codified in 21 CFR 201.100(c)). Althoulgh these requirements affected the amount and kind of information about prescription drug products that manufacturers and distributors provided to pharmacists and physicians, they did not affect the information required to be given to patients, which remained minimal.

Just as prescription drug labeling for physicians and pharmacists evolved from merely identifying a prescription drug product to requiring that a product be accomnpanied by "full disclosure" labeling to ensure its safe and effective use, FDA has now determined that new information demonstrates that for the safe and effective use of prescription drug products more information about the products must also be provided to patients.

Patient Labeling Currently Required by Regulation

Since the late 1960's, FDA has on several occasions required that labeling written in nontechnical language be provided directly to patients when certain prescription durg products are dispensed. In the Federal Register of June 18, 1968 (33 FR 8812), FDA required that each isoproterenol inhalation drug product dispensed to a patient bear a two-sentence warning on the container (now codified in 21 CFR 201.305). These drug products are self-administered when severe breathing difficulty occurs. An association was shown, however, between repeated and excessive use of the drug and severe paradoxical bronchoconstriction. In other words, the drug apparently caused the condition it was intended to treat. Accordingly, a warning, telling the patient not to exceed the prescribed dose and to contact a physician immediately if breathing difficulty persists, was needed to warn patients not to overuse the product and to tell them of the proper action to take if the side effect occurred.

In the Federal Register of June 11, 1970 (35 FR 9001), FDA published a final regulation requiring certain information about the use of oral contraceptive drug products to be made available to patients (now codified in 21 CFR 310.501). The requirement was based on an association between the use of oral contraceptives and the likelihood of blood clots. Although FDA had previously advised physicians of the risk and required the labeling directed to them to be revised, the agency concluded that the information should also be provided directly to oral contraceptive users. Oral contraceptives contain potent steroid hormones that affect many organ systems and they are used for long periods of time by large numbers of women, who for the most part are healthy. The use of the drug is largely a matter of choice, because other methods of contraception are available. The regulation thus required that a brief information leaflet stating that the drug product could cause side effects, including potentially fatal blood clots, be provided directly to the user. The leaflet emphasized the importance of discussing the use of the drug product with the patient's physician and stated that a booklet containing more information in nontechnical language about the product's effectiveness, contraindications, warnings, precautions,and adverse reactions was available form the physician. The regulation required manufacturers of oral contraceptives to provide these booklets to physicians. The information in the booklet was based wholly on the information in the physician labeling for the product.

In issuing patient labeling requirements (21 CFR 310.515) in the Federal Register of July 22, 1977 (42 FR 37636) for estrogenic drug products, which are drugs used primarily to treat menopausal symptoms in women, FDA expanded significantly the scope of its patient labeling requirements. Unlike oral contraceptives, which are normally marketed in unit-of-use packages that contain a 30-day supply, estrogenic drug products are usually custom packaged by the dispenser each time a prescription is filled. The unit-of-use packaging of oral contraceptives permitted manufacturers to include the leaflet in the package so the labeling was automatically dispensed with the package. Such was not the case, however, for estrogenic drug products, where the labeling is not affixed directly to the dispensing package by the manufacturer. Accordingly, the patient labeling requirement for these products placed significantly greater obligations on the dispenser to assure that the labeling is provided with the product.

In the Federal Register of January 31, 1978 (43 FR 4212), FDA substantially revised the patient labeling regulations for oral contraceptives (21 CFR 310.501). The agency abandoned the approach of the earlier regulation, which required only the short leaflet to be dispensed with the drug product. Under the revised regulation, more detailed information was required to be provided with the drug product. A summary was required to highlight the most important information about the use of the drug product and to call the patient's attention to the more detailed patient labeling which also was required to be dispensed with each package of the drug product. This more detailed information is a revised version of the patient booklet formerly available from the physician upon request. Direct distribution of the more detailed labeling with the drug product was required because a national study of oral contraceptive users showed that although a majority of patients desired more complete information about the product, most did not receive the

booklet under the former distribution scheme (Ref. 1).

FDA has also established a patient labeling requirement for intrauterine devices (IUD's) for contraception that are regulated as prescription drug products (21 CFR 310.502) as well as those IUD's regulated as medical devices (21 CFR 801.427). This patient labeling is intended to assist the patient in deciding whether to use an IUD for contraception and includes information on usage, contraindications, warnings, adverse reactions, precautions, side effects, and effectiveness. The agency has more recently, in the Federal Register of October 13, 1978 (43 FR 47178), established a patient labeling requirement for progestational drug products. Patient labeling requirements had been established previously for medroxyprogesterone acetate injectable for contraception (21 CFR 310.501a) and for diethylstilbestrol (DES) for oral use as a postcoital contraceptive (21 CFR 310.501(b)), both in acticipation of the approval of NDA's for those drug products for contraception. No drug products to which these patient labeling requirements would apply, however, have yet been approved for marketing.

Each of the drug products for which patient labeling is currently required by regulations would be exempt from these proposed general patient labeling regulations. If final patient labeling regulations are established for prescription drug products, the agency will amend the current regulations to conform them to the general requirements.

Several comments to the agency have noted that legislation introduced in recent sessions of Congress would require patient labeling for most prescription drug products (for example, the Drug Regulation Reform Act of 1978 (HR 11611 and S 2755, 95th Cong. 2d. Sess. (1978))). The comments have suggested that FDA delay its patient labeling program for prescription drug products until Congress clearly provides FDA with authority to issue these requirements. It is the agency's view, however, that that legislation merely confirms the agency's existing authority to require patient labeling for prescription drug products. The agency's authority to require patient labeling for prescription drug products has been preliminarily upheld in a challenge to the estrogen patient labeling regulation. *Pharmaceutical Manufacturers Ass'n* v. *FDA*, Civil No. 77-291 (D. Del. October 5, 1977) (order denying preliminary injunction).

FDA's Patient Prescription Drug Labeling Project

FDA requirements for patient labeling for prescription drug products have centered on drug products that present significant risks to patients but also afford patients the ability to participate with physicians in choosing whether to use the products. In these cases FDA concluded that patients need information upon which to decide whether to take or to continue to use the drug product. Following the development of the patient labeling requirement for oral contraceptives in 1970, however, FDA began evaluating the usefulness of patient labeling for prescription drug products generally and studied ways to present the information to patients. Following the National Food and Drug Advisory Committee's suggestions, FDA in 1974 began a patient prescription drug labeling project to investigate whether FDA patient labeling efforts should be expanded to apply to a variety of prescription drug products. Since the project began, FDA has (1) discussed patient labeling issues with interested and potentially affected persons, (2) reviewed scientific literature about patients' needs and desires for patient labeling, and (3) conducted research projects to evaluate existing and model patient labeling pieces and reviewed existing methods for communicating drug information to patients.

Public Discussions

Between September 1974 and June 1975, FDA officials met individually with nine organizations representing physicians, pharmacists, and the pharmaceutical industry and in July 1975 met with consumer representatives to discuss the general concept of patient labeling. The minutes of each meeting have been placed on file in the FDA Hearing Clerk's office.

The meetings identified the concerns about patient labeling on the part of individuals and groups who would be affected by its establishment. The topics discussed included: the criteria for choosing drug products for which patient labeling should be required; the possibility that patient labeling would interfere in the patient/physician relationship; the problems patient labeling might present to pharmacists; the consumer support for patient labeling; the liability issues the labeling would raise; the problem of writing patient labeling in nontechnical language; the information that should be included in patient labeling; the need for physician discretion to withhold labeling from a patient; and the storage and logistical problems the labeling would create.

While these meetings were being held, FDA was petitioned on March 31, 1975 by a consortium of consumer organizations to require written warning information on labels of some prescription drug products. The petition was filed by the Center for Law and Social Policy on behalf of itself and Consumers Union, Consumer Action for Improved Food and Drugs (Affiliated with Consumer Action Inc.), the National Organization for Women, the Women's Equity Action League, and the Women's Legal Defense Fund. A copy of the petition has been placed on file in the FDA Hearing Clerk's office.

The petitioners argued that, because prescription drugs are toxic or otherwise potentially harmful and cannot be used safely without physician supervision, patients should be told about the benefits and risks of prescription drug products, as well as ways to use them properly. The petitioners suggested that patients do not use prescription drug products properly because physicians fail to provide all the information patients need, or because patients do not understand or remember the information.

The petitioners asked FDA to require special warning statements on the labels of certain drug products when dispensed and to require separate and detailed supplementary instructions and precautions to be given to patients when the products are dispensed. The petitioners asked FDA to require initially patient labeling for the following drug products: (1) those that pose dangers to pregnant or nursing women; (2) those that are widely used and can pose serious dangers, such as hypnotics and tranquilizers; and (3) those that have been overprescribed in the past and have serious side effects, such as amphetamines and chloramphenicol.

A notice published in the Federal Register of November 7, 1975 (40 FR 52075), reviewed briefly the consumer petition and the opinions and views on patient labeling that had been obtained from the professional, trade, and consumer groups who had met with the agency. The notice asked for comments to help formulate a policy on patient labeling for prescription drug products. The notice specifically asked for comment both on the consumer petition and on patient labeling in general that were based on actual experience obtained form studies of patient labeling. Comments were also asked about the following aspects of patient

labeling: advantages and disadvantages, scope and detail, format and style, methods of drafting and distribution of patient labeling, and selection of drug products and priorities for patient labeling.

The agency received more than 1000 comments on the November 7, 1975 notice. About 750 of them were from consumers who favored patient labeling for prescription drug products. Some consumers described specific adverse effects they believed they could have avoided if they had had more information about a drug product prescribed for them.

Comments from physicians, pharmacists, and professional and trade organizations ranged from full support for, to strong opposition against, patient labeling. The comments in favor of patient labeling suggested that it would (1) promote patient understanding of and adherence to the drug therapy, (2) permit the patient to avoid interactions with other drugs or foods, (3) prepare the patient for possible side effects, (4) inform the patient of positive and negative effects from the use of the drug product, (5) permit the patient to share in the decision to use the drug product, (6) enhance the patient/physician relationship, and (7) provide the pharmacist and physician with a basis for discussing the use of a prescription drug product with the patient.

Other comments, however, argued that patient labeling would (1) encourage self-diagnosis and the transfer of prescription drug products between patients, (2) produce adverse reactions in patients through suggestion, (3) affect adversely the liability of drug manufacturers, physicians, and pharmacists, (4) interfere with the patient/physician relationship, and (5) increase the cost of prescription drug products and health care in general.

Some comments believed that patient labeling would not communicate important drug information to most patients. Others suggested that patient labeling for a prescription drug product should be substantially more limited than the physician labeling for the project and include only information on the proper use of the drug product, its proper storage, and information on the recognition, prevention, and reporting of adverse effects. Comments also suggested that patient labeling information should be written in accurate, concise, and nontechnical language and placed directly on the drug product container or be distributed as a separate leaflet, or both.

Some comments suggested that the patient labeling should be distributed by the physician, while other comments argued that it should be distributed by the pharmacist. Several comments argued that any patient labeling requirement should permit the physician to withhold or direct the pharmacist to withhold the patient labeling from the patient if the physician believed that receipt of the labeling would not be in the best interest of the patient. Comments also suggested that it would be most important to require patient labeling for drug products that are commonly used, that present serious adverse effects, that are chronically used, and that are used by pregnant or nursing women. Some comments suggested that patient labeling would not be necessary for most drug products, while other comments urged that patient labeling be required for all prescription drug products. The comments also contended that the method of drafting patient labeling for prescription drug products should permit the participation of professional, trade, and consumer organizations. The agency has carefully reviewed the comments and has either adopted them in these proposed patient labeling regulations or has responded to them in this preamble.

To explore and focus further the issues relating to patient labeling, FDA hosted a series of four separate meetings in May and June 1976, in which a group of consumer advocates and FDA officials met with representatives from the pharmaceutical industry, medical associations, pharmacy associations, and allied health professions. Minutes of these meetings have also been placed on file in the Hearing Clerk's office. The meetings continued the agency's policy of soliciting the views of those groups who would be involved most in any general patient labeling program. The meetings also provided an opportunity to debate the issues raised by the consumer petition.

In 1976, FDA invited the Drug Information Association (DIA), an independent nonprofit professional group interested in drug information, to arrange a symposium on patient labeling for prescription drug products at which a diversity of views could be presented. FDA and DIA were joined by the American Medical Association (AMA) and the Pharmaceutical Manufacturers Association (PMA) as cosponsors of the symposium, which was held in November 1976. The symposium was attended by over 700 health professionals, consumer representatives, and members of the press and focused on the issues related to patient labeling for prescription drug products. The symposium proceedings were published as a special supplement to Volume 11 of the *Drug Information Journal* (January 1977) (Ref. 2). FDA representatives, the pharmaceutical industry, physicians, consumers, hospitals, and pharmacists presented their viewpoints on patient labeling. In addition, the symposium included several presentations about the kinds of information that patient labeling should contain, the potential distribution problems that patient labeling would raise, and potential effects that patient labeling would have on patients and the health care delivery system.

FDA has continued to solicit public contributions to the patient labeling program, and has most recently directed public discussion at its implementation. In December 1978, FDA sponsored a 2-day conference on the content and format of patient labeling. Approximately 300 participants attended, including pharmaceutical industry representatives, physicians, pharmacists, other health professionals, marketing and advertising representatives, and consumers. The conference was concerned solely with the information that patient labeling for prescription drug products should be required to contain and how the information should be presented to benefit people most likely to read it. The conference provided an opportunity for the interchange of ideas among those persons who would be affected most by a patient labeling requirement. Copies of the papers presented at the conference are on file in the FDA Hearing Clerk's office.

In February 1979, the Institute of Medicine of the National Academy of Sciences, under contract to FDA, sponsored a public hearing to solicit comments on how patient labeling should be objectively evaluated, once it is used on a widespread basis. A copy of the presentations at that hearing is also on file in the FDA Hearing Clerk's office.

Patients' Needs for Patient Labeling

FDA has also reviewed the literature on patient information for prescription drug products to determine the extent of current efforts to communicate drug information to patients. This review may be summarized in the context of the basic steps that one author believes necessary to process both oral and written communications (Ref. 3). The five basic steps applied to communications from health professionals to patients are as follows: (1) the patient must be exposed to the information; (2) the patient must pay attention to the information; (3) the

patient must understand the information; (4) the patient must accept the information; and (5) the patient must remember the information. There is a limited probability that each step will be completed, and the completion of each step depends upon the successful completion of all of the previous steps. A discussion of FDA's literature review in the context of each step follows:

Exposure. Although both the physician and the pharmacist have an opportunity to provide information to the patient about a prescribed drug product, studies show that patients are not exposed to information about prescription drug products. In a national telephone survey of patients, 48 percent of the respondents said that their physician did not talk to them about their most recent prescription and 88 percent said the pharmacist did not talk to them about the prescription (Ref. 4). In a study of patients at a clinic that allowed direct observation of the physician's instructions, one author found that the prescriber discussed the length of therapy in only 10 percent of the cases and the dosage frequency in only 17 percent of the cases. In 17 percent of the cases the drug was never discussed at all (Ref. 5). Other studies that have observed pharmacists' interactions with patients also suggest that pharmacists infrequently provide information to patients about prescription drug products (Refs. 6 through 9), even when the pharmacist is required to do so by State regulations (Ref. 10).

Attention. Although a physician may provide oral information to the patient about a prescribed drug product, the patient may not be able to process all of the information. Studies conducted in a clinic show that patients remember only about half of the statements made to them about their treatment, even when the patients are interviewed within minutes after leaving the physician (Refs. 11 and 12). A study conducted at a neighborhood health center showed that 63 percent of the patients could remember the name of the drug product prescribed for them, although a tape recording of the visit revealed that each patient had been told the drug's name (Ref. 13).

The order in which medical information is presented also affects how easily patients remember it (Ref. 14). In general, patients tend to remember what they are told first. Because information about a prescription drug product is often given toward the end of the interview, while the patient is still processing information relating to the diagnosis, the patient may not pay as much attention to the drug information as the diagnosis. In addition, a patient's natural anxiety during an examination may interfere with the patient's ability to focus attention on the information the physician provides (Ref. 15).

Understanding. Before patients can use information about prescription drugs, they must first understand it. When providing that information, however, health professionals frequently may use language that patients do not understand. One study revealed, for example, that a mother did not understand that her sick child would need to be hospitalized when she was told that the child would have to be "admitted for a work-up" (Ref. 16). In addition, terms that are frequently used by and have specific meaning to physicians, such as "piles," "jaundice," and "constipation" are frequently misunderstood by patients (Refs. 17 through 27).

Although patients may not understand what physicians tell them, they may be unwilling for several reasons to ask for clarification. Patients may not want to appear stupid (Ref. 28), or they may not want to bother health professionals with "silly" questions (Ref. 29).

Acceptance. Although patients probably do not believe that physicians and pharmacists provide incorrect information, they may still not accept the validity of the information provided. For example, a patient with high blood pressure may not take a prescribed drug product because the patient does not experience symptoms from the disease. Patients may also have a general negative attitude about prescription drug products. A national survey (Ref. 30) found that 30 percent of the respondents who said they used tranquilizers agreed that taking them was a sign of weakness, and a regional survey (Ref. 31) found that 33 percent of women who said they took oral contraceptives believed that the benefits of preventing unwanted pregnancy did not out weigh the risks to their health from taking oral contraceptives.

Memory. Even if the patient is exposed to information about a prescription drug product, and is attentive to, comprehends, and accepts it, for the information to be useful, the patient must also remember it. Nevertheless, studies show that significant proportions of patients do not remember medical information that is presented orally (Refs. 13, 15, 23, and 32).

Accordingly, oral communication of information about precription drug products by health professionals to patients cannot be relied upon to provide patients with the information they need to use prescription drug products properly.

In fact, however, patients may not be exposed to the information, and they may not pay attention to, understand, accept, or remember it. The agency believes that required patient labeling that is well designed and well-written will help overcome the problems, discussed above, that hamper the communication to patients of important information about prescription drug products. Although some of those problems apply both to oral and written information, because patient labeling will augment oral communications it will thus benefit patients.

Patient interest in patient labeling. Although patient interest in patient labeling has been expressed most forcefully by consumer activists, FDA believes that the activists' views reflect accurately broad patient support for patient labeling. Several surveys support this belief.

In a 1973 nationwide survey sponsored by FDA, 49 percent of the respondents said that they wanted additional information about prescription drug products, particularly written information in nontechnical language that would be dispensed with the products (Ref. 33). Independent researchers also found general support for patient labeling in a survey of 137 patients, and found specific support for oral contraceptive patient labeling (Ref. 34). Another survey of 828 students and outpatients showed that 82 percent of the persons sampled wanted to know more about prescription drug products than simple directions for use. They wanted information about side effects and about risks from over- and under-use of drug products (Ref. 31).

In 1975, FDA sponsored a nationwide survey of 1720 oral contraceptive users (Refs. 1 and 35). The women were asked if they would like to receive patient labeling with other prescription drug products. Of the respondents, 93 percent believed it was important to provide patient labeling for antibiotics, 88 percent believed it was important for cough and cold preparations, and 97 percent believed it was important for tranquilizers. Respondents were also asked to compare the brief oral contraceptive leaflet distributed by pharmacists to the longer booklet distributed by physicians, and to give their preference as to which should be provided with other prescription drug products. In response, 67 percent preferred the booklet, 20 percent preferred the leaflet, 7 percent preferred

both, and 5 percent had no preference. In another small survey of oral contraceptive users, 86 percent of the sample said that patient labeling should be distributed with every prescription drug product (Ref. 36) and in a study of 249 outpatients assessing the impact of sample patient labeling for thiazide drug products, 97 percent of the patients said they would like patient labeling for other drug products (Ref. 37).

In a 1978 nationwide survey, 2002 adults were asked if they believed it was important for printed patient labeling to be provided with prescription drug products (Ref. 38). Of that group 64 percent reponded positively, while 33 percent believed that current practices were adequate. This two-to-one preference for patient labeling was consistent across all age, sex, and educational subgroups. Accordingly, although in 1973 only about half the population was in favor of patient labeling for prescription drug products, more recent surveys suggest that at least two-thirds of the population now favors patient labeling. These surveys, however, also showed that consumers do not want patient labeling to replace oral consultations. Thus FDA believes that patient labeling must be viewed as a necessary adjunct to oral communication and not as a replacement for it.

Patients do not comply with prescribed therapy. FDA believes that patient labeling should be required for prescription drug products because the safe and effective use of the products requires that the patient be informed of their benefits, risks, and directions for use and because the patient has a right to know about the products' benefits, risks, and directions for use.

Both drug manufacturers and FDA devote considerable effort to ensure that prescription drug products are safe, effective, and properly labled. This effort is severely undermined, however, if the patient does not use the drug product as the manufacturer and the physician intend. The patient's failure to use a prescription drug product properly may be a major cause for the therapeutic failure of the product, or may cause the patient to experience a serious adverse reaction.

In the past decade, published studies have measured patients' compliance rates with drug treatment programs. The studies have shown that many patients do not properly follow the course of drug therapy prescribed for them. Patients most frequently misuse prescription drugs by failing to adhere to the prescribed regimen; for example, the patient may space doses improperly, fail to take the drug for the period of time necessary for adequate treatment, skip doses, or take extra doses.

Researchers have estimated the extent of patient noncompliance at 30 to 80 percent (Refs. 39, 40, and 41). One researcher reviewed patient noncompliance rates from studies completed before 1970 (Ref. 42). The results of that review are presented in Table 1. FDA's patient prescription drug labeling project reviewed patient noncompliance rates largely from studies completed after 1969. Each study reviewed by FDA included at least 40 patients. The results of that review are presented in Table 2. Another researcher conducted a similar review of patient noncompliance rates for a number of drugs. The results of that review are presented in Table 3 (Ref. 43). These tables show largely consistent 30 to 50 percent mean noncompliance rates by patients for a wide range of drugs. In addition, there does not appear to be any appreciable change in mean noncompliance rates by patients during the years covered by the different studies.

Table 1

Drugs	No. of studies	Percent noncompliance		
		Range	Mean	Median
PAS (para-aminosalicylic acid) and other antituberculoses	20	8-76	38.5	35
Antibiotic	8	11-92	43	50
Antipsychotic	9	11-51	39	44
Other drugs, e.g., antacids, iron	12	9-87	48	57.5

Table 2

Drugs	No. of studies	Percent noncompliance		
		Range	Mean	Median
Cardic	3 (Refs. 44, 45, and 46)	20-45	33	34
Antihypertensive	5 (Refs. 47-51)	24-83	43	33
Penicillin	8 (Refs. 52-59)	11-95	45	38
Other antibiotic	5 (Refs. 60-64)	37-71	52	50
Antituberculosis	4 (Refs. 65-68)	28-53	42	43
Antipsychotic	8 (Refs. 69-76)	19-63	42	48
Multiple drugs	11 (Refs. 77-87)	25-80	60	43
Miscellaneous drugs	6 (Refs. 88-93)	28-89	52	49

Table 3

Drugs	No. of studies	Percent noncompliance, mean
Phenothiazines	5	50
Imipramine	9	40
Lithium	7	36
Meprobamate	3	45
Antihypertensive	8	61
Antituberculosis	14	43
Antiepileptic	4	46
Antibiotic	8	52

Given significant patient noncompliance rates, it is still necessary to inquire whether patient labeling may be expected to improve compliance. It appears that it will. In some cases noncompliance appears to be based on the patient's lack of knowledge about the drug product. For example, patients frequently do not realize that it is important to take all of a prescribed antibiotic even if they begin to feel better. In other cases, although simply providing information may improve compliance, programs to influence motivation and behavior may also be necessary. The agency's patient prescription drug labeling project reviewed studies on the use of written prescription drug information by patients (Ref. 94). The review suggests that written information improves communication of important information to patients. Thus, patient labeling appears to improve compliance if noncompliance results from lack of knowledge. When noncompliance also results from other factors, however, patient labeling may be most useful as part of a larger program to improve compliance.

FDA's Research on Patient Labeling

FDA has begun a research and development program to plan, implement, and evaluate its patient labeling requirements. This program is guided by three basic interrelated questions: (1) What does the patient need to know? (2) What is the best way to communicate this information? (3)

What are the effects of patient labeling? Research studies bearing upon these questions have been completed, others are underway, and more are planned.

FDA completed a national survey in which patients rated the importance of various types of information potentially available for patient labeling (Ref. 33) to gather information on the contents of patient labeling that consumers consider relevant. Patients rated directions for use and information about adverse effects to be most important, and they rated ingredient information and promotional statements (i.e., "how fast it works") least important. To continue to solicit patient opinions, FDA is co-sponsoring a study with the National Institute of Mental Health that will ask patients about the relative importance for patient labeling of various pieces of information. A national telephone survey is also planned to ask patients about their recent experiences in obtaining information about prescription drug products.

FDA has conducted several studies to learn how best to communicate drug information to patients through patient labeling. Current examples of written information for patients about prescription drug products have also been collected and reviewed (Refs. 95 through 121). The agency has also brought together small groups of individuals and conducted focused group interviews. These interviews have given FDA patient perceptions about several models patient labeling leaflets prepared primarily by the agency's staff. Copies of the agency's reports on these group interviews are on file in the FDA Hearing Clerk's office. Group interviews with health professionals using the same models patient labeling leaflets are also planned.

A major experimental study about how variations in selected features of patient labeling (e.g., the amount and type of information, complexity of language, organization of material) affect communication is also currently underway. The Rand Corporation, under contract to FDA, is conducting the study on the following three drugs: erythromycin (an antibiotic), flurazepam (a sleeping pill), and conjugated estrogens. The conjugated estrogen study will evaluate existing patient labeling for those drug products compared to alternative labeling for the products. A copy of FDA's contract is on file in the Hearing Clerk's office.

FDA's review of the literature about written communications to patients is continuing, and the agency is conducting other, nonpatient studies on written communications. For example, one recently completed FDA study focused on how readability tests can be applied in a meaningful way to patient labeling. The agency concluded that readability tests could be used best as a diagnostic tool, but documents should not be written to achieve artificially low readability scores on any one test, because each test sacrificed some other necessary elements of meaningful communication. A copy of the study has been placed on file in the FDA Hearing Clerk's office.

A major emphasis of FDA's research has been to assess the effects of patient labeling on patients. FDA had made that assessment in several ways; for example, through a survey of oral contraceptive users (Refs. 1 and 35), a study of model patient labeling for thiazide drug products (Ref. 37), and a literature review of the effects of locally prepared written communications (Ref. 94). Also underway is a study comparing the effects of model patient labeling for benzodiazepines (minor tranquilizers) with model labeling that discusses prescription drug products in general without specific reference to the effects of benzadiazepines.

Data from FDA's studies have influenced and will continue to influence the patient labeling program. In the future, most of FDA's resources will be devoted to evaluating the direct and indirect effects of patient labeling. The agency's evaluation effort is designed to obtain thorough and objective assessment of several of the initial patient labeling pieces. The agency has contracted with the Institute of Medicine of the National Academy of Sciences to plan this evaluation. Based on the plan obtained from the Institute, FDA will contract for a number of studies to evaluate the impact of patient labeling.

The purpose of the research studies, and particularly the evaluation studies, is to permit FDA to effectively assess how different styles of drug information best serve patients. During the first phase of the implementation of the patient labeling requirements, FDA will collect and analyze data bearing upon this issue. Long range effects of patient labeling will also be measured. The agency of patient labeling will also be measured. The agency also invites other interested parties to fund and conduct investigations into the immediate and long-range, direct and indirect, effects of patient labeling to determine how to maximize the effectiveness of written drug information to patients.

Arguments Against Patient Labeling

FDA has carefully reviewed the arguments for and against patient labeling raised in the comments on the November 7, 1975 notice; in FDA's meetings with consumer, pharmaceutical, and medical representatives; in congressional testimony; and in the professional and trade literature (Refs. 122 through 199). A summary of the more significant objections to patient labeling and the agency's conclusions about them follow:

1. Some comments suggested that patients will make inappropriate decisions about prescription drug products because of patient labeling. Patients will decide not to take the product because of information in patient labeling. Also, patients will give drug products to their friends or relatives and they will try to self-diagnose conditions based upon information in patient labeling.

As previously discussed, FDA believes patient labeling will have precisely the opposite effect. Many patients make inappropriate decisions about the use of prescription drug products. Patients improperly space doses, skip dose, take extra doses, or stop taking the drug product. Rather than contributing to patients' misuse of prescription drug products, FDA believes that patient labeling will reduce the current level of misuse. Patient labeling should in explaining both the importance of taking drug products as directed and the risks of taking them improperly, reduce the current levels of misuse.

The agency responded to the argument that patient labeling will cause patients to transfer drug products or attempt self-diagnosis in the preamble to the final regulation establishing the estrogen patient labeling requirement (see the Federal Register of July 22, 1977 at 37639). FDA is unaware of any evidence that shows that currently required patient labeling for prescription drug products has encouraged patients to give products to others, or has encouraged them to try to self-diagnose conditions based upon the patient labeling information. Nevertheless, to reduce the likelihood of these events, estrogen and oral contraceptive patient labeling under 21 CFR 310.515(b)(8) and 310.501(a)(3)(xvii) currently advises patients that the drug product has been precribed for the particular individual and should not be given to others. A similar statement would be required under these proposed regulations.

2. Some comments suggested that patient labeling will have detrimental psychological effects on patients. For example, information in patient labeling about side effects would cause the

patient to develop the side effect(s) through suggestion. Also, accurate information in patient labeling about the benefits from the use of the drug product may reduce the benefits of the placebo effect that the product may otherwise have had.

The agency does not believe that patient labeling will significantly increase the incidence of suggestion-induced side effects. So called suggestion effects seem to play a minimal role in causing serious adverse reactions. In any event, it is more likely that beneficial effects will result from an explicit statement of side effects in patient labeling. As stated in the preamble to the estrogen patient labeling regulation, clear expectations about the effects of drug therapy, resulting from patient labeling, may make patients more sensitive to and aware of certain physical or psychological reactions. Effects that might otherwise go unnoticed may be identified as drug related. Although this may have the effect of nominally increasing the reported incidence of less serious adverse reactions, at least two studies suggest the incidence of these reactions does not increase (Refs. 200 and 201). Patients may be more sensitive to "warning signals" of serious adverse effects. Accurate expectations may help reduce uncertainty and anxiety about possible effects of treatment. The patient may also be better able to interpret and identify more accurately the cause of drug-induced reactions, and treatments could be on more precise information. Accordingly, the possible positive effects of supplying accurate side effect information substantially outweigh the possible negative ones.

The existing literature on the effects of written information also does not sustain this objection to patient labeling (Ref. 94). Studies that have examined the rate of patient-reported side effects have found no difference between patients who received written information and patients who did not (Refs. 202 through 205). One study, however, found that patients who received information were more willing to report side effects than patients who did not receive the written information (Ref. 206). Although most of these studies were not designed specifically to examine the negative effects of patient labeling on patients' use of prescription drug products, they do not show that patients are more likely to take drug products inappropriately, to engage in self-diagnosis, to give their drug products to others, or to refuse treatment.

An FDA-sponsored study evalutated the effects of a patient labeling piece for thiazides (a class of drugs used to treat high blood pressure) (Ref. 37). The study involved 219 newly diagnosed patients with mild essential hypertension (mild high blood pressure of unknown cause). Two-thirds of the patients were randomly assigned to a group that received the patient labeling and one-third of the patients were assigned to a group that did not receive the patient labeling. Preliminary results do not suggest an increased incidence of adverse effects in the patients who received the labeling. They were, however, better informed about the drug product, and they were not more likely to attribute physical complaints to it. The increased attribution of complaints to the drug product, however, did not lead to a lower compliance rate or more clinical failures (attributable to noncompliance) than in patients who did not receive the patient labeling. Accordingly, current studies do not support the argument that patient labeling will have negative effects on patients' use of prescription drug products. FDA will continue to gather and review data and information on the effects of patient labeling on patients' use of prescription drugs in the development of the patient labeling program.

The agency also does not believe that patient labeling would reduce a drug product's placebo effect. The placebo effect is complicated and not well understood (Ref. 207). Much of the placebo effect appears, however, to be due to the relationship between the physician and the patient. Because the patient would know what effects to expect from the drug and because patient labeling may enhance patient/physician communications, information in patient labeling about the effects of the drug may even increase the placebo effect of a drug product.

3. Some comments contended that patient labeling would affect adversely the legal liability of manufacturers, physicians, pharmacists, and other dispensers of prescription drug products. Those comments were discussed in the preamble to the revision of the oral contraceptive patient labeling regulation published in the January 31, 1978 Federal Register. The conclusions expressed in that preamble, that patient labeling requirements will not affect adversely the civil tort liability of manufacturers, physicians, pharmacists, and other dispensers of prescription drug products have not been refuted.

Whether or not a manufacturer, physician, pharmacist, or other dispenser is to be held liable in given a situation will of course depend upon all of the facts surrounding the manufacture, sale, and use of the drug product and on the nature of the injury. Liability would also depend upon the applicable State law. The agency believes, however, that providing patients with written information about the proper use of a prescription drug product, including information on the benefits and risks the drug product presents to the patient, will result in reduced potential liability. This result is likely not only because patients will receive necessary warnings about the product, but also because the availability of written labeling should improve patient compliance with physician directions and improve patient monitoring of adverse reactions, two factors that may actually decrease drug induced injuries. Patient labeling may also reduce the overall number of malpractice actions, because patients will be more aware that certain risks inevitably accompany drug therapy and that not all adverse effects are caused by deficiencies in the drug product or mistakes by the prescriber.

Finally it would be both inappropriate and unreasonable for FDA to base its patient labeling policy on whether patient labeling affected the legal liability of the manufacturer, physician, pharmacist, or other dispenser of the product. Patient labeling is not intended to define the duty or set the standard of care manufacturers, physicians, pharmacists, or other dispensers owe to the patient who uses the product. Nor is patient labeling intended to serve as a vehicle for obtaining informed consent of patients to the use of a drug product. Patient labeling will be required solely because of its positive effects, to supplement the information which it is the traditional responsibility of physicians, pharmacists, and other dispensers to provide to patients. Although the labeling may have an impact upon the civil liability of manufacturers, physicians, pharmacists or other dispensers, that impact will likely be in keeping with traditional notions of legal responsibility.

4. Other comments argued that patien labeling for prescription drug products would interfere in the patient/physician relationship. These comments suggest that patient labeling would increase inappropriately the number or length of patient/physician contacts because patients will need added reassurance about taking a prescription drug produc will be alarmed by the information, and will ask unnecessary questions. Patient: will lose confidence in their physician's

judgment, particularly if a physician's statements conflict with statements in the labeling. Also, physicians may rely solely on the patient labeling to inform patients about the drug product and, thus, discontinue current patient/physician dialogues. Finally, it is argued that physicians will not prescribe useful drug products because they object to or disagree with information in the patient labeling that would be dispensed to the patient.

Patient labeling is not intended to be the sole source of information for patients about prescription drug products. The agency hopes that in most cases it will merely restate and reemphasize the information the physician has told the patient when the product was prescribed. In those cases, it should not alarm the patient any more than the oral information that the physician gives the patient, nor should it significantly increase the length or number of patient/physician contacts. Patient labeling will not relieve the physician of the responsibility to inform the patient about a prescribed drug product. As the use of patient labeling increases, physicians should learn to anticipate patient inquiries and introduce the patient labeling for a drug product in a manner that will minimize patient questions. Furthermore, patient labeling may help patients to ask clearer questions than they now commonly ask, so that physicians can respond to them more easily. The FDA survey of oral contraceptive users (Ref. 1) found that only 12 percent of women using oral contraceptives who said they read the patient labeling also said that it raised questions that caused them to contact their physicians. Many of these questions were related to effects not mentioned in the labeling, but experienced by the patient, e.g., spotting, bleeding, breast soreness, and weight gain. Moreover, added patient/physician contact is not necessarily a bad result of patient labeling. It is likely to result in a patient population that is better educated about drug therapy, and more likely to comply with physicians' drug therapy efforts. The agency believes that situations in which patient knowledge is incomplete are more likely to add unnecessarily to the amount of patient/physician contact. The information provided by patient labeling, which will be of significant breadth, may then have precisely the opposite effect suggested by the comments.

5. Manufacturers, distributors, and dispensers of drug products have also objected to the economic impact of a general pateint labeling requirement. They foresee significant costs from a patient labeling program, including the initial cost of printing the patient labeling pieces, distributing them to pharmacies with the drug product, and the costs to pharmacists of storing and distributing the labeling when the drug product is dispensed.

Because these proposed patient labeling requirements may have significant economic consequences for some persons involved in the manufacture, distribution, and dispensing of prescription drug products, FDA has analyzed the economic consequences of these proposed requirements and several alternatives. A draft regulatory analysis prepared under Executive Order 12044 has been placed on file in the FDA Hearing Clerk's office. A copy of the draft regulatory analysis may be obtained from the Hearing Clerk. FDA will prepare a final regulatory analysis based on comments received on the draft analysis. The final regulatory analysis will be made available when final patient labeling regulations are published. Based upon the draft regulatory analysis, the agency believes that the economic impact of these proposed requirements is acceptable in view of the anticipated benefits to patients.

The draft regulatory analysis considered the following alternatives to the patient labeling requirements that are proposed in this notice: The required distribution of patient labeling with a new prescription but not refills of that prescription, a requirement that copies of patient labeling be placed on display in each pharmacy but not distributed, the establishment of requirements for patient labeling on a case-by-case basis instead of a general program applicable to most prescription drugs, and the required distribution to patients of the physician labeling for the drug product required under 21 CFR 201.100(c). The draft analysis concludes that the potential economic savings each of these alternatives would permit do not outweigh the benefits to patients from patient labeling they would receive under the comprehensive information system here proposed.

6. Comments suggested that FDA should not be responsible for establishing regulatory requirements for a patient labeling program, nor for regulating the content of individual patient labeling pieces. The comments suggested that, because FDA is a regulatory agency, it would produce unbalanced patient labeling that would stress the risks of drug therapy and not its benefits. The comments also suggested that FDA lacks the expertise to determine the appropriate content and format of patient labeling.

Although a consensus about what would be balanced labeling for a particular drug product would be difficult to obtain, a balance can be struck in patient labeling between emphasizing the benefits from use of a drug product and discussing its risks. Through the approval of labeling for new drugs and the monitoring of drug labeling in general, FDA has accumulated considerable experience in balancing those interests for physician labeling for prescription drug products, as well as for consumer labeling for over-the-counter drug products. Although the content and format of patient labeling would properly differ from that of physician labeling, the interests that must be balanced are quite similar. Additionally, through patient labeling FDA hopes to encourage a dialogue between patient and physician and patient and pharmacist in which patients' questions about drug products and drug therapy can be answered. Also, patient labeling will encourage patients to consult physicians if adverse effects are experienced, rather than acting on their own. By promoting patient reliance on physicians and pharmacists, patient labeling should offset any suspected agency bias in favor of emphasizing a drug product's warnings or adverse effects. Accordingly, FDA does not believe that patient labeling, even labeling prepared under the auspices of the agency, will necessarily be unbalanced by emphasizing adverse effects over benefits.

Moreover, FDA has the expertise to determine and to monitor the appropriate content and format of patient labeling. For many years, FDA representatives have participated in numerous activities, including meetings, seminars, and workshops, designed to explore fully the potential of a broad patient labeling program. In addition the agency has supported and conducted research into the use of specific labeling for prescription drug products, including prescription drug products for which patient labeling currently is required by regulation. Accordingly, FDA, as the Federal agency charged with ensuring the safety and effectiveness of drug products, not only has the responsibility to establish and implement the patient labeling program for prescription drug products, but also is particularly qualified to do so.

As more fully explained elsewhere in this preamble, the agency has also invited, and will continue to invite, public participation in the establishment

and implementation of an FDA required patient labeling program for prescription drug products. FDA will discharge what it views as its responsibility to promulgate a patient labeling program for prescription drugs in an open manner that will allow full participation by all persons interested in the program.

Scope of This Proposal

This proposed labeling program for prescription drug products is intended to be part of an overall agency plan to provide information to consumers about products regulated by FDA. Patients would also benefit from receiving information about the uses, benefits, and risks of medical devices. Differences in statutory authority and the nature and use of regulated products, however, require different regulatory approaches to provide this information. Unlike most prescription drug products the clinical conditions in which medical devices are used differ widely. Many nonexpendable medical devices, such as general purpose x-ray machines, are used for a large variety of diagnostic examinations. Because of the many different uses of a medical device, patient information on the device may need to be tailored to procedures for which the device is used, instead of being, as in the case of drug products, a single comprehensive information piece dealing with all approved uses. In addition, some devices are used solely by health professionals and are not contacted independently by patients. Information about those devices may not be useful to patients. Accordingly, the agency is separately formulating general criteria on when patient information is most needed for medical devices. These criteria will be based on a review of the appriateness of a variety of mechanisms to inform patients about the uses, benefits, and risks from some medical devices. They are not included in this proposal but will be proposed for public comment in a future issue of the Federal Register.

Since FDA began developing these proposed regulations for prescription drug products, information leaflets have been required to be provided to patients with certain products, such as oral contraceptives and estrogenic drug products. Those leaflets have been called among other things, "patient package inserts (PPI's)," "patient labeling," and "labeling directed to the patient." Comments have objected to use of some of these terms. Some comments objected to the term "patient" because some prescription drug products are dispensed to persons who are not considered patients, for example, healthy women who take oral contraceptives. Other comments objected to the term "package insert" because many drug information leaflets are not literally inserted into the package that is dispensed. Yet other comments objected to the term "patient labeling" because it suggests to them that information is written about and placed upon the patient, instead of being prescription drug information that is about and accompanies the drug product and is directed to the patient.

The agency has also received comments suggesting alternative terminology, such as "user information" or "consumer information." Those alternatives, however, may also have drawbacks. The term "user information" is vague and does not clearly communicate the purpose of the information or its intended audience. At the same time, FDA believes the term "consumer information" connotes information less important than that contained in patient labeling. It has been used in other contexts, for example, to describe comparative qualities of competing products to help purchasers. It is inevitable that a shorthand phrase for this labeling will develop among persons in FDA, the industry, and other groups or organizations that most frequently deal with the subject. Accordingly, in this preamble and in the proposed regulations, the agency has adopted the term "patient labeling" to describe this information.

The Proposed Regulations

The proposed regulations set forth general patient labeling requirements that would apply to most prescription drug products. The regulations would require the manufacturer of the product to prepare and distribute patient labeling that physically accompanies the product. The labeling would be written in nontechnical language, would not be promotional in tone or content, and would be based primarily on the physician labeling for the drug product. The patient labeling would contain both a summary of information about the product and more detailed information that identifies the product and the person responsible for the labeling, the proper uses of the product, circumstances under which it should not be used, serious adverse reactions, precautions the patient should take when using the product, information about side effects, and other general information about the proper uses of prescription drug products. The agency would be permitted to exempt the labeling for a particular drug product from any of the specific requirements. The regulations would also establish minimum printing specifications for patient labeling.

FDA would make available guideline patient labeling for many prescription drug products. The manufacturer would be required to provide sufficient patient labeling pieces to the dispenser of a prescription drug product and the dispenser would be required to provide the labeling to the patient. Distributors or dispensers would be permitted, however, to prepare "generic" labeling. Although patient labeling would be required to be distributed to the patient with the drug product, certain exemptions from that requirement would be permitted for a drug product that is dispensed to (1) a patient who is legally incompetent, (2) a patient whose primary language is not English or a patient who is blind, (3) a patient whose physician directs the dispenser to withhold the labeling, (4) a patient in the course of emergency treatment, or (5) an institutionalized patient.

The requirements will be implemented gradually to permit health professionals the opportunity to become familiar with them and to permit the systematic gathering of both objective evaluations and clinical experiences of patients and health professionals. FDA intends to implement the patient labeling requirements in two phases. During the first phase FDA, its contractors, and drug manufactures would draft guideline patient labeling for approximately 50 to 75 drug products and drug classes. Before beginning the second phase, FDA would thoroughly evaluate the progress and effects of required patient labeling. The agency would also carefully review the necessity and usefulness of FDA guideline labeling. By that time the agency, drug manufacturers and distributors, and drug dispensers would be more familiar with the requirements. During the planned second phase of the program the agency would merely schedule the effective dates of the patient labeling requirements for the remaining prescription drug products. Responsibility for preparing patient labeling would then shift to drug manufacturers.

The agency has contracted with the Institute of Medicine of the National Academy of Sciences to help plan a program to evaluate the potential requirements. The patient labeling program and the standards for the content of the labeling may be revised on the basis of this evaluation, and of experience gained after the labeling program is underway.

Definintions. The regulations would provide definitions for several terms

used throughout the proposed regulations. Because these terms may have different meanings in other contexts, specific definitions for them will aviod confusion in applying the proposed regulations. The definitions generally follow the definitions of the same terms in section 102 of the Drug Regulation Reform Act of 1979, S. 1045, 96th Cong., 1st Sess. (1979)) (the Drug Reform Act). These definitions are properly used in the proposed labeling regulations because they are clear and concise, and they will eliminate confusion in the interpretation of the regulations and because it is desirable to make the proposed patient labeling regulaions as compatible as possible with the potential statutory requirements. The Drug Reform Act would specifically require patient labeling for most prescription drug products, thus making these definitions particularly appropriate to these proposed regulations. The more significant definitions are discussed in the following paragraphs.

The term "dispense" would mean the act of delivering a prescription drug product to a patient or an agent of the patient. The definition of the term "dispense" does not include the delivery of a nonprescription drug product, or the compounding, packaging, and labeling of a drug product incident to preparing it for delivery to a patient, both of which are included in the Drug Reform Act's definition of dispense. Those parts of the Drug Reform Act's definition do not apply to the dispensing of drug products to which the patient labeling requirements would apply.

The term "drug product" would mean a drug that contains the active drug ingredient alone or combined with one or more components in a finished dosage form capable of being dispensed to a human (except for packaging, labeling, and any final manipulation required immediately before dispensing). The definition specifically includes biological products licensed under the Public Health Service Act of 1944 (42 U.S.C. 262) and regulated by FDA's Bureau of Biologics. Biological products are also human "drugs" as that word is defined in setion 201(p) of the act (21 U.S.C. 321(p)). Biological products and their manufacturers are thus subject to both section 351 of the Public Health Service Act and the human drug provisions of the Federal Food, Drug, and Cosmetic Act.

Although the proposed drug product definition differs somewhat in wording from that contained in FDA's existing bioavailability and bioequivalence regulations (21 CFR 320.1(b)), and its current good manufacturing practice (CGMP) regulations (21 CFR 210.3(b)(4), published in the Federal Register of September 29, 1978 (43 FR 45014)), FDA views the proposed definition for the patient labeling requirements to be synonymous with the definitions in each of those regulations. One exception is that, unlike the definition in the CGMP regulations, the proposed definition would not apply to a placebo.

The term "manufacturer" would mean a person who manufactures a drug product. The definition of manufacturer in these patient labeling regulations would not affect, however, the requirements for the identification of a manufacturer on the label of a drug product under § 201.1 (21 CFR 201.1).

The term "pharmacist" would mean an individual who may legally dispense prescription drug products, and the term "practitioner" would mean an individual who may legally prescribe prescription drug products. In this preamble, the prescriber of a prescription drug product is generally referred to as a physician because most prescribers are physicians. Other health care professionals, however, may legally prescribe prescription drug products. Accordingly, the term "practitioner" is used in the regulations to make it clear that the proposed requirements would apply to all prescribers, whether or not they are physicians.

General requirements for patient labeling. The proposed regulations would establish general requirements for the content of patient labeling for prescription drug products, including biological products for human use. Patient labeling would be required to be written in nontechnical language and in a nonpromotional tone; it would be based primarily on physician labeling required for the drug product under § 201.100(d) (21 CFR 201.100(d)).

A requirement that patient labeling be written in nontechnical language and that it be nonpromotonal in tone provides, at best, an imprecise standard. It is important, however, to prohibit the use of patient labeling, which is intended to provide important drug information to a lay audience, as a means of promoting the use of precription drug products.

The contribution that patient labeling makes to the patient's safe and effective use of prescription drug products depends to a significant extent upon whether the labeling is understandable, informative, accurate, and precise. Health care concepts that patient labeling is intended to provide to patients, particularly those concepts involving the safe and effective use of prescription drug products, are essentially the same concpets commonly communicated in physician labeling, for example: (1) the benefit-to-risk assessments applicable to the use of a prescription drug product, (2) the therapeutic importance of closely following the drug regimen, and (3) the significance the patient should attach to both beneficial and adverse effects from the product. Many of those concepts, however, are difficult to convey to persons who lack professional training or experience in the use of prescription drug products. Patient labeling, no matter how simply written, may still be unable to convey all of those concepts to all individuals. Thus, in writing patient labeling, the information the labeling contains and the language used must be carefully considered to provide the most useful information to patients.

The agency considered establishing a minimum reading level for patient labeling. FDA's review of readability concepts revealed, however, that reading tests may be unreliable when applied to patient labeling, and patients may become dissatisfied with written information that is prepared at a very low reading level. A copy of a report on FDA's review has been placed on file in the Hearing Clerk's office. Nevertheless, the agency will continue to insist that technical information about prescription drug products be simplified to address a lay audience. Those individuals who desire labeling with more information, and in greater detail, than the patient labeling provides may ask their physician or pharmacist for a copy of the professional labeling that accompanies the drug product.

In addition, there are other large segments of the population who would not benefit from patient labeling required under these proposed requirements. For example, individuals whose primary language is not English and some handicapped persons, such as the blind, may only be served by patient labeling that is written in a language other than English or in a different format, such as braille. To require the preparation and distribution of patient labeling in languages other than English, however, would add significantly to the economic effects of these patient labeling regulations. The additional labeling would increase production as well as distribution costs and present other problems, particularly in determining to which areas of the country it should be sent. The literal translation of the English language patient labeling into another language also may not produce a useful patient labeling text. Accordingly, FDA is not

prepared at this time to propose regulations that would require the production and distribution of non-English or special format patient labelings. However, the agency proposes to permit but not require manufacturers, distributors, and dispensers of prescription drug products to produce and distribute patient labeling in a language other than English or in braille. Manufacturers and distributors would be permitted to provide the non-English and special format patient labeling in addition to the English labeling. Unlike the English labeling, however, the non-English and special format labeling would not be required to accompany the drug physically, but could be shipped separately. For example, Spanish language patient labeling could be directed to areas such as New York, Miami, and the southwestern United States, where large Spanish speaking populations exist. In the Commonwealth of Puerto Rico or in a territory in which the predominant language is one other than English, however, manufacturers, or distributors may completely substitute labeling in the predominant language for the English labeling (21 CFR 201.15). The agency encourages comments and suggestions on ways to promote further the distribution of non-English patient labeling.

Patient labeling for a prescription drug product would be required to be based primarily on the physician labeling required for the product under § 201.100(d). Physician labeling for a prescription drug product provides the information the physician needs to prescribe the product under conditions that will maximize the product's safety and effectiveness. Physician labeling is a dependable source of information about the use of the product, including its indications, effects, dosages, routes, methods, and frequency and duration of administration, and any relevant warnings, hazards, contraindications, side effects, and precautions, and thus, provides the best source of information for patients about the safe and effective use of the drug product.

As a legal matter, statements in patient labeling cannot conflict with statements in physician labeling without misbranding the drug product. At the same time, the proposed requirements recognize that there may be substantial differences between the physician and patient labeling for a particular product. For example, the patient labeling, may not discuss each of the subjects discussed in the product's physician labeling; and may not contain as thorough a discussion of a subject as the physician labeling. On the other hand, some information that does not appear in physician labeling may be required to appear in patient labeling, such as the consequences of the patient's failure to follow the prescribed regimen. Although that information may be well know to physicans, patients may be unaware of it unless it appears in patient labeling. Accordingly, although patient and physician labeling will be held to the same legal standards (that is, neither may be false or misleading), the application of the standards may differ.

Information required in patient labeling. There are significant differences between the indications, warnings, adverse reactions, and other information that patient labeling will convey for different drug products and classes of drug products. These patient labeling regulations through the use of general requirements that can be applied in practice to most prescription drug products contain sufficient flexibility to meet these objectives. As FDA's experience in patient labeling increases, more specific requirements may be proposed. To that end, FDA intends to continue to collect and make publicly available information on drafting and using patient labeling from which decisions about the most appropriate form and content of labeling can be made.

Under the proposed regulations, patient labeling would be required to contain a summary of the essential information for patients about the use of the drug product. This information would include the drug's indications (that is, the conditions for which the drug may be legally marketed), the contraindications to the use of the drug product (that is, the conditions under which the drug should not be used), the serious adverse reactions and potential safety hazards that may arise from the use of the product, and a statement recommending that the patient carefully read the full patient labeling information.

As explained more fully below, the summary may be omitted from shorter patient labeling pieces. For longer patient labeling, the summary is intended to provide patients with a clear and concise statement of the more important information about the drug product even though the information is repeated in the more detailed portion of the labeling. Some patients may find the full patient labeling too long and too comprehensive for their needs. In addition, if important information is emphasized in the summary and repeated in the full patient labeling, patients may be more likely to recognize the importance of the information and be better able to remember it. Placing important information in a summary that precedes other more detailed information is consistent with the previously discussed literature that suggests that patients remember what they are told first.

Following the summary, patient labeling would be required to include more lengthy and detailed information about the drug product. Because the importance of specific items of information may vary among drug products and because the best format for presenting patient labeling information to patients may vary for different drug products, the information would not be required to appear in a specific format. The agency, however, requests specific comments about whether a uniform format should be required.

Identification of the drug product. Patient labeling would be required to identify the name of the drug product and the company or organization responsible for the labeling. If the labeling applied to only on drug product, it would be required to bear the product's established name. The labeling may also bear a manufacturer's or distributor's brand name for a product, in addition to its established name. Because some drug products may not have an established name, the proposed regulations would permit those products to be designated solely by a brand name.

The established name of the drug product is commonly referred to as its "generic" name. Because most drug products that are manufactured by several different companies have the same established names, patients who may receive different manufacturer's brands of a drug product will be assured of receiving patient labeling identifying the product as the same drug. Also, because patients are generally unfamiliar with prescription drug products' names, the agency encourages manufacturers to include a pronunciation guide for the brand name, established name, or class name, as appropriate.

The patient labeling regulations would also be applied to drug products on the basis of the class to which the drug products belong. In such cases, "class labeling" would be established for a number of similar drug products that may have different established names. The current patient labeling for estrogenic, oral contraceptive, and progestational drug products are examples of class labeling. Class labeling would be permitted only for those drug products for which FDA

establishes a class labeling guideline. Class labeling would present an advantage to dispensers, because it would permit them to store and dispense the same patient labeling for several different drug products.

Patient labeling would also be required to contain a statement of the route of administration of the drug product, if it is not for oral use, and the name and place of business of the manufacturer or distributor as required for the label of the drug product under § 201.1 (21 CFR 201.1). The name and place of business of the dispenser, if it appears in the labeling, would be required to be stated as required for the packer or distributor under § 201.1. That information would permit easy identification of the company or business responsible for the labeling.

Patients often have several different prescription drug products in their homes, and they may have prescriptions filled for several different drug products at the same time. Accordingly, a mechanism is needed to help the patient match the drug product to the correct labeling. The regulations would require that the dispenser establish and follow a procedure that would ensure that the patient can match the correct patient labeling piece with the drug product. Acceptable procedures would require the prescription number to appear on the patient labeling piece, or require the name of the drug product, as stated in the patient labeling, to appear on the drug product's customized label that the dispenser affixes to the product when it is dispensed. The dispenser of the drug product can easily apply the prescription number to the patient labeling, or apply the drug product's name to its label, when the drug product is dispensed. A drug product marketed in a unit-of-use package would generally comply with that requirement.

Although the proposed regulations would apply to individual drug products, they would permit, but not require, dispensers to use uniform or "generic" labeling for all members of a class of drug products and for all brands of a particular drug product. Generic labeling would relieve some of the difficulties dispensers would face in storing, collating, and distributing a large number of individualized patient labeling leaflets that differ from one another only with respect to the brand name and a description of the drug product. The use of generic labeling by those dispensers who find it useful would significantly reduce the dispenser's burden, a consideration that may outweigh the benefits to the patient of patient labeling that only applies to a specific drug product. Manufacturers, distributors, or dispensers may also prepare a single patient labeling piece for all dosage forms (e.g., oral, injectable, suppository) of a drug product, Each dosage form must be identified and information about it provided in the labeling.

There are some advantages, however, to the use of product-specific labeling. It would describe the drug product and identify its name and source. That information may help dispensers update or recall labeling and may provide some assurance that a specific manufacturer's labeling will be dispensed with its drug product, a consideration that may be important to some manufacturers and dispensers. Drug product specific labeling may also benefit patients to the extent that they would receive a written physical description of the drug product, which may help them identify the drug product and coordinate it with the patient labeling. The proposed regulations would clearly permit product-specific patient labeling. The proposal, however, would also permit the use of uniform or generic patient labeling because of its benefits to distributors and dispensers.

Indications for use. Patient labeling would be required to contain a statement identifying the major indications for use of the drug product, that is, the uses identified in the physician labeling and for which the drug product may be legally marketed. Patient labeling would not be required to identify all of the indications contained in the physician labeling and, thus, indications for which a drug product would be prescribed rarely might not be included in patient labeling for the drug product. As discussed more fully below, the proposal would permit FDA to exempt patient labeling from certain patient labeling requirements. An exemption would apply when, in FDA's view, less than all of the drug product's indications are necessary in the drug product's patient labeling. In addition to its indications, if it would be helpful for patients to know how a drug product works, the labeling would be required to contain a brief statement about the action of the drug product, if it is known.

Patient labeling that identifies less than all of the indications contained in the physician labeling would still be appropriate for the patient who is prescribed the drug product for an indication that is not identified in the labeling. The other information in the labeling, such as that for adverse effects, would still be pertinent.

Some prescription drug products may have several major indications, each of which calls for different kinds of information in patient labeling. In other cases, patient labeling containing information about all of a drug product's major indications might be too lengthy and confusing. The problem presented by patient labeling that emphasizes one indication of a drug product over another has already arisen with regard to estrogenic drug products. Because the estrogen patient labeling is inappropriate for male patients, the agency proposed in the Federal Register of April 17, 1979 (44 FR 22752), to amend the regulation so that it would not apply when the drug product is dispensed or administered to a male patient. One resolution of the problem under the proposed regulations is to permit the physician to direct that the dispenser withhold the patient labeling. Nevertheless, comments and sugggestions are requested about other ways that indication-specific labeling can be provided to appropriate patients.

Under the proposed regulations, the agency would be able to require that the patient labeling for a particular drug product or class of drug products state that there is a lack of evidence of effectiveness of the product for an indication, if there is a common belief among patients or physicians that the drug product is effective for that indication, but the preponderance of the evidence related to the indication suggests that the drug product is ineffective for that use. Drug labeling does not always contain the most current information and opinion available to physicians about a drug product. Advances in medical knowledge and practice concerning a drug inevitably precede formal labeling changes that reflect the new information. Thus, good medical practice and patient welfare require that physicians remain free to use drug products according to their best knowledge and judgment. Nevertheless, in some cases the common use of a drug product for an indication not found in physician labeling continues despite evidence that the drug product is not effective for that use. Accordingly, when evidence is available to FDA that physicians or patients consider a drug product to be effective for an indication not identified in the physician labeling, despite a preponderance of evidence that the drug product is not effective for that use, the patient labeling would state that the drug product has not been shown effective for that indication.

Contraindications to use. Patient labeling would be required to identify

the conditions under which the drug product is not to be used for its labeled indications, that is, the contraindications to the use of the product. The patient labeling would contain in nontechnical language the information contained in the contraindications section of the physician labeling for the drug product. This information would advise the patient whether specific items in his or her medical history would lead the physician not to prescribe the drug product. For example, the drug product may be contraindicated if the patient has previously had an allergic reaction to it, if the patient is pregnant, if the patient is taking certain other medication, or if the patient has a condition of which the physican was unaware.

Serious adverse reactions and potential safety hazards. Patient labeling would be required to contain a statement of the serious adverse reactions and potential safety hazards that may result from the use of the drug product. This information would be a restatement in nontechnical language of the information contained in the warning section of the physician labeling. Under the proposed regulations FDA could require a warning statement in patient labeling about an adverse reaction from a use not included in the indications section of the labeling, if that use of the drug product were associated with a serious risk or hazard. Patient labeling, however, would generally contain statements of serious adverse reactions and potential safety hazards about the use of the drug product only for its labeled indications.

The agency could also require patient labeling to disclose certain serious adverse reactions or safety hazards in a prominently displayed box, in boldface type, or to emphasize them in some other fashion. Such "boxed warnings" would generally be used to call attention to similar warnings in physician labeling. For example, § 310.501(a)(2)(v) (21 CFR 310.501(a)(2)(v)) requires patient labeling for oral contraceptive drug products to contain a boxed warning about cigarette smoking and oral contraceptive use. The drug product would be misbranded if the patient labeling did not bear a required boxed warning.

Precautions for patients. Patient labeling for a prescription drug would also be required to contain precautionary information for the patient about the proper use of the drug product. These precautions might include activities the patient should avoid while taking the drug product, such as driving or sunbathing, or a list of other drugs, foods, or other substances the patient should avoid because of possible interaction with the drug product. This information would obviously help patients use the drug product under conditions that would promote both the safety and the effectiveness of the drug product.

Patient labeling would be required to contain a discussion of the risks to both a pregnant woman and the unborn child from the use of the drug product during pregnancy, labor, and delivery. The labeling would also describe the long-term effects of the drug product on the child, if they are known.

All drug products with the potential for use in pregnant women would be required to bear labeling that discusses any risks to the pregnant woman and her unborn child, including any long-term effects. Information about the use of a drug product during labor or delivery, however, would be limited to those drug products that have a recognized use during labor or delivery. A recognized use would include common and widespread use of the drug product during labor or delivery, whether or not the product were specifically labeled for that use. A drug product that is not labeled for specific use during labor or delivery may still be so used.

Patient labeling would also be required to contain the following precautionary information: (1) information about excretion of the drug in human milk and its risk to a nursing infant, (2) information about risks to pediatric patients or other identifiable populations from the use of the drug product, and (3) information about the carcinogenicity, mutagenicity, or the effects on reproduction of the drug product.

Information about adverse effects. Patient labeling would be required to list and describe frequently occurring adverse effects from the use of the drug product. The list would be required to characterize and summarize the effects in a manner that would help patients understand and remember them. In practice, methods of organizing this information for various drug products might differ. For example, adverse effects might be organized by the organ systems in which they occur, by their severity, by the frequency with which they occur, by preventative or curative actions the patient may take if they occur, by any combination of these categories, or by any other appropriate method that would provide patients with the information. Wherever possible the approximate frequency with which the adverse effects occur should be stated. Finally patient labeling would also be required to identify the risks, if any, of the patient developing a tolerance to or a dependence upon the drug, and describe what the patient should do in case of an overdosage or if a dose is missed.

Storage and handling information. If a drug product requires special handling and storage conditions to maintain its quality after it has been dispensed to the patient, the patient labeling for the drug product would also be required to contain information about those conditions. For example, if a drug product must be refrigerated, kept in an air-tight container, or not exposed to direct sunlight, the patient labeling would be required to provide that information to the patient.

Additional required information. Patient labeling would be required to contain other information. A statement would be required informing the patient that the drug product has been prescribed for the sole purpose of treating the patient's condition and must not be used for other conditions or given to other individuals. Another statement would inform the patient that the safety and effectiveness of the drug product depend upon the patient taking it as directed. A third statement would stress to the patient the importance of not using the patient labeling to self-diagnose other conditions or to use the drug product for any purpose other than the purpose for which it was prescribed. The net effect of these statements would stress to the patient that the use of a prescription drug product is a serious matter and that it is ultimately the patient's responsibility to comply with the prescribed treatment.

The patient labeling would also be required to contain a statement that the physician labeling for the drug product (required under § 201.100(c)(1) (21 CFR 201.100(c)(1))), that is, the drug product's "package insert" is available from the patient's pharmacist or physician. Many persons, including some pharmacists and physicians, erroneously believe that State or Federal law prohibits providing a drug product's official package insert to patients. No such prohibition exists. Moreover, the package insert for a drug product provides the most detailed and comprehensive information about prescription drug products and should be available to any patient who desires it. FDA routinely provides copies of the drug product's package insert to any person who requests it. Although the package insert for a drug product may be too technical for most patients to easily understand, patients should not

be denied access to this information. Pharmacists and physicians are able to answer questions about the labeling and thereby reduce the amount of confusion produced by its technical language.

Finally, patient labeling for a drug product would be required to contain the date, identified as such, of the most recent revision of the labeling. The date would be prominently placed immediately after the last section of the labeling. The date the patient labeling was issued or revised would advise patients, pharmacists, and physicians of how current the labeling is, and will facilitate the replacement or recall of old labeling. Placing the revision date at the end of the labeling conforms to the practice of many manufacturers in dating physician labeling.

Exemptions from specific patient labeling requirements. The regulatory requirements for patient labeling are intended to be exhaustive as to information to be given to patients. Nevertheless, to require patient labeling for all drug products to contain a summary and each detailed item of information required by the regulations may not be necessary. Accordingly, the proposal would permit FDA to exempt patient labeling for certain drug products from some requirements. An exemption would be allowed if the information were clearly inapplicable to the drug product or its intended patient population, or the agency concludes that the information would otherwise not be necessary for the protection of the public health. The amount of information the labeling contains would also be considered. If too much information is included in patient labeling, patients may not read the labeling, or if they do read it, they may find it too difficult to remember the most important information. Under the proposed regulations, the agency's conclusion that certain information need not appear in the patient labeling for a particular drug product could be expressed by the recommended labeling text that FDA would make publicly available as a guideline under § 10.90(b) (21 CFR 10.90(b)). A person might also request an advisory opinion from the agency under § 10.85 (21 CFR 10.85) about whether certain information may be omitted from the patient labeling of a drug product or class of drug products. An exemption would also be available if approved under section 505 of the act and Part 314 as part of an approved NDA for the drug product.

An exemption would depend upon the applicability of the information to the patient's choice or use of the product. For example, some prescription topical cream drug products may not require in their labeling a statement of activities, drugs, foods, or other substances a patient should avoid when taking the drug product or information on risks from the use of the drug product during pregnancy, labor, delivery, or nursing if the product is not absorbed systemically. The labeling of other drug products may not require other items of information. Most patient labeling, however, would be required to contain most of the required information, because most of the items of information would be important to the patient's use of the product.

Minimum Printing Specifications

An objective standard for the size of type used in patient labeling is needed to ensure that most patients will be able to read the labeling. Accordingly, the regulations would require a minimum letter height of 1/16 inch, which would be measured on the lower case letter "o". The body copy would not be permitted to contain condensed type or less than one-point leading (the space between the lines). Lightface type and small captial letters would also be prohibited.

These proposed requirements clarify existing requirements for patient labeling for oral contraceptive and estrogen drug products which although unclear, are intended to require one-point leading as a minimum for line spacing. The proposed regulations also require the minimum letter height to be based upon the lower case letter "o" instead of permitting a letter height to be based upon a lower case letter equivalent to "o", as provided in the oral contraceptive and estrogen patient labeling requirements. That revision will avoid confusion about what may be an equivalent letter to the lower case letter "o" and the revised requirement would be adequate to ensure that legible labeling is obtained. The agency encourages persons responsible for the printing of patient labeling to take other steps to make patient labeling as legible a possible. These proposed printing specifications would be minimum requirements and manufacturers would be free to use larger type, graphics, layout, and other techniques that would produce patient labeling that can be easily read.

Implementation of the General Patient Labeling Regulations

Although these general patient labeling regulations would ultimately require patient labeling to be dispensed with most prescription drug products, FDA intends to implement the regulations gradually. The agency intends to publish in the Federal Register the draft and final patient labeling guideline texts for approximately the first 10 drug products to which the regulations will apply. After the first group of guideline texts, FDA intends to publish a notice of availability of the draft and final guideline texts for products to which the regulation would be applied during the remainder of Phase I of the implementation schedule, approximately 50 to 75 drug products and drug classes. In either case, the intial Federal Register notice for each product or class will describe the draft guideline and ask any interested person to submit written comments on it for consideration in determining whether it should be revised before being developed as a final guideline text. The notice of the draft guideline will provide generally 60 days in which interested persons may submit comments on the guideline, but the notice may provide for a shorter comment period. All comments received on a draft guideline will be carefully considered, but FDA is under no legal obligation to reply publicly to the comments received on a guideline, and to do so would substantially delay making the guideline effective. After FDA reviews the comments, it will publish a final guideline labeling text. The requirement for patient labeling for a drug product, however, would not be final until the availability of the final guideline labeling text is announced in the Federal Register. That notice would also give a date in the future (generally 120 days after the date of publication in the Federal Register by which the product or class of products would be required to comply with the patient labeling regulations. The notices would not solicit comments about whether the patient labeling requirements should be applied to the product nor would they provide an opportunity to comment on that issue. Notice and opportunity to comment are not necessary because this proposal, when finalized, would require patient labeling for all prescription drug products. Each subsequent notice would simply announce a date when the regulations would be effective for a specific drug product or drug class and would provide sufficient time for preparing and distributing the labeling. Persons responsible for the patient labeling may rely upon the final guideline patient labeling text to meet the specific regulatory requirements. The status of an FDA guideline is described in § 10.90(b).

In sum, the final guideline patient labeling text represents that labeling

which FDA believes would comply with the general patient labeling regulations. Manufacturers may deviate from the text of a published guideline as long as the labeling text provided to patients still conforms to the patient labeling regulations. Significant deviation from a guideline, however, such as the omission of a warning or other significant information, would not be viewed as compliance with the regulation.

FDA will establish and incorporate in the regulations a list of drug products or drug classes for which guideline patient labeling has been published. The list and copies of guideline patient labeling will be available from the Hearing Clerk (HFA-305), Food and Drug Administration, Rm. 4-65, 5600 Fishers Lane, Rockville, MD 20857.

Preparation of guideline patient labeling. The agency has used various methods for developing the content of patient labeling that is currently required. It has used notice and comment rulemaking to develop the actual labeling text for certain intrauterine devices used for contraception that are considered to be drugs (21 CFR 310.502). It has also developed labeling content through a combination of regulations and guideline labeling for oral contraceptives and estrogens for general use (21 CFR 310.501(a) and 310.515). As new patient labeling requirements are implemented, the agency will continue to examine various methods for developing patient labeling. Several organizations and groups have been considered as potential drafters of patient labeling, including some non-governmental organizations. Using standard Federal procurement practices, FDA intends to request contract proposals from interested persons for drafting guideline patient labeling texts. To ensure that a contract for drafting the guideline texts is awarded to the most qualified person, FDA will ask potential contractors to draft model patient labeling for five different drug products. The products will be chosen to represent a range of drugs and uses. Each draft guideline patient labeling text will be reviewed by FDA staff, and consultants representing a variety of disciplines, to determine who is most capable of drafting guideline patient labeling. The agency's evaluation of these draft patient labeling pieces will help determine to whom FDA should award contracts to write the draft patient labeling guidelines for the first phase of the implementation of the regulations.

Many criteria have been proposed for determining the order in which the patient labeling requirements should be applied to drug products. Criteria that are proposed as most useful in making that determination are the following:

(1) Whether the patient labeling would affect the patient's decision to use the drug product. This criteria would be a consideration for "elective" drug products such as the following: (a) products that are used by relatively healthy patients, but pose significant risks, (b) products that have not been shown to be safe and effective by contemporary standards and for which alternative drugs or nonpharmacological methods of treatment are available (for example, drugs subject to FDA's Drug Efficacy Study (see 21 CFR 201.200 and 310.6) or Biological Products Efficacy Review (see 21 CFR 601.25)), and (c) products that commit the consumer to a relatively long course of therapy that may be expensive when therapeutically equivalent treatments involving less time or cost are available.

(2) Whether the patient labeling would help prevent serious adverse effects. This criteria would apply to labeling primarily intended to inform the patient of potential interaction of the drug product with other drugs or foods, to avoid certain activities (such as driving or sunbathing), to help recognize early warning signals of potentially serious adverse effects (such as leg pains that may signal a serious blood clot), or to inform the patient about risks if the drug is used during pregnancy, labor, or delivery.

(3) Whether the patient labeling would help increase the patient's adherence to the prescribed course of therapy.

(4) Whether the drug product is one that physicians or patients believe to be safe and effective for an indication that is not included in the drug product's labeling, but for which the preponderance of the evidence related to that indication suggests that the drug product is either unsafe or ineffective. The agency would also consider the extent to which a particular drug product is prescribed.

Applying those criteria, the agency believes drug products or classes from the following list would be selected for patient labeling during the first phase of the implementation of the program. The drug products and classes are listed alphabetically. Comments are requested about the appropriateness of each of these drug products and classes for inclusion in the first phase of the program; suggestions about other drug products are also requested:

Acetohexamide
Aminoglycosides (class labeling)
Androgens (class labeling)
Anorexics, (nonamphetamine) (class labeling)
Anticholinergics, centrally active (class labeling)
Anticholinergics, synthetic (class labeling)
Anticoagulants, oral (class labeling)
Barbiturates (class labeling)
Beclomethasone
Betamethasone
Calcitrol
Carbamazepine
Cephalosporins
Chloramphenicol
Chlorazepate
Chlordiazepoxide
Chlorpropamide
Cholestyramine resin
Cimetidine
Clofibrate
Clonazepam
Clonidine
Cortisone
Cromolyn
Cyproheptadine
Dexamethasone
Dextroamphetamine
Diazepam
Digitoxin
Digoxin
Disulfiram
Ethclorvynol
Estrogens (revision)
Erythromycin
Fenoprofen
Flurazepam
Furosemide
Glutethimide
Griseofulvin
Guanethidine
Hydantoins
Hydralazine
Hydrocortisone
Ibuprofen
Indomethicin
Isoniazid
Levodopa/carbidopa
Lincomycin/clindamycin
Lindane
Loperamide
Meprobamate
Metoprolol
Methyldopa
Methylphenidate
Methylprednisolone
Metronidazole
Mixed respiratory vaccines (class labeling)
Nadalol
Nalidixic acid
Naproxen
Oral contraceptives (revision)
Oxazepam
Penicillins non-penicillinase-resistant (class labeling)
Penicillins penicillinase resistant (class labeling)
Penicillins semi-synthetic (class labeling)
Phenylbutazone/oxyphenbutazone
Prednisolone
Prednisone
Primidone
Propoxyphene
Propranolol
Quinidine salts (class labeling)
Rauwolfia alkaloids (class labeling)
Selenium sulfide

spironolactone
Sulfonamides (class labeling)
Sulindac
Terbutaline
Tetracyclines (class labeling)
Theophylline
Thiazide diuretics (class labeling)
Thyroid preparations (class labeling)
Tolazamide
Tolbutamide
Tolmetin
Tretinoin
Triamcinolone
Trimethadione/paramethadione
Valproic acid

Comments have asked about the application of the patient labeling regulations to prescription drug products such as prescription dermatological drug products that are compounded by pharmacists. The comments have expressed concern about who would be required to prepare and distribute patient labeling for those drug products. Because drug products that are most often compounded by pharmacists would probably not meet the criteria discussed above for requiring patient labeling during the first phase of FDA's implementation program, it is unnecessary to propose regulations at this time that would specifically require patient labeling for those drug products. Nevertheless, FDA requests comments about either applying or exempting pharmacist-compounded drug products from the patient labeling requirements.

Dispensing requirements for patient labeling. The proposed regulations would require the dispenser of a prescription drug product to provide patient labeling with the drug product when it is dispensed. The dispenser would be required to provide the patient labeling with the drug product directly to the patient or to an agent of the patient. Because a friend or relative of a nonhospitalized patient may have the patient's prescription filled, the proposed regulations obviously could not require the dispenser to provide the labeling to the patient in every case. The dispenser would be required to distribute the labeling free of any additional materials. Permitting patient labeling to be dispensed with or attached to promotional information about a drug product, whether or not it is about the one dispensed, would be inconsistent with the purpose of patient labeling.

As defined in the regulations, the "dispenser" of a prescription drug product is the person who provides the product to the patient or patient's agent. Thus, a pharmacist, physician, nurse, or other person who provides a prescription drug product to a patient would be responsible under the regulation for providing the product's patient labeling to the patient. Because the term "dispense" specifically includes the act of administering a drug product, a person who administers an injectable drug product would be required to provide the product's patient labeling to the patient. Failure to distribute the patient labeling would result in the misbranding of the drug product and would subject the person responsible for the violation (and the drug product) to the sanctions for misbranding (seizure, injunction, or criminal prosecution).

Some consumers and medical organizations have argued that patient labeling for prescription drug products should be distributed by the physician before or at the time the drug product is prescribed, even if the physician does not dispense the product. The argument is twofold. First, it is argued that information for patients about prescribed drug products is properly a subject that is within the patient/physician relationship and that neither the dispenser of the drug product nor the government should intrude upon that relationship. Second, the purpose of providing drug product use information to patients is to enable them to participate in choosing the appropriate therapy for their condition and that participation logically must occur when the drug product is prescribed.

FDA agrees that physicians have the primary responsibility for advising patients about drug products. Some patients may place greater importance on patient labeling and be more willing to accept it if it is provided by their physicians. Nevertheless, patient labeling is intended to serve primarily as an informational adjunct to the patient/physician encounter and to reinforce and augment the information given by the physician to the patient at the time the drug product is prescribed. Accordingly, patient labeling is not properly characterized as an intrusion into the patient/physician relationship. In addition patient labeling will be available to physicians who wish to provide it to patients when the drug product is prescribed. Although the patient labeling regulations would not require the physician who is not the dispenser of the drug product to provide the labeling to the patient, physicians are encouraged to introduce and discuss the labeling so that patients will be aware of it.

Although patient participation in the selection of the appropriate drug product is one objective of patient labeling, it is of secondary importance in the case of most physician-diagnosed conditions. Clearly for some prescription drug products, patients should participate in the decision as to which therapy is appropriate. In those cases, the patient should accept one course of treatment only with full knowledge of other teatments for the same condition. For example, women who use oral contraceptives, which are potent prescription drug products, should only do so with the knowledge that other methods of contraception are available that pose fewer risks. In addition, because estrogenic drug products present many risks, a woman may rationally decide not to use them, notwithstanding her physician's recommendation, if they are prescribed only to treat the discomforting symptoms of menopause. In the case of these "elective" drug products, patient labeling may play an important part in informing patients about the drug product and thus enable them to participate in the decision about the appropriate therapy. Patient participation should strengthen the patient/physician relationship and promote more rational use of prescription drug products by patients.

For the majority of drug products, however, the choice of a drug product for the treatment of a condition is made by the physician after diagnosing the condition and, accordingly, is not suited for "election" by the patient. Although a patient may ultimately choose not to take a prescribed drug product based on the patient's own benefit-to-risk analysis of his or her condition and the prescribed therapy, the patient would not be in a position to participate with the physician in the selection of an appropriate drug product.

The patient may still participate in the drug product selection process, however, even if labeling is not provided at the time the drug product is prescribed. Responsible physicians will normally discuss the benefit-to-risk judgment associated with elective-type therapies, even if they do not provide the labeling at the time of consultation. In any event, requiring the labeling to be dispensed at the time of prescribing does not guarantee that physicians will consult with patients about their therapy.

Consequently, other considerations have a greater role in determining the proper manner of distributing patient labeling. These considerations are numerous. First, pharmacists have traditionally served as dispensers of prescription drug products, and they are best able to collate, store, and provide labeling to patients. Second, physicians prescribe drug products by telephone

and some patients who take drug products on a chronic basis may not visit the physician for a significant length of time during which patient labeling might be established for the drug product or rewritten. Thus, physicians may not even have the opportunity to provide labeling to the patient. Third, patients may not be psychologically ready to receive detailed information about a drug product at the time a diagnosis is made or may be more willing to attend to the labeling when the drug product is dispensed. Finally, dispenser distribution of patient labeling is more appropriate under FDA's statutory authority for regulating the distribution of drug products and labeling. Because the patient labeling requirements for prescription drug products are based upon FDA's legal authority to regulate the labeling of drug products, a dispenser-distribution system for patient labeling conforms more closely to FDA's legislative mandate.

As noted above, some physicians may still wish to dispense patient labeling, and some patients may still wish to have access to patient labeling before the drug product is dispensed. Accordingly, FDA encourages physicians to distribute patient labeling when drug products are prescribed. FDA encourages manufacturers to supply physicians with patient labeling for such a voluntary distribution program.

Patient labeling for a prescription drug product will be available to physicians as part of the physician labeling for the drug product. The guideline physician labeling for both oral contraceptive drug products (published in the Federal Register of January 31, 1978 (43 FR 4214)) and estrogens (published in the Federal Register of September 29, 1976 (41 FR 43117)) contain the patient labeling for the drug products printed at the end of the physician labeling. Patient labeling for prescription drug products should be available to physicians in the same manner that physician labeling is currently available to them. This can most easily be accomplished by reproducing the patient labeling at the end of the physician labeling as in the case of oral contraceptives and estrogens. In the Federal Register of June 26, 1979 (44 FR 37434), FDA published final regulations revising the format for physician labeling for prescription drug products. These regulations require that any printed patient information be referenced under the precautions section of the physician labeling, and, when appropriate, reprinted at the end of the physician labeling. The text of patient labeling that would be required under these regulations would be appropriately reprinted at the end of the physician labeling for the drug product.

Distribution of Patient Labeling

Under the proposed regulations, the manufacturer of a prescription drug product would be required to provide patient labeling to the dispenser of the product, who would then be required to provide the labeling to the patient. If the manufacturer produces the drug product in unit-of-use packages, the manufacturer would be required to provide the patient labeling with each package. If the drug product is distributed to dispensers in bulk containers intended for repackaging by the dispenser for individual prescriptions, the manufacturer would be required to provide sufficient patient labeling pieces in or with the package to assure that a patient labeling piece could be included with each prescription.

As stated in paragraph 8 of the preamble to the final rule requiring patient labeling for estrogens (42 FR 37639), it is undesirable to separate the distribution of patient labeling from the bulk shipment of a drug product to a dispenser. The regulations would require the patient labeling to physically accompany the drug product in shipment, although additional brochures may be shipped to physicians, pharmacists, and other dispensers. This requirement would assure, better than any other, that dispensers receive the labeling that they would be required to distribute. Moreover, because a rather long period may pass before the patient labeling requirements will be applied to most drug products, dispensers who do not receive patient labeling with a shipment of a drug product might believe the patient labeling requirements have not yet applied to the product. Manufacturers and distributors will be expected to employ a reliable statistical method to determine the number of patient labeling pieces to include in or with each bulk package.

Under the proposed regulations, a distributor or dispenser who receives a drug product with the manufacturer's patient labeling may assume the duties of the manufacturer for providing patient labeling for the drug product. The distributor or dispenser may discard the manufacturer's patient labeling and provide labeling prepared by the distributor or dispenser.

The use of dispenser-prepared patient labeling would not subject dispensers to the registrations and drug listing requirements as set forth in section 510 of the act and Part 207 of the regulations (21 CFR Part 207). The use of dispenser-prepared patient labeling would be within the terms of § 207.65 of the regulations (21 CFR 207.65), which exempts certain domestic drug establishments, including pharmacies, hospitals, and clinics, from registration and drug listing.

In addition to permitting the use of dispenser-prepared labeling, a manufacturer would be relieved of the obligation to provide patient labeling with a drug product if the manufacturer has entered into a labeling agreement with the person to whom the drug product is distributed. The agreement would be required to comply with the requirements for written agreements under § 201.150 and would contain both (1) a statement that the person to whom the drug product is distributed will perform the duties of the manufacturer under the patient labeling regulations, and (2) a copy of the patient labeling for the drug product. Any two persons involved in the distribution of prescription drug products would be permitted to enter into a labeling agreement. In addition, any number of labeling agreements would be permitted in the distribution chain of a prescription drug product.

Exemptions From Patient Labeling Dispensing Requirements

Under the proposed regulations a dispenser would be required to provide patient labeling to every patient each time a prescription drug product is dispensed. On the basis of comments received from physicians, pharmacists, other dispensers, and health professional's organizations, the agency believes that the dispenser should be exempted from the requirement under the following circumstances.

Legally incompetent patients. Under the proposed regulations, the dispenser of a prescription drug product would be permitted to provide the patient labeling for the drug product to the parent or legal guardian of a patient who is either mentally disabled or is a child who is not legally competent to consent to medical treatment in the jurisdiction where the drug product is dispensed. Because dispensers often are not well situated to determine the legal capacity of the patient, this proposal would not require distribution of patient labeling to the parent or legal guardian of the patient but would simply permit it as an alternative to providing the labeling directly to the patient.

Physician withholding of patient labeling. Under the proposed regulations, the dispenser of a

prescription drug product would not be required to provide patient labeling to the patient if the physician who prescribes the drug product directs that the labeling be withheld. As proposed, the regulations provide an exemption under which the physician may direct the dispenser to withhold patient labeling for a particular drug product, unless a specific regulation requires that patient labeling for the product be provided to all patients under all circumstances, as is presently the case with oral contraceptives. A physician would be permitted to direct the withholding of patient labeling for any medical reason, such as if the physician believed the patient would experience significant adverse emotional or physical effects from the labeling. A direction to the dispenser to withhold the labeling would be required to be written on the prescription. In the case of an oral prescription, the physician could orally direct that the patient labeling be withheld but the dispenser would be required to reduce that direction to writing and file it with the presription.

Organizations of health care professionals have argued that patient labeling might product adverse emotional or physical effects if provided to some patients. Thus, a physician should generally be free to decide to withhold the patient labeling when he or she believes it would be in the patient's interest to do so. It is obviously impossible, however, to predict precisely how a patient will react to information contained in patient labeling. Nevertheless, FDA believes that only rarely should a patient's possible reaction justify withholding the patient labeling. FDA believes patient labeling should not be withheld, for example, simply because a patient might decide on the basis of information in the labeling not to initiate, or to discontinue the prescribed drug therapy. Clearly, labeling for a drug product associated with serious risks that are taken at the election of the patient (notably an estrogen-based product, such as an oral contraceptive) should not be subject to the discretionary withholding of the patient labeling by the physician.

Regardless of whether the drug product is one for which the physician may direct or has directed the withholding of the labeling, the regulations would specifically require dispensers to provide patient labeling to any patient, or agent of a patient for whom the drug product is prescribed, who asks the dispenser for a copy of the labeling. Because the patient has the right to make the ultimate decision about his or her own treatment, the dispenser would be required to provide the patient labeling if the patient requests it when the drug product is dispensed.

Patients needing emergency treatment. The dispenser of a prescription drug product also would not be required to provide patient labeling when the drug product is dispensed to a patient in the course of an emergency treatment where the need for the drug product is largely unforseen. Because of the need for quick action, particularly by ambulance crews, fire fighters, police officers, and emergency room personnel, requiring patient labeling to be provided to the patient either at that time or later would be impractical. In those cases, patient labeling would not affect patient compliance with the therapy nor would it permit the patient to participate in the decision about the appropriate treatment. Similarly, a requirement that patient labeling be made available after the drug product has been dispensed and the emergency has passed presents significant logistical problems because the patient will generally no longer be under the control of, or in contact with, the dispenser of the product.

This exemption is not intended to apply where the onset of the condition can be expected to occur randomly, as in some patients undergoing certan surgical procedure. In such cases, patient labeling should be made available to the patient either before or after the drug product is dispensed.

Institutionalized patients. The distribution of patient labeling to hospital inpatients or patients in long-term-care facilities poses many logistical and practical problems. Practitioners, pharmacists, and other dispensers of drug products have urged that products dispensed to institutionalized patients be exempted from the patient labeling requirements. Some of the reasons suggested for an exemption are that: (1) the institutionalized patient is probably more seriously ill than the outpatient and thus unable to use patient labeling, (2) many institutions already have or plan to have programs providing information to patients about drug products, (3) patients have readily available to them hospital staff to answer questions concerning prescription drug products, and (4) a requirement that patient labeling be provided to institutionalized patients would place a great logistical burden on the institution.

Institutionalized patients, however, have the same rights as outpatients to receive information about prescription drug products. Although staff members may be available to answer patients' questions about drug products, patient labeling would still complement oral instructions. In addition, a question-and-answer approach to delivering information on prescription drug products may not be effective for many patients. Nevertheless, significant differences exist between institutionalized patients and other patients which should be considered in establishing a patient labeling distribution scheme. The institutionalized patient may not be emotionally or physically able to use patient labeling at the time a prescription drug product is dispensed. Distribution of labeling may be complicated because institutionalized patients may take many different drug products at the same time, and for extended periods of time. While perhaps manageable, the increased responsibility for distributing patient labeling will certainly require changes in the drug distribution practices of most institutional pharmacies. Accordingly, the agency proposes that drug products dispensed in hospitals and long-term-care facilities be exempt from the patient labeling distribution requirements if the patient (or the patient's agent) is informed when admitted, or as soon after admission as is practicable, that patient labeling is available for certain prescription drug products and, if requested, the patient or the patient's agent will be given the opportunity to review it. Institutions would not be required, however, to provide patients with personal copies of any specific patient labeling. Instead, patient labeling pieces could, for example, be maintained in compendia at selected stations in a hospital, and made available to patients. Because patients could ask to review the patient labeling at any time during a hospital stay, it would not be necessary to provide them with personal copies of the labeling. In addition to permitting institutions to use compendia of patient labeling, this exemption would permit the use of other fixed information sources, such as audio or audiovisual tape recordings, that carry the same message as the written patient labeling. This flexibility is intended to permit institutions to use the most technologically advanced information systems that would permit patients to have free access to patient labeling information.

This proposed exemption differs from the specific exemptions for long-term- and acute-care facilities provided in the patient labeling requirements for oral contraceptives in § 310.501(a)(1) and for

estrogens in § 310.515(d)(1). Those regulations, which apply to products that are essentially elective, did not provide an exemption from the patient labeling distribution requirements for hospitalized patients. They required labeling to be dispensed to patients in long-term-care facilities when the product is initially dispensed and again every 30 days as long as the therapy continues. The agency believes, however, that a distinction should not be made in these proposed regulations between hospitals and long-term-care facilities. Hospitals should, however, inform patients undergoing long-term care regularly about the availability of patient labeling, and inform them about how the labeling can be reviewed. Because patient labeling would be initially required for many drug products over a relatively long time period and because patients may be unfamiliar with the labeling, the agency believes it is important that patients be periodically reminded of patient labeling availability. Once patient labeling is widely available for most prescription drug products and patients become familiar with it, such reminders may be unnecessary.

This exemption for institutionalized patients would not apply, however, to a drug product administered to a woman during labor or delivery. Many drug products, such as anesthetics, that are administered during labor or delivery may be refused by the patient without substantially increased risk to either the mother or unborn child and, thus, are essentially elective. In addition, physicians and other dispensers are aware of those drug products that are commonly dispensed during labor or delivery and can provide patient labeling to the pregnant patient at the time of prenatal examinations, hospital admissions, or during the early stages of labor. Although these regulations generally tie the distribution of patient labeling to the act of dispensing the drug product, they do not prohibit, and FDA encourages, the distribution of patient labeling before drug products are dispensed. The distribution of patient labeling to pregnant women for drug products commonly used during labor or delivery should not be the subject of the general hospital exemption, because the treatment is sufficiently routine and the therapy is sufficiently elective to warrant the dispensing of patient labeling.

References

(1) Morris, L. A., M. Mazis, and E. Gordon, "A Survey of the Effects of Oral Contraceptive Patient Information," *Journal of the American Medical Association*, 238:2504–2508, 1977.

(2) "Joint Symposium on Drug Information for Patients—The Patient Package Insert," *Drug Information Journal*, Special Supplement, 11:15–82S, 1977.

(3) McGuire, W. J., "Some Internal Psychological Factors Influencing Consumer Choice," *Journal of Consumer Research*, 2:302–319, 1976.

(4) Hoff, L. C., "How Often Do Consumers Seek Your Advice on Rx and OTC Products?" *Pharmacy Times*, 103:52–55, 1975.

(5) Svarstad, B. L., "Physician-Patient Communication and Patient Conformity with Medical Advice," *in* "The Growth of Bureaucratic Medicine," John Wiley and Sons, New York, pp. 221–238, 1976.

(6) Dickson, W. M., and C. A. Rodowskas, "Verbal Communications of Community Pharmacists," *Medical Care*, 13:486–495, 1975.

(7) Knapp, D. A., D. E. Knapp, and T. A. Rudy, "The Pharmacist as a Drug Advisor," *Journal of the American Pharmaceutical Association*, NS 9:502–543, 1969.

(8) Rowles, B., S. Keller, and P. W. Gaun, "The Pharmacist as Compounder and Consultant," *Drug Intelligence and Clinical Pharmacy*, 8:242–244, 1974.

(9) "Cutting Corners at the Corner Drug Store: An Investigation of Pharmacy Practices in Greater Boston," Report of the Massachusetts Consumers' Council, Boston, 1976.

(10) Campbell, R. K., and J. A. Grisafie, "Compliance with Washington State Patient Information Regulation," *Journal of the American Pharmaceutical Association*, NS15:484–528, 1975.

(11) Ley, P., and M. S. Spellman, "Communications in an Out-Patient Setting," *British Journal of Social Clinical Psychology*, 4:114–116, 1965.

(12) Joyce, C. R. B., et al., "Quantitative Study of Doctor-Patient Communication," *Quarterly Journal of Medicine*, 150:183–194, 1960.

(13) Bain, D. J. G., "Patient Knowledge on the Content of the Consultation in General Practice," *Medical Education*, 11:347–350, 1977.

(14) Ley, P., "Primacy, Rated Importance, and the Recall of Medical Statements," *Journal of Health and Social Behavior*, 13:311–317, 1972.

(15) Ley, P., Psychological Studies of Doctor Patient Communication in Rachman, (ed), *Contributions to Medical Psychology*, Pergamen Press, pp. 9–42, 1977.

(16) Korsch, B. M., and V. F. Negrette, "Doctor-Patient Communication," *Scientific American*, 227:66–74, 1972.

(17) Boyle, C. M., "Difference Between Patients' and Doctors' Interpretation of Some Common Medical Terms," *British Medical Journal*, 2:286–289, 1970.

(18) Riley, C. S., "Patients' Understanding of Doctors' Instructions," *Medical Care*, 4:34–37, 1966.

(19) Tring, F. C., and M. C. Hayes-Allen, "Understanding and Misunderstanding of Some Medical Terms," *British Journal of Medical Education*, 7:53–59, 1973.

(20) Blaken, G. E., "Comprehension of Selected Labeling Information on Foods, Drugs, and Medical Devices: A Consumer Survey," Food and Drug Administration, 1978.

(21) Samora, J., L. Saunders, and R. Larson, "Medical Vocabulary Knowledge Among Hospital Patients," *Journal of Health and Human Behavior*, 2:83–92, 1961.

(22) Seligmann, A., N. E. McGrath, and L. Pratt, "Level of Medical Information Among Clinic Patients," *Journal of Chronic Diseases*, pp. 497–509, 1957.

(23) Hulka, B., L. L. Kupper, J. C. Cassel, and F. Mayo, "Doctor-Patient Communication and Outcomes among Diabetes Patients," *Journal of Community Health*, 1:15–27, 1975.

(24) McKinlay, J. B., "Who is Really Ignorant—Physician or Patient?" *Journal of Health and Social Behavior*, 16:3–11, 1975.

(25) Ley, P., "Comprehension, Memory and the Success of Communications with the Patient," *Journal of Institute of Health Education*, 10:23–29, 1972.

(26) Korsch, B., E. K. Gozzi, and V. Francis, "Gaps in Doctor-Patient Communication," *Pediatrics*, 42:855–871, 1968.

(27) Pratt, L. et al., "Physicians' Views on the Level of Medical Information among Patients," *American Journal of Public Health*, 47:1277–1283, 1957.

(28) Rosenberg, S. G., "A Case for Patient Education," *Hospital Formulary Management*, 6:1–4, 1971.

(29) Ley, P., and M. S. Spellman, "Communicating with the Patient," Staples Press, London, 1967.

(30) Manheimer, D., S. Davidson, and Balter, et al., "Popular Attitudes and Beliefs About Tranquilizers," *American Journal of Psychiatry*, 130:1246–1253, 1973.

(31) Fleckenstein, L., et al., "Oral Contraceptive Patient Information: Questionnaire Study of Attitudes, Knowledge, and Preferred Information Sources," *Journal of the American Medical Association*, 235:1331–1336, 1976.

(32) Decastro, F., "Doctor-Patient Communication," *Clinical Pediatrics*, 11:86–87, 1972.

(33) Knapp, D. E., "Consumers and Medication," FDA Report No. FDA-D-ADMC-4, National Technical Information Service, Springfield, Virginia, 1974.

(34) Joubert, P., and L. Lasagna, "Patient Package Inserts, Notion, Nature, and Needs," *Clinical Pharmacology and Therapeutics*, 18:507–513, 663–669, 1976.

(35) Mazis, M., L. Morris, and E. Gordon, "Patient Attitudes about Two Forms of Oral Contraceptive Information," *Medical Care*, 16:1045–1054, 1978.

(36) Ryan, J., and F. G. McMahon, "Potential Effects on the Health Care System–2," *Drug Information Journal*, Supplement: pp. 75–79, 1977.

(37) Kanouse, D. E., and L. A. Morris, "Patient Package Inserts: Effects on Patient Knowledge, Attitudes and Behavior," presented at American Public Health Association Meeting, October 1978, Los Angeles.

(38) Roper Reports 78-31, The Roper Organization Inc., New York, 1978.

(39) Marston, M. V., "Compliance with Medical Regimens: A Review of the Literature," *Nursing Research*, 19(4):312–323, 1970.

(40) Boyd, J. R., T. R. Covington, W. F. Stanaszek, and R. T. Coussons, "Drug Defaulting: Determinants of Compliance," *American Journal of Hospital Pharmacy*, 31:362–367, 1974.

(41) Sackett, D. L., "The Magnitude of Compliance and Noncompliance" *in* "Compliance with Therapeutic Regimens," Johns Hopkins Press, Baltimore, pp. 9–25, 1976.

(42) Ley, P., "Psychological Studies of Doctor-Patient Communication," *in* "Contributions to Medical Psychology," Pergamon Press, New York, pp. 9–42, 1977.

(43) Barofsky, I., *Chronic Psychiatric Patient in the Community: Principles of Treatment*, Spectrum Wiley Press, in press.

(44) Spector, R., et al., "Does Intervention by a Nurse Improve Medication Compliance? *Archives of Internal Medicine*, 138:36–40, 1978.

(45) Weintraub, M., W. Y. W. Au, and L. Lasagna, "Compliance as a Determinant of Serum Digoxin Concentration," *Journal of the American Medical Association*, 224(4):481–485, 1973.

(46) Marsh, W., and L. Perlman, "Understanding Congestive Heart Failure and Self-Administration of Digoxin," *Geriatrics*, pp. 65–70, July 1972.

(47) Abernethy, J. D., "The Problem of Non-Compliance in Long-Term Antihypertensive Therapy," *Drugs*, 11(Suppl. 1):86–90, 1976.

(48) Eshelman, F. N., and J. Fitzloff, "Effect of Packaging on Patient Compliance with Antihypertensive Medication," *Current Therapeutic Research*, 20(2):215–219, 1976.

(49) Fletcher, S., F. A. Appel, and M. A. Bourgeois, "Management of Hypertension—Effect of Improving Patient Compliance for Follow-up Care," *Journal of the American Medical Association*, 233:242–244, 1975.

(50) Sackett, D. L., et al., "Randomized Clinical Trial of Strategies for Improving Medication Compliance in Primary Hypertension," *Lancet*, pp. 1205–1207, May 31, 1975.

(51) McKenney, J., et al., "The Effect of Clinical Pharmacy Services on Patients with Essential Hypertension," *Circulation*, 48:1104–1111, 1973.

(52) Leistyna, J., and J. Macaulay, "Therapy of Streptococcal Infections," *American Journal of Diseases of Children*, 3:22–26, 1966.

(53) Gordis, L., M. Markowitz, and A. M. Lilienfeld, "The Inaccuracy of Using Interviews to Estimate Patient Reliability in Taking Medications at Home," *Medical Care*, 7(2):49–54, 1969.

(54) Gordis, L., M. Markowitz, and A. M. Lilienfeld, "Why Patients don't Follow Medical Advice: A Study of Children on Long-Term Antistreptococcal Prophylaxis," *Journal of Pediatrics*, 75(6)(I): 957–968, 1969.

(55) Gordis, L., and M. Markowitz, "Evaluation of Effectiveness of Comprehensive and Continuous Pediatric Care," *Pediatrics*, 48(5):766–776, 1971.

(56) Colcher, I. S., and J. W. Bass, "Penicillin Treatment of Streptococcal Pharyngitis," *Journal of the American Medical Association*, 222(6): 657–759, 1972.

(57) Charney, E., et al., "How Well Do Patients Take Oral Penicillin: A Collaborative Study in Private Practice," *Pediatrics*, 40(2):188–195, 1967.

(58) Gordis, L., M. Markowitz, and A. M. Lilienfeld, "Studies in the Epidemiology and Preventability of Rheumatic Fever," *Pediatrics*, 43(2):178–182, 1969.

(59) Mattar, M., J. Markello, and S. J. Yaffe, "Pharmaceutic Factors Affecting Pediatric Compliance," *Pediatrics*, 55(1):101–108, 1975.

(60) Sharpe, T., and R. Mikeal, "Patient Compliance with Antibiotic Regimens," *American Journal of Hospital Pharmacy*, 31:479–484, 1974.

(61) Becker, M., R. H. Drachman, and J. P. Kirscht, "Motivations as Predictors of Health Behavior," *Health Service Reports*, 87(9):852–862, 1972.

(62) Meyers, A., T. Dolan, and D. Mueller, "Compliance and Self-Medication in Cystic Fibrosis," *American Journal of Diseases of Children*, 129:1011–1013, 1975.

(63) Arnhold, R. G., et al., "Patients and Prescriptions: Comprehension and Compliance with Medical Instructions in a Suburban Pediatric Practice," *Clinical Pediatrics*, 9(11): 648–651, 1970.

(64) Bergman, A., and R. Werner, "Failure of Children to Receive Penicillin by Mouth," *New England Journal of Medicine*, 268(24):1334–1338, 1963.

(65) Preston, D., and F. Miller, "The Tuberculosis Outpatient's Defection from Therapy," *American Journal of Medical Science*, 247:21–24, 1964.

(66) Onstad, D., J. A. Sbarbaro, and L. Rotenberg, "Posthospital Chemotherapy of the Unreliable Patient," *American Review of Respiratory Diseases*, 101:258–264, 1970.

(67) McInnis, J., "Do Patients Take Antituberculosis Drugs?" *American Journal of Nursing*, 70(10):2152–2153, 1970.

(68) Hecht, A., "Improving Medication Compliance by Teaching Outpatients," *Nursing Forum*, 13(2):112–129, 1974.

(69) Ballinger, B., A. C. Ramsay, and M. J. Stewart, "Methods of Assessment of Drug Administration in a Psychiatric Hospital," *British Journal of Psychiatry*, 127:494–498, 1975.

(70) Rickels, K., et al., "Differential Effects of Chlordiazepoxide and Fluphenazine in Two Anxious Patient Populations," *Psychopharmacologia*, 12:181–192, 1968.

(71) Johnson, D. A. W., and H. Freeman, "Long Acting Tranquilizers," *Practitioner*, 208:395–400, 1972.

(72) Parkes, M., G. W. Brown, and E. M. Monck, "The General Practitioner and the Schizophrenic Patient," *British Medical Journal*, pp. 972–975, April 7, 1962.

(73) Hare, E. H., and D. R. C. Willcox, "Do Psychiatric In-Patients Take Their Pills?" *British Journal of Psychiatry*, 113:1435–1439, 1967.

(74) Baekeland, F., and L. Lundwall, "Effect of Discontinuity of Medication on the Results of a Double-Blind Drug Study in Outpatient Alcoholics," *Journal of Studies of Alcohol*, 36(9):1268–1271, 1975.

(75) Willcox, D. R. C., R. Gillan, and E. H. Hare, "Do Psychiatric Out-Patients Take Their Drugs?" *British Medical Journal*, 2:790–792, 1965.

(76) Irwin, D., W. D. Weitzel, and D. W. Morgan, "Phenothiazine Intake and Staff Attitudes," *American Journal of Psychiatry*, 127(12):67–71, 1971.

(77) Rickels, K., and E. Briscoe, "Assessment of Dosage Deviation in Outpatient Drug Research," *Journal of Clinical Pharmacology*, 10:153–160, 1970.

(78) Porter, A. M. W., "Drug Defaulting in a General Practice," *British Medical Journal*, 1:218–222, 1969.

(79) McKenney, J. and W. Harrison, "Drug-Related Hospital Admissions," *American Journal of Hospital Pharmacy*, 33:792–795, 1976.

(80) Brand, F., R. T. Smith, and P. A. Brand, "Effect of Economic Barriers to Medical Care on Patients' Noncompliance," *Public Health Reports*, 92(1):72–78, 1977.

(81) Mushlin, A., and F. Appel, "Diagnosing Potential Noncompliance," *Archives of Internal Medicine*, 137:318–321, 1977.

(82) Latiolais, C., and C. Berry, "Misuse of Prescription Medications by Outpatients," *Drug Intelligence and Clinical Pharmacy*, 3:270–277, 1969.

(83) Miller, W., "Drug Usage: Compliance of Patients with Instructions on Medication," *Journal of the American Optometric Association*, 75(4):401–404, 1975.

(84) Parkin, D. M., C. R. Henney, J. Quirk, and J. Crooks, "Deviation from Prescribed Drug Treatment after Discharge from Hospital," *British Medical Journal*, 2:686–688, 1976.

(85) Closson, R. G., and C. A. Kikugawa, "Noncompliance Varies With Drug Class," *Hospitals*, 49:89–93, 1975.

(86) Fink, D., et al., "Effective Patient Care in the Pediatric Ambulatory Setting: A Study of the Acute Case Clinic," *Pediatrics*, 43(6):927–935, 1969.

(87) Clinite, J., and H. Kabat, "Prescribed Drugs—Errors During Self-Administration," *Journal of the American Pharmaceutical Association*, N59:450–452, 1969.

(88) Bonnar, J., A. Goldberg, and J. A. Smith, "Do Pregnant Women Take Their Iron?" *Lancet*, 1:457–459, 1969.

(89) Geertsen, H. R., R. M. Gray, and J. R. Ward, "Patient Non-compliance Within the Context of Seeking Medical Care for Arthritis," *Journal of Chronic Diseases*, 26:689–698, 1973.

(90) Bloch, S., A. R. Rosenthal, L. Friedman, and P. Caldarolla, "Patient Compliance in Glaucoma," *British Journal of Ophthalmology*, 61:531–534, 1977.

(91) Roth, H., H. S. Caron, and B. P. Hsi, "Estimating a Patient's Cooperation with his Regimen," *American Journal of Medical Science*, 262:269–273, 1971.

(92) Eney, D., and E. Goldstein, "Compliance of Chronic Asthmatics with Oral Administration of Theophylline as Measured by Serum and Salivary Levels," *Pediatrics*, 57(4):513–517, 1976.

(93) Gibberd, F. B., J. F. Dunne, A. J. Handley, and B. L. Hazleman, "Supervision of Epileptic Patients Taking Phenytoin," *British Medical Journal*, 1:148–149, 1970.

(94) Morris, L., and J. Halperin, "Effects of Written Drug Information on Patient Knowledge and Compliance: A Literature Review," in press, *American Journal of Public Health*.

(95) Brands, A., "Rx:Complete Directions for Prescription Medication," *Journal of the American Pharmaceutical Association*, NS7:634–635, 1967.

(96) Canada, A., and S. Iazzetta, "Pharmacy Care for Ambulatory Patients," *Journal of the American Pharmaceutical Association*, NS14(1):18–20, 1974.

(97) DeMino, L., "Medication Form and 12 Labels Help to Promote Communications with Patients," *Pharmacy Times*, 42:52–55, 1975.

(98) Gillespie, B. J., and T. Farkas, "A Self-Medication Programme for Post-Coronary Patients," *Canadian Journal of Hospital Pharmacy*, 30(6):188–190, 1977.

(99) Griffity, H., D. Hayes, and L. Hyde, "Let Printed Aids Work for You—and Your Patients," *Patient Care*, pp. 119–125, February 15, 1973.

(100) Grissinger, S., L. Wolfe, and M. Cohen, "A Protocol for Consultation with Discharged Patients About Their Medications," *Hospital Pharmacy*, 8(16):175–183, 1973.

(101) Hecht, A., "Developing Drug Information for Patients," *FDA Consumer*, pp. 17–19, September 1977.

(102) Hildebrand, R., "Drug Information for Rx Patient," *Iowa Pharmacist*, pp. 12–13, April 1972.

(103) Hollister, L., "New Ideas About Drug Labels," editorial in *Clinical Pharmacology and Therapeutics*, 14(3):309–313, 1973.

(104) Liberman, P., and A. Swartz, "Prescription Dispensing to the Problem Patient," *American Journal of Hospital Pharmacy*, 29:163–166, 1972.

(105) Morris, L., "A Sampler of Printed Patient Oriented Prescription Drug Materials," *Drug Intelligence and Clinical Pharmacy*, 12:161–168, 1978.

(106) Namikas, E., A. Cheung, C. Wilson, and J. Brinkman, "Drug Counselling with the Aid of a Drug Education Monograph," *Hospital Pharmacy*, 11(3):91–96, 1976.

(107) Romandiewicz, J., V. Gotz, and H. Carlin, "Development of Patient Medication Instruction Cards," *American Journal of Hospital Pharmacy*, 33:928–931, 1976.

(108) Shilling, J., and M. Gibson, "Patient Instruction by Written Communication and by Private Consultation," *Journal of the American Pharmaceutical Association*, 6:632, 1966.

(109) Smith, D., D. Hill, E. Page, and K. Pylatuk, "A Patient Information System in an Outpatient Clinic," *Canadian Journal of Hospital Pharmacy*, pp. 165–169, Sept.-Oct. 1974.

(110) Smith, D., "Providing Pharmacy Service to Ambulatory Patients," *Hospital Administration in Canada*, pp. 35–41, Nov.-Dec. 1975.

(111) Smith, D., "Communicating With the Physician, Nurse and Patient," *Canadian Journal of Hospital Pharmacy*, pp. 41–50, March-April 1974.

(112) Smolek, R., "Auxiliary Labeling—Better Patient Care," *Illinois Hospital Pharmacist*, 34:418–420, 1970.

(113) Temkin, L., L. Jeffrey, J. Gallina, and K. Ingalls, "Communicating Information to the Ambulant Patient," *Journal of the American Pharmaceutical Association*, NS15:488–493, 1975.

(114) Vreugtenhil, P., "Patient, Pharmacist, Physician Prescription," *Canadian Pharmaceutical Journal*, 9:19–21, 1970.

(115) Welk, P., V. Burkhart, and P. Lamy, "The Technology of Patient Counselling," *Hospital Pharmacy*, 9(6):224–235, 1974.

(116) White, S., M. Toll, and H. Godwin, "Teaching Patients to Administer Their Own Eye, Ear and Nose Medications," *Hospital Pharmacy*, 9(4):149–151, 1974.

(117) "Statement on Pharmacist-Conducted Patient Counseling," *American Journal of Hospital Pharmacy*, 33:644–645, 1976.

(118) "A Sample of Effective Patient Aids," *Patient Care*, 8:148, 1974.

(119) " 'Drug Consultation Guide,' Issued in Washington State," *American Druggist*, 170:36–37, 1976.

(120) "Gray's New Rx Label System," *Chain Store Age/Drug Edition*, p. 28, March 1976.

(121) "Communication of Prescription Drug-Related Information to Patients," *Journal of the American Pharmaceutical Association*, NS17:7, 1977.

(122) Adams, J., "A Quarrel with Nader," letter in *The Washington Star*, December 17, 1976.

(123) Agresta, N., "Big Medicine and the Drug Establishment Take a Hard Look at Inserts," *Drug Topics*, p. 53, April 1977.

(124) Carlova, J., "Drug Package Inserts for Patients: Good Idea or Bad?" *Medical Economics*, pp. 140–149, October 1974.

(125) Chasen, N., "What You Don't Know About Your Medicine Can Hurt You," *The Washington Post* (Parade Magazine), June 5, 1977.

(126) Cohen, M., "What Drug Information Should the Consumer Have?—A Consumer Perspective," *Drug Information Journal*, 11:34–38, 1977.

(127) Cohen, M., "Why and How Pharmacists Can Assume Non-Traditional Health Roles," *Pharmacy Times*, 43:84–86, 1976.

(128) Compton, W., "What the Consumer Should Know About Food and Drugs," *Food, Drug, Cosmetic Law Journal*, 32(2):52–58, 1977.

(129) Dorsey, R., "The Patient Package Insert—Is It Safe and Effective?" *Journal of the American Medical Association*, 238(18):1936–1939, 1977.

(130) Feldman, E., "Labeling for the Public," *Journal of Pharmaceutical Sciences*, 62(5):4, 1973.

(131) Fink, J., "Therapeutic Liabilities: Package Insert," *Drug Therapeutics*, 6:140–143, 1976.

(132) Califano, J., "Remarks at the Public Citizens Forum," October 5, 1977.

(133) Canton, C., "Prescribing for the Illiterate," letter in *Journal of the Irish Medical Association*, 67:(22)600, 1974.

(134) Coodley, A., "Patient's Package Insert," letter in *Journal of the American Medical Association*, 235:372–3, 1976.

(135) Cooper, T., "Statement Before the Subcommittee on Health and the Environment," Committee on Interstate and Foreign Commerce, U.S. House of Representatives, March 29, 1976.

(136) Cooper, T., "Statement Before the Subcommittee on Health and the Environment," Committee on Interstate and Foreign Commerce, U.S. House of Representatives, June 22, 1976.

(137) Coyne, P., "Washington's New Malpractice Threat: Package Inserts and a Modest Proposal From the FDA," *Private Practice*, pp. 44–52, April, 1975.

(138) Davis, F., "Patient Package Inserts," *Private Practice*, 9:5, 1977.

(139) Finkel, M., "The Pros and Cons of Patient Package Inserts," Paper Presented at the Annual Meeting of the American Medical Association, Dallas, Texas, June 29, 1976.

(140) Finkel, M., in *Journal of the American Medical Association*, 239:1281–1282, 1978.

(141) Garcha, B., "FDA's Kennedy—Friend or Foe?" *Drug Topics*, pp. 37–40, January 1978.

(142) Gardner, M., "Increasing Patient Awareness in Drug Therapy: Ramifications of a Patient Insert Requirement," *The Georgetown Law Journal*, 66(3):837–867, 1978.

(143) Gardner, S., Remarks presented before the Food and Drug Law Institute, 20th Annual Educational Conference, Washington, DC, December 8, 1976.

(144) Goldstein, E., "Drug Package Inserts for Patients," *Trial Magazine*, 13:55–57, 1977.

(145) Gorman, T., "Patient Package Inserts: Will They Replace the Pharmacist's Advice?" *Drug Topics*, pp. 51–53, April 1977.

(146) Herrington, B. S., "Patient Package Inserts—How Much to Reveal?" *Psychiatric News*, 12:(3)3–5, 1977.

(147) Hirsh, H., "Patient Package Insert and Liabilities," *Drug Therapy* (Hospital Edition), 2:21–26, 1977.

(148) Hussey, H., "Drugs Like Cigarette Smoking, Can Be Dangerous," editorial in *Journal of the American Medical Association*, 235(16):1725–6, 1976.

(149) Jinks, M., "The Hospital Pharmacist in an Interdisciplinary Inpatient Teaching Program," *American Journal of Hospital Pharmacy*, 31:569–573, 1974.

(150) Kennedy, D., "Turtles and Other Chronic Hazards," presented before the Consumer Federation of America, Washington, DC, January 19, 1978.

(151) Kennedy, D., Remarks presented before the Regional Ad Hoc Professional Meeting, Food and Drug Administration, San Francisco, California, June 10, 1977.

(152) Kennedy, D., "FDA and Academic Medicine," presented before the Council of Academic Societies of the Association of American Colleges, Washington, DC, November 7, 1977.

(153) Kennedy, D., "Regulation and the Health Care System," presented at the Institute of Medicine Annual Meeting, Washington, DC, October 25, 1977.

(154) Knox, R., "FDA's Estrogen Ruling Fought," *Boston Sunday Globe*, October 9, 1977.

(155) Kruger, I., "Patient Package Inserts: The Patient's Right to Know," *Medical Economics*, pp. 18–19, January 1977.

(156) Lawrence, S., "Patient Package Insert Lands in Courts," *Bulletin of the American College of Physicians*, 18:7–23, 1977.

(157) Mayberger, H., B. Bell, "Patient Package Inserts and Oral Contraceptives,"

Journal of Legal Medical Practice, 5(a):14–17, 1977.

(158) McMahon, F., "Patient Package Insert," editorial response to letter in *Journal of the American Medical Association*, 235(10):1003–1004, 1976.

(159) McMahon, F., "The Patient Package Insert," editorial in *Journal of the American Medical Association*, 233(10):1089, 1975.

(160) Morris, L., and V. Gagliardi, "The Patient Package Insert as Drug Education," in "Medication Compliance: A behavioral Management Approach," edited by Barofsky, L, Charles B. Slack, Inc., Thorofare, NJ, 1977.

(161) Morris, L., and V. Gagliardi, "Patient Package Inserts: What Effects Can We Expect?" *Drug Information Journal*, 11(1):17–22, 1977.

(162) Morris, L., "Rationale for Patient Package Inserts," *American Journal of Hospital Pharmacy*, 35:179–184, 1978.

(163) Morris, L., "Patient Package Inserts—A New Tool for Patient Education," *Public Health Reports, 92(5):421–424, 1977.*

(164) Moss, J., "The Patient Package Insert," letter in *Journal of the American Medical Association*, 239(13):1281–1282, 1978

(165) Nader, R., "Patients Need Written Warnings to Counter MD Prescription Abuses," *Caveat Emptor*, p. 11, January 1977.

(166) Paul, S., W. Taylor, and D. Cook, "Patient Package Inserts—A Mixed Blessing," *Pennsylvania Pharmacist*, 59(3):13–16, 1978.

(167) Radoff, W., "Protests FDA Ruling On PPIs," letter in *Pharmacy Times*, p. 18, February 1978.

(168) Regier, H., "Drug Labeling for Laymen?" *Journal of Legal Medicine*, 114(40):15–16, 1976.

(169) Rooke, E., "The Patient Package Insert," letter in *Journal of the American Medical Association*, 236(2):141, 1976.

(170) Russel, C., "Patient Information on Drugs: A Difficult 'Dosage'," *The Washington Star*, December 1, 1976.

(171) Ryan, K., "The FDA and the Practice of Medicine," editorial in *New England Journal of Medicine*, 297(23):1287–1288, 1977.

(172) Schmidt, A., and J. Sammons, "Should a Specially Prepared Package Insert be Made Available to Patients?" *Medical World News*, 16:28–29, 1975

(173) Smith, D., Letter: "The Patient Package Insert—Whose Responsibility?" editorial in *Drug Intelligence and Clinical Pharmacy*, 10(5):288, 1976.

(174) Smith, K., "Patient Package Inserts and the U.S. Food and Drug Administration—Where Do We Stand at the Moment?" *Drug Information Journal*, 11:30–33, 1977.

(175) Talley, C., "Hospital Pharmacists Cope with Estrogen PPIs," editorial in *American Journal of Hospital Pharmacy*, 35:487, 1978.

(176) Tice, L., "Dr. Tice on Patient Package Inserts," *American Pharmacy*, NS18(1):29, 1978.

(177) Valentino, J., "An Analysis of the Regulatory and Legal Aspects of Patient Package Inserts," *Journal of the American Pharmaceutical Association*, NS17(11):688–691, 1977.

(178) Vincent, T., "Pros and Cons of Patient Package Inserts," *Resident and Staff Physician*, 23:124–134, 1977.

(179) Weigel, W., "New Regulatory Concepts in Rx Labeling for Patients," *Food, Drug, Cosmetic Law Journal*, 31:531–539, 1976.

(180) Whitney, H., "Educating the Public About Drugs," editorial in *Drug Intelligence and Clinical Pharmacy*, 9:571, 1975.

(181) Wickware, D., "Opinion Poll: What Practitioners Think About PPIs," *Patient Care*, pp. 50–57, February 1, 1977.

(182) Zellmer, W., "The FDA and the Pharmacist as an Advisor on Nonprescription Drugs," editorial in *American Journal of Hospital Pharmacy*, 31:447, 1974.

(183) Zellmer, W., "Patient Package Inserts," editorial in *American Journal of Hospital Pharmacy*, 33:535, 1976.

(184) Zellmer, W., "Patient Package Inserts in Hospitals," editorial in *American Journal of Hospital Pharmacy*, 35:393–4, 1978.

(185) Zimmerly, J., "New Warnings on the Way for Oral Contraceptives," *The Journal of Legal Medicine*, pp. 23–24, February 1977.

(186) "FDA Plans Patient Package Inserts," *U.S. Medicine*, 13:32–33, 1977.

(187) "On the Way to a Patient Package Insert," *Drug Therapy*, 7:169–171, 1977.

(188) "Internists in Poll Support Patient Package Inserts," *Internal Medical News*, January 1, 1977.

(189) "Patient Package Inserts: A Concept Whose Time Has Come?" Advertisement of the Pharmaceutical Manufacturers Association, *Medical World News*, July 25, 1977.

(190) "The Estrogen Controversy," *Howard Medical School Health Letter III*, pp. 3–4, February 1978.

(191) "Your Doctor's Prescription: It is Greek to you?" *Better Homes and Gardens*, pp. 47–56, February 1977.

(192) "Health Groups Back Concept of Patient Package Insert," *Family Practice News*, 7(1):13–14, 1977.

(193) "Patient Package Inserts," *The Bulletin*, pp. 4–9, June 1977.

(194) "Patient Package Inserts: A Start Toward Answers For Mountain Consumer Questions," *National Association of Retail Druggist Journal*, 99:4–9, 1977.

(195) "Informing Women About 'the Pill'," *FDA Consumer*, 11(1):20–21, 1977.

(196) "NARD (National Association of Retail Druggists) Positions Paper on Patient Package Inserts," *Pennsylvania Pharmacy*, 59(3):24, 1978.

(197) "FDA Meets Resistance to Patient Labeling," *U.S. Medicine*, March 15, 1978.

(198) Hearings before the Subcommittee on Health and the Environment, 94th Congress, HR 11617, HR 12391, and HR 14289—March, April, and June 1976—Drug Safety Amendments of 1976.

(199) Hearings before the Subcommittee on Health and the Environment, 95th Congress, HR 11611, June 1978, Drug Regulatory Reform Act.

(200) Myers, E. D., and E. J. Calvert, "The Effect of Forewarning on the Occurrence of Side Effects and Discontinuance of Medication in Patients on Dothiepin," *Journal of International Medical Research*, 4:237–240, 1976.

(201) Myers, E. D., and E. J. Calvert, "The Effect of Forewarning on the Occurrence of Side Effects and Discontinuance of Medication in Patients on Amitriphyline. "*British Journal of Psychiatry*, 122: 461–464, 1973.

(202) Eklund, L. H., and A. Wessling, "Evaluation of Package Enclosures for Drug Packages," *Lakartidningen*, 73(25):2319–2320, 1976.

(203) Bass, M., and L. Suveges, "The Impact of Counseling by the Pharmacist on Patient Knowledge and Compliance," Research paper under direction of Martin Bass, University of Western Ontario, Canada, 1977.

(204) Weibert, R., "Patient Package Inserts: Potential Distribution Problems," *Drug Information Journal*, 11:45S–49S, 1977.

(205) Paulson, P., R. Bauch, M. L. Paulson, and D. A. Zilz, "Medication Data Sheets—An Aid to Patient Education," *Drug Intelligence and Clinical Pharmacy*, 10:448–453, 1976.

(206) Newcomer, D., and R. Anderson, "Effectiveness of a Combined Drug Self-Administration and Patient Teaching program," *Drug Intelligence and Clinical Pharmacy*, 8:374–381, 1974.

(207) Shapiro, A. K., and L. Morris, "The Placebo Effect in Medical and Psychological Therapies," *Handbook of Psychology and Behavior Change*, New York, NY, 1978.

The potential environmental effects of this action have been carefully considered, and FDA has concluded that the action will not significantly affect the quality of the human environment. The action is one of a type for which the agency has determined that the preparation of an environmental impact statement is not required, except in rare and unusual circumstances. 21 CFR 25.1(f)(12). Accordingly, the preparation of an environmental impact analysis report for this action is not required under 21 CFR 25.1(g).

Therefore, under the Federal Food, Drug, and Cosmetic Act (secs. 502, 503, 505, 506, 507, 701, 52 Stat. 1050–1053 as amended, 1055–1056 as amended, 55 Stat. 851, 59 Stat. 463 as amended (21 U.S.C. 352, 353, 355, 356, 357, 371)) and the Public Health Service Act (sec. 351, 58 Stat. 702 as amended (42 U.S.C. 262)), and under authority delegated to the Commissioner (21 CFR 5.1), it is proposed that Chapter I of Title 21 of the code of the Federal Regulations be amended by adding new Part 203 to read as follows:

PART 203—PATIENT LABELING FOR PRESCRIPTION DRUG PRODUCTS

Subpart A—General Provisions

Sec.
203.1 Status of patient labeling regulations.
203.3 Definitions.

Subpart B—General Requirements for Patient Labeling

203.20 Content of patient labeling.
203.21 Class labeling.
203.22 Printing specifications for patient labeling.

203.23 Availability of FDA guideline patient labeling.
203.24 Dispensing and distribution of patient labeling.
203.25 Exemptions from patient labeling dispensing requirements.
203.30 Effective dates.

Authority: Secs. 502, 503, 505, 506, 507, 701, 52 Stat. 1050–1053 as amended, 1055–1056 as amended, 55 Stat. 851, 59 Stat. 463 as amended (21 U.S.C. 352, 353, 355, 356, 357, 371)); sec. 351, 58 Stat. 702 as amended (42 U.S.C. 262), and as otherwise noted.

Subpart A—General Provisions

§ 203.1 Status of patient labeling regulations.

This part sets forth requirements for patient labeling for prescription drug products. A prescription drug product that does not bear patient labeling that complies with all applicable regulations in this part is misbranded under section 502 of the Federal Food, Drug, and Cosmetic Act (21 U.S.C. 352); and the drug product, as well as the person who is responsible for the failure to comply, is subject to regulatory action.

§ 203.3 Definitions.

The following definitions apply to this part:

"Dispense" means the act of delivering a prescription drug product to a patient or an agent of the patient either:

(a) By a practitioner or an agent of a practitioner, either by direct administration or by transfer to the patient (or agent of the patient) for later administration; or

(b) By a pharmacist or an agent of a pharmacist under a lawful prescription of a practitioner.

"Dispenser" means a person who dispenses a drug product.

"Distribute" means the act of delivering (other than by dispensing) a drug product to any person.

"Distributor" means a person who distributes a drug product.

"Drug product" means a drug that contains the active drug ingredient, alone or combined with one or more components in a finished dosage form capable of being dispensed to a human (except for packaging, labeling, and final manipulation required immediately before dispensing).

"Patient" means any individual with respect to whom a drug product is intended to be, or has been, used.

"Patient labeling" means any written, printed, or graphic matter regarding and accompanying a drug product providing information for patients on its use.

"Manufacture" means the production, preparation, propagation, compounding, processing, or packaging into containers of a drug product, or the placing of labeling on a drug product. The term "manufacture" does not include the compounding of a drug product by a practitioner or pharmacist necessary for, and as an incident to, preparing the drug product for dispensing to a patient.

"Manufacturer" means (except as used in § 203.20(b)(2)(ii)) a person who manufactures a drug product.

"Pharmacist" means an individual licensed, registered, or otherwise permitted by the jurisdiction in which the individual practices to dispense drug products on prescription in the course of professional practice.

"Practitioner" means an individual licensed, registered, or otherwise permitted by the jurisdiction in which the individual practices to prescribe drug products in the course of professional practice.

Subpart B—General Requirements for Patient Labeling

§ 203.20 Content of patient labeling.

(a) Each prescription drug product shall be distributed and dispensed with patient labeling that meets all of the following conditions:

(1) The patient labeling is written in nontechnical language and is not promotional in tone or content.

(2) The patient labeling is based primarily on the prescription drug labeling that is directed to the practitioner and required for the drug product under § 201.100(d) of this chapter.

(3) The patient labeling complies with the requirements of paragraph (b) of this section.

(b) Except as provided in paragraph (c) of this section, patient labeling for a prescription drug product is required to contain the following information:

(1) A summary of the drug product's major indications, its contraindications for use, its serious adverse reactions and potential safety hazards, and a statement that the patient labeling should be read carefully.

(2) The following detailed information:

(i) If the labeling applies to only one drug product, the established name of the drug, if any, or for a licensed biological product, the proper name of the product. If the labeling applies to a class of drug products, the name of the drug class. The labeling may also bear the brand name and a physical description of the drug product or products to which it applies.

(ii) The name and place of business of the manufacturer, packer, or distributor (as required for the label of the drug product under § 201.1 of this chapter), or the name and place of business of the dispenser of the product (as required for the packer or distributor under § 201.1 of this chapter).

(iii) If the drug product is not for oral use, the route of administration.

(iv) A statement about the proper use of the drug product that includes a summary of the action of the drug and identifies the indications for use of the drug product. The patient labeling may not identify an indication for use of the product unless the indication is identified in the practitioner labeling for the product required under § 201.100(d) of this chapter. If there is a common belief that the drug product may be effective for an indication that is not included in the drug product's practitioner labeling and the preponderance of the evidence related to that indication suggests that the drug is ineffective for it, the patient labeling is required to state that there is a lack of evidence that the drug is effective for that indication.

(v) A statement of the circumstances under which the drug product should not be used for its labeled indications, that is, the contraindications to its use.

(vi) A statement of the serious adverse reactions and potential safety hazards concerning the use of the drug. Patient labeling is required to contain a specific warning related to a known use of the drug that is not included in the practitioner labeling for the product under § 201.100(d) of this chapter and for which substantial evidence of the effectiveness of the drug does not exist, if use of the product for that indication is associated with a serious risk or hazard. Serious adverse reactions or safety hazards concerning the use of a drug (particularly those which may lead to death or serious injury) are required to be placed in a prominently displayed box, boldface type, or to be otherwise emphasized.

(vii) A statement that identifies activities (such as driving or sunbathing) that the patient should avoid while taking the drug product and identifies drugs, foods, or other substances, such as tobacco or alcohol, that the patient should avoid because of their possible interaction with the drug.

(viii) A discussion of the risks to the unborn child from the use of the drug during pregnancy, including the long-term effects of the drug on the child, if any. If data on the long-term effects of the drug on the child are unavailable, a statement that the long-term effects of the drug on the child are unknown.

(ix) If the drug has a recognized use during labor or delivery, a discussion of the risks to the mother and child.

including the long-term effects of the drug on the child, if any. If data on the long-term effects of the drug are unknown, a statement that the long-term effects of the drug on the child are unknown. The term "recognized use" includes common and widespread use of the drug during labor and delivery, whether or not the drug product is labeled for that use.

(x) A discussion of available data and information about excretion of the drug in human milk and the associated risks to the nursing infant.

(xi) A discussion of specific pediatric indications, if any. If the drug has specific hazards associated with its use in pediatric patients, a description of the risks.

(xii) A discussion of special precautions that apply to the safe and effective use of the drug product in other identifiable patient populations, such as elderly patients.

(xiii) A statement of the available information about whether the drug is carcinogenic, mutagenic, or whether it affects reproduction.

(xiv) A statement of frequently occurring side effects from the use of the drug. The list of side effects may be categorized and summarized by organ system, by severity of the reaction, by frequency, by preventative or curative actions the patient may take, or by a combination of these methods. The approximate frequency of each side effect may be expressed in rough estimates or orders of magnitude.

(xv) A discussion of the risks, if any, to the patient of developing tolerance to or dependence on the drug.

(xvi) A statement of what the patient should do in case of overdosage of the drug or if the patient misses a scheduled dose of the drug product.

(xvii) A statement of special handling and storage conditions, if any.

(xviii) A statement that the drug product has been prescribed for the sole purpose of treating the patient's condition and must not be used for other conditions or given to others and a statement that the safety and effectiveness of the drug product depend upon the patient taking the drug product as directed.

(xix) A statement that the practitioner labeling for the drug product, required under § 201.100(c)(1) of this chapter, is available from the patient's pharmacist or practitioner.

(xx) The date, identified as such, of the most recent revision of the labeling placed prominently immediately after the last section of the labeling.

(c) The Food and Drug Administration may exempt the patient labeling for a particular drug product from any requirement of paragraph (b) of this section, if the information is clearly inapplicable to the patient's choice or use of the drug product, or the Food and Drug Administration concludes that the application of the requirement is not necessary for the protection of the public health. The Food and Drug Administration's conclusion that the patient labeling for a prescription drug product is exempt from any requirement of paragraph (b) of this section will be stated in the Food and Drug Administration's guideline patient labeling available for the product under § 203.23 or as a part of the approval of a new drug application for the product. A person may also request an advisory opinion from the Food and Drug Administration under § 10.85 of this chapter about whether information otherwise required may be omitted from the patient labeling of a drug product or class of drug products.

§ 203.21 Class labeling.

Patient labeling that applies to a class of drug products is permitted only if the Food and Drug Administration has made available guideline patient labeling under § 203.23 for the class of drug products.

§ 203.22 Printing specifications for patient labeling.

Patient labeling is required to be printed in accordance with the following specifications:

(a) The letter height (lowercase letter "o") may not be less than 1/16 inch.

(b) The body copy may not contain any lightface type, condensed type, small capital letters, or less than 1-point leading.

(c) The Food and Drug Administration encourages persons responsible for patient labeling for prescription drug products to develop improved formats for patient labeling through the imaginative use of type face, type size, boldness of type, spacing between lines, ink colors, paper type and color, examples and illustrations, and to produce patient labeling in languages other than English so that patient labeling will be more easily read, and better understood and remembered by patients.

§ 203.23 Availability of FDA guideline patient labeling.

A manufacturer, distributor, or dispenser may rely upon the current version of the Food and Drug Administration's guideline patient labeling for a particular drug product or a class of drug products as complying with the patient labeling requirements of this part. The Food and Drug Administration will make available guideline patient labeling for many prescription drug products under § 10.90(b) of this chapter. Guideline patient labeling may be prepared for a specific drug product or for a class of drug products. The Food and Drug Administration, however, will not prepare guideline patient labeling for all prescription drug products. In such cases, manufacturers shall prepare patient labeling as required under this part. A list of available guideline patient labeling for prescription drug products and copies of guideline patient labeling for specific drug products are available from the Hearing Clerk (HFA-305), Food and Drug Administration, Rm. 4-65, 5600 Fishers Lane, Rockville, MD 20857. Requests for guideline patient labeling should be in writing and directed to that office.

§ 203.24 Dispensing and distribution of patient labeling.

(a) Each dispenser of a prescription drug product for human use shall, when the product is dispensed, provide patient labeling that complies with this part to each patient (or to an agent of the patient) to whom the product is dispensed, unless an exemption applies under § 203.25. The dispenser shall provide the patient labeling directly to the patient (or to an agent of the patient) as a separate leaflet.

(b) The dispenser of a prescription drug product shall establish and follow a procedure to ensure that a patient can easily match the correct patient labeling text to the drug product, for example, by placing the prescription number on the patient labeling or placing the drug product's name on the label of the product that is dispensed to the patient.

(c) Except as provided in paragraph (d) of this section, each manufacturer of a prescription drug product shall provide patient labeling for the product as follows:

(1) The manufacturer shall provide patient labeling in or with each package of the drug product that the manufacturer intends to be dispensed to a patient (for example, each unit-of-use package).

(2) For a drug product in a bulk container, the manufacturer shall provide patient labeling in or with each bulk container in sufficient numbers of ensure that a dispenser can provide patient labeling to each patient to whom the drug product is dispensed. The label of each bulk container is required to instruct the dispenser to provide patient labeling to each patient to whom the drug product is dispensed. A manufacturer may provide and ship separately to practitioners, pharmacists, and other dispensers copies of patient

labeling that are in addition to the copies of patient labeling required to be provided under this section.

(d) A manufacturer may enter into a labeling agreement under this paragraph with any person to whom the manufacturer distributes the drug product. Such a manufacturer is exempt from the requirements of paragraph (c) of this section. A distributor may enter into a similar labeling agreement with any person to whom it distributes a drug product. A person to whom a drug product is distributed under a labeling agreement shall perform all the duties required of a manufacturer under § 203.20. A labeling agreement is required to comply with the requirements of § 201.150 of this chapter and contain the following:

(1) A copy of the patient labeling for the drug product.

(2) A promise by the person to whom the drug product is distributed that he or she will perform all the duties of the manufacturer under § 203.20.

(e) A distributor or dispenser of a prescription drug product may, in the absence of a labeling agreement, perform the duties of a manufacturer under § 203.20.

(f) A dispenser is not subject to section 510 of the Federal Food, Drug, and Cosmetic Act (21 U.S.C. 360) and Part 207 of this chapter which require the registration of producers of drugs and the listing of drugs in commercial distribution because of an act performed by the dispenser under this part.

§ 203.25 Exemptions from patient labeling dispensing requirements.

(a) A drug product dispensed to either a mentally disabled patient (including a patient who is mentally ill, mentally retarded, emotionally disturbed, or senile) or to a child who is legally incompetent to consent to medical treatment in the jurisdiction where the treatment is provided, complies with the patient labeling requirements of this part if the dispenser of the drug product provides the patient labeling to the parent or legal guardian of the patient.

(b) A drug product dispensed to a patient whose primary language is not English or to a patient who is blind complies with the patient labeling requirements of this part, if the dispenser provides the labeling written in the patient's primary language or in braille.

(c) A drug product is not required to be dispensed with patient labeling if the prescribing practitioner directs in writing in the prescription that the patient labeling not be provided to the patient or, in the case of an oral prescription, directs that the patient labeling not be provided to the patient and this direction is reduced promptly to writing by the dispenser and filed with the prescription. Notwithstanding such a direction, the dispenser of a prescription drug product shall provide patient labeling to any patient who requests it when the drug product is dispensed. This exemption does not apply if the Food and Drug Administration requires that the labeling for a particular drug product be provided to all patients under all circumstances.

(d) A drug product is not required to be dispensed with patient labeling if the product is dispensed to a patient in the course of emergency treatment. The dispenser may, however, make the patient labeling available to the patient before or after the drug product is dispensed.

(e) A drug product is not required to be dispensed with patient labeling if the drug product is dispensed to an institutionalized patient who is told when admitted, or as soon after admission as practicable, that patient labeling is available for the drug product and that the patient may review the labeling. A patient undergoing long-term care should be informed periodically about the availability of patient labeling for any prescribed drug products. The dispenser shall provide any patient who requests it access to the patient labeling for the drug product. This exemption does not apply, however, to a drug product that is dispensed to a patient during labor or delivery.

§ 203.30 Effective dates.

(a) Each prescription drug product is required to comply with the requirements of this Part 203 within 120 days after the publication of a notice in the Federal Register announcing the effective date of the requirements for a drug, drug class, or drug product, unless a different time period is stated in the notice. When the regulations are applied to a drug product, the agency will add the name of the product to this part.

(b)(1) Unless otherwise provided in the Federal Register notice published under paragraph (a) of this section, a prescription drug product that is initially introduced or initially delivered for introduction into interstate commerce after the effective date for the product is misbranded under section 502 of the Federal Food, Drug, and Cosmetic Act, if it does not bear patient labeling required under this part.

(2) The Federal Register notice may provide, in situations where the agency determines it necessary to protect the public health, that further distribution or dispensing of a drug product that does not bear patient labeling misbrands the drug product notwithstanding its lawful initial introduction or initial delivery for introduction into interstate commerce under this part.

(c) Holders of approved new drug applications for drug products that are subject to this part shall submit supplements under § 314.8(d) of this chapter to provide for the labeling required by this part. Establishments holding licenses for the manufacture of biological products shall submit amendments to the Bureau of Biologics under § 601.12 of this chapter to provide for the labeling required by this part. Unless otherwise provided in the Federal Register notice for the product published under paragraph (a) of this section, the labeling may be put into use without advance approval by the Food and Drug Administration.

(d) This part does not apply to the following:

(1) Isoproterenol inhalation drug products that are subject to § 201.305 of this chapter.

(2) Oral contraceptive drug products that are subject to § 310.501(a) of this chapter.

(3) Diethylstilbestrol drug products that are subject to § 310.501(b) of this chapter.

(4) Medroxyprogesterone acetate injection drug products that are subject to § 310.501a of this chapter.

(5) Intrauterine devices that are subject to § 310.502 of this chapter.

(6) Estrogenic drug products that are subject to § 310.515 of this chapter.

(7) Progestational drug products that are subject to § 310.516 of this chapter.

Interested persons may, on or before October 4, 1979, submit to the Hearing Clerk (HFA-305), Food and Drug Administration, Rm. 4-65, 5600 Fishers Lane, Rockville, MD 20857, written comments regarding this proposal. Four copies of all comments shall be submitted, except that individuals may submit single copies of comments. The comments are to be identified with the Hearing Clerk docket number found in brackets in the heading of this document. Received comments may be seen in the above office between 9 a.m. and 4 p.m., Monday through Friday.

In accordance with Executive Order 12044, the economic effects of this proposal have been carefully analyzed. A copy of the draft regulatory analysis is on file with the Hearing Clerk, Food and Drug Administration.

Dated: June 28, 1979.

Donald Kennedy,

Commissioner of Food and Drugs.

[FR Doc. 79-20796 Filed 7-5-79; 8:45 am]

BILLING CODE 4110-03-M

Federal Register

Friday
July 6, 1979

Part VIII

Department of Energy

Economic Regulatory Administration

Grants for Offices of Consumer Services

DEPARTMENT OF ENERGY

10 CFR Part 460

[Docket No. ERA-R-013]

Grants for Offices of Consumer Services

AGENCY: Economic Regulatory Administration, Department of Energy.

ACTION: Final Rule.

SUMMARY: The Economic Regulatory Administration (ERA) of the Department of Energy (DOE) is amending the regulations which established a program of grants for offices of consumer services as authorized by section 205 of the Energy Conservation and Production Act. These regulations were established by the Federal Energy Administration (FEA), a predecessor agency of DOE, to provide for a discretionary program of grants to States for the establishment or operation of State offices of consumer services to assist the representation of consumer interests in electric proceedings of utility regulatory commissions. DOE is revising these regulations in response to experience gained while operating the program and to bring the program under the current financial assistance procedures of DOE. Any State, the District of Columbia, any territory or possession of the United States, and the Tennessee Valley Authority are eligible to apply for a grant under this program. Grants will be awarded to a limited number of applicants selected annually on a competitive basis.

EFFECTIVE DATE: July 6, 1979.

FOR FURTHER INFORMATION CONTACT:

Nancy E. Tate, Office of Utility Systems, Economic Regulatory Administration, U.S. Department of Energy, 2000 M Street NW., Room 4312, Washington, D.C. 20461, Telephone: (202) 254-8266.

Joshua P. Smith, Office of the Assistant General Counsel for Conservation and Solar Applications, U.S. Department of Energy, 20 Massachusetts Avenue NW., Room 3228, Washington, D.C. 20585, Telephone: (202) 376-9469.

William L. Webb, Office of Public Information, Economic Regulatory Administration, U.S. Department of Energy, 2000 M Street NW., Room B-110, Washington, D.C. 20461, Telephone: (202) 634-2170.

SUPPLEMENTARY INFORMATION:

I. Background.
II. Discussion of Comments and DOE Response.
A. Purpose and Scope—§ 460.1.
B. Definitions—§ 460.3.
C. Grant Awards—§ 460.10.
D. Applications—§ 460.11.
E. Minimum Program Requirements—§ 460.12.
F. Allowable Expenditures—§ 460.13.
G. Eligible Consumer Groups—§ 460.14.
H. Selection of Grantees—§ 460.15.
III. The Final Regulations.
IV. Other Matters.

I. Background

Regulations establishing a grants program for offices of consumer services were issued by the FEA as Part 460, Chapter II, Title 10, of the Code of Federal Regulations on June 30, 1977 (42 FR 35163, July 8, 1977), and amended on August 10, 1977 (42 FR 41270, August 16, 1977). An advance notice of a program rule had been issued on May 13, 1977 (42 FR 24768, May 16, 1977) and the comments received in response to the notice were considered by FEA in preparing the regulations.

The regulations established a program of discretionary grants to States, pursuant to section 205 (42 U.S.C. 6805) of the Energy Conservation and Production Act (ECPA), Pub. L. 94-385, 90 Stat. 1125 *et seq.*, (42 U.S.C. 6801 *et seq.*). The purpose of this program is to provide financial assistance to establish or operate a State office of consumer services (Office) to support consumer representation in proceedings involving electric regulatory matters before a utility regulatory commission (commission).

In accordance with the evaluation criteria specified in the regulations, FEA awarded grants to the 12 highest ranking of the 41 applicants. DOE approved a set of general operating procedures for each grantee, as required by the regulations, and monitored each Office's performance against the regulations' requirements, the procedures, and the statement of work contained in its grant. DOE received a $2 million appropriation for this program in fiscal year 1978. With this level of program funding and the pending passage of the Public Utility Regulatory Policies Act of 1978 (PURPA), Pub. L. 95-617, 92 Stat. 3117, *et seq.*, DOE asked each grantee to submit an application for second year funding. These applications were reviewed and funded by DOE in September 1978.

Section 142 of PURPA amended Title II of ECPA by adding a section 208 which authorized to be appropriated amounts not to exceed $10,000,000 for each of fiscal years 1979 and 1980, to carry out section 205 of ECPA. Because of its experience gained while operating the program and changes in its financial assistance procedures, DOE issued proposed revisions to the program regulations on March 21, 1979 (44 FR 18448, March 27, 1979). DOE received 7 oral and 13 written comments on this Notice of Proposed Rulemaking.

Hearings were held in Washington, D.C., and Denver, Colorado. Most of the commenters and speakers at the hearings endorsed the program as proposed to be amended, and all comments were considered by DOE. A number of commenters made suggestions which have resulted in some changes in the regulations issued today.

II. Discussion of Comments and DOE Response

The following is a discussion of comments received and DOE's response to these comments. The discussion is organized according to the sections of the regulations.

A. *Purpose and Scope—§ 460.1.*—It was suggested that the proposed rule was unclear with respect to the availability of financial assistance for the establishment or operation of an Office. Some sections of the proposed rule referred to financial assistance for the establishment and operation of an Office, thereby implying a preference for those States which do not have existing offices. In response to this view, all references in the regulations to the purpose of the financial assistance available under this grant program have been made consistent with § 460.1 which states that grant funds are to be used "to establish or operate" an Office, thereby making clear that financial assistance under this program is equally available to all applicants.

A few commenters urged DOE to expand the scope and purpose of the program. One suggested that § 460.1 be amended to allow studies and research not related to a particular pending proceeding, but preparatory to an anticipated proceeding. DOE believes that funded research activities should be related to an Office's or assisted consumer group's involvement in a pending or anticipated proceeding. Grant funds should not be used for general research activities not related to involvement in proceedings.

Suggestions were also made that Offices be allowed to use grant funds for participation in natural gas proceedings and, further, an Office be permitted to participate in telephone regulatory proceedings. Because section 205 of ECPA limits assistance to Offices for involvement in electric utility matters, DOE is precluded from expanding the scope of the program to include other matters.

B. *Definitions—§ 460.3.*—Two commenters suggested that the definition of "proceeding" be amended to include judicial review of a decision

made by a utility regulatory commission. Section 205 of ECPA provides that the purpose of Offices is to assist consumers in their presentations before utility regulatory commissions. It is DOE's opinion that this statutory language precludes the use of grant funds to establish or operate Offices to assist consumers in a proceeding before an entity which is not a utility regulatory commission as defined in § 460.3 of the regulations.

One commenter addressed the question of an Office's intervening before a rate setting body, such as a city council acting with respect to a municipally-owned electric utility, other than the usual State utility regulatory commission. The regulations restrict an Office's interventions to proceedings of organizations which meet the definition of a utility regulatory commission found in § 460.3 of the regulations. An Office would, therefore, only be prohibited from intervening before a regulatory body that fixed, modified, approved, or disapproved rates for itself. In addition, it should be noted that an Office may intervene before a Federal agency which meets this definition.

C. *Grant Awards*—§ *460.10.*—DOE received some comments stating that the annual cycle of grant awards did not allow grantees to engage in adequate planning which would enable them to establish Offices with long-term viability. One of the comments suggested that grants be awarded competitively on a biennial basis. DOE agrees that a two-year grant award may be more practical in terms of an Office's long-term planning ability. However, this consideration must be weighed against two other factors: the authorization and annual appropriations process, and an opportunity for all potential applicants to be able to compete for grant awards. DOE has, therefore, determined that grants will be awarded annually on a competitive basis.

D. *Applications*—§ *460.11.*—One commenter stated that the August 15 application submission date will result in awards too near the close of the fiscal year to provide applicants adequate notice of their future funding situations. DOE selected August 15 in order to ensure that applicants have adequate time to prepare and submit applications subsequent to the issuance of final amended program regulations. In addition, § 460.11(a) provides that DOE may establish another date by notice published in the Federal Register. DOE believes that the flexibility provided by this provision adequately addresses the commenter's concern. It should be noted that, since DOE will accept only one application per State, a State must designate the department or agency which shall apply to DOE for a grant under this regulation.

DOE received a number of comments regarding the appropriateness of the $200,000 ceiling on grant awards. Nearly all of the commenters considered the $200,000 ceiling inadequate to effectively establish or operate an Office. After considering these views, DOE has decided to raise the grant award ceiling to $250,000 to reflect the increasing cost of establishing or operating an Office. While the ceiling has been set at $250,000, DOE encourages requests of less than this amount and urges applicants to request only those amounts of funds necessary during the grant period.

Several comments were received on the type of information that applicants are required to submit as part of the grant application.

One commenter suggested that applicants be required to (1) report on their audit systems in order to ensure the proper use of grant funds, and (2) demonstrate plans to monitor interventions to ensure that consumer interests are well represented by subgrantees. DOE has decided not to impose additional requirements on applicants because it believes the provisions of §§ 460.11 and 460.12 adequately ensure that grant funds are used responsibly and in the best interest of consumers.

The following suggestions were offered on the type of narrative information that should be required of applicants to describe their need for an Office: (1) DOE should retain the need factors contained in the original regulations; (2) need should be based in part on the number and type of hearings in which an Office expects to participate, and the size, number and resources of utilities in the State; (3) all applicants, regardless of whether they currently receive assistance to represent consumers, should be required to provide the same type of information to justify need; (4) need should be based, in part, on the applicant's and the utility regulatory commission's willingness to represent and consider the views of all, especially low income, consumers; (5) special consideration should be given to those Offices originally established under this grant program; (6) grants should not be available to establish well-financed Offices; and (7) need should be based, in part, on an Office's current inability to perform key functions or to participate in proceedings.

DOE believes that the need categories proposed in § 460.11(b)(11) are broad and flexible in covering need and adequately address the kinds of concerns expressed by the commenters. Accordingly, DOE has made no changes to this section as proposed to be amended.

E. *Minimum Program Requirements*—§ *460.12.*—Section 460.12(c) of the original regulations requires an Office to undertake activities either to assist consumer groups or to advocate on its own behalf a position it determines represents the position most advantageous to consumers. In response to DOE's invitation for comment on this provision, four commenters submitted suggestions. Two urged that grantees should be required to perform both functions; one suggested that the consumer group assistance function should be mandatory; and one agreed with the provision that the Office should have the discretion to select which of the two functions it would perform.

After reviewing these comments, DOE has decided to revise § 460.12(c) to provide that an Office be required both to advocate positions on its own behalf and to provide assistance (either technical or financial) to consumer groups. The purpose of this change is to promote the establishment of a broad-based Office and, therefore, avoid supporting Offices which are merely conduits of Federal funds to consumer groups or which may be out-of-touch with their consumer constituents. Although an Office is now required to assist consumer groups as one of its functions, the regulations allow but do not require Offices to provide financial assistance to such groups. This addresses the concern expressed by one commenter that some applicants do not have the authority to make subgrants to consumer groups.

It was suggested that Offices should be limited to the representation of residential consumers since they have no other resources and are the most severely affected by rate increases. DOE continues to believe that Offices should be broad-based and consider the interests of all consumers within the State. Therefore, the regulations do not restrict the classes of consumers an Office may assist.

One commenter suggested that DOE waive the minimum program requirements to allow a State office or agency to receive a grant if it proposed to pass through this funding to eligible consumer groups in the State. The minimum program requirements are based on the provisions of section 205 of ECPA. DOE believes that, in order to be

viable, an Office must be capable of representing consumer interests by intervening in proceedings, performing analyses, and assisting eligible consumer groups. In addition, any specified minimum program requirements must apply to all Offices.

F. *Allowable Expenditures—§ 460.13.*—Two commenters questioned the need for and clarity of § 460.13(a)(7) which proposed a $75 ceiling on the hourly rate to be paid to a consultant by an Office or subgrantee. One urged a waiver of this ceiling when the consultant possessed exceptional qualifications and the other questioned how to interpret this requirement in the absence of an hourly rate. DOE has determined that a specific hourly limitation is unnecessary since the other provisions of § 460.13 provide adequate and effective limitations on consultant costs. DOE has, therefore, removed the mandatory hourly consultant ceiling rate from the provisions of § 460.13, but expects that Offices would continue to engage consultants at reasonable hourly rates.

G. *Eligible Consumer Groups—§ 460.14.*—Two comments were offered on the criteria for determining consumer group eligibility for assistance.

The first comment expressed concern that the provisions of § 460.14 left open the possibility that grant assistance could be used to promote all types of narrow consumer interests or favorable treatment of certain consumer groups over other consumers. The regulations do not restrict eligibility to a specific consumer class or group. DOE believes that the eligibility standards should provide Offices with the flexibility necessary to determine which consumer groups are most in need of assistance.

The second comment urged that the class action standard set forth in proposed § 460.14(b)(2) be deleted. DOE continues to believe that when the cumulative consequences of the outcome of a proceeding for consumers are exceptionally important, the consumer interest should be protected regardless of ability to pay. Therefore, DOE has determined that the class action standard is an appropriate mechanism for meeting some types of consumer needs.

H. *Selection of Grantees—§ 460.15*—One commenter asserted that all States that do not currently have an Office should be considered to have an equal need for an Office and that these States should, therefore, be evaluated solely on the basis of the quality and feasibility of their applications. DOE believes that each State's need for and commitment to an Office are different and cannot be assumed to be equal. The evaluation criteria and the grant application format set forth in the regulations provide each applicant with the opportunity to describe its unique need for an Office.

DOE was urged by a commenter to give greater weight under the need criteria to the percentage of per capita income spent for electricity for residential use. DOE agrees that this factor is important but believes that it has been given sufficient weight in the regulations.

A suggestion was made to reinstate a third factor relating to the percent of electricity in a State generated by natural gas, which had been included in the original program regulations. DOE continues to believe that the two need factors set forth in the proposed amendments are sufficient quantitative indicators of a State's need for an Office and, therefore, has retained only these two factors.

One commenter asserted that selection criteria should include the quality of performance to date by any applicant currently operating an Office. DOE believes that § 460.15(c), dealing with evaluation of a State's need for an Office, adequately addresses the concern expressed in this comment. The need description of an Office currently receiving outside financial assistance includes a detailed description of the Office's activities and performance to date. Based on such description, DOE will be able to evaluate the performance of an existing Office and thereby make a determination regarding need.

III. The Final Regulations

The regulations are adopted as proposed except for the modifications described above and minor clarifying and conforming modifications.

IV. Other Matters

DOE has determined that these regulations are significant as that term is used in Executive Order 12044 and amplified in DOE Order 2030. These regulations are considered significant because they provide for institutionalized access for consumers in proceedings and will: (1) Enhance the ability of consumers to have adequate energy supplies at reasonable prices; (2) enhance the likelihood that objectives of national energy policy will be met; and (3) have the continued interest of Congress and the public. DOE has further determined that these regulations are not likely to have a major impact as defined by Executive Order 12044 and as amplified in DOE Order 2030. Accordingly, no regulatory analysis has been performed.

In accordance with section 404 of the Department of Energy Organization Act (DOE Act) (Pub. L. 94-91, 42 U.S.C. 7101 *et seq.*) the Federal Energy Regulatory Commission (FERC) received a copy of the proposed rule. As of June 28, 1979, the date by which FERC determination under section 404(a) was to have been made, FERC had not determined that the proposed regulation would significantly effect any function within its jurisdiction under sections 402(a)(1), (b), (c)(1) of the DOE Act.

(Energy Conservation and Production Act, Pub. L. 94-385 (42 U.S.C. 6801 *et seq.*), as amended by the Public Utility Regulatory Policies Act of 1978, Pub. L. 95-617 (16 U.S.C. 2601 *et seq.*); Department of Energy Organization Act, Pub. L. 95-91 (42 U.S.C. 7101 *et seq.*))

In consideration of the need to make financial assistance available for the establishment or operation of Offices and to ensure sufficient time for the preparation and submission of grant applications, good cause exists to make this regulation effective upon publication, rather than 30 days thereafter as would otherwise be required by the Administrative Procedure Act. Accordingly, these amendments shall be effective upon publication in the Federal Register.

In consideration of the foregoing Part 460 of Chapter II, Title 10 of the Code of Federal Regulations, is amended as set forth below.

Issued in Washington, D.C., on June 29, 1979.

David J. Bardin,

Administrator, Economic Regulatory Administration.

Chapter II of Title 10, Code of Federal Regulations, Part 460, is revised to read as follows:

PART 460—GRANTS FOR OFFICES OF CONSUMER SERVICES

Sec.

460.1 Purpose and scope.
460.2 General requirements.
460.3 Definitions.
460.10 Grant awards.
460.11 Applications.
460.12 Minimum program requirements.
460.13 Allowable expenditures.
460.14 Eligible consumer groups.
460.15 Selection of grantees.
460.16 Grant termination.

Authority: Energy Conservation and Production Act, Pub. L. 94-385 (42 U.S.C. 6801 *et seq.*), as amended by the Public Utility Regulatory Policies Act, Pub. L. 95-617 (16 U.S.C. 2601 *et seq.*); Department of Energy Organization Act, Pub. L. 95-91 (42 U.S.C. 7101 *et seq.*).

§ 460.1 Purpose and scope.

This part contains the regulations adopted by the Department of Energy to conduct a discretionary grant program to provide Federal financial assistance to a State. This financial assistance shall be used to establish or operate a State office of consumer services which shall assist the representation of consumer interests in proceedings before a utility regulatory commission pursuant to section 205, 42 U.S.C. 6805, of the Energy Conservation and Production Act, Pub. L. 94-385, 90 Stat. 1125 *et seq.*, as amended. Grants will be awarded annually on a competitive basis to a limited number of States.

§ 460.2 General requirements.

Except where this part provides otherwise, the award and administration of grants under this part will be governed by the following:

(a) Office of Management and Budget Circular A-73, entitled "Audit of Federal Operations and Programs;"

(b) Federal Management Circular 74-4, entitled "Cost Principles Applicable to Grants and Contracts with State and Local Governments;"

(c) Office of Management and Budget Circular A-89, entitled "Catalog of Federal Domestic Assistance;"

(d) Office of Management and Budget Circular A-95, entitled "Evaluation, Review and Coordination of Federal and Federally Assisted Programs and Projects;"

(e) Office of Management and Budget Circular A-97, entitled "Rules and Regulations Permitting Federal Agencies to Provide Specialized or Technical Services to State and Local Units of Government under Title III of the Intergovernmental Coordination Act of 1968;"

(f) Office of Management and Budget Circular A-102, entitled "Uniform Administrative Requirements for Grants-in-Aid to State and Local Governments;"

(g) Office of Management and Budget Circular A-110, entitled "Grants and Agreements with Institutions of Higher Education, Hospitals and Other Nonprofit Organizations;"

(h) Treasury Circular 1082, entitled "Notification to States of Grant-in-Aid Information;"

(i) Treasury Circular 1075, entitled "Regulations Governing Withdrawal of Cash from the Treasury for Advances under Federal Grant and Other Programs;" and

(j) DOE Assistance Regulations (10 CFR Part 600).

§ 460.3 Definitions.

As used in this part—

"Act" means the Energy Conservation and Production Act, Pub. L. 94-385, 90 Stat. 1125 *et seq.* (42 U.S.C. 6801 *et seq.*), as amended.

"Commission" means a utility regulatory commission.

"Consultant" means a person who contracts to provide personal services for an Office and includes an attorney, accountant, economist, or other expert witness.

"Consumer" means a person who buys electricity for purposes other than resale.

"Consumer group" means an association or organization consisting of not less than three individuals that represents a consumer interest, and may include a corporation, nonprofit corporation, unincorporated association, unit of general purpose local government, tribal organization, law firm, committee, or association of concerned consumers.

"Consumer interest" means a potential benefit or detriment to a consumer from the social, economic or environmental consequences of the outcome of a proceeding.

"Consumer interest office" means a department, agency, or office of a State which engages in activities on behalf of a consumer interest.

"DOE" means the Department of Energy.

"Electric utility" means a person, State agency or Federal agency which sells electric energy for purposes other than resale.

"Federal agency" means an agency or instrumentality of the United States.

"Fiscal year" means the 12 month period beginning October 1.

"Governor" means the chief executive officer of a State or territory, the Mayor of the District of Columbia, or the Chairman of the Tennessee Valley Authority.

"Grantee" means the State or other entity named in the notification of grant award as the recipient.

"Kilowatt-hour" means a unit of measuring electricity usage which represents a unit of work or energy equal to that expended by one kilowatt in one hour.

"kWh" means a kilowatt-hour.

"Local law" means the laws in force and effect in a State and includes the statutes, rules and regulations, judicial decisions, administrative findings and determinations and executive orders and proclamations, as enforced by the State and its judicial system.

"Office" means an Office of Consumer Services.

"Person" means an individual, partnership, corporation, unincorporated association or any other group, entity or organization.

"Proceeding" means a proceeding before a utility regulatory commission involving consideration of electric rates or other proposed electric regulatory actions involving an electric utility.

"Secretary" means the Secretary of the Department of Energy.

"State" means a State, the District of Columbia, American Samoa, Guam, Puerto Rico, the Virgin Islands, the Trust Territory of the Pacific Islands and the Tennessee Valley Authority.

"Subgrantee" means the eligible consumer group named as the recipient of a grant which shall be made by an Office.

"Technical assistance" means providing data, technical analyses, or other information necessary to make a presentation in a proceeding and may include preparing testimony, providing legal assistance, and providing expert testimony.

"Tribal organization" means the recognized governing body of an Indian Tribe, or any legally established organization of Native Americans which is controlled, sanctioned or chartered by such governing body.

"TVA" means Tennessee Valley Authority.

"Unit of general purpose local government" means any city, county, town, parish, village or other general purpose political subdivision of a State.

"Utility regulatory commission" means TVA or a regulatory authority, empowered by Federal or local law to fix, modify, approve, or disapprove rates for the sale of electric energy by an electric utility other than itself.

§460.10 Grant awards.

(a) DOE shall provide financial assistance to a State from sums authorized and appropriated for any fiscal year, only upon annual application.

(b) Grants shall be awarded to States, selected at the discretion of DOE on the basis of the evaluation made in accordance with § 460.15, for the establishment or operation of an Office.

§460.11 Applications.

(a) To be eligible to receive a grant under this part a State shall submit an application in conformity with paragraph (b) of this section, on a form to be provided by DOE. This application shall be received by DOE on or before 5:30 p.m. e.d.t. on August 15th preceding the fiscal year for which financial assistance is sought, or such other date

as DOE may establish by notice published in the Federal Register. DOE shall annually send a copy of this regulation and an application form to the Governor of every State and invite him or her to submit an application.

(b) Each application shall include:

(1) An overview statement of the specific goals and objectives of the proposed Office and an explanation of how they relate to the goals and objectives of an existing State consumer interest office and any commission before which the Office intends to assist the representation of consumer interests;

(2) A legal opinion setting forth the manner in which the State has complied, or will in a timely manner, comply with the requirements of § 460.12(a);

(3) Where applicable an explanation of the authority, functions, organization, activities, budget and financial resources of a consumer interest office operating within the State;

(4) An assurance that Federal funds requested under this part will not be used to supplant State or other funds appropriated to perform the functions proposed to be conducted in this application;

(5) A statement of which of the functions set forth in § 460.12(a)(2) are proposed to be carried out by the Office with financial assistance under this part and a description of the specific activities through which these functions will be carried out;

(6) A detailed description of how the Office will meet the minimum program requirements prescribed by § 460.12(b) and a timetable for satisfying these requirements;

(7) The amount of Federal financial assistance being applied for under this part, which shall not exceed $250,000 for any fiscal year, and a budget including identification and a description of resources or financial assistance which shall be provided to an Office from sources other than the financial assistance provided under this part;

(8) A description of the organizational structure of the Office including the extent of coordination proposed between the Office and other parts of the State government representing consumers or regulating electric utilities;

(9) A description of the responsibilities, experience and qualifications, if known, of key personnel and consultants proposed to be used by the Office;

(10) A statement of the task sequence and a timetable for meeting the requirements of § 460.12 (a) and (b), and for implementing the activities for a 12 month period, by calendar quarter, beginning October 1, of the fiscal year for which financial assistance is sought;

(11) A detailed description of the State's need for an Office operated with Federal financial assistance which shall identify the conditions and circumstances existing within the State that give rise to that need, including the following:

(i) If the applicant currently receives State, Federal, or other financial assistance (such as assessments from utilities) to represent consumers in proceedings, the description shall include—

(A) The applicant's accomplishments to date with respect to electric utility regulatory matters including—

(*1*) Studies conducted by the applicant which were directly related to its involvement in a proceeding;

(*2*) Proceedings in which the applicant was involved, issues discussed, commission decisions rendered, and known impact, if any, of this involvement on the outcome of the proceedings; and

(*3*) Assistance provided by the applicant to consumer groups on electric utility regulatory matters.

(B) The degree to which financial assistance obtained from sources other than under this part is inadequate to perform the activities for which DOE financial assistance under this part is requested. This description shall include a discussion of the prospects for increases or decreases in the existing State, Federal or other financial assistance.

(ii) If the applicant does not currently receive State, Federal, or other financial assistance (such as assessments from utilities) to represent consumers in proceedings, this description shall include—

(A) The applicant's and the State's past attempts to obtain funding from State, Federal or other sources to represent consumer interests and the reasons that these attempts were unsuccessful;

(B) The magnitude of the electric utility regulatory matters in the State requiring consumer representation in proceedings including—

(*1*) Recent increases in average electric bills of different types of consumers;

(*2*) The commission's positions on rate reform initiatives; and

(*3*) The type, quality and amount of participation by consumer groups in proceedings within the State and the responsiveness of the commission to these consumer interventions.

(C) The resources available to any other consumer interest office in the State which represents consumer interests in proceedings.

(D) The potential benefits to consumers in the State if Federal financial assistance under this part is made available by DOE.

§ 460.12 Minimum program requirements.

(a) Prior to the expenditure of any grant funds and no later than 4 months from the date of a notification of grant award made under this part, a grantee shall have in existence or establish an Office which—

(1) Is a consumer interest office;

(2) Is empowered and has authority under local law to—

(i) Make general factual assessments of the impact of proposed electric utility rate changes and other proposed regulatory actions upon consumers, including residential consumers;

(ii) Provide technical or financial assistance to an eligible consumer group meeting the requirements of § 460.14 in the presentation of its position in a proceeding; and

(iii) Advocate on its own behalf, a position which it determines represents the position most advantageous to consumers, including residential consumers, taking into account developments in utility rate design reform; and

(3) Is independent of a commission with respect to the following—

(i) The commission has no direct control over the Office's budget or its disbursement of funds;

(ii) The commission has no authority over the hiring, management, or dismissal of the personnel employed by an Office; and

(iii) Employees of the Office do not perform services for, report to, or act on behalf of, the commission.

(b) Each Office shall develop and publish within 4 months of the date of a grant award or 3 months from the date upon which the Office meets the requirements of paragraph (a) of this section, whichever shall be later, procedures to be approved by DOE, to—

(1) Determine whether a consumer group is an eligible consumer group in accordance with the requirements of this part;

(2) Provide technical assistance to an eligible consumer group, or financial assistance on a full funding or cost sharing basis to a subgrantee to make one or more presentations in a proceeding;

(3) Establish priorities for providing technical or financial assistance to eligible consumer groups taking into consideration—

(i) Consumer interests;

(ii) The consumer interest of, or represented by, an eligible consumer group;

(iii) The composition, diversity and number of members of an eligible consumer group;

(iv) The relative effectiveness of an eligible consumer group's proposed presentation, including the extent to which—

(A) The eligible consumer group is familiar with and understands the subject matter and issues involved in the proceeding;

(B) Its proposed presentation is feasible and well-conceived; and

(C) The eligible consumer group can effectively represent a consumer interest in a proceeding;

(v) The uniqueness or novelty of an eligible consumer group's position or point of view; and

(vi) Where financial assistance is to be provided, the experience and expertise of a consultant which an eligible consumer group intends to engage;

(4) Advocate on its own behalf a position in a proceeding which it determines represents the position most advantageous to consumers which shall involve the performance of activities including—

(i) Consideration of views and data obtained from consumers through the use of such information gathering techniques as a public hearing, survey, or consumer advisory committee, to ensure that the Office obtains and considers the broadest possible spectrum of consumer views;

(ii) Obtaining qualified witnesses and preparing testimony and other submissions for presentation in a proceeding;

(iii) Analysis and consideration of developments in innovative utility rate design reform;

(5) Make general factual assessments of the impact of proposed rate changes and other proposed regulatory actions upon consumers; and

(6) Identify consumer groups and provide them with information concerning this program and its operation.

(c) After complying with the requirements of paragraph (b) of this section, an Office shall carry out activities for the functions prescribed in § 460.12(a)(2)(ii) and (iii). DOE may upon application by a grantee or Office and for good cause shown, extend the time limit set to meet the requirements of paragraphs (a) and (b) of this section.

§ 460.13 Allowable expenditures.

(a) Financial assistance provided under this part shall be used for the establishment or operation of an Office, and grant funds awarded in any year shall only be expended for the following—

(1) Compensation of employees of the Office;

(2) No more than 10 percent shall be used for administrative expenses of an Office exclusive of compensation provided under subparagraph (1) of this paragraph;

(3) No more than 20 percent may be paid to contract for the use of computers and similar equipment for the storage and analysis of data;

(4) No more than 45 percent may be paid for the services of consultants: *Provided*, That no consultant shall receive in excess of 20 percent, subject to the aggregate limitation of subparagraph (6) of this paragraph;

(5) Payments to subgrantees to carry out the functions described in § 460.12(a)(2)(ii) in accordance with the requirements of this part: *Provided*, That total payments to subgrantees shall not exceed 45 percent of the grant funds awarded, subject to the aggregate limitation of subparagraph (6) of this paragraph;

(6) No more than 60 percent in the aggregate may be paid for the services of consultants and to subgrantees under paragraphs (4) and (5) of this paragraph;

(7) Payments to a consultant by an Office or subgrantee shall not exceed the prevailing market rate for the level and quality of the personal service; and

(8) Reasonable costs of an Office or subgrantee for travel and transportation for an employee, consultant or a person performing services, such as a volunteer.

(b) No grant funds shall be expended until a State has established an Office which meets the requirements of § 460.12(a).

(c) For the purposes of subparagraph (a)(4) of this section, a consultant shall include—

(1) Any person which employs or otherwise uses the personal services of the consultant including employment by a partnership, corporation, sole proprietorship, or other business enterprise engaged in performing personal services;

(2) Any person in which the consultant owns 10 percent or more of the stock, including options to purchase stock, or other securities issued by a corporation, or any person engaged in performing personal services in which the consultant has a financial interest which is equal to or exceeds 10 percent;

(3) Any person, such as a parent company or affiliate, which owns 10 percent or more of the stock, including options to purchase stock, of the consultant, or other securities issued by the consultant, or owns a financial interest of any kind in the consultant which is equal to or exceeds 10 percent;

(4) Any business entity engaged in performing personal services including a corporation, partnership, consortium or other enterprise in which the consultant is an officer or director, partner or active principal; and

(5) Any business entity including a corporation, partnership, consortium or other business enterprise engaged in providing personal services in which the consultant participates in a profit-sharing program.

§ 460.14 Eligible consumer groups.

No consumer group shall receive financial or technical assistance from an Office unless—

(a) The consumer group's—

(1) Representation of a consumer interest would substantially contribute to a full and fair determination of the issues to be considered in the proceeding; and

(2) Participation in the proceeding is necessary to the effective representation of the consumer interest; and

(b) The consumer interest would not be effectively represented because—

(1) The consumer group does not have reasonably available and cannot reasonably obtain sufficient resources to participate effectively in the proceeding; or

(2)(i) The economic gain or loss to the consumer group and any consumer with regard to the outcome of the proceeding is small relative to the costs of effective participation in the proceeding; and

(ii) The costs of effective participation are small relative to the social, economic or environmental consequences of the outcome of the proceeding.

§ 460.15 Selection of grantees.

(a) DOE shall evaluate an application submitted in accordance with § 460.11 through the use of a rating system with a total of 100 points under which up to 50 points may be scored for the quality of the proposed Office and up to 50 points may be scored for a State's need to establish or operate an Office.

(b) DOE shall evaluate the quality of a proposed Office on the basis of its conceptualization and feasibility of its implementation taking into account—

(1) The precision with which goals and objectives for the Office are defined;

(2) Whether the activities proposed for the Office will effectively carry out the functions selected in accordance with § 460.11(b)(5);

(3) The responsibilities, experience and competence of the key personnel and consultants proposed for the Office;

(4) The organizational structure of the Office including the extent of coordination proposed between the Office and other parts of the State government representing consumers or regulating electric utilities;

(5) The feasibility of the Office complying with the requirements of § 460.12;

(6) The task sequence for activities and the likelihood that an Office can meet the schedule of the proposed timetable as required by § 460.11(b)(10); and

(7) The adequacy of the budget required by § 460.11(b)(7) in relationship to the proposed activities.

(c) DOE shall evaluate a State's need for an Office based upon—

(1) The magnitude of need demonstrated in the description provided in response to § 460.11(b)(11), for which up to 25 points may be scored; and

(2) DOE's analysis of a State's need for an Office based on the State's ranking against the following needs factors as computed by DOE, for which up to 25 points may be scored:

(i) The average revenue per kWh calculated for all electric utilities within the State; and

(ii) The percentage of per capita income of residential consumers within the State which is spent for electricity for residential use.

§ 460.16 Grant termination.

(a) Grants may be terminated for convenience at any time by mutual agreement of both the grantee and DOE.

(b) Grants may be suspended or terminated for cause when DOE finds there is a failure by the grantee to comply substantially with the provisions of this part. A suspension or termination notice shall be issued in accordance with § 460.114 of Subpart B of the DOE Assistance Regulation (10 CFR 600).

(c) DOE shall issue this notice in the form of a written notice mailed by registered mail, return receipt requested, to the grantee and shall include (1) a statement of the reasons for the finding referred to in paragraph (b) of this section together with an explanation of any remedial action which, if undertaken, would result in compliance; and (2) the date upon which the grant will be terminated.

(d) A grantee which receives the notice referred to in paragraph (b) of this section may file a written response containing an explanation of how it will comply with the requirements of this part, or a statement of its views and supporting data explaining why the grant should not be terminated. This response shall be made by registered mail, return receipt requested, not later than 10 days after the receipt of the notice referred to in paragraph (c) of this section.

(e) Within 20 days after the grantee's receipt of notice in accordance with the procedures set forth in paragraph (c) of this section, the Secretary, after consideration of any response filed by the grantee, shall determine whether or not to terminate the grant for failure to comply substantially with the requirements of this part and issue a written statement explaining the reasons for this determination.

(f) Upon issuance of the notice referred to in paragraph (b) of this section, DOE may suspend payments to any grantee pending a final determination. If the Secretary makes a final determination of substantial failure to comply, the grantee will be ineligible to participate in the program unless and until DOE is satisfied that the failure to comply has been corrected.

[FR Doc 79-20947 Filed 7-5-79; 8:45 am]
BILLING CODE 6450-01-M