10-10-79
Vol. 44 No. 197
Pages 58493-58670

federal register

Wednesday
October 10, 1979

Highlights

58493 National Port Week, 1979 Presidential proclamation

58546 Asbestos Programs HEW/NIOSH announces grant applications for demonstration programs for removal or treatment in schools; applications by 12-1-79

58554 Fundamental Earthquake Studies of Earthquake Prediction and Hazard Mitigation Program NSA accepts research proposals for fiscal year 1980

58554 Physically Handicapped in Science Program NSF plans to award funds; project proposals by 11-15-79

58538, 58544 Privacy Act DOD/Army and GSA issue documents affecting systems of records

58542 Privacy Act FCSC issues annual publication of systems of records

58602 Air Pollutants EPA proposes specific requirements revisions on continuous emission monitoring; comments by 12-10-79 (Part II of this issue)

CONTINUED INSIDE

FEDERAL REGISTER Published daily, Monday through Friday, (not published on Saturdays, Sundays, or on official holidays), by the Office of the Federal Register, National Archives and Records Service, General Services Administration, Washington, D.C. 20408, under the Federal Register Act (49 Stat. 500, as amended; 44 U.S.C. Ch. 15) and the regulations of the Administrative Committee of the Federal Register (1 CFR Ch. I). Distribution is made only by the Superintendent of Documents, U.S. Government Printing Office, Washington, D.C. 20402.

The Federal Register provides a uniform system for making available to the public regulations and legal notices issued by Federal agencies. These include Presidential proclamations and Executive Orders and Federal agency documents having general applicability and legal effect, documents required to be published by Act of Congress and other Federal agency documents of public interest. Documents are on file for public inspection in the Office of the Federal Register the day before they are published, unless earlier filing is requested by the issuing agency.

The Federal Register will be furnished by mail to subscribers, free of postage, for $5.00 per month or $50 per year, payable in advance. The charge for individual copies of 75 cents for each issue, or 75 cents for each group of pages as actually bound. Remit check or money order, made payable to the Superintendent of Documents, U.S. Government Printing Office, Washington, D.C. 20402.

There are no restrictions on the republication of material appearing in the Federal Register.

Area Code 202-523-5240

Highlights

58642 **National Emission Standards and Generic Standards for Hazardous Air Pollutants** EPA proposes policy and procedures for identifying, assessing, and regulating airborne substances posing a risk of cancer; comments by 2-7-80 and 12-10-79, intent to appear at a hearing by 11-26-79 (2 documents) (Part IV of this issue).

58551 **Air Pollution Control** National Commission on Air Quality reviews alternate approaches to achieving national air quality goals; comments by 11-1-79

58499, 58500 **Overseas Military Personnel Charters** CAB reduces minimum chater size requirements; effective 10-10-79 (4 documents)

58500 **Standard Fare Levels for Certified Air Carriers** CAB specifies types of costs resulting from employment discrimination that must be reported as nonoperating expenses and not for establishing standard fare levels; effective 11-9-79

58508 **Mobile Home Loans** VA increases maximum permissible interest rate; effective 10-3-79

58638 **Simultaneous Oil and Gas Drawing** Interior/BLM proposes rules in a redrawing of entry cards; comments by 12-10-79 (Part III of this issue)

58509 **Nondiscrimination in Federally Assisted Programs** HEW/Sec'y issues policy interpretation for regulations under Title VI of the Civil Rights Act of 1964

58503 **Local Rent Control** HUD/FHC amends rules in the case of unsubsidized projects; effective 11-9-79

58527 **Mortgage Insurance and Loans Program** HUD changes effective date from 10-15-79 to 10-25-79 for mortgage eligibility to pay a discount on fee title purchase

58597 **Sunshine Act Meetings**

Separate Parts of This Issue

58602 **Part II, EPA**
58638 **Part III, Interior/BLM**
58642 **Part IV, EPA**

Contents

Federal Register
Vol. 44, No. 197
Wednesday, October 10, 1979

The President
PROCLAMATIONS
58491 Port Week, 1979, National (Proc. 4695)

Executive Agencies

Agricultural Marketing Service
RULES
58495 Olives grown in Calif.

Agriculture Department
See also Agricultural Marketing Service; Forest Service.
RULES
Authority delegations by Secretary and General Officers:
58495 Deputy Secretary et al.; foreign investment disclosure responsibilities

Air Quality National Commission
NOTICES
58551 Air pollution control; alternative policies

Alcohol Fuels, National Commission
NOTICES
58550 Meetings

Army Department
NOTICES
58538 Privacy Act; systems of records

Civil Aeronautics Board
RULES
Accounts and reports for certificated air carriers; uniform system:
58500 Employment discrimination; reporting of expenses
Charters:
58499 Overseas military personnel; reduction of
58500 minimum size requirements (4 documents)
NOTICES
Hearings, etc.:
58531 Miami-London case
58597 Meetings; Sunshine Act

Commerce Department
See Industry and Trade Administration; National Bureau of Standards; National Oceanic and Atmospheric Administration.

Community Planning and Development, Office of Assistant Secretary
RULES
Slum clearance and urban renewal:
58506 Rehabilitation loan program (Section 312); corporate or partnership borrowers personal liability; interim rule; correction

Customs Service
PROPOSED RULES
Country of origin marking:
58527 Bolts, nuts, and rivets; extension of time
NOTICES
58575 Regulatory reporting requirements, review; inquiry

Defense Department
See Army Department.

Delaware River Basin Commission
NOTICES
58539 Water resources program, etc.; hearing

Economic Regulatory Administration
NOTICES
Meetings:
58583 Fuel Oil Marketing Advisory Committee
Natural gas; fuel oil displacement certification applications:
58595 Asarco, Inc.
58584 Phelps Dodge Corp.
Remedial orders:
58583 Coleman's Standard
58583 Herb's Union 76
58583 Jim's Marathon
58584 Palatine 76 Service
58584 Stephen's Standard

Energy Department
See also Economic Regulatory Administration.
NOTICES
International atomic energy agreements; civil uses; subsequent agreements:
58596 Japan

Environmental Protection Agency
PROPOSED RULES
Air pollutants, hazardous; National emission standards:
58642 Airborne carcinogens; identification; policies and procedures
58661 Carcinogenic organic chemical sources; generic standards; advance notice
Air pollution; standards of performance for new stationary sources:
58602 Continuous monitoring performance specifications
NOTICES
Air pollution control, new motor vehicles and engines:
58540 California; public hearing

Federal Communications Commission
NOTICES
58541 AM broadcast applications ready and available for processing
58541 FM broadcast applications ready and available for processing
58597 Meetings; Sunshine Act (2 documents)

Federal Election Commission
NOTICES
58599 Meetings; Sunshine Act

Federal Energy Regulatory Commission
NOTICES
Hearings, etc.:
58585 Arkansas Louisiana Gas Co.
58586 Columbia Gas Transmission Corp.
58587, 58588 Florida Gas Transmission Co. (2 documents)
58588 Lehigh Portland Cement Co. et al.
58588 Mississippi River Transmission Corp.
58590 Natural Gas Pipeline Co. of America
58591 Northern Natural Gas Co.
58592 Panhandle Eastern Pipe Line Co.
58592 Public Service Electric & Gas Co.
58593 Southern Natural Gas Co.
58593 South Texas Natural Gas Gathering Co.
58594 Sun Oil Co.
58594, 58595 Texas Eastern Transmission Corp. (2 documents)
Meetings:
58585 Revision of Rules of Practice and Procedure Advisory Committee
58599 Sunshine Act

Federal Home Loan Bank Board
NOTICES
58599 Meetings; Sunshine Act (2 documents)

Federal Housing Commissioner—Office of Assistant Secretary for Housing
RULES
Mortgage and loan insurance programs:
58503 Fee title purchase; mortgagor eligibility to pay a discount; correction
58503 Rent control, local; preemption determinations; unsubsidized projects

Federal Reserve System
NOTICES
Applications, etc.:
58543 Chemical New York Corp. et al.
58543 Industrial National Corp. et al.
58599, 58600 Meetings; Sunshine Act (2 doucments)

Federal Trade Commission
PROPOSED RULES
Consent orders:
58516 Glass, Harvey, M.D.
58518 San-Mar Laboratories, Inc., et al.

Foreign Claims Settlement Commission
NOTICES
58542 Privacy Act; systems of records; annual publication

Forest Service
NOTICES
Environmental statements; availability, etc.:
58531 Modoc National Forest, land and resource management plan, Calif.

General Services Administration
NOTICES
58544 Privacy Act; system of records

Health, Education, and Welfare Department
See also National Institute for Occupational Safety and Health; Public Health Service.
RULES
Nondiscrimination:
58509 Federally-assisted programs; policy interpretation
NOTICES
Meetings:
58545 Financing Elementary and Secondary Education Advisory Panel

Housing and Urban Development Department
See also Community Planning and Development, Office of Assistant Secretary; Federal Housing Commissioner—Office of Assistant Secretary for Housing.
RULES
Organization and functions:
58507 Federal Disaster Assistance Administration; transfer of regulations to FEMA
PROPOSED RULES
Low income housing:
58528 Fair market rents for new construction and substantial rehabilitation (Section 8); all areas; transmittal to Congress
Mortgage and loan insurance programs:
58527 Single family mortgages, insured, prepayment; transmittal to Congress

Industry and Trade Administration
NOTICES
Scientific articles; duty free entry:
58531 Battelle Memorial Institute et al.
58533 Buffalo General Hospital
58533, 58534 National Radio Astronomy Observatory Associated Universties, Inc.
58534 West Virginia Institute of Technology et al.

International Trade Commission
NOTICES
58600 Meetings; Sunshine Act (2 documents)

Interior Department
See Land Management Bureau; National Park Service; Surface Mining Reclamation and Enforcement Office.

Interstate Commerce Commission
RULES
Practice rules:
58511 Tariff Integrity Board; simplified and expedited procedure for striking tariffs from files
NOTICES
58575 Hearing assignments
Motor carriers:
58582 Fuel costs recovery, expedited procedures
58576 Permanent authority applications
Railroad car service orders; various companies:
58581 Kansas City Terminal Railway Co.

Justice Department
See Parole Commission.

Land Management Bureau
PROPOSED RULES
Oil and gas leasing:
58638 Simultaneous oil and gas redrawing procedures
NOTICES
Coal exploration program:
58547 Wyoming
Outer Continental Shelf:
58548 Oil and gas lease sales; Eastern Gulf of Alaska

Legal Services Corporation
NOTICES
58549 Expansion into areas previously unserved by LSC-funded programs; interim internal staff directives

National Bureau of Standards
NOTICES
Information processing standards; Federal:
58535 Magnetic tape labels and file structure for information interchange

National Credit Union Administration
RULES
58496 Corporate central Federal credit unions; operations and requirements

National Institute for Occupational Safety and Health
NOTICES
58546 Safe asbestos removal or treatment in schools; demonstration programs; grant applications

National Oceanic and Atmospheric Administration
NOTICES
Meetings:
58534 Pacific Fishery Management Council

National Park Service
NOTICES
Concession permits, etc.:
58549 Rocky Mountain National Park
Meetings:
58548 Ozark National Scenic Riverways Advisory Commission

National Science Foundation
NOTICES
Committees; establishment, renewals, terminations, etc.:
58551 Engineering and Applied Science Advisory Committee
58554 Earthquake studies; prediction and hazard mitigation program; 1980 FY research proposals
58554 Handicapped in science program; proposal submission procedure
Meetings:
58551-58554 Behavioral and Neural Sciences Advisory Committee (5 documents)
58552 Mathematical and Computer Sciences Advisory Committee
58553 Physiology, Cellular and Molecular Biology Advisory Committee (2 documents)
58553, 58554 Social and Economic Science Advisory Committee (2 documents)

Nuclear Regulatory Commission
NOTICES
Applications, etc.:
58555 Cincinnati Gas & Electric Co. et al.
58555 Commonwealth Edison Co.
58555 Florida Power & Light Co.
58556 Georgia Power Co. et al.
58556 Houston Lighting & Power Co.
58556 Maine Yankee Atomic Power Co.
58557 Pennsylvania Power & Light Co. et al.
58557 Puget Sound Power & Light Co. et al
58557 Southern California Edison Co. et al.
58558 Texas Utilities Generating Co.
58559 Policy and Procedure; interim statement

Parole Commission
RULES
Prisoners, youth offenders, and juvenile delinquents; parole, release, etc.:
58507 National Appeals Board; voting procedures; interim rule
PROPOSED RULES
Federal prisoners; paroling, recommitting and supervising:
58528 National Appeals Board; voting procedures; cross reference

Pennsylvania Avenue Development Corporation
PROPOSED RULES
58528 Relocation of businesses and residents within Pennsylvania Avenue Development Area; policy and procedures; advance notice

Postal Service
RULES
Domestic Mail Manual:
58509 Enclosures in controlled circulation publications

Securities and Exchange Commission
RULES
58502 Investment companies:
Liability insurance policies; joint purchases, exemption
PROPOSED RULES
58521 Investment companies, registered; mergers and consolidations; exemptions
NOTICES
Hearings, etc.:
58566 Allegheny Power System, Inc.
58559 American International Pictures, Inc.
58567 Combined Communications Corp.
58567 Consolidated Natural Gas Co. et al.
58569 F-B Truck Line Co.
58569 Fundpack, Inc. Holding Trust et al.
58570 Indiana Group, Inc.
58571 IPI-Income and Price Index Fund et al.
58574 MWA Co.
Self-regulatory organizations; proposed rule changes:
58560 Empire Fire & Marine Insurance Co.
58560 First Income Shares, Inc.
58561 Houdaille Industries, Inc.
58561 Margo's La Mode, Inc.
58561 Middle South Utilities, Inc.
58562 Money Market Trust
58574 Pacific Stock Exchange, Inc.
58563 Scandinavian Bank Ltd.
58565 Smith, Barney Equity Fund, Inc.
58566 Welltech, Inc.

State Department
NOTICES
Meetings:
58574 International Telegraph and Telephone Consultative Committee

Surface Mining Reclamation and Enforcement Office
NOTICES
Meetings:
58549 Mining and Mineral Resources Advisory Committee; cancellation

Textile Agreements Implementation Committee
NOTICES
Man-made textiles:
58537 India
58538 Mexico

Treasury Department
See also Customs Service.
NOTICES
Notes, Treasury:
58575 X-1981 series

Veterans Administration
RULES
Loan guaranty:
58508 Mobile home; increase in interest rate

MEETINGS ANNOUNCED IN THIS ISSUE

COMMERCE DEPARTMENT
National Oceanic and Atmospheric Administration—
58534 Pacific Fishery Management Council, Scientific and Statistical Committee, 11-6 through 11-8-79

ENERGY DEPARTMENT
Economic Regulatory Administration—
58583 Fuel Oil Marketing Advisory Committee, Forum on refiner credit practices, 10-29-79

HEALTH, EDUCATION, AND WELFARE DEPARTMENT
Office of the Secretary—
58545 Advisory Panel on Financing Elementary and Secondary Education, 10-26 and 10-27-79

INTERIOR DEPARTMENT
National Park Service—
58548 Ozark National Scenic Riverways Advisory Commission, 10-26-79

NATIONAL ALCOHOL FUELS COMMISSION
58550 Meeting, 10-22 and 10-23-79

NATIONAL SCIENCE FOUNDATION
58551 Advisory Committee for Behavorial and Neural Sciences, Subcommittee on Linguistics, 10-25 and 10-26-79
58552 Advisory Committee for Behavioral and Neural Sciences, Subcommittee on Memory and Cognitive Processes, 10-22 through 10-24-79
58552 Advisory Committee for Behavioral and Neural Sciences, Subcommittee on Neurobiology, 10-22, 10-23, and 10-24-79
58552 Advisory Committee for Behavioral and Neural Sciences, Subcommittee on Psychobiology, 10-22 and 10-23-79
58554 Advisory Committee for Behavioral and Neural Sciences, Subcommittee on Social and Developmental Psychology, 10-25 and 10-26-79
58552 Advisory Committee for Mathematical and Computer Sciences, Subcommittee for Computer Science, 10-24, 10-25, and 10-26-79
58553 Advisory Committee for Physiology, Cellular and Molecular Biology, Subcommittee on Regulatory Biology, 10-24, 10-25, and 10-26-79
58553 Advisory Committee for Physiology, Cellular and Molecular Biology, Subcommittee on Molecular Biology, Group A, 10-22, and 10-23-79
58554 Advisory Committee for Social and Economic Science, Subcommittee on History and Philosophy, 10-26, and 10-27-79
58553 Advisory Committee for Social and Economic Science, Subcommittee for Sociology, 10-25, and 10-26-79

STATE DEPARTMENT
58574 U.S. Organization for the International Telegraph and Telephone Consultative Committee, Study Group 1, 10-31-79

HEARINGS

DELAWARE RIVER BASIN COMMISSION
58539 Hearing, 10-16-79

ENVIRONMENTAL PROTECTION AGENCY
58540 California State motor vehicle pollution control standards, 10-24 and 10-25-79

INTERIOR DEPARTMENT
Land Management Bureau—
58548 Proposed Outer Continental Shelf oil and gas lease Sale No. 55 of the eastern Gulf of Alaska, 10-24 and 10-26-79

CFR PARTS AFFECTED IN THIS ISSUE

A cumulative list of the parts affected this month can be found in the Reader Aids section at the end of this issue.

3 CFR
Proclamations:
4695 58493

7 CFR
2 58495
932 58495

12 CFR
704 58496

14 CFR
207 58499
208 58499
212 58500
214 58500
241 58500

16 CFR
Proposed Rules:
13 (2 documents) 58516, 58518

17 CFR
270 58521
Proposed Rules:
270 58502

19 CFR
Proposed Rules:
134 58527

24 CFR
Ch. XIII 58507
240 58503
403 58503
510 58506
Proposed Rules:
203 58527
888 58528

28 CFR
2 58507
Proposed Rules:
2 58528

36 CFR
Proposed Rules:
Ch. IX 58528

38 CFR
36 58508

39 CFR
111 58509

40 CFR
Proposed Rules:
60 58602
61 (2 documents) 58642, 58661

43 CFR
Proposed Rules:
3100 58638

45 CFR
80 58509

49 CFR
1011 58511
1100 58511

Federal Register
Vol. 44, No. 197
Wednesday, October 10, 1979

Presidential Documents

Title 3—

The President

Proclamation 4695 of October 6, 1979

National Port Week, 1979

By the President of the United States of America

A Proclamation

Virtually every major metropolitan region of the United States centers around a port, or is closely linked by rail or highway to a port. As waterborne trade in the United States approaches 2 billion tons of cargo per year, the rippling economic effects of expanding port activities will continue to generate employment, revenues, and community development.

Local control and administration of our Nation's port system has fostered the development of some 170 commercial seaports and numerous inland ports on our navigable inland waterways. As the world's leading trading country, the United States depends upon local port expenditures, modernizations and expansions to accommodate expected growth in trade and improvements in transportation technology. But the benefits extend to the national economy, as well as to local communities.

Since 1946, local port agencies have invested more than $5 billion to construct and modernize our pier and wharf facilities. These local public expenditures have essentially been matched by the investments of private marine terminal owners, while the Federal Government helps provide channel and navigation improvements. For the years 1973–1978, these local port expenditures reached $1.8 billion. Projections for the next five years total an estimated $3 billion. These local investments are the vital streams of our foreign and domestic waterborne commerce.

NOW, THEREFORE, I, JIMMY CARTER, President of the United States of America, in order to remind Americans of the importance of the port industry of the United States to our national life, do hereby designate the seven calendar days beginning October 7, 1979, as National Port Week. I invite the Governors of the several States, the chief officials of local governments, and the people of the United States to observe such week with appropriate ceremonies and activities.

IN WITNESS WHEREOF, I have hereunto set my hand this sixth day of October, in the year of our Lord nineteen hundred seventy-nine, and of the Independence of the United States of America the two hundred and fourth.

Jimmy Carter

[FR Doc. 79-31476
Filed 10-9-79; 10:39 am]
Billing code 3195-01-M

Rules and Regulations

Federal Register
Vol. 44, No. 197
Wednesday, October 10, 1979

This section of the FEDERAL REGISTER contains regulatory documents having general applicability and legal effect, most of which are keyed to and codified in the Code of Federal Regulations, which is published under 50 titles pursuant to 44 U.S.C. 1510.
The Code of Federal Regulations is sold by the Superintendent of Documents. Prices of new books are listed in the first FEDERAL REGISTER issue of each month.

DEPARTMENT OF AGRICULTURE

Office of the Secretary

7 CFR Part 2

Amendment to Delegations of Authority by the Secretary of Agriculture and General Officers of the Department

AGENCY: Department of Agriculture.

ACTION: Final rule.

SUMMARY: This rule adds new delegations of authority from the Secretary of Agriculture and General Officers of the Department to reflect the assignment of responsibilities under the Agricultural Foreign Investment Disclosure Act of 1978.

EFFECTIVE DATE: October 10, 1979.

FOR FURTHER INFORMATION CONTACT: Walter C. Ferguson, Confidential Assistant to the Administrator, Agricultural Stabilization and Conservation Service, U.S. Department of Agriculture, Washington, D.C. 20250, 202-447-8165

SUPPLEMENTARY INFORMATION: Since the rule involves agency management, good cause is found that the prior notice, public rulemaking procedure, and effective date requirements of 5 U.S.C. 553 are impractical and contrary to the public interest, and that the requirements of Executive Order 12044 are inapplicable.

Accordingly, Part 2, Subtitle A, Title 7 Code of Federal Regulations is amended as follows:

Subpart C—Delegations of Authority to the Deputy Secretary, Under Secretary for International Affairs and Commodity Programs, Assistant Secretaries, the Director of Economics, Policy Analysis and Budget, and the Director, Office of Governmental and Public Affairs

1. Section 2.21 is amended by adding a new paragraph (b)(34) to read as follows:

§ 2.21 Delegations of authority to the Under Secretary for International Affairs and Commodity Programs.

* * * * *

(b) *Related to agricultural stabilization and conservation.* * * *

(34) Administer the Agriculture Foreign Investment Disclosure Act of 1978 (7 U.S.C. 3501 *et seq.*) except those functions delegated in § 2.27(b)(15).

* * * * *

2. Section 2.27 is amended by adding a new paragraph (b)(15) to read as follows:

§ 2.27 Delegations of authority to the Director of Economics, Policy Analysis and Budget.

* * * * *

(b) *Related to farmer cooperatives, economics research, and statistical reporting.* * * *

(15) Prepare for transmittal by the Secretary to the President and both Houses of Congress, an analytical report under section 5 of the Agricultural Foreign Investment Disclosure Act of 1978 (7 U.S.C. 3504) concerning the effect on family farms and rural communities of holdings, acquisitions, and transfers of U.S. agricultural land by foreign persons.

* * * * *

Subpart H—Delegations of Authority by the Under Secretary for International Affairs and Commodity Programs

3. Section 2.65 is amended by adding a new paragraph (a)(34) to read as follows:

§ 2.65 Administrator, Agricultural Stabilization and Conservation Service.

(a) *Delegations.* * * *

(34) Administer the Agricultural Foreign Investment Disclosure Act of 1978 (7 U.S.C. 3501 *et seq.*) except those functions delegated in § 2.85(a)(15).

* * * * *

Subpart K—Delegations of Authority by the Director of Economics, Policy Analysis and Budget

4. Section 2.85 is amended by adding a new paragraph (a)(15) to read as follows:

§ 2.85 Administrator, Economics, Statistics, and Cooperative Service.

(a) *Delegations.* * * *

(15) Prepare for transmittal by the Secretary to the President and both Houses of Congress, an analytical report under section 5 of the Agricultural Foreign Investment Disclosure Act of 1978 (7 U.S.C. 3504) concerning the effect of family farms and rural communities of holdings, acquisitions, and transfers of U.S. agricultural land by foreign persons.

(5 U.S.C. 301 and Reorganization Plan No. 2 of 1953)

For Subpart C:

Dated: October 2, 1979.

Jim Williams,

Acting Secretary.

For Subpart H:

Dated: October 2, 1979.

Dale E. Hathaway,

Under Secretary for International Affairs and Commodity Programs.

For Subpart K:

Dated: October 2, 1979.

Howard W. Hjort,

Director of Economics, Policy Analysis and Budget.

[FR Doc. 79-31275 Filed 10-9-79; 8:45 am]
BILLING CODE 3410-01-M

Agricultural Marketing Service

7 CFR Part 932

Grade and Size Requirements for Certain Olives

AGENCY: Agricultural Marketing Service, USDA.

ACTION: Final rule.

SUMMARY: This rule approves grade and size requirements for processed olives which are used in the production of limited use style olives (i.e. halved, quartered, segmented, sliced, chopped, or minced canned ripe olives). This action permits use of those olives of sizes too small to be desirable for use as whole or pitted ripe olives to be utilized in production of other styles of olives,

thereby benefiting olive users and producers.

EFFECTIVE DATE: September 1, 1979, through August 31, 1980.

FOR FURTHER INFORMATION CONTACT: Malvin E. McGaha, (202) 447-5975.

SUPPLEMENTARY INFORMATION: This regulation is issued under the marketing agreement, as amended, and Order No. 932, as amended (7 CFR Part 932), hereinafter referred to collectively as the "order." The order is effective under the Agricultural Marketing Agreement Act of 1937, as amended (7 U.S.C. 601-674), hereinafter referred to as the "Act." The regulation was recommended by the Olive Administrative Committee, which is established under the order as the agency to administer its terms.

Section 932.52 (a)(2) and (a)(3) of the order specify the minimum sizes of processed olives (by variety) that may be used in the production of whole and pitted styles of canned ripe olives. The minimum sizes are expressed in terms of minimum weights for individual olives. Section 932.52(a)(3) also provides that use of processed olives smaller than the sizes prescribed for whole and pitted style may be established annually for limited use and that each such minimum size may also include a size tolerance as recommended by the committee and approved by the Secretary. Any such tolerances may also be recommended and approved annually. Therefore, this action approves establishment, for olives from the 1979-80 crop, of minimum sizes contained in § 932.52(a)(3) and includes a size tolerance of 25 percent for undersize Variety Group 1 olives and 20 percent for undersize Variety 2 olives. These requirements are the same as have been established each fiscal year since 1971.

This regulation reflects the committee's appraisal of the 1979-80 olive crop and marketing conditions and is its recommendation for the minimum grade and sizes of olives that will provide good quality fruit of the styles specified, in the interest of consumers and producers.

It is found that amendment of Subpart—Rules and Regulations (7 CFR 932.108-932.161) by amending § 932.153 which contains grade and size requirements and tolerances for processed olives for limited use, is in accordance with the order and will tend to effectuate the declared policy of the act. Therefore, such amendment, as hereinafter set forth, is approved.

It is further found that it is impracticable, unnecessary, and contrary to the public interest to give preliminary notice, engage in public rulemaking procedure and postpone the effective date of this amendment until 30 days after publication in the Federal Register (5 U.S.C. 553), and good cause exists for making the provisions hereof effective at the time hereinafter set forth, in that (1) the time intervening between the date when the information upon which this amendment is based became available and the time such amendment must become effective in order to effectuate the declared policy of the act is insufficient; (2) the handling of the 1979 crop of olives is expected to begin about the effective time hereof; (3) compliance with the amended rules and regulations will require of handlers no special preparation which cannot be completed by the effective time hereof; and (4) this amendment relaxes restrictions on the handling of olives.

In accordance with procedures in Executive Order 12044, the emergency nature of this regulation warrants publication without opportunity for further public comment. The regulation has not been classified significant under USDA criteria for implementing the Executive Order. An Impact Analysis is available from Malvin E. McGaha, 202-447-5975.

Therefore, § 932.153 of Subpart—Rules and Regulations (7 CFR 932.108-932.161) is amended to read as follows:

§ 932.153 Establishment of grade and size requirements for processed 1979-80 olives for limited use.

(a) *Grade.* On and after September 1, 1979, any handler may use processed olives of the respective variety groups in the production of limited use styles of canned ripe olives if such olives were processed after August 31, 1979, and meet the grade requirements specified in § 932.52(a)(1) as modified by § 932.149.

(b) *Sizes.* On and after September 1, 1979, any handler may use processed olives in the production of limited use styles of canned ripe olives if such olives were processed during the period September 1, 1979, through August 31, 1980, and meet the following requirements:

(1) The processed olives shall be identified and kept separate and apart from any olives processed before September 1, 1979, or after August 31, 1980;

(2) Variety Group 1 olives, except the Ascolano, Barouni, or St. Agostino varieties, shall be of a size which individually weigh 1/90 pound: *Provided,* That not to exceed 25 percent of the olives in any lot or sublot may be smaller than 1/90 pound;

(3) Variety Group 1 olives of the Ascolano, Barouni, or St. Agostino varieties shall be of a size which individually weigh 1/140 pound: *Provided,* That not to exceed 25 percent of the olives in any lot or sublot may be smaller than 1/140 pound;

(4) Variety Group 2 olives, except the Obliza variety, shall be of a size which individually weigh 1/180 pound: *Provided,* That not to exceed 20 percent of the olives in any lot or sublot may be smaller than 1/180 pound;

(5) Variety Group 2 olives of the Obliza variety shall be of a size which individually weigh 1/140 pound: *Provided,* That not to exceed 20 percent of the olives in any lot or sublot may be smaller than 1/140 pound.

(Secs. 1-19, 48 Stat. 31, as amended (7 U.S.C. 601-674).)

Dated: October 4, 1979.

D. S. Kuryloski,

Deputy Director, Fruit and Vegetable Division, Agricultural Marketing Service.

[FR Doc. 79-31294 Filed 10-9-79; 8:45 am]

BILLING CODE 3410-02-M

NATIONAL CREDIT UNION ADMINISTRATION

12 CFR Part 704

Corporate Central Federal Credit Union; Operations and Requirements

AGENCY: National Credit Union Administration.

ACTION: Final rule.

SUMMARY: This Part contains those regulations governing the operations of and requirements for corporate central Federal credit unions where such operations and requirements differ from those of natural person credit unions. Corporate central credit unions are credit unions chartered to serve primarily other credit unions.

Corporate central credit unions need greater flexibility in their capital structure to meet their members' needs. This change permits corporate central Federal credit unions to offer to member credit unions, daily balance share accounts not subject to the rate restrictions of § 701.35(g) (12 CFR 701.35(g)) of this Chapter.

The Administration's experience with corporate central credit unions indicates a need for more specific guidance in the area of management and a need to strengthen the audit function. This change requires written policies and audits by qualified independent auditors.

This rule also provides for representation of member credit unions on the boards of directors and on the committees of the corporate central Federal credit unions by allowing

appointed representatives of member credit unions to serve on their behalf.

EFFECTIVE DATE: November 10, 1979.

ADDRESS: National Credit Union Administration, 2025 M Street, NW., Washington, DC 20456.

FOR FURTHER INFORMATION CONTACT: Mike Fischer, Chief Accountant, Office of Examination and Insurance, Telephone (202) 254-8760.

SUPPLEMENTARY INFORMATION:

Background

On July 30, 1979, the National Credit Union Administration (Administration) issued a proposed rule, "Corporate Central Federal Credit Union" (12 CFR Part 704, published at 44 FR 44544). The proposed rule set forth regulations governing the operations of and the requirements for corporate central Federal credit unions where such operations and requirements differ from those of natural person credit unions. Public comment was invited to be received on or before August 29, 1979. Nine comment letters were received during the comment period and all comments have been considered in arriving at the final rule.

Analysis of Comments and Changes

1. *Section 704.1—Definitions.* Two commenters suggested that the corporate activity test used in this rule should be consistent with the corporate activity test used in the Central Liquidity Facility (Facility) regulations. The corporate activity tests in these two regulations are for different entities. In this rule the test is for qualification as a Federal corporate central credit union while in the Facility regulations, the test is for qualification as an agent member of the Facility. The qualification standard in the Facility regulations was made less restrictive to accommodate state-chartered centrals to the extent permitted by the "primarily serving other credit unions" clause in the law which created the Facility. The composition of state-chartered centrals is not at issue in this rule and the original language has been retained.

2. *Section 704.2—Corporate Central Reserve.* Two commenters pointed out that the language in section 116 of the Federal Credit Union Act (12 U.S.C. 1762) uses the term "gross income" rather than "gross earnings." The language in subsection (b) has been revised to conform with the language in the Federal Credit Union Act.

Two commenters indicated that the wording of § 704.2(b) requiring the determination of gross earnings (income) immediately before the payment of each dividend (so that the required reserve transfer can be determined) created a problem with their data processing system. The system these commenters used apparently computed gross earnings (income) at the same time that it distributed dividends. They suggested the wording "[i]mmediately before the payment of each dividend * * *" be replaced by "[a]t the end of the dividend period * * *" The original wording has been retained to emphasize the fact that the reserve transfers must be met before the payment of any dividends. Where a credit union's data system does not supply this data (gross income) prior to distribution of dividends, management must (through projections) ensure that sufficient earnings are available to pay expenses, meet required reserves, and pay the desired dividend rate. The present wording does not prohibit a credit union from simultaneously posting its general ledger gross and net income accounts and dividends to shareholders, provided, the officials have assured themselves that sufficient earnings are available.

3. *Section 704.3—Management.* Six commenters addressed the issue of member credit union representatives on the board of directors and the committees.

Two of these commenters objected to such representation because it may cause the demise of the integration and cooperation between the leagues and the corporate centrals and might lead to domination of corporate centrals by special interest groups. Although this disintegration may occur, it is not the inevitable result of permitting member credit unions to be represented on the board and the committees. The Administration believes that every member, whether natural person or corporate entity, has the right to representation. Seemingly, this provision would not foster the domination of corporate centrals by special interest groups; rather, by broadening the base of participation in the electoral process, it should ensure consideration of the interests of the majority of the members in the corporate central credit unions.

Four commenters suggested that since it is people who serve on the board and committees, the representatives of the member credit unions should be appointed prior to any elections. Knowing the representative in advance would permit the members to assess the individuals personal qualifications and fitness to represent their views. The Administration agrees that such prior knowledge is beneficial and the recommended changes to accomplish this have been made in § 704.3.

Two commenters suggested that this section of the regulation be expanded to clarify how a vacancy on the board or committees would be filled should the designated representative of a member credit union be unable or unwilling to complete the term to which elected or appointed. These commenters suggested that any vacancy so created should be filled by action of the board of directors. The Administration agrees with this position. The method of filling vacancies on the board and on the committees is covered by Section 3 of Article VII of the Federal Credit Union Bylaws (Bylaws). The provisions of the Bylaws apply to all vacancies which occur, regardless of whether the vacant position was previously held by a natural person member or by a representative of a member credit union.

Two commenters requested that in the final regulation the Administration should clarify whether the offices of secretary and treasurer may be held by the same person as is permitted in Section 112 of the Federal Credit Union Act (12 U.S.C. 1761a). All provisions of Section 112 of the Federal Credit Union Act (12 U.S.C. 1761a) apply to corporate central Federal credit unions even though its provisions are not repeated in this rule. The positions of secretary and treasurer in a corporate central Federal credit union may be held by the same person just as in any other Federal credit union.

Two commenters questioned the need for specific regulation in the area of management policies; suggesting that mandating certain actions of the board of directors is "external" management. The Administration believes that the requirements to establish written management policies and to institute a budgetary process which addresses the areas of cash flow and funds management are essential for successful operation of a corporate central. Since the Administration's experience with corporate central credit unions has shown that written management policies and budgetary systems are in many cases minimal or non-existent, this requirement of the regulation has been retained in its original form.

4. *Section 704.4—Annual Audit.* Although most commenters were supportive of the requirement that audits of corporate centrals be performed by licensed independent auditors, one commenter objected to this requirement on the basis that if the supervisory committee cannot perform the audit then the supervisory committee should be eliminated from corporate centrals. The Administration believes that because of the complexity

of corporate central operations, a high level of technical expertise is required on the part of the auditor. The licensing processes of the various States and territories are designed to ensure that the licensee possesses the requisite knowledge and skills to perform audits. The fact that the audit must be performed by an independent licensed auditor does not negate the need for the supervisory committee. The committee is still responsible to see that the audit is performed. In addition the supervisory committee has responsibility in the areas of: suspension of officers, committee members and directors; convening of special members' meetings; verification of members' accounts; and, reporting to members.

Four commenters stated that the requirement to submit a copy of the audit report to the Administration within 14 days of receipt did not allow, the credit union sufficient time to react and respond to the audit report. They suggested that 30 days be allowed between receipt of the report and furnishing a copy to the Administration. This change has been adopted.

5. *Section 704.5—Daily Balance Share Account.* There was unanimous support for the daily balance share account free of the dividend rate restrictions of § 701.35(g) (12 CFR 701.35(g)). Commenters indicated this change would better enable them to compete for the short-term funds of their members.

6. *Other Comments.* Several commenters suggested that other changes should be included in this rule. These suggested changes included: relief from the interest rate ceiling; relief from all dividend rate ceilings and notice, disclosure, and advertising requirements; and, relief from the monthly board meeting requirement. These suggested changes would represent a significant departure from the proposed rule and would, therefore, require exposure for comment. Some of these suggested changes may be addressed in subsequent proposed rules.

Accordingly, Part 704 is amended to read as set forth below.

Rosemary Brady,
Secretary to the NCUA Board.
October 4, 1979.

PART 704—CORPORATE CENTRAL FEDERAL CREDIT UNIONS

Sec.
704.0 Scope.
704.1 Definitions.
704.2 Corporate Central Reserve.
704.3 Management.
704.4 Annual audit.
704.5 Daily balance share account.

Authority: Sec. 111, 94 Stat. 1015 (12 U.S.C. 1761); Sec. 116, 84 Stat. 1017 (12 U.S.C. 1762); Sec. 120, 73 Stat. 635 (12 U.S.C. 1766) and Sec. 209, 84 Stat. 1104 (12 U.S.C. 1789).

PART 704—CORPORATE CENTRAL FEDERAL CREDIT UNIONS

§ 704.0 Scope.

(a) This Part contains those regulations governing the operations of and requirements for Corporate Central Federal Credit Unions where such operations and requirements differ from those of natural person Federal credit unions.

(b) Part 702 of this Chapter sets forth the reserving requirements for Federal credit unions. As concerns corporate central Federal credit unions, this Part modifies the existing regular reserve structure by eliminating from outstanding loans and risk assets, when computing the amount that must be maintained in the regular reserve loans to member credit unions (loans to other credit unions are presently excepted from risk assets by § 700.1(j)(4)), and by creating a corporate central reserve.

(c) The regulation sets out procedures for representation on the board of directors and credit committee of corporate central Federal credit unions and for the establishment of written management policies. In addition, annual audit requirements are described and a daily balance share account for member credit unions is established which is not subject to the rate restrictions specified in § 701.35(g).

§ 704.1 Definitions.

(a) "Corporate central Federal credit union" means a Federal credit union operated for the primary purpose of serving corporate accounts. A Federal credit union will be deemed to be a corporate central Federal credit union when its total dollar amount of outstanding corporate loans plus corporate shareholdings is equal to, or in excess of, 75 per centum of its total outstanding loans plus shareholdings.

(b) "Natural person Federal credit union" means any Federal credit union which is not a corporate central Federal credit union.

(c) "Risk assets" of a corporate central Federal credit union shall be as defined in § 700.1 of this Chapter, except, however, loans made under authority of Sections 107(5) and 107(7) of the Act by a corporate central Federal credit union to credit unions shall not be considered risk assets.

(d) "Management policies" means policies relating to the general conduct of a credit union's operations including but not limited to policies related to membership, lending, investing, borrowing, safeguarding of assets, hiring, training, and supervision of employees.

§ 704.2 Corporate Central Reserve.

(a) In addition to the Regular Reserve required by § 702.2 of this Chapter, a corporate central Federal credit union shall establish and maintain a Corporate Central Reserve as described in this Section.

(b) Immediately before the payment of each dividend, the treasurer shall determine the gross income of the corporate central Federal credit union. From this amount there shall be transferred to a reserve to be known as the Corporate Central Reserve, as of the end of each dividend period, 2 per centum of gross income until the Corporate Central Reserve shall equal 1½ per centum of the corporate central Federal credit union's total assets.

(c) Whenever the Corporate Central Reserve falls below 1½ per centum of total assets it shall be replenished by regular transfers of 2 per centum of gross income or by contributions in such amounts as may be needed to maintain the Corporate Central Reserve at 1½ per centum of total assets, whichever is less.

(d) Charges may be made against the Corporate Central Reserve to the same extent and in the same manner as those permitted to be made against the Regular Reserve pursuant to § 702.2 of this Chapter. No other charges shall be made against the Corporate Central Reserve except as may be authorized in writing by the Board or its designee.

§ 704.3 Management.

(a) A member credit union of a corporate central Federal credit union may appoint a representative to the corporate central Federal credit union. This representative shall be empowered to attend meetings, vote, and stand for election on behalf of the member credit union. The business affairs of the corporate central Federal credit union shall be managed by:

(1) A board of not less than five directors elected by and from the members and appointed representatives of member credit unions;

(2) A credit committee of not less than three members elected by and from the members and appointed representatives of member credit unions; and,

(3) A supervisory committee of not less than three members nor more than five members, one of whom may be a director other than the treasurer, to be appointed by the board. Designated representatives of member credit unions may be appointed to the supervisory committee.

(b) At their first meeting after their election, the directors shall elect from

their number, a president, one or more vice presidents, a secretary, and a treasurer, who shall be the executive officers of the corporation.

(c) *Management Policies.* (1) The board of directors shall adopt and approve written policies that shall be reviewed at least annually.

(2) In establishing the management policies the board shall adopt such policies that will foster efficient operations in conformance with sound business practice both in the corporate central Federal credit union and among its members.

(d) The board of directors shall institute a budgetary process which addresses the areas of income and expenses, cash flow, and the sources and uses of funds and shall assess actual performance against such budgets at least quarterly.

§ 704.4 Annual audit.

(a) The supervisory committee shall cause an annual audit to be made by an independent, duly licensed, auditor and shall submit the audit report to the board of directors. A summary of the audit report shall be submitted to the membership at the next annual meeting.

(b) A copy of the audit report shall be submitted to the appropriate regional office of the National Credit Union Administration within 30 days after receipt by the board of directors.

§ 704.5 Daily balance share account.

Notwithstanding the requirements of § 701.35 of this Chapter, a corporate central Federal credit union may make available to its member credit unions a daily balance share account subject to the following terms and conditions:

(a) The dividend period for such accounts shall be daily.

(b) The board of directors, after determining through projections that adequate earnings are available, may declare dividends no more frequently than daily and no less frequently than monthly.

(c) The dividend rate on such accounts shall *not* be subject to the rate restrictions of § 701.35(g) of this Chapter.

(d) The board of directors may establish such additional terms and conditions concerning the issuance and maintenance of such accounts in conformance with the requirements of this Section and § 701.35.

[FR Doc. 79-31293 Filed 10-9-79; 8:45 am]

BILLING CODE 7535-01-M

CIVIL AERONAUTICS BOARD

14 CFR Part 207

[Reg. ER-1154; Amdt. No 22]

Charter Trips and Special Services; Overseas Military Personnel Charters

Adopted by the Civil Aeronautics Board at its office in Washington, D.C., October 4, 1979.

AGENCY: Civil Aeronautics Board.

ACTION: Final rule.

SUMMARY: The CAB is reducing the minimum charter size requirement for Overseas Military Personnel Charters from 40 to 20 persons, the same as for Public Charters. This will increase flexibility in arranging split charters. The change is being made in response to a request by Davis Agency.

DATES: Adopted: October 4, 1979. Effective: October 10, 1979.

FOR FURTHER INFORMATION CONTACT: Mark Frisbie, Office of the General Counsel, Civil Aeronautics Board, 1825 Connecticut Avenue, NW., Washington, D.C. 20428, 202-673-5442.

SUPPLEMENTARY INFORMATION: In EDR-381, 44 FR 31199, May 31, 1979, the Board proposed to reduce the minimum contract size for Overseas Military Personnel Charters (OMPC's) from 40 to 20 persons. This change was suggested to make the OMPC minimum contract size the same as that for Public Charters, allowing comparable flexibility for split charters, and to make permanent authority that has been granted by waiver. Comments were received only from Davis Agency and Lufthansa, and both supported the proposal.

OMPC's are the only type of charter organized and marketed by a charter operator middleman for which a minimum contract size of 40 is still required. When OMPC's were first authorized in 1972, all charter types were restricted to a minimum size of 40. Since then, the Board has reduced the minimum for other charter forms (now subsumed under the Public Charter rules) as part of more comprehensive rule changes. The OMPC rules, which serve a particularized purpose and are not available to the general public, were not included in the earlier rulemakings. A similar reduction for charters sold to affinity organizations or to persons or organizations for their own use has been proposed in EDR-382 (44 FR 36065, June 20, 1979). The final rule reflects the changes in paragraph numbering adopted in ER-1145, 1146, and 1147 (44 FR 50591, August 29, 1979).

We see no reason why OMPC's should not have the same minimum charter size as other types of charters. The minimum size affects the ease with which charters can be organized or coordinated with other charters. The rule will not complicate our charter regulations and would not open OMPC's to a broader class of participants or extend their range of operations. It will allow the same organizational flexibility for OMPC's that is permitted for other charter operations. Therefore, we conclude that the minimum contract size reduction is in the public interest.

Since the rule relieves a restriction, and imposes no additional burdens, it is found for good cause that an immediate effective date is in the public interest.

Accordingly, the Civil Aeronautics Board amends 14 CFR 207.11(b)(1) to read:

§ 207.11 Charter flight limitations.

* * * * *

(b)(1) Each person engaging less than the entire capacity of the aircraft for the movement of persons and their personal baggage pursuant to paragraph (a)(3)(iii) or (a)(3)(iv) of this section shall contract and pay for 20 or more seats. Each person engaging less than the entire capacity of an aircraft for the movement of persons and their personal baggage pursuant to paragraph (a)(3)(i) or (a)(3)(ii) of this section shall contract and pay for 40 or more seats, except that if the main deck capacity of an aircraft having 80 or fewer seats is engaged by no more than two persons described in paragraph (a)(3) of this section for the movement of persons and their baggage, then either one of such persons may contract and pay for a minimum of 20 seats.

* * * * *

(Secs. 102, 204, 401 of the Federal Aviation Act of 1958, as amended, 92 Stat. 1706, 72 Stat. 743, 92 Stat. 1710 (49 U.S.C. 1302, 1324, 1371).)

By the Civil Aeronautics Board.

Phyllis T. Kaylor,

Secretary.

[FR Doc. 79-31260 Filed 10-9-79; 8:45 am]

BILLING CODE 6320-01-M

14 CFR Part 208

[Reg. ER-1155; Amdt. No. 22]

Charter Air Transportation; Overseas Military Personnel Charters

Adopted by the Civil Aeronautics Board at its office in Washington, D.C., October 4, 1979.

AGENCY: Civil Aeronautics Board.

ACTION: Final rule.

SUMMARY: The CAB is reducing the minimum charter size requirement for Overseas Military Personnel Charters from 40 to 20 persons, the same as for Public Charters. This will increase flexibility in arranging split charters. The change is being made in response to a request by Davis Agency.

DATES: Adopted: October 4, 1979. Effective: October 10, 1979.

FOR FURTHER INFORMATION CONTACT: Mark Frisbie, Office of the General Counsel, Civil Aeronautics Board, 1825 Connecticut Avenue, NW., Washington, D.C. 20428, 202-673-5442.

For the reasons stated in ER-1154, issued simultaneously, the Civil Aeronautics Board amends 14 CFR 208.6(b)(1) to read:

§ 208.6 Charter flight limitations.

* * * * *

(b)(1) Each person engaging less than the entire capacity of an aircraft for the movement of persons and their personal baggage pursuant to paragraph (a)(3)(iii) or (a)(3)(iv) of this section shall contract and pay for 20 or more seats. Each person engaging less than the entire capacity of an aircraft for the movement of persons and their personal baggage pursuant to paragraph (a)(3)(i) or (a)(3)(ii) of this section shall contract and pay for 40 or more seats, except that if the main deck capacity of an aircraft having 80 or fewer seats is engaged by no more than two persons described in paragraph (a)(3) of this section for the movement of persons and their baggage, then either one of such persons may contract and pay for a minimum of 20 seats.

* * * * *

(Secs. 102, 204, 401 of the Federal Aviation Act of 1958, as amended, 92 Stat. 1706, 72 Stat. 743, 92 Stat. 1710 (49 U.S.C. 1302, 1324, 1371))

By the Civil Aeronautics Board.

Phyllis T. Kaylor,

Secretary.

[FR Doc. 79-31262 Filed 10-9-79; 8:45 am]

BILLING CODE 6320-01-M

---

14 CFR Part 212

[Reg. ER-1156; Amdt. No. 31]

Charter Trips by Foreign Air Carriers; Overseas Military Personnel Charters

Adopted by the Civil Aeronautics Board at its office in Washington, D.C. October 4, 1979.

AGENCY: Civil Aeronautics Board.

ACTION: Final rule.

SUMMARY: The CAB is reducing the minimum charter size requirement for Overseas Military Personnel Charters from 40 to 20 persons, the same as for Public Charters. This will increase flexibility in arranging split charters. The change is being made in response to a request by Davis Agency.

DATES: Adopted: October 4, 1979. Effective October 10, 1979.

FOR FURTHER INFORMATION CONTACT: Mark Frisbie, Office of the General Counsel, Civil Aeronautics Board, 1825 Connecticut Avenue, N.W., Washington, D.C. 20428, 202-673-5442.

For the reasons stated in ER-1154, issued simultaneously, the Civil Aeronautics Board amends 14 CFR 212.8(b)(1) to read:

§ 212.8 Charter flight limitations.

* * * * *

(b)(1) Each person engaging less than the entire capacity of an aircraft for the movement of persons and their personal baggage pursuant to paragraph (a)(3)(iii) or (a)(3)(iv) of this section shall contract and pay for 20 or more seats. Each person engaging less than the entire capacity of an aircraft for the movement of persons and their personal baggage pursuant to paragraph (a)(3)(i) or (a)(3)(ii) of this section shall contract and pay for 40 or more seats, except that if the main deck capacity of an aircraft having 80 or fewer seats is engaged by no more than two persons described in paragraph (a)(3) of this section for the movement of persons and their baggage, then either one of such persons may contract and pay for a minimum of 20 seats.

* * * * *

(Secs. 102, 204, 401 of the Federal Aviation Act of 1958, as amended, 92 Stat. 1706, 72 Stat. 743, 92 Stat. 1710 (49 U.S.C. 1302, 1324, 1371))

By Civil Aeronautics Board.

Phyllis T. Kaylor,

Secretary.

[FR Doc. 79-31263 Filed 10-9-79; 8:45 am]

BILLING CODE 6320-01-M

---

14 CFR Part 214

[Reg. ER-1157; Amdt. No. 28]

Overseas Military Personnel Charters

Adopted by the Civil Aeronautics Board at its office in Washington, D.C., October 4, 1979.

AGENCY: Civil Aeronautics Board.

ACTION: Final rule.

SUMMARY: The CAB is reducing the minimum charter size requirement for Overseas Military Personnel Charters from 40 to 20 persons, the same as for Public Charters. This will increase flexibility in arranging split charters. The change is being made in response to a request by Davis Agency.

DATES: Adopted: October 4, 1979. Effective: October 10, 1979.

FOR FURTHER INFORMATION CONTACT: Mark Frisbie, Office of the General Counsel, Civil Aeronautics Board, 1825 Connecticut Avenue, N.W., Washington, D.C. 20428, 202-673-5442.

For the reasons stated in ER-1154, issued simultaneously, the Civil Aeronautics Board amends the Proviso to 14 CFR 214.7(b) to read:

§ 214.7 Charter flight limitations.

* * * * *

(b) * * *

Provided, * * *: *And provided further,* That with respect to paragraphs (b)(4) and (b)(8) of this section each person engaging less than the entire capacity of the aircraft shall contract and pay for 20 or more seats. With respect to paragraph (b)(1) and (b)(2) of this section * * *

* * * * *

(Secs. 102, 204, 401 of the Federal Aviation Act of 1958, as amended, 92 Stat. 1706, 72 Stat. 743, 92 Stat. 1710 (49 U.S.C. 1302, 1324, 1371))

By the Civil Aeronautics Board.

Phyllis T. Kaylor,

Secretary.

[FR Doc. 79-31264 Filed 10-9-79; 8:45 am]

BILLING CODE 6320-01-M

[Reg. ER-1153; Amdt. No. 37]

14 CFR Part 241

Uniform System of Accounts and Reports for Certificated Air Carriers; Employment Discrimination; Nonoperating Expenses

Adopted by the Civil Aeronautics Board at its office in Washington, D.C., October 4, 1979.

AGENCY: Civil Aeronautics Board.

ACTION: Final rule.

SUMMARY: The CAB is specifying the types of costs resulting from employment discrimination that must be reported as nonoperating expenses, and therefore may not be included in establishing standard fare levels. The action is in response to a petition for rulemaking from the Aviation Consumer Action Project.

DATES: Effective: November 9, 1979. Adopted: October 4, 1979.

FOR FURTHER INFORMATION CONTACT: David Schaffer, Office of the General Counsel, Civil Aeronautics Board, 1825 Connecticut Avenue, N.W., Washington, D.C. 20428, 202-673-5442.

SUPPLEMENTARY INFORMATION: The Aviation Consumer Action Project

(ACAP) on behalf of several civil rights groups and consumer organizations has filed a petition asking the Board to "ensure compliance with the CAB's previously announced policy of disallowing for ratemaking purposes the costs of a carrier's discriminatory practices." The petitioners asked the Board to adopt a rule establishing separate subaccounts under 14 CFR 241.14 in which carriers would be required to separately list all expenses of their discriminatory employment practices. The rule would require carriers to report as nonoperating expenses each cost they incurred, including fines and penalties, in formulating, implementing, and defending discriminatory employment practices. Back-pay awards, settlements payments, court-awarded or settled attorneys' fees, in-house and outside legal fees, and the proportion of salaries paid to employees for the time they spent formulating, implementing or defending discriminatory practices would all have to be reported as nonoperating expenses.

Nonoperating expenses are those expenses attributable to activities that are not an integral part of providing air transportation. They are not considered by the Board in adjusting the Standard Industry Fare Level (SIFL), the basis for future fare adjustments. The Board already requires that costs associated with discrimination be reported as nonoperating expenses, but ACAP contends that specifying these costs in separate subaccounts would discourage airlines from discriminating against their employees and result in somewhat lower fares for passengers.

The Board, in SPDR-30, 37 FR 15518, August 3, 1972, had considered adopting rules prohibiting discrimination in airline employment entirely. This was rejected in SPDR-30A, 41 FR 34979, August 18, 1976, following the Supreme Court decision in *NAACP* v. *FPC*, 425 U.S. 662 (1976). That case held that an agency's statutory duty to advance the public interest does not constitute a directive to seek to eradicate discrimination and does not afford any basis for prohibiting its regulatees from engaging in discriminatory practices. The Court focused instead on the statutory command that the FPC establish "just and reasonable" rates. 16 U.S.C. 824d(a) and 15 U.S.C. 717c(a). This, the Court stated, imposed a duty on the FPC to prevent its regulatees from charging rates based upon illegal or unnecessary labor costs. An agency should therefore not consider the expenses of its regulatees' discriminatory employment practices in establishing the rates consumers pay. Since the Board's governing statute (section 404(a)(2) of the Federal Aviation Act, 49 U.S.C. 1374) is similar to the FPC's in this respect, costs attributable to a carrier's discriminatory employment practices must be considered nonoperating expenses so that they will not be used in adjusting the SIFL.

The Board responsed to *NAACP* v. *FPC* by issuing, on September 8, 1976, Accounting and Reporting Directive No. 49. The purpose of this directive was to emphasize that the Board agreed that the traveling public should not bear the costs of unlawful discrimination by the carriers. The directive stated that any fines or penalties paid by the carrier as a result of its unlawful discrimination must be reported as a nonoperating expense. Accordingly, "all costs associated with discrimination in airline employment" were to be listed by carriers in 14 CFR 241.14 under Account 89.9, "Other miscellaneous nonoperating debits."

The general languge of Directive No. 49 was clarified in Accounting and Reporting Directive No. 71 issued on August 11, 1978. Some carriers had not been listing costs of settling an employment discrimination suit as nonoperating expenses. Directive No. 71 stated that costs of settlements, including the plaintiff's legal fees if the carrier was required to pay them, should be considered one of the "costs associated with discrimination in airline employment" to be listed in Account 89.9. These costs were to be so reported even if the settlement was made without an admission of wrongdoing by the carrier.

ACAP claims that these two accounting directives have not succeeded in resolving all questions concerning which costs associated with employment discrimination must be reported as nonoperating expenses, and that carriers continue to classify various costs of discriminatory employment practices as operating expenses. They assert that Board accounting and reporting directives have not been specific enough to prevent carriers from interpreting their reporting obligations too narrowly.

We agree with ACAP that more specific descriptions of the costs that must be reported as nonoperating expenses should help to clear up any ambiguities in this area. They also may simplify accountants' tasks and remove a potential area of dispute between the carriers and the Board's auditors. In determining which costs must be excluded from operating costs we are governed by the language of *NAACP* v. *FPC*.

The Supreme Court decided in that case that the FPC's duty under the Power and Gas Acts to establish "just and reasonable" rates (15 U.S.C. 717(c)(a) and 16 U.S.C. 824d(a)) required that it prevent its regulatees from charging rates based on illegal labor costs. Costs associated with employment discrimination are such illegal costs and they must not be considered by the agency in setting rates or fares. The Court did not require that the agency disallow in ratemaking every cost regardless of how tenuous its connection was to the discriminatory practices. Only if the cost was "demonstrably the product of a regulatee's discriminatory employment practice" would an agency be obliged to disallow it. 425 U.S. at 668. For an expense to fall within this standard it must be quantifiable by a judicial or administrative decree or be otherwise identifiable, and it must result from the carrier's discriminatory practice.

Under this standard, any awards of back pay or attorneys' fees would be demonstrably the product of discrimination. Any fines or penalties assessed against a carrier for discriminating would also be nonoperating expenses under the Supreme Court's standard. That would be the case regardless of whether the awards or fines were set by judicial decree or by a settlement. On the other hand, the cost of losing valuable government contracts, the cost of demonstrations or boycotts against the company, and the costs of inefficiency among employees demoralized by barriers to promotions would be too vague and unquantifiable to be included under the *NAACP* v. *FPC* criteria. The fees of outside legal counsel are typically easily identified and connected to specific issues, and should therefore be included as nonoperating expenses where discrimination is proved or where the matter is resolved by a compromise settlement or consent decree. This is not always true of the salaries of in-house counsel and other employees of the carrier. Employee salaries should be reported as nonoperating expenses, however, in all cases where the amounts attributable to discrimination are reasonably identifiable.

Although we are specifying the costs that are demonstrably the product of a carrier's discriminatory practices, as ACAP asked, it does not appear necessary to do this by establishing separate subaccounts. Such accounts will not aid Board auditors in discovering accounting violations.

Requiring separate subaccounts may only serve to increase carriers' accounting costs, which would be operating expenses that could be considered by the Board in adjusting the SIFL. Thus doing so might nullify any savings consumers realize from the allocation of discrimination expenses to nonoperating debits.

We further find that the discrimination costs that have been incurred up to now and reported as operating expenses have not been sufficient to have a significant effect on the SIFL. We therefore do not find sufficient justification to instruct carriers to reclassify any expense incorrectly reported in the past.

The Board reaffirms its accounting policy set forth in the two previous Accounting and Reporting Directives, numbers 49 and 71. We also grant the ACAP petition insofar as it asks us to specify which costs associated with employment discrimination must be reported as nonoperating expenses. In other respects, the petition is denied.

Since this rule is interpretative in nature and requires no more of air carriers than was already mandated by *NAACP* v. *FPC* and Accounting and Reporting Directive No. 49, the Board finds that notice and public procedure are unnecessary.

Accordingly, the Civil Aeronautics Board amends section 14 of 14 CFR Part 241, *Uniform System of Accounts and Reports for Certificated Air Carriers*, to read:

§ 241.14 Objective Classification—Nonoperating Income and Expense.

* * * * *

89.9 Other miscellaneous nonoperating debits.

Record here all debits of a nonoperating character not provided for otherwise, such as the following:

(a) Fines or penalties imposed by governmental authorities;

(b) Costs associated with employment discrimination that include the following:

(1) Fines or penalties paid by the carrier as a result of a judicial or administrative decree; or the amount paid to the complainant in settling or securing a consent decree;

(2) Back pay awards as a result of a judicial or adminstrative decree or of a compromise settlement regardless of whether there has been an admission of guilt;

(3) Attorneys' fees or court costs awarded to the complainant by a judicial or administrative decree or as a result of a compromise settlement regardless of whether there has been an admission of guilt;

(4) The fees of outside legal counsel or of experts retained in the unsuccessful defense of a discrimination suit or in securing a compromise settlement or consent decree, unless the amounts attributable to the discrimination are not reasonably identifiable; or

(5) Any other expenses, such as employee salaries, resulting from discriminatory employment practices that were found to be discriminatory or that were the subject of a compromise settlement or consent decree where the amounts attributable to discrimination are reasonably identifiable.

(c) Amortization expense attributable to capital leases recorded in balance sheet Account 1795, Leased Property under Capital Leases;

(d) Costs related to property held for future use;

(e) Donations for charitable, social or community welfare purposes;

(f) Losses on reacquired and retired or resold debt securities of the air carrier;

(g) Losses resulting from troubled debt retructurings;

(h) Losses on uncollectible nonoperating receivables; or

(i) Accruals to allowance for uncollectible nonoperating receivables. This account shall be charged with the amortization of amounts carried in balance sheet account 1870, Property Acquisition Adjustment, unless otherwise approved or directed by the Civil Aeronautics Board.

(Secs. 204, 404, 407, and 1002 of the Federal Aviation Act of 1958, as amended, 72 Stat. 743, 760, 766, 788, (49 U.S.C. 1324, 1374, 1377, 1482))

Phyllis T. Kaylor,

Secretary.

[FR Doc. 79-31261 Filed 10-9-79; 8:45 am]

BILLING CODE 6320-01-M

SECURITIES AND EXCHANGE COMMISSION

17 CFR Part 270

[Release No. IC-10891]

Exemption of Certain Joint Purchases of Liability Insurance Policies

AGENCY: Securities and Exchange Commission.

ACTION: Final rule.

SUMMARY: The Commission today is adopting a rule to exempt from the prohibition in the Investment Company Act of 1940 against joint transactions between investment companies and their affiliated persons the joint purchase of liability insurance policies by an investment company with certain affiliated persons of such company, provided that specified conditions are satisfied. The Commission upon application has granted exemptive orders and its staff has provided no-action assurances regarding numerous such arrangements. The proposed rule would obviate the need for such actions on a case-by-case basis.

EFFECTIVE DATE: October 4, 1979.

FOR FURTHER INFORMATION CONTACT:

Mark B. Goldfus, Special Counsel (202) 272-2048

or

Mark J. Mackey, Esq. (202) 272-3045, Investment Company Act Study Group, Division of Investment Management, Securities and Exchange Commission, 500 North Capitol Street, Washington, D.C. 20549.

SUPPLEMENTARY INFORMATION: The Commission today adopted an amendment to rule 17d-1 (17 CFR 270.17d-1) under section 17(d) of the Investment Company Act of 1940 (15 U.S.C. 80a-1 et seq.) ("Act") to allow the joint purchase by registered investment companies with certain affiliated persons of liability insurance policies. The reasons for the Commission's proposing to amend rule 17d-1 were discussed thoroughly in Investment Company Act Release No. 10700 (May 16, 1979), 44 FR 29913 (May 23, 1979). Persons interested in a more detailed discussion of the amendment should refer to that release.

In response to its request for comments regarding the proposed rule, the Commission received eight letters of comment. The commentators generally endorsed the adoption of the proposed rule, although several commentators suggested certain modifications thereof. After considering these comments, the Commission has determined to adopt the rule as proposed.

Several commentators, stating that insurance policies may be effective for more than one year, believed that under such circumstances reviewing annually an arrangement to purchase such a policy would be an empty formality. The Commission notes that, although under such a policy an investment company may be entitled to insurance coverage during a multi-year period, directors nonetheless should consider annually whether the arrangement continues to be appropriate for the particular investment company. For example, during the course of a multi-year insurance arrangement, an investment company may experience a significant decline in assets compared to other participants in the arrangement. In such circumstances, it may not be appropriate for the investment company to continue in the arrangement absent a re-allocation of the premium to be paid for future coverage.

Some commentators also questioned whether the investment company's

share of the insurance premium could be allocated according to a formula other than the rule's standard, which is based on the proportionate share of the sum of the premiums that would have been paid by the investment company if the insurance policy were purchased separately by the insured parties. The Commission emphasizes that the allocation standard set forth in rule 17d-1(d)(7) represents the *minimum* standard of fairness which must be satisfied to ensure that the investment company has not been overreached in the arrangement by any participating person. However, the Commission would have no objection to any other allocation formula which would cause the investment company to pay less (or none) of the premium compared to the rule's requirement; in other words, any allocation formula which would be more advantageous to the investment company than the minimum standard of fairness required by the rule would satisfy the fairness standard of the rule.

The Commission recognizes that participants in an arrangement may be unable, in good faith, to secure quotations for separate coverage of individual participating investment companies. In such circumstances, the premiums for aggregate coverage of the investment companies may be allocated under a reasonable formula to each investment company as though there was an actual quotation for individual coverage. However, in all circumstances, the allocation of premiums to an investment adviser or any affiliated person of an investment adviser should be based on actual documentation.

Final Rulemaking

Rule 17d-1(d)(7) allows the purchase by a registered investment company jointly with certain affiliated persons of liability insurance policies, provided that: (1) The investment company's participation in the joint liability insurance policy is in the best interests of the investment company; (2) the proposed premium for the joint liability insurance policy to be allocated to the investment company, based upon its proportionate share of the sum of the premiums that would have been paid if such insurance coverage were purchased separately by the insured parties, is fair and reasonable to the investment company; and (3) the board of directors of the investment company, including a majority of the directors who are not interested persons with respect thereto, determine no less frequently than annually that the standards described in paragraphs (1) and (2) have been satisfied.

Authority, Effective Date

The Commission, pursuant to section 6(c) (15 U.S.C. 80a-6(c)), section 17(d), and section 38(a) (15 U.S.C. 80a-37(a)) of the Act, hereby amends 17 CFR Part 270 by adding paragraph (d)(7) to § 270.17d-1 as follows. Because the rule is exemptive it is effective immediately.

Text of Amended Rule

§ 270.17d-1 Applications regarding joint enterprise or arrangements and certain profit-sharing plans.

* * * * *

(d) * * *

(7) Any arrangement regarding liability insurance policies (other than a bond required pursuant to rule 17g-1 (§ 270.17g-1) under the Act); *Provided*, That

(i) The investment company's participation in the joint liability insurance policy is in the best interests of the investment company;

(ii) The proposed premium for the joint liability insurance policy to be allocated to the investment company, based upon its proportionate share of the sum of the premiums that would have been paid if such insurance coverage were purchased separately by the insured parties, is fair and reasonable to the investment company; and

(iii) The board of directors of the investment company, including a majority of the directors who are not interested persons with respect thereto, determine no less frequently than annually that the standards described in paragraphs (d)(7)(i) and (ii) of this section have been satisfied.

By the Commission.

George A. Fitzsimmons,

Secretary.

October 4, 1979.

[FR Doc. 79-31292 Filed 10-9-79; 8:45 am]

BILLING CODE 8010-01-M

DEPARTMENT OF HOUSING AND URBAN DEVELOPMENT

Office of the Assistant Secretary for Housing—Federal Housing Commissioner

24 CFR Part 240

[Docket No. R-79-714]

Mortgage Insurance on Loans for Fee Title Purchase; Mortgage Eligibility To Pay a Discount; Effective Date; Correction

AGENCY: Department of Housing and Urban Development (HUD).

ACTION: Correction of Effective Date of Final Rule.

SUMMARY: In FR Doc. 79-29591 appearing at page 55002 in the issue for Monday, September 24, 1979, in the second column, after "Effective Date", change "October 15, 1979" to "October 25, 1979."

EFFECTIVE DATE: October 25, 1979.

FOR FURTHER INFORMATION CONTACT: Burton Bloomberg, Director, Office of Regulations, Office of General Counsel, 451 7th Street, SW., Washington, D.C. 20410, (202) 755-6207.

Burton Bloomberg,

Director, Office of Regulations.

[FR Doc. 79-31277 Filed 10-9-79; 8:45 am]

BILLING CODE 4210-01-M

---

24 CFR Part 403

[Docket No. R-79-559]

Local Rent Control

AGENCY: Office of Assistant Secretary for Housing, Federal Housing Commissioner, Department of Housing and Urban Development.

ACTION: Final rule.

SUMMARY: The Department of Housing and Urban Development (HUD) is amending the rule pertaining to local rent control to provide, in the case of unsubsidized projects, for tenant comments in the Department's preemption determinations as to the income level necessary to maintain and operate adequately the project. The amended rule sets forth new procedures for mortgagors of unsubsidized projects to follow when requesting HUD's preemption of local rent control regulations.

DATES: Effective: November 9, 1979.

FOR FURTHER INFORMATION CONTACT: James J. Tahash, Director, Occupancy Division, Office of Multifamily Housing Management and Occupancy, Department of Housing and Urban Development, Washington, D.C. 20410, (202) 755-5756 (This is not a toll-free number).

SUPPLEMENTARY INFORMATION: The Department, on (July 24, 1978) in 43 FR 32104 published a proposed regulation to amend Part 403, Local Rent Control. The regulation covered the Department's role as it pertains to the preemption of local rent control regulations. It provided for tenants of an unsubsidized project to comment on the Departmental preemption determinations as to the

income level necessary to maintain and operate adequately the project.

The Department received comments from 31 persons and institutions during the 30-day review period. After carefully considering these comments, the Department is publishing the regulations in final form.

The majority of the comments opposed the amended rule on the grounds that: (a) The Department should unilaterally preempt all of its unsubsidized insured projects (7 comments), (b) the Department lacked the authority to assert Federal Supremacy (9 comments), (c) there was no direct statutory language permitting HUD's preemption regulation (7 comments), or (d) they totally opposed the preemption regulation (13 comments). Other comments either (a) wanted public hearings prior to making the preemption final (10 comments), or (b) wanted HUD to exclude New York City from the regulations (11 comments). The Department has the authority to promulgate these regulations under section 7(d) of the HUD Act 42 U.S.C. 3535(d), however, it does not wish to unilaterally preempt all unsubsidized HUD insured, held, or owned projects but prefers the position stated in § 403.5 of the regulation. On the issue of public hearings, the Department feels that this is not necessary since the Department is providing for tenant input into the determinations by this amendment. On the issue of exempting New York City, the Department feels that it must apply the rule equally to protect its insurance exposure in New York as well as throughout the rest of the country and no exception is warranted for any individual area. It is the belief of the Department that with the increased cooperation for which these regulations provide among the Rent Control Board, HUD, and the mortgagors, the position stated in § 403.5 will prove to be acceptable to all parties concerned.

Several owners (7 comments) objected to tenant input. However, recent judicial decisions have stated the Department's obligation to provide the due process procedures embodied in these regulations. Tenant groups (5 comments) claimed the 30-day comment period was not sufficient. However, the Department has found that 30 days are sufficient for tenants to comment on rent increases in its subsidized programs. Tenant groups (5 comments) wanted a formal advisory hearing procedure. Based on our experience with tenant comments concerning rent increases in subsidized projects, such a process is not necessary because it does not increase the opportunity for meaningful comments.

Eight (8 comments) wanted the owner's return on investment to be included in the determination. These regulations do not preclude the owner's profit margin. Two (2 comments) wanted the tenant to be able to audit the owner's books and records. Since the Department requires an independent CPA audit of the owner's books and records, we do not feel this requirement is necessary.

Several comments stated that it was not clear when the project was to be returned to the control of the Local Rent Control Board. The Department believes it is clearly stated in Section 403.11(c) which provides for the project to be returned to the control of the Local Rent Control Board when the residental income level, approved by the Department at the time of the preemption determination, is reached by the project.

Several comments covered the need for the owners to maintain services. The Department, under the Regulatory Agreement executed between the mortgagor and HUD, requires the owner to maintain the project and services as required or approved by HUD. Therefore, there is no need to address this item in these regulations.

A Finding of Inapplicability respecting the National Environmental Policy Act of 1969 has been made in accordance with HUD procedures. A copy of these findings will be available for public inspection during regular business hours in the Office of the Rules Docket Clerk, Office of General Counsel, Room 5218, Department of Housing and Urban Development, 451 Seventh Street, S.W., Washington, D.C. 20410.

Accordingly, Part 403, Chapter IV of 24 CFR is amended to read as follows:

1. Table of Contents is amended as follows:

Subpart B—Unsubsidized Insured Projects

Sec.
403.5 Rental charges.
403.6 Initiation.
403.7 Notice to tenants.
403.8 Materials to be submitted to HUD in support of preemption request.
403.9 Request for preemption.
403.10 HUD procedures.
403.11 Notification of action on preemption requests.
403.12 Preemption of Prospective Term of Lease.

Subpart C—Subsidized Insured Projects

Sections 403.8 Applicability, 403.9 Rental charges, and 403.10 Procedures are renumbered as follows:

403.20 Applicability.
403.21 Rental charges.
403.22 Procedures.

Subpart D—HUD-Owned Projects

Sections 403.12 Rental charges and 403.13 Procedures are renumbered as follows:

403.30 Rental charges.
403.31 Procedures.

Subpart B—Unsubsidized Insured Projects

2. Subpart B—Unsubsidized Insured Projects is amended as follows: Section 403.5 is amended to read:

§ 403.5 Rental Charges.

The Department will generally not interfere in the regulation of rents by a rent control board or agency constituted under State or local laws (hereinafter referred to as board) for unsubsidized projects with mortgages insured or held by HUD. However, HUD will preempt the regulation of rents, together with any board regulations which require the mortgagor to offer a lease for a term in excess of one year, under certain conditions. This preemption may occur for such a project when the Department determines that the delay or decision of a board prevents the mortgagor from achieving a level of residential income necessary to maintain and operate adequately the project, which includes sufficient funds to meet the financial obligations under the mortgage."

* * * * *

Section 403.6 is recaptioned and amended to read:

§ 403.6 Initiation.

When a mortgagor determines that the permitted increase in rents as prescribed by the board will not provide a rent level necessary to maintain and operate adequately the project, and the mortgagor elects to request preemption under this subpart, it shall:

(a) File an application for whatever relief or redetermination is permitted under the State or local law and;

(b) Notify: (1) The tenants in accordance with § 403.7 of this subpart, (2) the appropriate HUD office pursuant to § 403.8, and (3) the board of the mortgagor's intention to file a request for preemption of local rent control regulation pursuant to the provisions of regulations in this subpart. This action may be taken if either the board's

written decision is unacceptable to the mortgagor or no written decision is received from the board within 30 days of the mortgagor's request under paragraph (a) of this section.

Section 403.7 is added to read:

§ 403.7 Notice to tenants.

At least 30 days before filing a formal request to HUD for preemption of local rent control regulations, the mortgagor shall notify the tenants of its intention to so file. Copies of the Notice shall be:

(a) Delivered directly or by mail to each tenant; and

(b) Posted in at least 3 conspicuous places within each structure or building in which the affected dwelling units are located.

The Notice shall contain the addresses where the materials, which constitute a complete submission as required by § 403.8 in support of the proposed preemption request, are to be made available to tenants as well as the required information in the following equivalent format:

Notice to Tenants of Intention To File a Request to HUD for Preemption of Local Rent Control Regulations

Date of Notice ——————————

Take notice that on (Date) we requested the (Name) board to review our application for redetermination of permitted rents.

Take further notice that on (Date), if the (Name) board fails to approve an income level necessary to maintain and operate adequately the project, or to act upon our request, we plan to file a request for preemption of local rent control regulations for (Name of Apartment Complex) with the United States Department of Housing and Urban Development (HUD) which will result in an increase in your rental rate as provided within the terms of your lease. The requested preemption action is supported by the following:

(1) HUD approved Gross Potential Income: Year approved, ——, $————.

(2) Current Total Residential Rents Allowed by Local Rent Control Board, $————.

(3) Projected Total Annual Residential Rents Allowable Under Local Board Regulations 6 Months After Date of this Notice, $————.

(4) Income Required to Operate Project as Supported by Profit and Loss Statement Being Submitted to HUD, $————.

Copies of the materials that we intend to submit to HUD in support of our request will be available during normal business hours as well as one evening a week after business hours which will be (Day) at (Address) for a period of 30 days from the date of this Notice. The materials may be inspected and copied by tenants of (Name of Apartment Complex and HUD Project No.) and if the tenants wish, by legal or other representatives duly authorized in writing to act for one or more of the tenants.

During a period of 30 days from the date of this notice, tenants of (Name of Apartment Complex and HUD Project No.) may submit written comments on the proposed preemption request to us at (Address). Tenant representatives may assist tenants in preparing those comments. The inspection and comment period will be extended as necessary to (a) assure a 30-day comment period on a complete mortgagor's submission and (b) to allow at least 5 days to comment on any written decision made by the board, if the decision is received by the mortgagor on or before the expiration of the thirty-day period and it was not available to the tenants during the first 25 days of the 30-day period. These comments will be transmitted to HUD, along with our evaluation of them and our preemption request. You may also send a copy of your comments directly to HUD at the following address: United States Department of Housing and Urban Development, (address of local HUD field office with jurisdiction over preemption of rents for the project) Attention: Director, Housing Re: (Project No.) and (Name of Apartment Complex). HUD will approve or diapprove the preemption request in whole or in part upon reviewing the materials and comments. When HUD advises us in writing of its decision on our request, you will be notified at least 30 days before any change in the rental structure is put into effect, in accordance with the terms of existing leases.

——————————————

(Name of mortgagor or managing agent)

The mortgagor shall comply with all representations made in this Notice.

A new § 403.8 is added to read:

§ 403.8 Materials to be submitted to HUD in support of the preemption request.

(a) After posting or delivery of the Notice as required by § 403.7, the mortgagor shall immediately send HUD notification of its intention to file a preemption request, to include:

(1) The written Notice to the tenants, which will state the date of its posting and distribution.

(2) An annual Statement of Profit and Loss, on a form prescribed by the Commissioner, audited by an independent public accountant and covering the most recently ended accounting year, and if more than four months have elapsed since the date of the Profit and Loss Statement, an unaudited accrual Profit and Loss Statement on a form prescribed by the Commissioner for the intervening period since the date of the annual statement, with the mortgagor's certification as to its accuracy.

(3) A certified statement which provides a separate breakdown for the percentage of vacancies for the present and previous year.

(4) A certified statement which provides a separate breakdown of the actual rent loss due to nonpayment of rent for the past 2 years.

(5) A certified statement which provides a separate breakdown of rent loss due to tenant turnover for the past 2 years.

(6) A certified statement covering known approved rate or cost increases not yet experienced by the project which can be documented by the following:

(i) Tax rates or appraisals,

(ii) Utility rates,

(iii) Contracts for employees or services,

(iv) Insurance, and

(7) A certified statement covering known decreases of rates or costs not yet experienced by the project which have been approved and can be documented as follows:

(i) Tax rates or appraisals,

(ii) Utility rates,

(iii) Contracts for employees or services,

(iv) Insurance.

If there are none, the mortgagor must so certify.

(8) A copy of the full application to the board with supporting documentation.

(b) The local HUD office shall review the mortgagor's submission promptly upon receipt, to ascertain that it is complete as required by paragraph (a) of this section. Should the submission be found to be incomplete, the local HUD office shall notify the mortgagor within 48 hours of the review of its determination that further material is necessary to constitute a complete submission as defined in paragraph (a) of this section.

(c) When the submission is complete, the HUD office shall hold the mortgagor's submission as specified in paragraph (a) of this section in abeyance until a preemption request is received pursuant to § 403.9.

(d) If the mortgagor subsequently resubmits any change to the submission as described in paragraphs (a) (1) through (7) of this section, it will be required to provide the tenants with an additional 30 days to comment.

A new § 403.9 is added to read:

§ 403.9 Request for Preemption.

(a) Upon expiration of the period for tenant comments required by this rule and after review of the comments submitted to it, the mortgagor may submit its request for preemption. That request must include the following:

(1) A certification by the mortgagor following the requirements specified in paragraph (b) of this section;

(2) Copies of all written comments submitted by the tenants to the mortgagor;

(3) The mortgagor's evaluation of the tenant's comments with respect to the request; and

(4) The board's decision or a statement from the mortgagor certifying that a decision from the board has not been received.

(b) The certification of the mortgagor as required by paragraph (a)(1) of this section shall include the following:

(1) That the Notice required by § 403.7 was given pursuant to the provisions of that section;

(2) That the mortgagor has taken reasonable steps to assure that the substance of the Notice has been conveyed to each resident household, and that the mortgagor exercised its best efforts to assure that the posted Notices were maintained intact and in legible form for the specified thirty (30) days;

(3) That (i) the copies of the materials submitted in support of the preemption request were located in a place reasonably convenient to tenants in the project during normal business hours and at least one evening a week after business hours, and (ii) that requests by tenants to inspect such materials, as provided for in the Notice, were honored;

(4) That copies of all comments received from the tenants were considered and are being transmitted to HUD together with the certifications; and

(5) A statement that "under the penalties and provisions of Title 18, United States Code, Section 1001, the statements contained in this application and its attachments have been examined by me and, to the best of my knowledge and belief, are true, correct, and complete."

(c) Should the mortgagor receive a delayed decision from the board after filing its preemption request, HUD shall be informed immediately and furnished with a copy of the board's decision.

A new § 403.10 is added to read:

§ 403.10 HUD Procedures.

(a) The local HUD office will review the information submitted by the mortgagor together with the decision of the board, if any. The local HUD office will, if it finds that the delay or decision of the board fails to provide adequate residential income to protect the Department's economic interest in the projects and the board will not modify its position to the satisfaction of the local HUD office, make a report with appropriate recommendations concerning the actions that should be taken by HUD to the Office of Multifamily Housing Management and Occupancy, Headquarters. The report shall be sent to the Office of Multifamily Housing Management and Occupancy, Headquarters, and shall include appropriate recommendations concerning the action that should be taken by HUD.

(b) The Office of Multifamily Housing Management and Occupancy will review the report and will consider whether to preempt the board's regulation. If it finds that the income level permitted by the board is inadequate to maintain the project as described in § 403.5, it shall issue a formal certification to the board that its authority has been preempted as to such rents. Copies of the certification shall be transmitted to the mortgagor, the local HUD office, and the board.

A new § 403.11 is added to read:

§ 403.11 Notification of Action on Preemption Request.

(a) After HUD has considered the preemption request which meets the requirements of § 403.9 and has made its determination to approve or disapprove the request, it will furnish the mortgagor with a written statement of the reasons for approval or disapproval. The mortgagor shall make known to tenants, by posting or delivery in the manner outlined in § 403.7, the reasons for approval or disapproval.

(b) The mortgagor may effect collection of the HUD-approved income level which is set at the time of the preemption determination after the expiration of 30-days notice to the tenants, subject to the terms and rights a tenant may have under the existing lease.

(c) Once the project reaches the income level approved under these procedures, the project will be returned to the control of the local rent control board covering both the rents and the terms of prospective leases.

A new § 403.12 is added to read:

§ 403.12 Preemption of Prospective Term of Lease.

(a) In those instances where it will take more than 60 days (2 months) for the project to reach the new income levels, HUD preemption of prospective lease terms shall be effective for those new or renewed leases which by regulation of a local rent control board would require the mortgagor to offer a lease for a term in excess of one year.

(b) As a condition for HUD preemption, the mortgagor must give only one-year leases to tenants whose leases expire during the preemption period.

Subpart C—Subsidized Insured Projects

3. In Subpart C—Subsidized Insured Projects, § 403.8, Applicability, 403.9 Rental charges, and 403.10 Procedures are renumbered as follows:

§ 403.20 Applicability.

* * * * *

§ 403.21 Rental charges.

* * * * *

§ 403.22 Procedures.

* * * * *

Subpart D—HUD-Owned Projects

4. In Subpart D—HUD-Owned Projects, § 403.12 Rental charges and § 403.13 Procedures are renumbered as follows:

§ 403.30 Rental charges.

* * * * *

§ 403.31 Procedures.

* * * * *

(Sec. 7d, HUD Act, (42 U.S.C. 35 35(d)).)

Issued at Washington, D.C., October 2, 1979.

Lawrence B. Simons,

Assistant Secretary for Housing—Federal Housing Commissioner.

[FR Doc. 79-31256 Filed 10-9-79; 8:45 am]

BILLING CODE 4210-01-M

---

24 CFR Part 510

[Docket No. R-79-708]

Section 312 Rehabilitation Loan Program; Interim Rule; Effective Date; Correction

AGENCY: Department of Housing and Urban Development (HUD).

ACTION: Correction of Effective Date of Final Rule.

SUMMARY: In F.R. Doc. 79-29963 appearing at page 55562 in the issue for Thursday, September 27, 1979, in the second column, after "Effective Date", change "October 17, 1979" to "October 29, 1979."

EFFECTIVE DATE: October 10, 1979.

FOR FURTHER INFORMATION CONTACT: Burton Bloomberg, Director, Office of Regulations, Office of General Counsel, 451 7th Street, S.W., Washington, D.C. 20410 (202) 755-6207.

Burton Bloomberg,

Director, Office of Regulations.

[FR Doc. 79-31278 Filed 10-9-79; 8:45 am]

BILLING CODE 4210-01-M

Office of the Secretary

24 CFR Ch. XIII

[Docket No. R-79-723

Transfer of Federal Disaster Assistance Administration Regulations

AGENCY: U.S. Department of Housing and Urban Development.

ACTION: Final rule.

SUMMARY: Reorganization Plan No. 3 of 1978 established the Federal Emergency Management Agency (FEMA). The plan was activated effective April 1, 1979, by Executive Order 12127 of March 31, 1979, "Federal Emergency Management Agency." Executive Order 12148 of July 20, 1979, transfers to FEMA the functions of the Federal Disaster Assistance Administration which was part of the U.S. Department of Housing and Urban Development. The existing regulations of the Federal Disaster Assistance Administration have been transferred to Title 44, Chapter I, Subchapter D of the Code of Federal Regulations. Therefore, Chapter XIII of Title 24 is hereby vacated.

EFFECTIVE DATE: September 28, 1979.

FOR FURTHER INFORMATION CONTACT: Mr. Burton Bloomberg, Director, Office of Regulations, Room 5218, U.S. Department of Housing and Urban Development, 451 Seventh Street, S.W., Washington, D.C. 20410. Phone (202) 755-6207.

SUPPLEMENTARY INFORMATION: Establishment of Title 44, Chapter I, Subchapter D, for the redesignated regulations, was published on Wednesday, May 2, 1979 (44 FR 25797).

The Federal Disaster Assistance Administration regulations were previously published under Title 24, Chapter XIII of the Code of Federal Regulations, and have been redesignated as Title 44, Chapter I, Subchapter D of the Code of Federal Regulations. This redesignation was published in the September 28, 1979, edition of the Federal Register at 44 FR 56172.

Because this rule effects a change which is editorial in nature, it has been determined that a period for notice and comment is not necessary.

Transfer of Regulations:

CHAPTER XIII—[Vacated]

Regulations formerly appearing in 24 CFR Chapter XIII are transferred to 44 CFR Chapter I. Accordingly, Chapter XIII of Title 24 is hereby vacated.

(Reorganization Plan No. 3 of 1978 (43 FR 41943), Executive Order 12127 of March 31, 1979 (44 FR 19367), and Executive Order 12148, dated July 20, 1979)

Issued at Washington, D.C., October 2, 1979.

Moon Landrieu,

Secretary, Department of Housing and Urban Development.

[FR Doc. 79-31291 Filed 10-9-79; 8:45 am]

BILLING CODE 4210-01-M

DEPARTMENT OF JUSTICE

Parole Commission

28 CFR Part 2

Parole, Release, Supervision and Recommitment of Prisoners, Youth Offenders and Juvenile Delinquents; Interim Rule

AGENCY: United States Parole Commission.

ACTION: Interim rule.

SUMMARY: The United States Parole Commission amends its internal voting procedures. The new procedure would require: (a) That the National Appeals Board reach a concurrence of three votes when a reversal or modification of a decision within or above the guidelines results in a parole date below the guidelines; (b) that original jurisdiction initial parole decisions be based upon a concurrence of four votes; and (c) that a Regional Commissioner must obtain a concurring vote for any regional appeal or reopen order that results in a decision below the guidelines. These procedures will be put into effect as interim rules during the period provided for the receipt of public comment.

DATES: Effective date October 10, 1979. Comments must be received by December 1, 1979.

ADDRESSES: Send comments to United States Parole Commission, Federal Home Loan Bank Board Building, 320 First Street, N.W., Washington, D.C. 20537, Attention: Office of the General Counsel.

FOR FURTHER INFORMATION CONTACT: Michael A. Stover, Office of the General Counsel, Telephone: 202/724/3092.

SUPPLEMENTARY INFORMATION: The rule is designed to ensure the integration of National Appeal Board decision-making patterns with those of the Commission as a whole.

The primary purpose of the Commission's administrative appeals procedures, as stated in the legislative history of the Parole Commission and Reorganization Act of 1976, is to "* * * identify and resolve decision patterns involving departures from national parole policies promulgated by the Commission." See 18 U.S.C. 4203(c)(4) and 2 U.S. Code Congressional and Administrative News at 355 (1976).

Thus, the National Appeals Board has the important function of ensuring that decisions of the Regional Commissioners are consistent with the national paroling policies and practices of the Commission as a whole. It does not, however, function as a court of appeals does in our legal system for it is not empowered to establish Commission policy through its decisions or to make binding interpretations of policy. Its discretion is limited to altering decisions that are demonstrably erroneous, and to correcting decisions that otherwise depart from the result that would normally be expected from the Commission. This latter form of corrective action, however, involves a considerable degree of discretion. Such action might be taken, for example, when a decision above the guidelines is clearly warranted, but the decision rendered is excessively severe, or when a decision below the guidelines would normally be expected in a case which the Regional Commissioner has left within the guidelines.

Appellate decisions to set a parole date below the guidelines have raised some concern within the Commission, because when such decisions are made, there is no automatic test of whether the decision is in conformance with general Commission practice. Therefore, the Commission has found a need to ensure that when the National Appeals Board renders a parole decision below the guidelines, the decision can be relied upon as being a valid expression of the Commission's general paroling practice. (A reversal or modification on appeal above the guidelines would not be permissible in any event, because present Commission policy prohibits appellate decisions more severe than the decision appealed from.)

The foremost feature of the rule is to require a concurrence of three votes for decisions by the National Appeals Board that are below the guidelines. This does not necessarily require a unanimous vote; split decisions will be referred to the Chairman and/or additional Commissioners as required. Such a procedure will ensure that a majority of all the Commissioners having considered the case, whether at the regional or national appellate level, have agreed with the result. The Commission considers such an agreement essential since the Commission as a whole assumes grave responsibilities to society whenever it

decides to set a convicted offender at liberty.

It is also important to recognize that Congress, at 18 U.S.C. 4206, emphasized the need for the Commission to have "good cause" for decisions outside its guidelines and that "uniformity and precision in the grant or denial of parole" is a principal goal of the Commission. See 2 U.S. Code Congressional and Administrative News at 360 (1976).

The other two changes are designed to reflect the same considerations in the context of original jurisdiction cases and Regional Commissioner decisions.

Accordingly, pursuant to the provisions of 18 U.S.C. 4203(a)(1) and 4204(a)(6), 28 CFR Part 2 is amended, and will be effective as an interim rule. We are requesting public comment in order that the Commission may study the practical feasibility of the interim rule.

Benjamin J. Malcolm,

Vice-Chairman, Parole Commission.

September 28, 1979.

28 CFR 2.26 is amended to read as follows:

§ 2.26 Appeal to National Appeals Board.

(a) Within 30 days of entry of a Regional Commissioner's decision under § 2.25, a prisoner or parolee may appeal to the National Appeals Board on a form provided for that purpose. However, any matter not raised on a regional level appeal may not be raised on appeal to the National Appeals Board. The National Appeals Board may, upon the concurrence of two members, affirm, modify, or reverse the decision, or order a rehearing at the institutional or regional level, except that a modification or reversal resulting in a decision below the guidelines shall require the concurrence of three members. Split decisions requiring additional votes shall be referred to the Chairman, and, if necessary, to other Regional Commissioners on a rotating basis as established by the Chairman.

(b) The National Appeals Board shall act within 60 days of receipt of the appellant's papers, to affirm, modify, or reverse the decision.

(c) Decisions of the National Appeals Board shall be final.

§ 2.17 [Amended].

28 CFR 2.17(a) is amended to read as follows:

(a) A Regional Commissioner may designate certain cases for decision by a quorum of Commissioners as described below, as original jurisdiction cases. In such instances, he shall forward the case with his vote, and any additional comments he may deem germane, to the National Commissioners for decision. Decisions shall be based upon the concurrence of four votes with the appropriate Regional Commissioner and each National Commissioner having one vote. Additional votes, if required, shall be cast by the other Regional Commissioners on a rotating basis as established by the Chairman of the Commission.

* * * * *

§ 2.25 [Amended]

28 CFR 2.25(b) is amended to read as follows:

* * * * *

(b) The Regional Commissioner may affirm the decision, order a new institutional hearing on the next docket, order a regional appellate hearing, or reverse or modify the decision. Reversal of a decision, or the modification of a decision by more than one hundred eighty days, or a modification resulting in a decision below the guidelines, whether based upon the record or following a regional appellate hearing, shall require the concurrence of two out of three Regional Commissioners. Decisions requiring a second or additional vote shall be referred to other Regional Commissioners on a rotating basis as established by the Chairman.

[FR Doc. 79-31257 Filed 10-9-79; 8:45 am]

BILLING CODE 4410-01-M

VETERANS ADMINISTRATION

38 CFR Part 36

Loan Guaranty; Increase in Maximum Permissible Interest Rate on Mobile Home Loans

AGENCY: Veterans Administration.

ACTION: Final regulations.

SUMMARY: The VA (Veterans Administration) is increasing the maximum permissible interest rate on guaranteed mobile home loans. The interest rate is also increased on loans for the purpose of site preparation costing $2,500 or less on a lot owned by the veteran. The maximum interest rate is increased because the former interest rate was not sufficiently competitive to induce private sector lenders to make VA guaranteed mobile home loans. The increase in the interest rate will attract funds for GI mobile homes loans; thereby, allowing veterans to purchase mobile homes with the assistance of no down payment VA loans.

EFFECTIVE DATE: October 3, 1979.

FOR FURTHER INFORMATION CONTACT: Mr. George D. Moerman, Loan Guaranty Service (264), Department of Veterans Benefits, Veterans Administration, 810 Vermont Avenue NW., Washington, D.C. 20420, 202-389-3042.

SUPPLEMENTARY INFORMATION: The Administrator is required to establish a maximum interest rate for mobile home loans guaranteed by the Veterans Administration as he finds the capital markets demand. Recent market indicators, including the general increase in interest rates charged on conventional mobile home loans and the increase in the prime interest rate, have shown that the capital markets have become more restrictive. The maximum rate formerly in effect for VA guaranteed mobile home loans was not sufficiently competitive to induce private sector lenders to make VA guaranteed mobile home loans. To assure a continuing supply of funds for mobile home loans through the VA loan guaranty program, it has been determined that an increased in the maximum permissible rate is necessary. The increased return to the lender will make VA loans competitive with other available investments and assure a continuing supply of funds for guaranteed mobile home loans.

The increase in the interest rate applies to mobile home unit loans and site preparation loans of $2,500 or less on a lot owned by the veteran. At present no change is being made in the maximum interest rate applicable to the guaranteed or insured loan programs for conventional homes or condominiums. In addition, no change is being made in the interest rate for acquisition or improvement (over $2,500) of a mobile home lot. The rate on such loans was recently increased, and the lender's return on such loans appears competitive with other forms of mortgage financing. No change in rate is justified at this time.

The increase in the maximum interest rate is accomplished by amending § 36.4212(a) (1) and (3), Title 38, Code of Federal Regulations. Compliance with the procedure for publication of proposed regulations prior to final adoption is waived because compliance would create an acute shortage of loan funds pending the final date which would necessarily be more than 30 days after publication in proposed form.

Approved: October 3, 1979.

By direction of the Administrator.

Rufus H. Wilson,

Deputy Administrator.

In § 36.4212, paragraph (a) (1) and (3) is revised as follows:

§ 36.4212 Interest rates and late charges.

The interest rate charged the borrower on a loan guaranteed pursuant

to 38 U.S.C. 1819 may not exceed the following maxima except on loans guaranteed or insured pursuant to guaranty or insurance commitments issued by the Veterans Administration prior to October 3, 1979. (38 U.S.C. 1819(f)).

(1) 12½ percent simple interest per annum on that portion of a loan which finances the purchase of a mobile home unit.

* * * * *

(3) 10½ percent simple interest per annum for that portion of the loan which will finance the cost of the site preparation necessary to make a lot owned by the veteran acceptable as the site of the mobile home purchased with the proceeds of the loan except that a rate of not to exceed 12½ percent may be charged if the portion of the loan to pay for the cost of such necessary site preparation does not exceed $2,500.

* * * * *

[FR Doc. 79-31300 Filed 10-9-79; 8:45 am]

BILLING CODE 8320-01-M

POSTAL SERVICE

39 CFR Part 111

Enclosures in Controlled Circulation Publications

AGENCY: Postal Service.

ACTION: Final rule.

SUMMARY: This rule will allow certain enclosures in publications that are mailed at the controlled circulation postage rates. Prior to this rule, enclosures of any kind were prohibited in controlled circulation publications, but not in second-class publications. This rule will simplify the mail classification structure by allowing the same enclosures in both types of publications.

EFFECTIVE DATE: October 10, 1979.

FOR FURTHER INFORMATION CONTACT: Kenneth H. Young, (202) 245-4661.

SUPPLEMENTARY INFORMATION: On August 16, 1979, the Postal Service published for comment in the Federal Register a proposed amendment to section 523 of the Domestic Mail Manual as described above (44 FR 47959). Interested persons were invited to submit written comments concerning the proposed amendment by September 15, 1979.

The Postal Service received 11 written and 8 telephonic comments in response to its August 16 notice. All commenters favored the proposal except one, who took no position on it. His comment dealt with a concern that the Postal Service was attempting to erode the distinctions between second-class and controlled circulation publications. The proposal was not intended to erode the distinctions between second-class and controlled circulation mail. The proposal was made in response to requests from mailers for a minor adjustment in the preparation requirements for controlled circulation mail. The Postal Service concluded that such a change would be beneficial and, therefore, published the proposed rule.

Another commenter suggested that order forms for both second-class and controlled circulation publications be allowed as enclosures in controlled circulation publications. This appears to be a reasonable suggestion and is consistent with the proposal. We have included it in the final rule.

Another commenter urged that we simplify the mail classification structure by having the same postal regulations applicable to both second-class and controlled circulation publications. Another commenter suggested that consideration be given to a change of the proposal and second-class regulations to allow publishers to "exchange" subscription cards on a one-for-one basis for inclusion in their publications. These suggestions go beyond the scope and intent of the proposal and, therefore, are not adopted. They will be treated separately as public proposals for changes in Postal Service regulations.

For the above reasons, and after careful consideration of all the comments, the Postal Service hereby adopts the following amendments to the Domestic Mail Manual, with certain modifications as discussed above:

Chapter 5—Controlled Circulation Mail

Amend section 523, Domestic Mail Manual, to read as follows:

523 What May Be Mailed.

523.1 Integral Material.

Except for the enclosures permitted by 523.2, only material which is an integral part of an authorized controlled circulation publication (see 541.1) may be mailed at controlled circulation rates. Provisions for combination mailings of controlled circulation publications with other classes of mail are contained in 136.31. Supplements, parts, sections, etc., are not prohibited, providing they are, in fact, integral parts of the publication. Although not required, the following are indicators (but not conclusive evidence) that material is an integral part of a publication:

a. Inclusion in the publication's pagination;

b. Listing material in a *List of Advertisers;*

c. Listing in a table of contents; or

d. Indication, in the primary part of the publication, that specific material is included as parts, sections, or supplements.

Note.—Printing "Supplement to . . ." on material is not, by itself, sufficient to establish it as an integral part of a publication.

523.2 Enclosures.

The only enclosures permitted in controlled circulation publications are receipts and orders for subscriptions. These may be inserted loose or bound in the publication. Preparation methods include, but are not limited to:

a. Printed or written;

b. Printed on cards and envelopes including business replies;

c. Arranged to include coin receptacles; or

d. Arranged as combination forms for two or more controlled circulation or second-class publications issued by the same publisher.

A transmittal letter making these changes in the pages of the Domestic Mail Manual will be published and will be transmitted to subscribers automatically.

These changes will be published in the Federal Register as provided in 39 CFR Part 111.3.

(39 U.S.C. 401(2), 403)

W. Allen Sanders,

Acting Deputy General Counsel.

[FR Doc. 79-31201 Filed 10-9-79; 8:45 am]

BILLING CODE 7710-12-M

DEPARTMENT OF HEALTH, EDUCATION, AND WELFARE

Office of the Secretary

45 CFR Part 80

Nondiscrimination in Federally Assisted Programs; Title VI of the Civil Rights Act of 1964; Policy Interpretation

AGENCY: Office for Civil Rights, Department of Health, Education, and Welfare.

ACTION: Policy interpretation.

SUMMARY: The Office for Civil Rights issues a policy interpretation of regulations under Title VI of the Civil Rights Act of 1964. The regulations concern nondiscrimination in federally assisted programs. This policy interpretation is issued in connection with the Office for Civil Rights' ongoing responsibilities to interpret and enforce Title VI. It is also prompted by the Supreme Court's decision in *Regents of the University of California* v. *Bakke*. It is one of a series of policy

determinations issued by the Office for Civil Rights under the procedures announced in the Federal Register on May 1, 1978 (43 FR 18630).

FOR FURTHER INFORMATION CONTACT: Burton M. Taylor, (202) 472-3216.

Title VI of the Civil Rights Act of 1964 Policy Interpretation Number 1

SUBJECT: Voluntary Affirmative Action: Admission of Minority Students to Institutions of Higher Education.

PURPOSE: This policy interpretation encourages institutions of higher education to continue and expand voluntary affirmative action programs to increase their enrollment of minority group members and to attain a diverse student body. It identifies permissible techniques to achieve these objectives consistent with Title VI of the Civil Rights Act of 1964 and the Supreme Court's decision in *Regents of the University of California* v. *Bakke*, 438 U.S. 265(1978) *(Bakke)*.

SUMMARY OF POLICY INTERPRETATION: An institution of higher education that receives Federal financial assistance is encouraged to take voluntary affirmative action in admissions to overcome the effects of conditions that have resulted in limited participation by minority group members and to attain a diverse student body. The Department has reviewed the Supreme Court's decision in *Bakke* and has determined that voluntary affirmative action may include, but is not limited to, the following: consideration of race, color, or national origin among the factors evaluated in selecting students; increased recruitment in minority institutions and communities; use of alternative admissions criteria when traditional criteria are found to be inadequately predictive of minority student success; provision of preadmission compensatory and tutorial programs; and the establishment and pursuit of numerical goals to achieve the racial and ethnic composition of the student body the institution seeks.

Techniques of this kind are permissible regardless of whether there has been a finding of past discrimination. Where such a finding has been made, an institution has a duty to overcome the effects of past discrimination and, therefore, may be required to employ these as well as other race conscious techniques to overcome the present effects of past discrimination. These additional techniques also may be employed by colleges and universities to overcome the effects of discrimination found to have been committed by related institutions. However, in light of *Bakke*, in the absence of a finding of past discrimination committed by the institution or related entities, a fixed number of positions may not be set aside for minority students, for which nonminority students cannot compete, nor may race or national origin otherwise be used as the sole criterion for admissions.

POLICY INTERPRETATION: Title VI of the Civil Rights Act of 1964 prohibits institutions of higher education that receive or benefit from Federal financial assistance from discriminating against applicants for admission on the basis of race, color, or national origin. The primary purpose of the statute was to eliminate widespread discrimination against blacks and other minorities in Federally-assisted programs. Accordingly, the Department's Title VI regulation requires recipients of Federal financial assistance, when found to be discriminating, to end any current discrimination and to take affirmative action to overcome the effects of past discrimination.

Findings of discrimination can be made by a legislative, judicial or administrative body, including the Office for Civil Rights. The regulation also permits a recipient to take affirmative action to overcome the effects of conditions that have resulted in limited participation by persons of a particular race, color, or national origin and to attain a diverse student body. This is permitted even though the recipient has not itself discriminated against these groups.

The Department has reviewed its Title VI regulation, in light of the Supreme Court's decision in *Bakke*, and has concluded that no changes in the regulation are required or desirable. The Court affirmed the legality of voluntary affirmative action. However, where there has been no finding of past discrimination, *Bakke* prohibits an institution from setting aside a fixed number of places for minority students for which nonminorites cannot compete, or otherwise using race as the sole criterion for admission.

The limitations contained in *Bakke* apply only to institutions undertaking voluntary affirmative action. The decision has no bearing on the legal obligation of an institution which has been found, by a court, legislature or administrative agency, to have discriminated on the basis of race, color, or national origin. Race conscious procedures that are impermissible in voluntary affirmative action programs may be required to correct specific acts of past discrimination committed by an institution or other entity to which the institution is directly related. For example newly established public institutions of higher education in a State that formerly maintained segregated colleges may be required to participate in a desegregation plan to provide a complete remedy for past discrimination.

The Department encourages the continuation and expansion of voluntary affirmative action programs. This policy interpretation provides guidance to institutions of higher education that are not responding to a finding of past discrimination as to permissible means of increasing minority student enrollments under the Department's Title VI regulation. One illustration of permissible voluntary action is stated in the regulation:

> Even though an applicant or recipient has never used discriminatory policies, the services and benefits of the program or activity it administers may not in fact be equally available to some racial or nationality groups. In such circumstances, an applicant or recipient may properly give special consideration to race, color, or national origin to make the benefits of its program more widely available to such groups, not being adequately served. For example, where a university is not adequately serving members of a particular racial or nationality group, it may establish special recruitment policies to make its program better known and more readily available to such group, and take other steps to provide that group with more adequate service.

Other methods of considering race, color, or national origin in voluntary affirmative action programs, consistent with *Bakke* and the Department's regulation, include but are not limited to the following:

An institution may:

(1) Consider race, color, or national origin as a positive factor, with other factors, such as geographic or economic circumstance, in selecting from among qualified candidates. The relative weight granted to each factor is properly determined by institution officials; race, color or national origin may be accorded greater weight than other factors;

(2) Recruit, or increase recruiting, in predominantly minority institutions and communities;

(3) Modify admissions criteria for minorities if it determines that it is necessary for a fair appraisal of the academic promise of minority applicants. This may be appropriate to cure established inaccuracies in predicting performance where an institution can demonstrate that traditional admissions criteria are not predictive of success for minority students;

(4) Offer special services, including summer institutes and special tutoring

services, to assist educationally and socially disadvantaged students in meeting admissions requirements. Students may not be excluded from these programs on the basis of race, but race may be considered as a factor in selecting participants; and

(5) Establish and pursue numerical goals to achieve the racial and ethnic composition of the student body it seeks through techniques such as those listed above.

In addition to the foregoing techniques, institutions may use their authority to broaden admissions criteria generally to evaluate better the qualifications of minority applicants. This may be accomplished by giving increased consideration to an applicant's character, motivation, ability to overcome economic and educational disadvantage, work experience, and other factors.

All of these techniques are consistent with Title VI because they do not exclude individuals on the basis of race, color, or national origin from competing for any place in an institution of higher education. The Department encourages the development of additional or alternative techniques for inclusion in voluntary affirmative action plans.

§ 80.3 [Amended].

(b)(6) * * *

(i) In administering a program regarding which the recipient has previously discriminated against persons on the ground of race, color, or national origin, the recipient must take affirmative action to overcome the effects of prior discrimination.

(ii) Even in the absence of such prior discrimination, a recipient in administering a program may take affirmative action to overcome the effects of conditions which resulted in limiting participation by persons of a particular race, color, or national origin.

Section 80.5(j).

Even though an applicant or recipient has never used discriminatory policies, the services and benefits of the program or activity it administers may not, in fact, be equally available to some racial or nationality groups. In such circumstances, an applicant or recipient may properly give special consideration to race, color or national origin to make the benefits of its program more widely available to such groups, not then being adequately served. For example, where a university is not adequately serving members of a particular racial or nationality group, it may establish special recruitment policies to make its programs better known and more readily available to such group, and take other steps to provide that group with more adequate service.

Coverage: This policy interpretation applies to any public or private institution of higher education that receives or benefits from financial assistance authorized or extended under a law administered by the Department. Coverage includes institutions whose students participate in HEW funded or guaranteed student loan assistance programs. For further information, see definition of recipient at 45 CFR 80.13(i) and (j).

Regulation issued under Title VI of the Civil Rights Act of 1964, 45 CFR.

Dated: October 2, 1979.

David S. Tatel,

Director, Office for Civil Rights.

[FR Doc. 79-31218 Filed 10-9-79; 8:45 am]

BILLING CODE 4110-12-M

INTERSTATE COMMERCE COMMISSION

49 CFR Parts 1011 and 1100

[Ex Parte No. 367]

Tariff Integrity Board

AGENCY: Interstate Commerce Commission.

ACTION: Final rules.

SUMMARY: The Commission is adopting rules which will provide tariff users with a simplifed and expedited procedure for striking from its files tariffs which have been established in violation of the Commission's tariff regulations, provisions of the Interstate Commerce Act, and orders of the Commission or the courts. The rules are being adopted as a result of the Commission's change to a random sampling tariff examination program. It is expected that under the sampling program unlawfully established tariffs may become effective.

EFFECTIVE DATE: The rules are effective on October 10, 1979.

FOR FURTHER INFORMATION CONTACT: Martin E. Foley, (202) 275-7348.

SUPPLEMENTARY INFORMATION: As outlined in our notice served June 29, 1979 (44 FR 39558), we are in the process of establishing a random sampling tariff examination program for checking compliance with tariff regulations (49 CFR 1300 *et seq.*) the provisions of the Interstate Commerce Act (49 USC 10101 *et seq.*), and orders of the Commission or courts. We expect that under the sampling program, which will begin October 1, 1979, some tariffs may become effective which are unlawfully established or contain unlawfully established provisions. The causes for the unlawful establishment would have been reason for rejection if detected prior to effective dates. The institution of the Tariff Integrity Board (or T.I. Board) and the adoption of the rules under which it will operate provide an expedited procedure by which a tariff user may file a verified complaint to establish that a tariff or tariff provision has been unlawfully established. In our previous notice we sought comments concerning the rules.

The comments we received indicate that there is both support for and opposition to random sampling tariff examination and the implementation of T.I. Board. In the following paragraphs we will respond to key questions and issues raised by the respondents. Issues and questions not specifically discussed have been considered and are viewed as either requiring no comment or related to those which are specifically treated.

Random Sampling

A substantial amount of criticism was directed toward the implementation of the random sampling tariff examination program. Our reconsideration of this program is requested.

The sampling program was adopted as a result of the Commission's Fiscal Year 1980 budget deliberations. The institution of this program is an agency procedural change which does not require a rulemaking proceeding (5 U.S.C 553). We do not intend to reconsider the implementation of the program at this time. However, we will explain why the program is to be implemented and how it will operate. Of course, if we should determine at some future date that the program is not in the public interest or otherwise undesirable, we may adopt alternative tariff examining procedures.

In the past the Commision has attempted to examine thoroughly every tariff publication which was filed. This has become an impossible task. In the past 5 fiscal years 1,827,317 publications have been received for filing, over 500,000 filings are expected to be filed in Fiscal Year 1979. In view of this ever increasing number of filings our staff simply cannot effectively examine every publication filed. Consequently, as an alternative to complete examination, the Commission has developed statistical sampling techniques which will reduce the number of publications subjected to an indepth examination for tariff publishing violations. The sampling program will not reduce our present consumer oriented tariff examination program.

The Commission recognizes its responsibility to the protection of the shipping public, especially the small consumer, and its statutory obligations.

We feel that the random sampling tariff examination program, and the T.I. Board, will allow the Commission better to fulfill its responsibilities and obligations. Our program of complete examination is not practical in view of the number of present day filings and the limited resources available to us for performance of that examination. In the past, complete examination was workable; however, we now realize that such a task is impossible to accomplish effectively. We are changing our procedures for the examination of tariffs to accommodate present and future filings.

Under the sampling program a small percentage of tariff filings will be randomly selected for examination. The remaining publications will not be reviewed for tariff publishing violations. Thus, it could develop that a tariff may not be examined for publishing errors, but a supplement or supplements to the tariff may be examined. Of course, examination of the supplement(s) would require referral to the previously unexamined tariff. If publishing errors are noted in the original tariff, their existence will be brought to the attention of the tariff publisher for correction or for guidance in the preparation of future publications. Tariffs which have been in effect for less than 60 days and which contain publishing violations would be subject to the T.I. Board's consideration and the possibility of being stricken from the Commission's files. Violations contained in tariffs which have been in effect for longer than 60 days would be subject to treatment on the Commission's formal docket.

The Tariff Integrity Board is being created to allow tariff users (shippers, receivers and carriers) an expedited procedure under which they may complain of potentially unlawfully established tariff matter not detected under the sampling procedures. With the number of filings we receive it is inevitable that a certain amount of unlawfully established publications will become effective. Albeit rarely, this has happened already under our program of complete examination. The T.I. Board's purpose will be to rid the Commission's files of unlawfully established publications and thereby eliminate any injustices such publications may create.

Decisions of the Tariff Integrity Board

The T.I. Board's decisions will order stricken from the Commission's files publications, or portions of publications, which have been found to have been unlawfully established. The T.I. Board will act upon verified complaints. In its strike orders the T.I. Board will identify the stricken material. Stricken material will be considered as never having been lawfully established and therefore, invalid. Carriers must review charges collected while unlawfully established matter was in effect for the existence of any overcharges or undercharges. Where overcharges exist carriers have an obligation to make appropriate refunds. (Ex Parte No. 342, *Overcharge Dup. Payment or Overcharge Claims,* 358 I.C.C. 114 (1978)). Where undercharges exist carriers must collect the proper tariff charges.

The above discussed effect of the T.I. Board's strike decision is a matter of considerable concern to a number of those responding to the notice. The original notice in this proceeding did not specifically discuss that effect, but we have modified the rules adopted here to clarify the effect of the T.I. Board's strike decisions.

Without an ex post facto effect, the decisions of the Tariff Integrity Board would not treat any injury which may have been experienced by carriers, shippers or receivers during the time period unlawfully established tariff matter was effective. We realize that the ex post facto remedy of the T.I. Board is a departure from some of the past views and actions of the Commission. However, we cannot ignore the fact that with an increasing number of tariffs being filed, the tariff user must be provided an expedited procedure which will allow for the quick removal of unlawfully established tariff matter.

Thus, in order for this Commission effectively to fulfill its statutory obligations and also to pursue its goal of tariff simplification, we must make changes from past practices and views in order to accommodate present day needs. The Interstate Commerce Act requires that this Commission ensure the "preservation of a transportation system that meets the transportation needs of the United States * * *" (49 U.S.C. 10101). Important parts of such a system are tariffs which the system's users are able to utilize and understand. The Commission has spent much time in the formulation of rules governing the construction, filing, and posting of tariffs. Several lengthy Commission proceedings have been conducted wherein the Commission has ordered that certain requirements must be met when filing tariffs. The noncompliance with these and other applicable requirements is the main target of the Tariff Integrity Board.

The T.I. Board's strike decisions will not be based on the merits of the rates and charges in any particular tariff. This is consistent with the past and present practices in that the Commission's tariff rejections are not and have not been so based. The T.I. Board's strike decisions will be based on some defect in the publication or filing of a tariff publication which makes it an unlawfully established publication and, hence, invalid from the very start.

Tariff Examining Responsibility

Several of the comments were critical of an apparant attempt on the part of the Commission to force its tariff examination responsibility on a public which does not have the examining expertise of this Commission's staff. However, we have relied upon public comment in the past concerning troublesome publications. The creation of the Tariff Integrity Board merely codifies our past reliance. The factors which constitute an unlawfully established tariff (Proposed § 1100.22a(b)) are not factors which would require a great deal of expertise to recognize.

Special Permission Authority

Some of the respondents requested that the Commission issue an outstanding special permission under which publishers could, on less than statutory notice, correct alleged publishing errors subsequent to their published effective dates. We feel there is merit to this suggestion and our staff will prepare a special permission decision for consideration which would work in conjunction with the Tariff Integrity Board. The use of any such decision will be conditioned upon the refund of any overcharges collected as a result of unlawfully established tariff provisions or the collection of undercharges. Of course, carriers and tariff publishers may continue to seek special permission authority on an individual basis.

Time Periods

A number of the comments addressed the proposed time periods under which the T.I. Board would function. The 60-day period for the filing of complaints subsequent to published effective dates was criticized as being both too short and too long. We feel the 60-day period is the most desirable period. The 60-day period provides tariff users with sufficient time for the detection of publishing errors. This detection may be made after tariff review or after billing for transportation services. A period longer than 60 days does not appear to be appropriate and a shorter period provides too little opportunity for examination and complaint. Those wishing to file complaints after unlawfully established tariff matter has been in effect for over 60 days have the

right to file a formal complaint with the Commission in the form and manner prescribed by our General Rules of Practice.

The strike decisions of the Tariff Integrity Board will become effective on the date of their service to the parties of complaints and to the public. We do not wish to set any time limits for a decision by the T.I. Board; however, we expect the cases handled will be subject to quick disposition. We intend to provide adequate staffing for the handling of complaints filed for the T.I. Board's consideration.

In the case of partially stricken publications, such as an item or other provision published in an otherwise lawful publication, the carrier or tariff publishing agent will be directed to amend its tariff to reflect that the tariff matter has been stricken from the Commission's files. In the case of publications that are stricken in their entirety, the publishing agent or carrier will be directed to issue a supplement or otherwise amend its tariff to reflect that the publication has been stricken from the Commission's files.

The appeal periods for an action of the Tariff Integrity Board will be those which are provided by the Commission's General Rules of Practice, namely 20 days from the date of service for a decision involving a rail publication and 30 days from the date of service of a decision involving a nonrail publication. The tariff provisions which are to be applied during the appeal period are those which were superseded by those which the T.I. Board has determined to be unlawfully established. In the event a T.I. Board decision is overruled, adjustments would have to be made for the time period between the T.I. Board's decision and that of the overruling body.

The time periods for the filing of answers to complaints and replies to answers were also criticized. The need for these periods was questioned. In order to allow all parties the opportunity to comment, we will maintain these periods. We feel that the 10-day answer period proposed is an adequate amount of time for publishers to respond to a complaint. If publishers find they are running out of time, they can always file their answer in the form of a telegram to be followed up by written confirmation. The proposed 7-day reply period does appear to be insufficient and therefore, it will be extended to 10 days.

Factors Constituting an Unlawfully Established Tariff

Some of the respondents requested clarification of the factors which would constitute an unlawfully established tariff (Proposed § 1100.22a(b)). A publication which provides an erroneous cancellation is one which cancels matter which was obviously not intended for cancellation. The results of an erroneous cancellation are usually the elimination of rate items, the creation of duplicating and/or conflicting rates, charges, provisions, or rules, and general confusion for the tariff user. Normally erroneous cancellations are quickly removed by tariff publishers; however, we feel the inclusion of this factor in the types of problems to be considered by the Tariff Integrity Board will encourage tariff publishers to exercise greater care in the preparation of tariff publications. Further, inclusion of the factor will give tariff users relief from any hardship which may result from improper and unintended cancellations.

The orders of the Commission or courts referred to in new §1100.22a(b) are those dealing with all matters which would be subject to publication in tariff form. Thus, the orders would not only be those pertaining to tariff publishing mechanics, but also those pertaining to Commission and court orders which place requirements on carriers to be reflected by tariff publication.

The duplicating rate schedules cited in new §1100.22a(b) are those which would duplicate one another in rate, charge, provision, or rule application. In some instances such duplication results in differing rate or charge levels being applicable for a transportation service. This problem is usually created by a failure of tariff publishers to make appropriate cancellations. The confusion and ambiguity created by duplicating rates is considered by this Commission to be cause for rejection prior to effective date and an appropriate cause for a strike decision by the Tariff Integrity Board.

Petitions for Suspension

A comment was received which asks that the proposed rules be modified to preclude a petitioner for the suspension and investigation of a tariff publication from subsequently filing a complaint with the Tariff Integrity Board in the event the petition for suspension is denied. The petition for suspension would be required to identify any publishing errors which would necessitate rejection. If such errors were not identified and the petition for suspension was denied, the petitioner could not subsequently file a complaint with the T.I. Board. We cannot agree with this restriction. The T.I. Board is being created to consider publishing errors which are not detected prior to published effective dates. Publishing errors noticed prior to effective dates may still be brought to the attention of the Commission for rejection consideration. To deny a petitioner the right of complaint before the T.I. Board would not be in keeping with our intentions in this proceeding.

Verified Complaints

Some of the comments were critical of the requirement that verified complaints must be submitted to the T.I. Board. Generally, the respondents viewed this requirement as being too burdensome. The verified complaint requirement is in line with our General Rules of Practice. We do not consider the requirement as being burdensome. In any event, those submitting a nonverified complaint will be contacted concerning this discrepancy and asked to amend their complaint. Otherwise, it will not be considered.

Examined Tariffs

Some respondents feel that tariffs which are subject to random sampling examination should not be subject to the review of the Tariff Integrity Board. They contend that a list of the examined tariffs should be provided in advance to the public. We do not agree. We cannot predict beforehand which tariff publications will be examined. The publications to be examined will be randomly selected from the filings we receive. Further, the sampling program and its procedures will be subject to continuing review and possible change where appropriate. The formulation of a list of publications which are to be examined would be an administrative impossibility. Further, our staff may inadvertently overlook a publishing error which could subsequently cause concern to a tariff user. To deny an affected user the right of complaint would not be in line with our intentions in this proceeding.

Mandatory Strike Decision

We received a comment which was critical of proposed § 1100.22a(e)(3). The respondent indicated that the wording of the provisions should be changed to provide that in the event the Tariff Integrity Board finds that a tariff publication has been unlawfully established, the T.I. Board shall enter an order striking the tariff from our files. The proposed rule provides that the T.I. Board *may* strike the unlawful publication. We wish to allow the Tariff Integrity Board a degree of flexibility in its decisions. Changing the proposed rule to a mandatory strike requirement would deny the T.I. Board the desired flexibility.

Use of the Word "Tariff"

Our desire to provide the T.I. Board with flexibility also addresses the questions posed by several respondents concerning what the T.I. Board will strike. The wording of the proposed rules provides that the T.I. Board may strike a "tariff" which it finds to be unlawful. The word "tariff" as used in this context includes all forms of tariff publications filed with the Commission. This includes supplements, loose-leaf page amendments, tariffs, schedules and the separate provisions of the publications. The T.I. Board may strike an entire publication or it may strike only a portion of a publication. What actually will be stricken will be determined by the T.I. Board on a case-by-case basis.

Rate Bureau Publications

It is suggested that when a rate bureau publication is the subject of a complaint, a copy of the complaint should also be served on the affected carrier or carriers. We do not agree with this suggestion. The rate bureau responsible for the publication of the complaint of tariff or tariff provision is to be held accountable for what it publishes. The bureaus should advise affected carriers of the existence of any complaints. The burden of this advice should not be placed upon complainants or upon the Commission.

A question was raised as to whether or not a rate bureau may file a complaint with the T.I. Board concerning a member carrier's independent action publication in a bureau's own tariff. The response to this question is "no". We can conceive of only few instances that independent action instructions would command tariff publishers to violate tariff publishing regulations, provisions of the Act, or orders of the Commission or the courts. In those instances there is no prohibition against bureau advisement of such violations to the Commission prior to the effective date. We emphasize that any such advisements must not run to substantive issues, such as reasonableness of rates or charges, etc. Moreover, rate bureaus may not petition for the suspension of independent actions. To allow rate bureaus the right of complaint before the tariff Integrity Board concerning their own tariffs would be inconsistent. However, rate bureaus may file complaints with the T.I. Board concerning tariffs other than their own.

Initial Filings

The question was raised in the comments about what provisions would apply in the event the T.I. Board ordered initial rates stricken from our files. This is a remote possibility; however, it is possible that initial filings will be subject to a strike action. In such cases the T.I. Board will be governed by the facts and circumstances of the case in its decision. The fact that an initial filing is involved would certainly be taken into consideration. Of course, should publishing errors be noted prior to published effective dates, publishers may utilize existing special permission decisions to make corrections or may seek specific special permission authority to effect corrections.

Inadvertent Publishing Errors

A comment was recived which suggested that the Tariff Integrity Board should concern itself only with inadvertent publishing errors and not with unlawfully established tariffs. Publishing errors, whether inadvertent or intentional, which fall into any of the categories cited in new Section 1100.22a(b), may be viewed as constituting unlawful tariff publication. Where tariff provisions are found to be unlawfully established and are ordered stricken, the provisions will be considered as invalid.

Need for Tariff Integrity Board

A comment indicated that with a proper sampling program there would not be a need for the T.I. Board. We have spent a great deal of time formulating the random sampling program and we have every intention of assuring that the program will work. We are creating the T.I. Board at this time in order to provide a backup for the sampling program.

Publishing Attitudes and Practices

The comments indicated that there is concern that under the sampling program publishers will become lax in their duties. Further, a fear of intentional publishing errors is expressed. We feel that the presence of the Tariff Integrity Board and the effect of its decisions should sufficiently preclude apathetic or unscrupulous attitudes and practices.

Conclusion

In our original notice in this proceeding we proposed to amend Part 1011 of Title 49 of the Code of Federal Regulations by adding a new paragraph (k) to § 1011.6. The new paragraph should be designated as paragraph (j). This correction will be made in the adopted rules.

The rules proposed in our notice served June 29, 1979, will be adopted as modified:

This decision does not affect significantly the quality of the human environment or energy consumption.

PART 1011—COMMISSION ORGANIZATION; DELEGATIONS OF AUTHORITY

1. Part 1011 of Title 49 of the Code of Federal Regulations is amended by adding a new paragraph (j) to § 1011.6 as follows:

§ 1011.6 Employee Boards.

* * * * *

(j) *Tariff Integrity Board:* Determination of complaints alleging that a tariff has been unlawfully established in violation of the Interstate Commerce Act, the Commission's Tariff Regulations, or orders of the Commission or the courts, for which the tariff would have been subject to rejection had the violation been detected before the tariff became effective.

It is ordered:

PART 1100—GENERAL RULES OF PRACTICE

2. Part 1100 of Title 49 of the Code of Federal Regulations is amended by adding Section 1100.22a as follows:

§ 1100.22a Special procedures for dealing with unlawfully established tariffs or rates.

(a) *Scope of special rules:* (1) These special rules govern the filing and processing of complaints that allege that a tariff has been unlawfully established in violation of a provision of the Interstate Commerce Act, the Commission's tariff regulations (49 CFR 1300 *et seq.*), or orders of the Commission or a court.

(2) These rules apply only to an unlawfully established tariff that would have been subject to rejection had the violation been detected before the tariff became effective.

(3) These rules do not apply to complaints alleging substantive violations, such as unreasonableness, undue preference, prejudice or discrimination.

(b) *Definition of unlawfully established tariff:* For the purposes of these rules a tariff is unlawfully established if it does any of the following: (1) Fails to give proper statutory notice; (2) omits or uses symbols improperly; (3) contains typographical errors that prevent proper tariff application; (4) contains erroneous cancellation(s); (5) violates the Commission's tariff regulations, statutory provisions of the Interstate Commerce Act, or orders of the Commission or a court; (6) purports to

change rate schedules that have been in effect less than 30 days; and (7) contains duplicating rate schedules.

(c) *Form and content of complaint:* (1) While no special form of complaint is required, the complaint must contain information that specifically identifies the tariff in issue by name, number, publishing official, effective date and item number.

(2) The complaint must set out all the facts that the complainant believes demonstrate that the tariff has been unlawfully established.

(d) *Answer and reply:* (1) The issuing carrier or publishing agent may answer the complaint in writing not later than 10 days after the filing of the complaint with the Commission.

(2) The complainant may file a written reply not later than 10 days after the filing of the answer with the Commission.

(e) *Processing of complaints:* (1) Complaints will be serially numbered as filed.

(2) After reviewing the challenged tariff and the pleadings, the Tariff Integrity Board will make necessary findings and determine whether the tariff has been unlawfully established in violation of the Interstate Commerce Act, the Commission's tariff regulations, or a Commission or court order.

(3) If the Tariff Integrity Board finds that a tariff has been unlawfully established, it may enter an order striking the tariff from the files. Unlawfully established tariff matter is invalid and may not be applied for services performed prior to, on, or after the date of service of the Tariff Integrity Board's decision.

(4) An administrative appeal of the Tariff Integrity Board's decision may be taken, as appropriate, pursuant to Rules 96–98 of the rules of practice (49 CFR 1100.96–97).

(5) If there is a disputed issue of material fact, the Tariff Integrity Board will refer the matter to the Commission for handling under the formal complaint procedure (49 CFR 1100.24 *et seq.*).

(f) *Time limits:* (1) A complaint must be filed within 60 days of the tariff's effective date in order to be considered under these special rules.

(2) Complaints filed more than 60 days after a tariff's effective date will be handled under, and must comply with, the Commission's formal complaint procedures (49 CFR 1100.24, *et seq.*).

(3) Requests for extensions of time to file answers or replies will not be granted except in extraordinary circumstances.

(g) *Miscellaneous provisions:* (1) All pleadings (complaint, answer, reply) must comply with the attestation and verification procedures of Rule 15 of the rules of practice (49 CFR 1100.15).

(2) All pleadings should be addressed to the Secretary, Interstate Commerce Commission, Attention: Tariff Integrity Board, Washington, D.C. 20423.

(3) The complainant shall serve a copy of its complaint and reply, if any, on the issuing carrier or publishing agent.

(4) The issuing carrier or agent shall serve a copy of its answer on the complainant.

(5) All pleadings shall include a statement certifying that a copy of the pleading has been served on other parties.

3. Part 1100 of Title 49 of the Code of Federal Regulations is amended by revising paragraphs (a) and (b) of § 1100.225 to read as follows:

§ 1100.225 Rules of practice governing the procedures of the Motor Carrier Board, the Finance Board, the Operations Boards, the Special Permission Board, the Released Rates Board, the Tariff Rules Board, the Special Docket Board, and the Tariff Integrity Board. (Rule 225).

(a) The proceedings of the Motor Carrier Board, the Finance Board, the Operations Boards, the Special Permission Board, the Released Rates Board, the Tariff Rules Board, the Special Docket Board, and the Tariff Integrity Board shall be informal. No transcript of these proceedings will be made. Subpoenas will not be issued and except when applications, petitions, or statements are required to be attested, oaths will not be administered.

(b) A petition for reconsideration of an order of the Motor Carrier Board, the Operations Boards, the Special Permission Board, the Released Rates Board, the Tariff Rules Board, the Special Docket Board, or the Tariff Integrity Board may be filed by any interested person.

* * * * *

This rulemaking was promulgated under authority contained in 49 U.S.C. 10321, 10762, 10304, and 10305 and 5 U.S.C. 553 and 559.

Dated: September 27, 1979.

By the Commission, Chairman O'Neal, Vice Chairman Stafford, Commissioners Gresham, Clapp, Christian, Trantum, Gaskins and Alexis. Vice Chairman Stafford concurring in part. Commissioner Christian was absent and did not participate in the disposition of this proceeding.

Agatha L. Mergenovich,

Secretary.

Vice Chairman Stafford, concurring in part:

The pleadings in response to this rulemaking strengthen my opposition to tariff examination on a random sampling basis. The draft decision misrepresents the facts when it states, on Sheet 2, that the "comments * * * indicate * * * support for and opposition to random sampling tariff examination and the implementation of the T. I. Board." In fact, all carriers (rail and motor) were opposed, as were all but 3 shippers. The decision should state that there is overwhelming opposition to the proposals.

Nevertheless, the T. I. Board is clearly necessary in view of the new policy of random tariff examination. Hopefully the questions raised about its operations will be resolved soon, without undue disruption and inconvenience.

[FR Doc. 79-31223 Filed 10-9-79; 8:45 am]

BILLING CODE 7035-01-M

Proposed Rules

Federal Register
Vol. 44, No. 197
Wednesday, October 10, 1979

This section of the FEDERAL REGISTER contains notices to the public of the proposed issuance of rules and regulations. The purpose of these notices is to give interested persons an opportunity to participate in the rule making prior to the adoption of the final rules.

FEDERAL TRADE COMMISSION

16 CFR Part 13

[File No. 792-3023]

Harvey Glass, M.D.; Consent Agreement With Analysis To Aid Public Comment

AGENCY: Federal Trade Commission.

ACTION: Consent agreement.

SUMMARY: In settlement of alleged violations of Federal law prohibiting unfair acts and practices and unfair methods of competition, this consent order, accepted subject to final Commission approval, among other things, would require a Cherry Hill, N.J. dermatologist to cease, in connection with endorsing, advertising or sale of products, representing that the use of "Acne Lotion 22," "Acne Masque," or any other acne product or regimen will cure acne; eliminate bacteria-caused skin blemishes; and result in a blemish-free skin. Dr. Glass would also be prohibited from disseminating advertisements and/or permitting his endorsement to appear in advertisements which misrepresent or make unsubstantiated claims regarding a product's efficacy, use or performance; the extent to which a product has been tested; and the results of such tests.

DATE: Comments must be received on or before December 10, 1979.

ADDRESS: Comments should be directed to: Office of the Secretary, Federal Trade Commission, 6th St. and Pennsylvania Ave., NW., Washington, D.C. 20580.

FOR FURTHER INFORMATION CONTACT: FTC/P, Albert H. Kramer, Washington, D.C. 20580. (202) 523-3727.

SUPPLEMENTARY INFORMATION: Pursuant to Section 6(f) of the Federal Trade Commission Act, 38 Stat. 721, 15 U.S.C. 46 and § 2.34 of the Commission's rules of practice (16 CFR 2.34), notice is hereby given that the following consent agreement containing a consent order to cease and desist and an explanation thereof, having been filed with and accepted, subject to final approval, by the Commission, has been placed on the public record for a period of sixty (60) days. Public comment is invited. Such comments or views will be considered by the Commission and will be available for inspection and copying at its principal office in accordance with § 4.9(b)(14) of the Commission's rules of practice (16 CFR 4.9(b)(14)).

[File No. 792-3023]

Harvey Glass, M.D.; Agreement Containing Consent Order to Cease and Desist

The Federal Trade Commission having initiated an investigation of certain acts and practices of Harvey Glass, M.D., an individual, sometimes hereinafter referred to as proposed respondent, and it now appearing that proposed respondent is willing to enter into an agreement containing an order to cease and desist from the use of acts and practices being investigated;

It is hereby agreed by and between the said proposed respondent and his attorney, and counsel for the Federal Trade Commission that:

1. Proposed respondent Harvey Glass, M.D., is a medical doctor, licensed to practice by the State of New Jersey, with a specialty in dermatology. He maintains a main office at the Old Orchard Professional Building, 1999 East Marlton Pike (Route 70), Cherry Hill, New Jersey 08034.

2. Proposed respondent admits all the jurisdictional facts set forth in the draft of complaint here attached.

3. Proposed respondent waives:

(a) Any further procedural steps;

(b) The requirement that the Commission's decision contain a statement of findings of fact and conclusions of law; and

(c) All rights to seek judicial review or otherwise to challenge or contest the validity of the order entered pursuant to this agreement.

4. This agreement shall not become a part of the official record of the proceeding unless and until it is accepted by the Commission. If this agreement is accepted by the Commission it, together with the draft of complaint contemplated thereby, will be placed on the public record for a period of sixty (60) days and information in respect thereto publicly released; and such acceptance may be withdrawn by the Commission if comments or views submitted to the Commission disclose facts or considerations which indicate that the order contained in the agreement is inappropriate, improper, or inadequate.

5. No agreement, understanding, representation, or interpretation not contained in the order of the aforementioned agreement may be used to vary or contradict the terms of the order.

6. This agreement is for settlement purposes only and does not constitute an admission by proposed respondent that the law has been violated or that any of the facts are true as alleged in the draft of the complaint here attached.

7. This agreement contemplates that, if it is accepted by the Commission, and if such acceptance is not subsequently withdrawn by the Commission pursuant to the provisions of § 2.34(b) of the Commission's rules, the Commission may, without further notice to proposed respondent, (1) issue its complaint corresponding in form and substance with the draft of complaint here attached and its decision containing the following order to cease and desist in disposition of the proceeding and (2) make information public in respect thereto. When so entered, the order to cease and desist shall have the same force and effect and shall become final and may be altered, modified or set aside in the same manner and within the same time provided by statute for other orders. The order shall become final upon service. Mailing of the complaint and decision containing the agreed-to order to the proposed respondent's address as stated in this agreement shall constitute service. Proposed respondent waives any right he may have to any other manner of service. The complaint may be used in construing the terms of the order.

8. Proposed respondent has read the proposed complaint and order contemplated hereby, and understands that once the order has been issued, he will be required to file one or more compliance reports showing that he has fully complied with the order and that he may be liable for a civil penalty as provided by law for each violation of the order after it becomes final.

Order

I

It is ordered, That respondent Harvey Glass, M.D., individually and through any corporate entity over which he now or hereafter exercises control, and his corporate successors and assigns, in connection with the endorsing, adverstising, offering for sale, sale, or distribution of all products, forthwith cease and desist from:

A. Representing, directly or indirectly, through advertisements in or affecting commerce, as "commerce" is defined in the Federal Trade Commission Act, that:

1. Use of "Acne Lotion 22" and/or "Acne Masque," either alone or as part of the "Home Acne Kit," or any other acne product or regimen, will cure acne or any skin condition associated with acne;

2. "Acne Lotion 22" and/or "Acne Masque," or any chemically similar formulations, either alone or as part of the "Home Acne Kit," can penetrate the pores of the skin to eliminate the bacteria contributively responsible for acne, pimples, blackheads, whiteheads, and other acne blemishes;

3. The bacteria contributively responsible for acne can be flushed out of the pores of the skin and/or easily eliminated from the skin surface.

B. Representing directly or indirectly through advertisements in or affecting commerce, as "commerce" is defined in the Federal Trade Commission Act, that:

1. Use of "Acne Lotion 22" and/or "Acne Masque," either alone or as part of the "Home Acne Kit," or any other acne product or regimen, will result in skin free of pimples, blackheads, whiteheads, other blemishes associated with acne and scarring, regardless of the severity of the disease;

2. "Acne Lotion 22" and/or "Acne Masque," either alone or as part of the "Home Acne Kit," or any other acne product or regimen are superior to all prescription and/or over-the-counter acne preparations in the treatment of acne;

3. The "Home Acne Kit" or any other acne product or regimen is superior in the treatment of acne to any other treatment, including but not limited to treatments offered by dermatologists other than the respondent;

4. "The Home Acne Kit" or any other acne product or regimen is efficacious in any manner in the treatment of acne, unless, at the time of each dissemination of such representation(s) respondent possesses and relies upon competent and reliable scientific or medical evidence as a reasonable basis for such representation(s). "Competent and reliable scientific or medical evidence" shall be defined as evidence in the form of at least two double-blind clinical studies which conform the accepted designs and protocols and are conducted by different persons, independently of each other. Such persons shall be dermatologists who are recognized as specialists in acne and its treatment and who are experienced in conducting such studies.

C. Disseminating or causing the dissemination of any advertisement by means of the United States mails or by any means in or affecting commerce, as "commerce" is defined in the Federal Trade Commission Act, and/or permitting or otherwise causing his endorsement to appear in any such advertisement which directly or indirectly:

1. Misrepresents the efficacy, use or the mode of performance of any "drug," "cosmetic," "device," or "food," (as these terms are defined by Section 15 of the Federal Trade Commission Act, 15 U.S.C. 55) where the use or reasonably foreseeable misuse of the product may adversely affect the health or safety of the user.

2. Misrepresents the extent to which any product has been tested or the results of any such tests.

Provided, however, That respondent shall have an affirmative defense to a compliance suit for violation of this order paragraph where respondent acted only as an endorser and neither knew nor should known that the advertisement(s) violated the order paragraph.

D. Disseminating or causing the dissemination of any advertisement by means of the United States mails or by any means in or affecting commerce, as "commerce" is defined in the Federal Trade Commission Act, and/or permitting or causing his endorsement to appear in any such advertisement, which directly or indirectly makes representations referring or relating to the performance or efficacy of any health-related product or refers or relates to any characteristic, property or result of the use of any such product, unless, at the time of each dissemination of such representation(s) respondent possesses and relies upon a reasonable basis for such representation(s).

II

It is further ordered, That respondent notify the Commission at least thirty (30) days prior to any proposed change in his business status, such as incorporation, or any other change which may affect compliance obligations arising out of this order.

It is further ordered, That respondent shall, within sixty (60) days after this order becomes final, and annually thereafter for three (3) years, file with the Commission a report, in writing, signed by respondent, setting forth in detail the manner and form of his compliance with this order.

It is further ordered, That respondent shall maintain files and records of all substantiation related to the requirements of Parts IB and ID of this order for a period of three (3) years after the dissemination of any advertisement which relates to that portion of the order. Additionally, such materials shall be made available to the Federal Trade Commission or its staff within fifteen (15) days of a written request for such materials.

Analysis of Proposed Consent To Aid Public Comment

The Federal Trade Commission has provisionally accepted an agreement to a proposed consent order from Harvey Glass, M.D.

The proposed consent order has been placed on the public record for sixty (60) days for reception of comments by interested persons. Comments received during this period will become part of the public record. After sixty (60) days, the Commission will again review the agreement and the comments received and will decide whether it should withdraw from the agreement or make final the agreement's proposed order.

The complaint charges the respondent with providing an endorsement, as a medical expert, of several acne preparations: Acne-Lotion 22, Acne Masque and the Home Acne Kit. The complaint alleges that respondent's endorsement contains several false or misleading representations that said products: (1) Will cure acne regardless of the severity of the conditions, resulting in a skin free of pimples and other clinical manifestations of acne including scarring; (2) can penetrate the pores of the skin to eliminate the bacteria responsible for acne; (3) are medically and scientifically tested and proved effective; (4) are superior to all prescriptions and over-the-counter acne preparations, and treatment for acne offered by dermatologists; and (5) will cause the bacteria responsible for acne to be flushed out of the pores of the skin to the skin surface where the bacteria can be easily eliminated.

The consent order contains the following provisions designed to remedy the advertising violations charged.

Parts IA(1)–(3) prohibit representations that said products or any acne products will cure acne; that said products can penetrate the pores of

the skin to eliminate the bacteria responsible for acne; and that the bacteria responsible for acne can be flushed out of the pores of the skin and/or easily eliminated from the skin surface.

Part IB defines the scientific and medical evidence necessary as a reasonable basis for any claim that any acne product or regimen will result in a skin free of acne blemishes; is superior to prescription or over-the-counter acne products or treatment by dermatologists; and is efficacious in any manner for the treatment of acne.

Part IC prohibits (1) any misrepresentation of the efficacy, use of mode of performance of any food, drug, cosmetic or medical devise where the foreseeable misuse of the product may affect the health or safety of the user; and (2) any misrepresentation regarding the extent to which a product has been tested or the results of any such tests in any advertisement the respondent disseminates or causes to be disseminated or any endorsement by respondent which respondent permits or causes to appear in any advertisement. The respondent has an affirmative defense to this part, if he proves he acted only as an endorser and neither nor should have known that an advertising representation violated this part of the order.

Part ID of the order requires respondent to have a reasonable basis at the time of each dissemination of any representation relating to any characteristic or property, or the performance of efficacy of any health-related product in any advertisement or endorsement which respondent causes to be disseminated.

Part II obligates respondent to notify the Commission at least thirty (30) days prior to any proposed change in his business status which may affect compliance with this order; file an initial compliance report within sixty (60) days of the effective date of the order; and maintain records of all substantiation related to the requirements of Part IB and ID of this order for three (3) years after the first dissemination of any advertisement which relates to that portion of the order and make such records available to the staff of the Federal Trade Commission within fifteen (15) days of a written request for such material.

The purpose of this analysis is to facilitate public comment on the proposed order and it is not intended to constitute an official interpretation of the agreement and proposed order or to modify in any way their terms.

Carol M. Thomas,
Secretary.

[FR. Doc. 79-31295 Filed 10-9-79; 8:45 am]
BILLING CODE 6750-01-M

16 CFR Part 13

[File No. 792 3023]

San-Mar Laboratories, Inc., et al.; Consent Agreement with Analysis To Aid Public Comment

AGENCY: Federal Trade Commission.

ACTION: Consent agreement.

SUMMARY: In settlement of alleged violations of federal law prohibiting unfair acts and practices and unfair methods of competition, this consent order, accepted subject to final Commission approval, among other things, would require two Elmsford, N.Y. firms and their corporate president, engaged in the manufacture and marketing of "Acne Lotion 22," the "Acne Masque," and the "Home Acne Kit," to cease disseminating advertisements which represent that their acne products can cure acne or eliminate bacteria-caused skin blemishes; or which misrepresent or make unsubstantiated claims regarding the superiority, efficacy and performance of their products; the extent to which their products have been tested; and the results of the tests. Purchasers of acne products would have to be informed of their right to request and receive refunds; and the firms would be required to honor refund requests in a timely manner. Additionally, the firms would be required to maintain specified records for a period of three years.

DATE: Comments must be received on or before December 10, 1979.

ADDRESS: Comments should be directed to: Office of the Secretary, Federal Trade Commission, 6th St. and Pennsylvania Ave., N.W., Washington, D.C. 20580.

FOR FURTHER INFORMATION CONTACT: FTC/P, Albert H. Kramer, Washington, D.C. 20580. (202) 523-3727.

SUPPLEMENTARY INFORMATION: Pursuant to Section 6(f) of the Federal Trade Commission Act, 38 Stat. 721, 15 U.S.C. 46 and § 2.34 of the Commission's rules of practice (16 CFR 2.34), notice is hereby given that the following consent agreement containing a consent order to cease and desist and an explanation thereof, having been filed with and accepted, subject to final approval, by the Commission, has been placed on the public record for a period of sixty (60) days. Public comment is invited. Such comments or views will be considered by the Commission and will be available for inspection and copying at its principal office in accordance with § 4.9(b)(14) of the Commission's rules of practice (16 CFR 4.9(b)(14)).

[File No. 792 3023]

San-Mar Laboratories, Inc. et al.; Agreement Containing Consent Order To Cease and Desist

In the matter of San-Mar Laboratories, Inc., a corporation, Maison Drug Company, Inc., a corporation, and Marvin Berkrot, individually and as corporate president.

The Federal Trade Commission having initiated an investigation of certain acts and practices of San-Mar Laboratories, Inc., and Maison Drug Company, Inc., corporations, and Marvin Berkrot, individually and as corporate officer, sometimes hereinafter referred to as respondents, and it now appearing that proposed respondents are willing to enter into an agreement containing an order to cease and desist from the use of acts and practices being investigated;

It is hereby agreed by and between the said proposed respondents and their attorney, and counsel for the Federal Trade Commission that:

1. Proposed respondents San-Mar Laboratories, Inc., and Maison Drug Company, Inc., are corporations organized, existing, and doing business under and by virtue of the laws of the State of New York, with their principal offices and places of business at 399 Executive Boulevard, Elmsford, New York 10523.

2. Proposed respondent Marvin Berkrot is an individual and corporate officer of San-Mar Laboratories, Inc., and Maison Drug Company, Inc., and maintains an office at 399 Executive Boulevard, Elmsford, New York 10523.

3. Proposed repondents admit all the jurisdictional facts set forth in the draft of complaint here attached.

4. Proposed respondents waive:

(a) Any further procedural steps;

(b) The requirement that the Commission's decision contain a statement of findings of fact and conclusions of law; and

(c) All rights to seek judicial review or otherwise to challenge or contest the validity of the order entered pursuant to this agreement.

5. This agreement shall not become a part of the official record of the proceedings unless and until it is

accepted by the Commission. If this agreement is accepted by the Commission, it, together with the draft of complaint contemplated thereby, will be placed on the public record for a period of sixty (60) days and information in respect thereto publicly released; and such acceptance may be withdrawn by the Commission if comments or views submitted to the Commission disclose facts or considerations which indicate that the order contained in the agreement is inappropriate, improper, or inadequate.

6. No agreement, understanding, representation, or interpretation not contained in the order or the agreement may be used to vary or contradict the terms of the order.

7. This agreement is for settlement purposes only and does not constitute an admission by proposed respondents that the law has been violated or that any of the facts are true as alleged in the draft of the complaint here attached.

8. This agreement contemplates that, if it is accepted by the Commission, and if such acceptance is not subsequently withdrawn by the Commision pursuant to the provisions of § 2.34(b) of the Commission's rules, the Commission may, without further notice to proposed respondents, (1) issue its complaint corresponding in form and substance with the draft of complaint here attached and its decision containing the following order to cease and desist in disposition of the proceeding and (2) make information public in respect thereto. When so entered, the order to cease and desist shall have the same force and effect and shall become final and may be altered, modified or set aside in the same manner and within the same time provided by statute for other orders. The order shall become final upon service. Mailing of the complaint and decision containing the agreed-to order to the proposed respondents' addresses as stated in this agreement shall constitute service. Proposed respondents waive any right they may have to any other manner of service. The complaint may be used in construing the terms of the order.

9. Proposed respondents have read the proposed complaint and order contemplated hereby, and understand that once the order has been issued, they will be required to file one or more compliance reports showing that they have fully complied with the order, and that they may be liable for a civil penalty as provided by law for each violation of the order after it becomes final.

Order

I

It is ordered, That respondents San-Mar Laboratories, Inc. and Maison Drug Company, Inc., corporations, and Marvin Berkrot, individually and as a corporate officer, their successors and assigns, either jointly or individually, and the corporate respondents' officers, agents, representatives, and employees, directly or through any corporation, division or other device, in connection with the advertising, offering for sale, sale or distribution of all products do forthwith cease and desist from:

A. Disseminating or causing the dissemination of any advertisements by means of the United States mails or by any means in or affecting commerce, as "commerce" is defined in the Federal Trade Commission Act, which directly or indirectly:

1. Represents that use of "Acne Lotion 22" and/or "Acne Masque," either alone or as part of "the Home Acne Kit," or any other acne product or regimen will cure acne.

2. Represents that "Acne Lotion 22" and/or "Acne Masque," or any chemically similar formulations, either alone or as part of "the Home Acne Kit," can penetrate the pores of the skin to eliminate the bacteria contributively responsible for acne, pimples, blackheads, whiteheads, and other acne blemishes.

3. Represents that the bacteria contributively responsible for acne can be flushed out of the pores of the skin and/or easily eliminated from the skin surface.

4. Misrepresents the efficacy, use or the mode of performance of any drug where the use or reasonably foreseeable misuse of the drug may affect the health or safety of the user.

5. Misrepresents the extent to which any product has been tested or the results of any such tests.

B. Disseminating or causing the dissemination of any advertisements by means of the United States mails or by any means in or affecting commerce, as "commerce" is defined in the Federal Trade Commission Act, which directly or indirectly:

1. Represents that use of "Acne Lotion 22" and/or "Acne Masque," either alone or as part of the "Home Acne Kit," or any other acne product or regimen, will result in skin free of pimples, blackheads, whiteheads or other blemishes associated with acne and scarring, regardless of the severity of the disease;

2. Represents that "Acne Lotion 22" and/or "Acne Masque," either alone or as part of "the Home Acne Kit," or any part acne product or regimen, are superior to all prescription and/or over-the-counter acne preparations in the treatment of acne;

3. Represents that "the Home Acne Kit," or any other acne product or regimen, is superior in the treatment of acne to any other treatment, including but not limited to treatments offered by dermatologists other than Dr. Harvey Glass;

4. Represents that "the Home Acne Kit," or any other acne product or regimen, is efficacious in any manner in the treatment of acne,

unless, at the time of each dissemination of such representation(s) respondents possess and rely upon competent and reliable scientific or medical evidence as a reasonable basis for such representation(s). "Competent and reliable scientific or medical evidence" shall be defined as evidence in the form of at least two double-blind clinical studies which conform to accepted designs and protocols and are conducted by different persons, independently of each other. Such persons shall be dermatologists who are recognized as specialists in acne and its treatment and who are experienced in conducting such studies.

C. Disseminating or causing the dissemination of any advertisement by means of the United States mails or by any means in or affecting commerce, as "commerce" is defined in the Federal Trade Commission Act, which directly or indirectly makes representations referring or relating to the performance or efficacy of any product or refers or relates to any characteristic, property or result of the use of any product, unless, at the time of each dissemination of such representation(s) respondents possess and rely upon a reasonable basis for such representation(s).

It is further ordered, That respondents shall:

A. Within thirty (30) days after entry of this order notify each purchaser of one or more orders of the Special Home Acne Kit, who has not received nor is in the process of receiving a full refund on their purchase prior to that time, of the purchaser's right to a refund in the amount of the full purchase price excluding the cost of mailing. Said notice shall be in the form of a letter identical in form, language and content to that annexed hereto as Attachment A (hereinafter "the notice"). The notice shall be sent to said purchasers by first class mail, and shall not include any other written matter which would obscure its clear meaning, nor any solicitation for respondents' products.

B. Refund the full purchase price of the Special Home Acne Kit, excluding the cost of mailing, by check, to any purchaser who responds to the notice within ten (10) weeks of its mailing. Such refunds shall be mailed to purchasers who request refunds no later than fourteen (14) weeks after the notice is sent to said purchasers.

C. Proof of compliance with this section shall be sent to the Commission by registered mail upon completion of the processing of all refund requests made pursuant to the notice. Said proof shall include all refund requests by purchasers made pursuant to the notice, and such records as will show full payment to these purchasers.

It is further ordered, That respondents shall forthwith distribute a copy of this order to each of their operating divisions.

It is further ordered, That each respondent notify the Commission at least thirty (30) days prior to any proposed change in the corporate respondent such as dissolution, assignment or sale resulting in the emergence of a successor corporation, the creation or dissolution of subsidiaries, or any other change in the corporation which may affect compliance obligations arising out of this order.

It is further ordered, That each respondent shall, within sixty (60) days after this order becomes final, and one (1) year thereafter file with the Commission a report in writing, signed by respondent, setting forth in detail the manner and form of its compliance with this order.

It is further ordered, That each respondent shall maintain files and records of all substantiation related to the requirements of Parts IB and IC of this order for a period of three (3) years after the dissimination of an advertisement which related to that portion of the order. Additionally such materials shall be made available to the Federal Trade Commission or its staff within fifteen (15) days of a written request for such materials.

Attachment A

(Maison Drug Company Letterhead)

Dear Customer: According to our records, you have purchased our Special Home Acne Treatment Kit, consisting of Special Lotion 22, Protein Therapy Masque, and a booklet on acne.

The Federal Trade Commission has recently brought to our attention certain questions about advertising claims we made for the Special Home Acne Treatment Kit.

We have agreed with the Commission to make sure that all our customers who purchased the Special Home Acne Kit are satisfied that it performed as they expected it would, and to refund the full purchase price to customers who may have not been satisfied.

If you choose to request a refund because of dissatisfaction with the products, submit proof of purchase (check or money order will do) and we will remit payment. You must complete the form below and return it no later than . Please allow fourteen (14) weeks from receipt for processing of your refund request.

Sincerely yours,

Marvin Berkrot, President

Maison Drug Company

(cut along line)

Dear Mr. Berkrot:

I was not satisfied that the Special Home Acne Kit performed as I expected it would. I purchased —— (insert number of Kits you bought) Kits. I enclose herewith proof of purchase.

My full name and address is:

Maison Drug Company

Name: _____

Address: _____

Street Apt. No.

City State Zip

Signature: _____

After you have completed this form, send it to:

Marvin Berkrot, President, Maison Drug Company, 399 Executive Boulevard, Elmsford, New York 10523.

Analysis of Proposed Consent To Aid Public Comment

The Federal Trade Commission has provisionally accepted an agreement to a proposed consent order from San-Mar Laboratories, Inc., Maison Drug Company, Inc., and Marvin Berkrot.

The proposed consent order has been placed on the public record for sixty (60) days for reception of comments by interested persons. Comments received during this period will become part of the public record. After sixty (60) days, the Commission will again review the agreement and the comments received and will decide whether it should withdraw from the agreement or make final agreement's proposed order.

The complaint charges the respondents with disseminating and causing the dissemination of advertisements containing several false and misleading representations regarding several acne preparations; Acne Lotion 22, Acne Masque and the Home Acne Kit. The complaint alleges that the advertisements falsely and/or unfairly claim that said products: (1) Will cure acne regardless of the severity of the condition, resulting in skin free of pimples and other clinical manifestations of acne including scarring; (2) can penetrate the pores of the skin to eliminate the bacteria responsible for acne; (3) are medically and scientifically tested and proved effective; (4) are superior to all prescription and over-the-counter acne preparations, and treatments for acne offered by dermatologists; and (5) will cause the bacteria responsible for acne to be flushed out of the pores of the skin to the skin surface where the bacteria can be easily eliminated.

The consent order contains the following provisions designed to remedy the advertising violations charged.

Part IA(1)–(3) prohibit representations that said products or any acne products will cure acne; that said products can penetrate the pores of the skin to eliminate the bacteria responsible for acne; and that the bacteria responsible for acne can be flushed out of the pores of the skin and/or easily eliminated from the skin surface. Parts IA(4)–(5) prohibit misrepresentations of the efficacy, use or mode of performance of any drug where the foreseeable misuse of the product may affect the health or safety of the user; misrepresentations regarding the extent to which a product has been tested or the results of any such tests.

Part IB defines the scientific and medical evidence necessary as a reasonable basis for any claims that: any acne product or regimen will result in a skin free of acne blemishes; is superior to prescription or over-the-counter acne products or treatments by dermatologists; and is efficacious in any manner for the treatment of acne.

Part IC of the order requires respondents to have a reasonable basis at the time of each dissemination of any representation relating to any characteristic or property, or the performance or efficacy of any health-related product in any advertisement or endorsement which respondent causes to be disseminated.

Part II requires respondents to send out the letter attached to the order, to all purchasers, informing them of the availability of refunds, if they act within ten (10) weeks. Within fourteen (14) weeks of notification, respondents shall send refunds to those purchasers who respond to the notice, and send proof of compliance with this return to the Commission.

Part III obligates the respondents to notify the Commission at least thirty (30) days prior to any proposed change in their business status which may affect compliance with this order; file an initial compliance report within sixty (60) days of the effective date of the order; and maintain records of all substantiation related to the requirements of Parts IB and ID of this order for three (3) years after the first dissemination of any advertisement which relates to that

portion of the order and make such records available to the staff of the Federal Trade Commission within fifteen (15) days of a written request for such material.

The purpose of this analysis is to facilitate public comment on the proposed order and it is not intended to constitute an official interpretation of the agreement and proposed order or to modify in any way their terms.

Carol M. Thomas,
Secretary.

[FR Doc. 79-31296 Filed 10-9-79; 8:45 am]
BILLING CODE 6750-01-M

SECURITIES AND EXCHANGE COMMISSION

17 CFR Part 270

[Release No. IC-10886, File No. S7-803]

Mergers and Consolidations Involving Registered Investment Companies

AGENCY: Securities and Exchange Commission.

ACTION: Proposed rules.

SUMMARY: The Commission today is releasing for public comment a series of proposed rules which would exempt specified mergers or consolidations of registered investment companies from certain prohibitions under the Investment Company Act of 1940. A proposed rule among this series would exempt certain mergers or consolidations of affiliated registered investment companies from the act's prohibition against sales and purchases of property between affiliated persons. Two proposed rules would permit the sale of redeemable securities at a price other than a current public offering price described in the prospectus, if the sale is in connection with specified mergers, consolidations or offers of exchange involving a registered investment company. Another proposed rule in this series would permit the sale of redeemable securities at a price based upon an adjusted current net asset value in certain transactions regarding which an investment company's directors have made certain findings protective of existing shareholders' interests. Finally, a proposed rule would permit an investment adviser to bear expenses of a merger or consolidation involving a registered investment company. These proposed rules are intended to eliminate the need for parties' seeking exemptions for and the Commission's reviewing such transactions on a case-by-case base through the application process.

DATE: Comments must be received by November 30, 1979.

ADDRESSES: Send comments in triplicate to George A. Fitzsimmons, Secretary, Securities and Exchange Commission, Washington, D.C. 20549. (Refer to File No. S7-803.) All comments received will be available for public inspection and copying in the Commission's Public Reference Room, 1100 L Street, N.W., Washington, D.C. 20549.

FOR FURTHER INFORMATION CONTACT: Joseph F. Mazzela, Esq., (202) 272-2033, or Paul Goldman, Financial Analyst, (202) 272-2114, Investment Company Act Study Group, Division of Investment Management, Securities and Exchange Commission, 500 North Capitol Street, Washington, D.C. 20549.

SUPPLEMENTARY INFORMATION: The Commission today is publishing for comment a series of proposed rules under the Investment Company Act of 1940 [15 U.S.C. 80a-1 et seq.] ("Act") to permit specified mergers ad consolidations involving registered investment companies without their having to obtain from the Commission exeptive orders under various provisions of the Act and rules promulgated thereunder. Among the Commission's proposals, proposed rule 17a-8 would permit certain affiliated investment companies to merge or consolidate. Proposed Rule 22d-4 would allow the sale of redeemable securities of a registered investment company at a price other than the current public offering price described in the prospectus in connection with a merger of the registered investment company with a "private investment company"—that is, a company which is excluded from the statutory definition of "investment company" by section 3(c)(1) of the Act [15 U.S.C. 80a-3(c)(1)]. Proposed rule 22d-5 would extend to offers of exchange between a registered open-end investment company and a registered closed-end investment company the exemption from section 22(d) of the Act [15 U.S.C. 80a-22(d)] presently available only to such transactions between two registered open-end investment companies. A proposed amendment to rule 22c-1 [17 CFR § 270.22c-1] would deem certain sales of redeemable shares made in connection with specified mergers or consolidations to comply with the rule. Finally, proposed amended rule 17d-1(d)(8) [17 CFR § 27.17d-1(d)(8)] would allow an investment adviser to bear expenses associated with a merger or consolidation of investment companies. These proposed rules were developed by the Division of Investment Management's Investment Company Act Study Group in the context of its re-examination of the regulation of investment companies.

Introduction

From time-to-time a registered investment company may determine [1] to enter into a merger transaction with another investment company.[2] This is usually accomplished pursuant to a plan of reorganization under which substantially all of the assets of one investment company are transferred in exchange for shares of the other. The investment company receiving the shares, in turn, distributes them to its shareholders as a liquidating dividend. The number of shares exchanged for the assets of the liquidating investment company typically is determined on the basis of the relative net asset values of the participating investment companies so that the interests of existing shareholders of either investment company are not diluted. However, in some instances, this formula may be adjusted to compensate one investment company for assuming potential liabilities [3] of the other investment company or for extraordinary expenses anticipated as a result of the merger or consolidation.[4] Such an adjustment

[1] Applications for exemptive orders regarding such transactions typically have asserted that particular mergers or consolidations would result in operational economies, such as by eliminating duplicative administrative, accounting and personnel costs. See, e.g., Anchor Reserve Fund, Inc., Investment Company Act Release No. 9545 (Nov. 30, 1976), 11 SEC Docket 1099; and Stock Fund of America, Inc., Investment Company Act Release No. 9289 (May 13, 1976), 9 SEC Docket 658. Additionally, certain applications have asserted that investors would benefit by spreading the remaining expense over a larger asset base. See, e.g., Charter Fund, Inc., Investment Company Act Release No. 9631 (Feb. 3, 1977), 11 SEC Docket 1658.

[2] For purposes of this release, all such transactions will be referred to as mergers even though they may take the form of consolidations or sale-of-assets under state corporation law or qualify for nonrecognition under the Internal Revenue Code of 1954, as amended, other than under section 368(a)(1)(A). While there may be substantially persuasive corporate tax, business accounting, Federal securities law, and state corporate law reasons for entering into this type of transaction as other than a statutory merger, those aspects of the transaction do not appear to raise significant analytical differences under the relevant regulatory provisions of the Act.

[3] Many liabilities such as outstanding liquid debts already would be reflected in the balance sheet of the investment company whose assets are being acquired, and, therefore, have already served to lessen the aggregate value of the assets to be transferred. Nonetheless, certain potential liabilities, including potential tax liabilities relating to the transferred assets, may not be reflected in the balance sheet.

[4] These expenses may include additional registration costs, brokerage expenses incurred in a necessary realignment of portfolio holdings and, in some cases, the costs of soliciting the approval of the shareholders of the investment company acquiring the assets. In many instances, these expenses are borne by the investment adviser to the investment company. See note 33, infra.

commonly takes the form of a diminished aggregate value being placed on the assets of the investment company exchanging its assets for shares, thereby effectively raising the price paid for the shares received.

I. Mergers and Consolidations of Affiliated Registered Investment Companies

Background

Section 17(a) of the Act [15 U.S.C. 80a-17(a)], generally, prohibits any investment company from selling to or purchasing from an affiliated person of that investment company (or any affiliated person of such a person) any security or other property.[5] By virtue of having in common an investment adviser, directors, and/or officers, investment companies may be considered to be under common control and, therefore, affiliated persons of each other.[5] A merger involving the exchange of substantially all the assets of one investment company for shares of an affiliated investment company may be deemed to be a purchase or sale of those assets within the purview of section 17(a) of the Act.[6] Nonetheless, pursuant to its authority under section 17(b) of the Act [15 U.S.C. 80a-17(b)], the Commission has exempted numerous such transactions from the prohibitions of section 17(a), when it has determined that the statutory standards, including that the terms of the transaction are reasonable and fair and do not involve overreaching on the part of any person concerned, have been satisfied.[7]

Discussion

While the Act does not specifically establish standards for effecting a merger of investment companies, such a transaction between affiliated investment companies would be prohibited by section 17(a) unless the Commission grants an order of exemption pursuant to section 17(b). Section 17(a) was designed to protect shareholders by prohibiting a purchase or sale transaction when a party to the transaction has both the ability and the pecuniary incentive to influence the actions of the investment company.[8] When a merger involves investment companies which are affiliated persons exclusively by virtue of having a common investment adviser, directors and/or officers, no person who is responsible for evaluating and approving the terms of the transaction on behalf of the various participating investment companies would have a significant personal financial interest in improperly influencing these terms.[9]

Nonetheless, the Commission recognizes that, while such persons may not always have a significant personal financial interest in the specific terms pursuant to which such a transaction is effected, the investment adviser may have a significant self-interest in the decision whether the affiliated investment companies should participate in a particular merger.[10] Therefore, the Commission believes that an exemptive rulemaking pertaining to such transactions should be conditioned upon the board of directors, including a majority of specified disinterested directors,[11] of each participating investment company making certain determinations to ensure that the interests of the investment companies and their shareholders regarding such a transaction are not compromised. To protect investment company shareholders from bearing the costs of such a transaction where the greater benefit accrues to any other person, the proposed rule also requires the directors to find that no dilution of these shareholders' financial interests will result.[12] These procedures, established in the context of an exemptive rulemaking, would accord with the Act's statutorily mandated procedures for directors to monitor and approve the investment advisory contract relationship.[13]

Proposed Rule 17a-8

Proposed rule 17a-8 would exempt from the prohibitions of section 17(a) of the Act a merger or consolidation of registered investment companies which are affiliated persons solely by reason of having a common investment adviser, directors and/or officers, provided that certain conditions are satisfied.[14]

---

[5] Section 2(a)(3) of the Act [15 U.S.C. 80a-2(a)(3)] defines an "affiliated person" of another person to be, in part, any person directly or indirectly controlling, controlled by, or under common control with, such other person. An investment company is usually "controlled" by its investment adviser. "Only in the very rare case where the adviser's role is simply that of advising others who may or may not elect to be guided by his advice. can the adviser realistically be deemed not in control." Steadman Security Corp., Investment Company Act Release No. 9830 (June 29, 1977) at note 81, 12 SEC Docket 1041, *appeal pending*, 77-2415 (C.A. 5 1977).

[6] See E.I. duPont de Nemours and Company, 34 SEC 531, 534-35 (1953); and Talley Industries, Inc., Investment Company Act Release No 5953 (Jan. 9, 1970).

[7] The Commission's study which led to the Act devoted significant attention to investment company mergers. Report of the Securities and Exchange Commission on Investment Trusts and Investment Companies, Part III, Chapter IV, Part V, H.R. Doc. No. 279, 76th Cong. (1939). Moreover, the bill proposing legislation to regulate investment companies authorized the Commission's reviewing substantively the terms of all investment company reorganizations, including mergers. A Bill to Provide for the Registration and Regulation of Investment Companies and Investment Advisers and for other purposes: Hearings on S. 3580 Before a Subcommittee of the Senate Committee on Banking and Currency, 76th Cong., 3d Sess., at 17 (1940) ("Hearings on S. 3580"). As enacted, section 25 of the Act [15 U.S.C. 80a-25] authorizes the Commission (1) under specified circumstances to render an advisory report with respect to any such plan and its effect upon any class or classes of securityholders, and (2) to institute proceedings in certain United States District Courts to enjoin the consummation of any plan of reorganization. No special reference is made in the Commission's Report or in section 25 of the Act to mergers or consolidations among investment companies who are affiliated persons solely by virtue of having common investment advisers, directors or officers. In large part, section 25 reflects a Congressional concern that investment company shareholders were not fully informed of the material aspects of an investment company merger and that, as a result of relatively small individual holdings, they did not have effective legal remedies to respond to an unfair transaction.

[8] Hearings on S. 3580, note 7, supra, at 256-59 (testimony by David Schenker, Chief Counsel of the Commission's Investment Trust Study).

[9] In contrast, when a participating investment company is an affiliated person, or an affiliated person of an affiliated person, of any other participating investment company by virtue of a person's owning 5% or more of the outstanding voting securities of one or more such companies, the proposed rule would not apply. In such instances, the owner of such securities would be presumed to have certain potential abilities to influence the terms of such a transaction in which—depending on his relative security holdings in the participating investment companies—he may have a particular financial interest. Accordingly, the Commission believes that such transactions should continue to be subject to specific scrutiny under the Act's exemptive application process. See also Investment Company Act Release No. 10828 (Aug. 13, 1979), 18 SEC Docket 122, 44 FR 48657 (1979) (adoption of amendments to 17 CFR § 270.17a-8 respecting transactions with portfolio affiliates).

[10] For example, the investment adviser may experience certain economies in serving a single merged or consolidated investment company compared to serving two or more separate companies. These economies may be particularly significant when the investment adviser would otherwise exceed particular expense limitation undertakings, resulting in diminished investment advisory fees or even the necessity to compensate the investment companies.

[11] The term "disinterested directors" is a common reference to directors who are not interested persons as defined in section 2(a)(19) [15 U.S.C. 80a-2(a)(19)] of the Act.

[12] If the investment adviser to the investment company were to bear the expenses of merger transactions where there was a relatively small benefit to the investment company and a relatively large benefit to the investment adviser, this would, in large part, mitigate the danger of unfair dilution of shareholder interests. See proposed rule 17d-1(d)(8) and accompanying text infra part IV.

[13] See, e.g., section 15(c) [15 U.S.C. 80a-15(c)] (procedures for approving investment advisory contracts). See also section 36(b)(3) [15 U.S.C. 80a-35(b)(3)] (with respect to certain actions for breach of fiduciary duty in respect of compensation or payments, approval by the board of directors shall be given such consideration by the court as is deemed appropriate under all the circumstances).

[14] The proposed rule would exempt merger transactions among affiliated registered investment companies only. It would not apply, for example, to a transaction involving a company which is not registered under the Act, such as a "private investment company" described in section 3(c)(1) [15 U.S.C. 80a-3(c)(1)]. However, should such transactions begin to occur frequently the

Footnotes continued on next page

In order to obviate any concern that the transaction would be effected primarily to benefit any person other than the participating investment companies, the proposed rule would require the board of directors of each affiliated investment company [15] participating in the merger or consolidation—including a majority of the directors who are not interested persons of any participating investment company—to determine that the transaction (1) is in the best interests of the investment company; and (2) will not result in diluting the financial participation of any investment company shareholder.[16] In making the findings, directors should consider all information which would be material to the determination—such as the compatibility of the participating companies' investment objectives, policies, restrictions and portfolios,[17] the terms and conditions of the transaction which affect the price of the shares to be exchanged,[18] and any other direct or indirect costs to be incurred by the investment company as a result of the transaction.[19]

Finally, the proposed rule is conditioned upon the directors' making a record in the company minute books which fully and clearly describes both the required directors' findings and the basis upon which such findings were made. Such records, which are based on good corporate practices, would be necessary and appropriate to the satisfactory execution of the Commission's investment company inspection and examination program.

II. Merger of a Registered Investment Company with Private Investment Company

Background

Section 22(d) [15 U.S.C. 80a-22(d)] of the Act requires, generally, that redeemable securities issued by registered investment companies be sold only at a current public offering price described in the prospectus.[20] This section, in effect, mandates that such shares be sold either at their net asset value, or, in the case of an investment company charging a sales load, at net asset value plus a sales charge. A registered investment company may seek to enter into a merger with a "private investment company"—that is, a company which is excluded from the statutory definition of "investment company" by section 3(c)(1) [15 U.S.C. 80a-3(c)(1)] ("private investment company").[21] However, the sale of redeemable securities of a registered investment company to a private investment company pursuant to a merger would be prohibited by section 22(d) of the Act if either (a) the net asset value of the investment company's securities to be sold pursuant to the transaction is to be adjusted as a result of any potential liabilities that it would assume therein, or (b) the sales charges normally connected with sales of such securities are reduced or eliminated.

Discussion

The purposes of section 22(d) of the Act include (1) preventing any dilution of the interests of existing investment company shareholders as a consequence of the sale of redeemable securities at less than their net asset value, and (2) prohibiting unfair discrimination in the sales charges applied to purchases of such securities.[22] The Commission, upon application, has granted numerous orders exempting mergers of private investment companies with registered investment companies—even though such transactions may result in the sale of the investment company's securities at a price other than a price described in the prospectus—when the transactions were nonetheless consistent with these legislative purposes.[23]

Footnotes continued from last page

Commission then will consider whether those transactions would merit consideration as a separate subject for rulemaking.

[15] In the event that an investment company which is not an affiliated person, or an affiliated person of an affiliated person, of other participating investment companies also participate in the merger, the rule would not require that its board of directors make any particular findings. Investors in such an investment company should be adequately protected by the investment company's lack of affiliation with other participating parties in the transaction and the arms-length bargaining that should prevail in negotiating the terms of the proposed transaction.

[16] To the extent the participating investment companies share common directors, the shareholders of each investment company are entitled as a matter of fundamental fiduciary principles inherent in the standard of care and duties of loyalty imposed by section 36(a) of the Act [15 U.S.C. 80a-35(a)] to have their directors determine whether a merger or consolidation is in the best interest of each company and its shareholders.

[17] This information, in part, concerns whether any merged or consolidated company would be a suitable investment for the acquired investment company's shareholders. It would not, of course, be in the acquired investment company's shareholders' best interests for their investment company to enter into a transaction which would cause the shareholders to receive securities that would not be considered a suitable investment medium for such persons. Additionally, if the merger of the investment companies would cause either investment company to modify its portfolio holdings, the information would include whether the investment company's shareholders would have to bear significant brokerage expenses which effectively would dilute their financial participation in the resultant investment company.

[18] In the event that significant tax consequences to an investment company or its shareholders may flow from a proposed merger or consolidation, these consequences should be examined as part of that directorial consideration. Such consequences may result from sizable differences in the participating investment companies' realized or unrealized capital gains or losses and capital loss carry-forwards. However, it appears that the transfer in a merger of a capital loss carry-forward by an investment company does not result in a permanent tax saving to the shareholders of other participating companies. Rather, such a transfer solely affects the timing of the tax liability incurred by such shareholders by deferring such liability until each such shareholder redeems his or her shares; except for this tax deferral, the existence of a loss carryover to offset realized capital gains does not affect their investment. Nonetheless, an adjustment to the acquisition cost of investment company shares in a merger may be appropriate to reflect all relevant tax considerations, if the benefit to be derived from the tax advantages can be quantified based upon certain assumptions. These assumptions would include estimates of the average holding period, the average marginal tax rate, and the expected earnings rate of shareholders who would receive the benefits of such tax deferral. Moreover, in making any such adjustment any consideration of unrealized gains or losses should reflect their contingent character.

[19] In additional to direct costs, such as any expenses to be incurred in soliciting shareholders' approval of the merger transaction, directors should consider such indirect costs as (1) brokerage expenses arising from any portfolio adjustment necessitated by the transaction or (2) less favorable terms in the advisory contract to be applicable to the merged investment companies than those already in effect with the participating investment companies. For example, the transaction may result in certain shareholders paying a higher effective rate in respect to identical services or the same absolute rate of compensation while receiving lesser services. However, directors may also consider the extent to which these costs to be borne by investment company shareholders are mitigated by the favorable financial participation of the investment adviser in the costs of administering or managing the investment company, whether by reason of State law reimbursement expense limitations and concomitant expense reimbursement arrangements or agreement incident to the merger transaction.

[20] Section 22(d) of the Act, in part, provides—"No registered investment company shall sell any redeemable security issued by it to any person except . . . at a current public offering price described in the prospectus. . . . Nothing in this subsection shall prevent a sale made (i) pursuant to an offer of exchange permitted by section 11 including any offer made pursuant to section 11(b). . . ."

[21] Section 3(c)(1), in part, generally excludes from the definition of investment company—"Any issuer whose outstanding securities . . . are beneficially owned by not more than one hundred persons and which is not making and does not presently propose to make a public offering of its securities."

[22] See Hearings on S. 3580, note 7, supra, at 136.

[23] See, e.g., Wellesley Income Fund, Inc., Investment Company Act Release No. 9324 (June 17, 1976), 9 SEC Docket 914, and Investment Company Act Release No. 9359 (July 20, 1976), 10 SEC Docket 1159; Massachusetts Investors Trust, Investment Company Act Release No. 8260 (Feb. 28, 1974), 3 SEC Docket 637, and Investment Company Act Release No. 8279 (March 22, 1974), 3 SEC Docket 742; and Eberstadt Fund, Inc., Investment Company Act Release No. 7951 (Aug. 22, 1973), 2 SEC Docket 333, and Investment Company Act Release No. 7961 (Sept. 6, 1973), 2 SEC Docket 411.

A. *Potential Dilution of Existing Investors' Interests*

Pursuant to the terms of a merger, the registered investment company may assume certain potential liabilities of the private investment company or bear unusual expenses. For example, the registered investment company may assume the potential liabilities of the private investment company for the payment of certain income taxes.[24] Or, the investment company may expect to incur brokerage expenses by reason of selling certain assets received in the merger which do not conform to its portfolio requirements and thereafter purchasing more appropriate portfolio investments.[25] Assumption of such expenses by the registered investment company in a transaction otherwise effected on the basis of the relative net asset values of the participating companies may effectively dilute the interests of the existing shareholders of the investment company. Therefore, in accordance with their fiduciary obligations, a registered investment company's directors may determine that, absent an adjustment to compensate for such potential liabilities, the transaction would not be in the interest of the company or its existing shareholders.[26]

B. *Unfair Discrimination in Sales Charges*

Addtionally, directors of a registered investment company issuing redeemable securities which are sold at a price that includes a sales load may determine that the cost associated with selling such securities in the context of a merger may be less than those costs of selling securities through the normal channels of distribution.[27] Accordingly, they may determine that there are persuasive reasons for diminishing the sales load for such sales effected pursuant to a merger to reflect these economies. Because any such economies would be unique to the particular merger transaction, a sales load which would reflect these savings may not be described in the registered investment company's prospectus. Nonetheless, when the registered investment company's directors determine that a sales load less than that described in the prospectus is justified by actual economies experienced in the course of such an extraordinary transaction, imposition of this reduced load should not be considered to be inconsistent with the Congressional purposes of section 22(d), *inter alia*, unfair or arbitrary discrimination among purchasers of the registered investment company's redeemable securities.

Proposed Rule 22d-4

Proposed rule 22d-4 under the Act would permit an investment company to sell redeemable securities pursuant to a merger with a private investment company at a price other than a price described in its prospectus, provided that certain safeguards are satisfied. The proposed rule, if adopted, would eliminate the need for parties' seeking and the Commission's considering orders of exemption from the provisions of section 22(d) regarding such transactions upon application on a case-by-case basis.[28]

Paragraph (a)(1) of proposed rule 22d-4 would apply to any registered investment company, regardless of whether its shares are normally sold at a price which includes a sales load. That paragraph would require the registered investment company's directors, including a majority of its disinterested directors, to determine that the merger transaction will not result in any dilution of the interests of the registered investment company's shareholders.[29]

Paragraph (a)(2) of the proposed rule would apply only to investment companies whose securities are sold at a price which includes a sales load. It would require such directors' finding additionally that any diminution in the price charged for such securities from the otherwise applicable price described in the investment company's prospectus represents actual economies experienced in selling the securities.

Paragraph (b) of the proposed rule would establish certain recordkeeping requirements. Such records, which would comport with good corporate practices, are necessary and appropriate to the satisfactory execution of the Commission's inspection and examination program.

III. Offers of Exchange by a Registered Open-End Company to a Closed-End Company

Background

The merger of a closed-end investment company with a registered open-end investment company may involve, as a result of adjustments to net asset value or a variance from the normal sales charge, the sale of redeemable securities at a price other than the current public offering price described in the prospectus. The Commission has granted orders exempting such transactions from the strict requirements of section 22(d) of the Act.[30]

Discussion

Section 22(d) of the Act, in part, excepts from its terms a sale of redeemable securities pursuant to an offer of exchange permitted under section 11 of the Act [15 U.S.C. 80a-11], including any offer made pursuant to section 11(b).[31] The provisions of section

[24] See, note 18 supra.

[25] See, e.g., Exeter Fund, Inc., Investment Company Act Release No. 10169 (Mar. 21, 1978), 14 SEC Docket 567; and F.G. Mutual Fund, Inc., Investment Company Act Release No. 9548 (Nov. 30, 1976), 11 SEC Docket 1100.

[26] However, to the extent these potential liabilities and costs are borne by the investment adviser, such concerns would be obviated. In this regard, the Commission has herein proposed a rule which would permit an investment adviser to bear such costs without the necessity of filing an exemptive application from the provisions of section 17(d) [15 U.S.C. 80a-17(d)] and rule 17d-1 [17 CFR 270.17d-1] thereunder, regarding joint transactions among a registered investment company and an affiliated person thereof. See Part IV infra.

[27] In its effort to attract new shareholders, an investment company will usually incur substantial promotion and sales related costs which are often financed in whole, or in part, by the sales charge paid by the new investor. See, Division of Investment Management Regulation, *Mutual Fund Distribution and Section 22(d) of the Investment Company Act 1940* (August, 1974) at 30-33.

[28] See, e.g., note 23, supra.

[29] A selling price in a merger transaction which complies with the provisions of paragraph (a) of the proposed rule would be considered to be "a price based on the current net asset of such security" for purposes of rule 22c-1 under the Act [17 CFR 270.22c-1], because of the directors' finding that no such dilution would occur. See Part V infra.

In evaluating the circumstances which might cause dilution, the directors should consider whether the transaction is being used by shareholders of the private investment company as a means of subsequently redeeming their interests without experiencing the brokerage expenses which would otherwise be incurred in a liquidation of the acquired company. In this regard, the registered investment company's directors should consider whether they should request from such shareholders an undertaking that the shareholder will not redeem or tender for repurchase their securities during a specified period of time. See, e.g., Broad Street Investing Corp., Investment Company Act Release No. 7775 (Apr. 19, 1973), SEC Docket Vol. 1 No. 12; and State Street Investment Corp., Investment Company Act Release No. 9976 (Oct. 27, 1977), 13 SEC 499.

[30] See, e.g., Axe-Houghton Fund, Inc., 25 SEC 133 (1947); and General Capital Corporation, 14 SEC 761 (1943).

[31] Section 11(a) of the Act, in part, makes it unlawful for any registered open-end investment company (or principal underwriter thereof) to offer to exchange its securities for those of another registered open-end company on any basis other than the relative net asset values of the respective securities to be exchanged, unless the terms of the offer have been approved by the Commission or are in accordance with any rules or regulations promulgated by the Commission in respect to such offers. No such rules or regulations have ever been adopted. Section 11(b) of the Act excludes an offer of exchange from the prohibitions of section 11(a), if the offer is made pursuant to a plan of reorganization which requires the approval of the holders of a majority of the outstanding shares of the company to which the offer is being made. The term "reorganization" is defined in section 2(a)(33) of the Act [15 U.S.C. 80a-2(a)(3)], in part, as including "a merger or consolidation" as well as "an

Footnotes continued on next page

11 (a) and (b), and therefore the corresponding exception from the requirements of section 22(d), are applicable only to offers of exchange between two open-end investment companies. The Commission, however, has long since determined that the reasons Congress believed it was appropriate to exclude transactions which are described in section 11 from the strict requirements of section 22(d) of the Act are no less compelling with respect to an offer of exchange involving a closed-end investment company.[32] Applications for exemption from the provisions of sectin 22(d) have been granted by the Commission when, except for the fact that the offeree investment company was a closed-end company, the transaction would have been in conformance with the provisions of section 11.

Footnotes continued from last page exchange of securities (between companies) preliminary to and for the purpose of effecting or consummating (a merger, consolidation or sale of assets)."

Section 11 was enacted to discourage the creation of new investment companies for the sole purpose of "switching" investors from one fund to another in order to generate distribution fees or sales charges. See, Hearings on S. 3580, note 7, supra, at 225–27 (testomony of David Schenker, Chief Counsel, SEC Investment Trust Study). Although a transaction effected under section 11 (or the proposed rule) is not subject to the Commission's scrutiny pursuant to the application process, the standards of section 36, of course, apply.

[32] In Axe-Houghton Fund, Inc., 25 SEC 133 (1947), the Commission exercised its authority under section 6(c) of the Act [15 U.S.C. 80a–6(c)] in issuing an order of exemption from section 22(d) to permit the acquisition by a registered open-end investment company of substantially all the assets of a registered closed-end investment company in exchange for the former's shares. The Commission therein stated at 139–40:

[Section 22(d)] was not intended to apply to an extraordinary transaction in the nature of a merger or consolidation of investment companies such as is herein involved. It is to be noted that Sections 22(d) and *11(b)* of the Act taken together by their terms do not apply to a sale of all the assets of one open-end company to another open-end company where the vote of the stockholders of the selling corporation is required to effectuate the transaction. We find no rational basis of distinction between such cases and one such as this where the selling corporation is a closed-end company. [emphasis added.]

In a separate case, the Commission similarly granted an order of exemption from section 22(d) for the sale of redeemable securities to a closed-end company pursuant to an offer of exchange based on relative net asset values. Without referring to the terms of section *11(a)*, which apparently would have been met if all participating companies were open-ended, the Commission adopted reasoning analogous to that underlying section 11(a): . . . [T]here appears to be no reason in a transaction of this nature for the sale of the stock of [the Applicant] at a price equal to the current public offering price. On the contrary, the impostion of a sale load would distrub the relative net asset value basis of exchange, which the plan seeks to achieve, and consequently might introduce an element of unfairness. General Capital Corporation, note 30, supra, at 763.

Proposed Rule 22d–5

Proposed rule 22d–5 under the Act would permit redeemable securities to be sold by the issuing investment company at a price which varies from the current public offering price described in the prospectus when such sale is in connection with an exchange offer which, except for the participation of a closed-end investment company, satisfies the provisions of section 11. The proposed rule, therefore, would codify the Commission's practice of extending to mergers between registered open-end investment companies and closed-end investment companies the exclusion from the terms of section 22(d) applicable to transactions between two open-end companies.

IV. Payment of Merger Expenses by an Investment Adviser

Background

In certain mergers involving registered investment companies, the investment adviser to one or both participating companies may undertake to pay certain of the expenses incurred.[33] Because an investment adviser is defined to be an affiliated person of an investment company under the Act, the investment adviser's paying such expenses may be considered to be a joint participation with its affiliated investment company which would be prohibited under section 17(d) of the Act [15 U.S.C. 80a–17(d)] and rule 17d–1 [17 CFR § 270.17d–1] thereunder. However, the Commission upon application has issued orders exempting numerous such arrangements from those prohibitions.[34]

[33] In addition to creating goodwill or believing that its absorption of expenses attendant to the merger may be necessary to secure any necessary shareholder approval of the transaction, there may be other responsible business reasons to cause the investment adviser to decide to bear such costs. For example, the adviser may believe that it is under certain legal constraints from accepting any tangible benefits from the merger. In this regard, benefits to be received by the investment adviser as a result of the transaction may be considered to be compensation to the investment adviser for purposes of the Act. See, U.S. v. Deutsch, 451 F.2d 98, 114 (C.A. 2 1971), *cert. denied*, 404 U.S. 1019 (1972). Thus, such an arrangement also may be within the purview of section 15(a)(1) [15 U.S.C. 80a–15 (a)(1)] (investment advisory contract must precisely describe all compensation to be paid thereunder) and section 36(b) (investment adviser's fiduciary duty with respect to the receipt of compensation for services, or of payments of a material nature, paid by the investment company, or by the security holders thereof). Moreover, directors may determine that the investment adviser's bearing some or all expenses resulting from the transaction is a prerequisite to their finding that the merger or consolidation meets the standards of proposed rule 17a–8 or proposed rule 22d–4 under the Act.

[34] See, e.g., Charter Fund, Inc., Investment Company Act Release No. 9631 (Feb. 3, 1977), 11 SEC Docket 1658, and Investment Company Act Release No. 9655 (Feb. 25, 1977), 11 SEC Docket 1904; Newton Income Fund, Inc., Investment Company Act Release No. 9961 (Oct. 17, 1977), 13 SEC Docket 397, and Investment Company Act Release No. 10012 (Nov. 14, 1977), 13 SEC Docket 752; and Shearson Appreciation Fund, Inc., Investment Company Act Release No. 10110 (Feb. 1, 1978), 14 SEC Docket 87, and Investment Company Act Release No. 10151 (Mar. 6, 1978), 14 SEC Docket 409.

Discussion

In the course of a merger involving an investment company, its investment adviser may secure certain incremental financial benefits such as potentially greater fees due to an increase in the amount of assets under its management or an elimination of duplicative expenses. The investment adviser, in turn, may propose to bear expenses associated with the transaction, either directly or by reimbursing the participating investment companies. However, the payment of merger expenses of an investment company by its investment adviser may be deeded to be a joint transaction for purposes of section 17(d) of the Act and rule 17(d) of the Act and rule 17d–1 thereunder that could not be effected absent an exemptive order granted by the Commission upon application.

Section 17 and rule 17d–1 are intended generally to protect a registered investment company against conflicts of interest where the investment company participates jointly in a transaction with an affiliated person. The Commission believes that, where an investment adviser's sole participation in a merger involving an investment company is by virtue of its bearing some or all of the transactional expenses, there is little opportunity for abuse of the type section 17(d) was intended to prevent. Because the possibility of an actual conflict of interest disadvantageous to the participating investment company appears remote, the Commission believes that this area would be appropriate for exemptive rulemaking.

Proposed Amended Rule 17d–1(d)(8)

The proposed amendment of paragraph (d)(8) to rule 17d–1 under the Act would except from the application procedure of rule 17d–1 an investment adviser's bearing expenses of a merger or consolidation involving a registered investment company. As proposed, the rule would not be limited to those mergers or consolidations described in proposed rule 17a–8, proposed rule 22d–4 or proposed rule 22d–5.

V. Mergers Involving Investment Companies Effected on a Basis Other Than Relative Net Asset Values

Background

In a merger involving an investment company, the number of shares of the investment company to be exchanged for the assets of the other investment company is usually determined on the basis of the companies' relative net asset values. However, in some instances the net asset value of the "acquired" investment company exchanging its assets for shares may be adjusted to compensate the investment company receiving the assets for assuming certain potential liabilities or for anticipated expenses. Such an adjustment may cause these shares to be sold at a price other than one based on current net asset value as described in rule 22c-1 under the Act [17 CFR § 270.22c-1].

Discussion

Rule 22c-1, in part, requires that redeemable securities issued by a registered investment company be sold at a price based on current net asset value. The rule was designed, in part, to provide an accurate pricing procedure for new investors, while at the same time protecting existing shareholders from dilution resulting from the sale of redeemable securities by the investment company at a price less than the net asset value of the shares.[35] When a merger of investment companies is effected through the exchange of redeemable securities of one investment company for the assets of another investment company, an adjustment in the value of the transferred assets will cause the redeemable securities to be sold at a price other than their current net asset value.[36] However, such an adjustment may be necessary and appropriate to protect against a dilution of the value of outstanding securites of the company selling its shares and, therefore, would be consistent with the purposes of rule 22c-1. The Commission believes that it is appropriate to permit such an adjustment in certain instances where directors have examined the terms of the sale and have specifically determined that the interests of existing investment company shareholders will not be diluted by the transaction.

[35] See Investment Company Act Release No. 5519 (Oct. 16, 1968).

[36] The adjustment is, of course, intended to reflect expenses which reasonably are anticipated to be borne ultimately by the investment company selling its shares, but which, because of their still contingent nature, are not reflected in computing net asset value.

Proposed Amended Rule 22c-1

The proposed amendment to rule 22c-1 under the Act would permit the sale of redeemable securities at a price other than one based on current net asset value pursuant to a merger which meets the requirements of proposed rule 17a-8 or proposed rule 22d-4. These rules, in part, would require that an investment company's directors specifically find that the financial interests of its shareholders will not be diluted as a result of the particular merger or consolidation.[37]

Text of Proposed Rules and Proposed Amended Rules

It is proposed to amend Part 270 of Chapter II of Title 17 of the Code of Federal Regulations as follows:

1. By adding § 270.17a-8 to read as follows:

§ 270.17a-8 Mergers of certain affiliated investment companies.

A merger, consolidation, or purchase or sale of substantially all of the assets involving registered investment companies which are affiliated persons, or affiliated persons of an affiliated person, solely by reason of having a common investment adviser, common directors, and/or common officers shall be exempt from the provisions of section 17(a) of the act; *Provided*, That:

(a) The board of directors of each such affiliated registered investment company participating in the transaction, including a majority of the directors of each registered investment company who are not interested persons of any registered investment company participating in the transaction, determine:

(1) That participation in the transaction is in the best interests of that registered investment company; and

(2) That the transaction will not result in any dilution of existing shareholders' interests; and

(b) Such findings, and the basis upon which the findings were made, are recorded fully in the minute books of each registered investment company.

2. By amending § 270.17d-1 by adding paragraph (d)(8) to read as follows:

§ 270.17d-1 Applications regarding joint enterprises or arrangements and certain profit-sharing plans.

* * * * *

(d) Notwithstanding the requirements of paragraph (a) of this section, no application need be filed pursuant to this section with respect to any of the following:

* * * * *

(8) An investment adviser's bearing expenses in connection with a merger, consolidation or purchase or sale of substantially all of the assets of a company which involves a registered investment company of which it is an affiliated person.

3. By amending § 270.22c-1 by adding paragraph (a)(2) to read as follows:

§ 270.22c-1 Pricing of redeemable securities for distribution, redemption and repurchase.

(a) No registered investment company issuing any redeemable security, no person designated in such issuer's prospectus as authorized to consummate transactions in any such security, and no principal underwriter of, or dealer in, any such security shall sell, redeem, or repurchase any such security except at a price based on the current net asset value of such security which is next computed after receipt of a tender of such security for redemption or of an order to purchase or sell such security; *Provided*, That:

* * * * *

(2) This paragraph shall not prevent any registered investment company from adjusting the price of its redeemable shares sold pursuant to a merger, consolidation or purchase of substantially all of the assets of a company which meets the conditions specified in § 270.17a-8 or in § 270.22d-4.

4. By adding § 270.22d-4 as follows:

§ 270.22d-4 Sale of redeemable securities pursuant to certain mergers with private investment companies.

A sale of redeemable securities by a registered investment company shall be exempt from the provisions of section 22(d) of the act to the extent necessary to effect a merger with, or purchase of substantially all of the assets of, a company which is described in section 3(c)(1) of the act; *Provided*, That:

(a) The board of directors of the registered investment company, including a majority of the directors of such investment company who are not interested persons thereof, determine:

(1) That the interests of existing shareholders of the registered investment company will not be diluted as a result of its effecting the transaction, and

(2) In respect of a sale of redeemable securities that are described in the prospectus as having a current offering price which includes a sales load, that any reduction or elimination of such sales load represents economies

[37] The proposed rule would not affect the requirement imposed upon registered investment companies to comply with the procedures of paragraph (b) of rule 22c-1 regarding time of valuation.

experienced in such sale that would not be present in a comparable sale effected through the normal channels of distributing such securities; and

(b) Such findings, and the basis upon which the findings were made, are recorded fully in the minute books of the registered investment company.

5. By adding § 270.22d-5 as follows:

§ 270.22d-5 Exemption from section 22(d) for certain offers of exchange by certain registered investment companies.

A sale of redeemable securities pursuant to an offer of exchange which would be permitted under section 11 including any offer made pursuant to section 11(b), except that an offeree of the offer of exchange is a closed-end company, shall be exempt from the provisions of section 22(d).

(Rule 17a-8, rule 22d-4 and rule 22d-5 are proposed pursuant to section 6(c) [15 U.S.C. 80a-6(c)] and section 38(a) [15 U.S.C. 80a-37(a)] of the Act. Amended rule 17d-1 is proposed pursuant to the provisions of section 6(c), section 17(d) [15 U.S.C. 80a-17(d)] and section 38(a) of the Act. Amended rule 22c-1 is proposed pursuant to section 6(c), section 22(c) [15 U.S.C. 80a-22(c)] and section 38(a) of the Act.)

By the Commission.

George A. Fitzsimmons,

Secretary.

October 3, 1979.

[FR Doc. 79-29323 Filed 10-9-79; 8:45 am]

BILLING CODE 8010-01-M

DEPARTMENT OF THE TREASURY

Customs Service

19 CFR Part 134

Extension of Time for Comments Concerning Marking Imported Bolts, Nuts, and Rivets With Their Country of Origin

AGENCY: U.S. Customs Service, Department of the Treasury.

ACTION: Notice of extension of time for comments.

SUMMARY: This document extends the period of time permitted for the submission of comments in response to the recent proposal to delete nuts, bolts, and rivets from the list of articles that have been exempted from the country of origin marking requirements. This extension will permit the preparation and submission of more detailed comments by interested members of the public.

DATES: Comments must be received on or before November 9, 1979.

ADDRESS: Written comments (preferably in quadruplicate) should be addressed to the Commissioner of Customs, Attention: Regulations and Research Division, U.S. Customs Service, 1301 Constitution Avenue NW., Room 2335, Washington, D.C. 20229.

FOR FURTHER INFORMATION CONTACT: Samuel Orandle, Entry Procedures and Penalties Division, U.S. Customs Service, 1301 Constitution Avenue NW., Washington, D.C. 20229, (202-566-5765).

SUPPLEMENTARY INFORMATION:

Background

On August 10, 1979, the Customs Service published in the Federal Register (44 FR 47103) notice of a proposed amendment to § 134.33, Customs Regulations (19 CFR 134.33), to delete nuts, bolts, and rivets from the list of articles that have been exempted, pursuant to section 304, Tariff Act of 1930, as amended (19 U.S.C. 1304), from the country of origin marking requirements. As fully explained in that notice, the Treasury Department has received a petition which alleges that nuts, bolts, and rivets should not be exempted from the country of origin marking requirements.

Comments

The notice erroneously stated that comments concerning the proposal were to have been received on or before September 6, 1979. A notice published in the Federal Register on August 20, 1979 (44 FR 48719), correctly stated that comments concerning the proposal were to have been received on or before October 9, 1979.

However, Customs has received several requests to extend the period of time for the submission of comments in order to prepare detailed responses. Therefore, the period of time for submission of comments is extended to November 9, 1979.

Dated: October 3, 1979.

Donald W. Lewis,

Director, Office of Regulations and Rulings.

[FR Doc. 79-31259 Filed 10-9-79; 8:45 am]

BILLING CODE 4810-22-M

DEPARTMENT OF HOUSING AND URBAN DEVELOPMENT

Office of the Secretary

24 CFR Part 203

[Docket No. R-79-722]

Prepayment of Insured Single Family Mortgages

AGENCY: Department of Housing and Urban Development.

ACTION: Notice of Transmittal of Proposed Rule to Congress under Section 7(o) of the Department of HUD Act.

SUMMARY: Recently enacted legislation authorizes Congress to review certain HUD rules for fifteen (15) calendar days of continuous session of Congress prior to each such rule's publication in the Federal Register. This Notice lists and summarizes for public information a proposed rule which the Secretary is submitting to Congress for such review.

FOR FURTHER INFORMATION CONTACT: Burton Bloomberg, Director, Office of Regulations Office of General Counsel, 451 7th Street, SW. Washington, D.C. 20410 (202) 755-6207.

SUPPLEMENTARY INFORMATION: Concurrently with issuance of this Notice, the Secretary is forwarding to the Chairmen and Ranking Minority Members of both the Senate Banking, Housing and Urban Affairs Committee and the Housing Banking, Finance and Urban Affairs Committee the following rulemaking document:

24 CFR PART 203—PREPAYMENT OF INSURED SINGLE FAMILY MORTGAGES

This proposed rule would amend 24 CFR 203.558 to provide that mortgagees of insured single family mortgages may no longer require 30 days advance notice of prepayment or payment on an interest payment date. The 30-day notice and payment date rule was designed to permit the mortgage banking industry to anticipate prepayment, develop close-out balances and arrange for reinvestment of the prepaid funds. Following discussion with the industry, HUD has determined that the need for the 30-day advance notice no longer applies in today's computer age. In addition, payment in full shall be credited as of the date received. Partial prepayment, other than on an installment due date, need not be credited until the next following due date.

In addition, this proposed rule would amend 24 CFR 203.608 to relax the requirements for mortgage reinstatement.

(Sec. 7(o), Department of HUD Act, (42 U.S.C. 3535(o)), sec. 324, Housing and Community Development Amendments of 1978.)

Issued at Washington, D.C., October 2, 1979.

Moon Landrieu,

Secretary, Department of Housing and Urban Development.

[FR. Doc. 79-31255 Filed 10-9-79; 8:45 am]

BILLING CODE 4810-22-M

24 CFR Part 888

[Docket No. R-79-721]

Revised Section 8 Fair Market Rents for New Construction and Substantial Rehabilitation

AGENCY: Department of Housing and Urban Development.

ACTION: Notice of transmittal of proposed rule to Congress under section 7(o) of the Department of HUD Act.

SUMMARY: Recently enacted legislation authorizes Congress to review certain HUD rules for fifteen (15) calendar days of continuous session of Congress prior to each such rule's publication in the Federal Register. This notice lists and summarizes for public information a proposed rule which the Secretary is submitting to Congress for such review.

FOR FURTHER INFORMATION CONTACT: Burton Bloomberg, Director, Office of Regulations, Office of General Counsel, 451 7th Street, SW., Washington, D.C. 20410 (202) 755-6207.

SUPPLEMENTARY INFORMATION: Concurrently with issuance of this notice, the Secretary is forwarding to the Chairmen and Ranking Minority Members of both the Senate Banking, Housing and Urban Affairs Committee and the House Banking, Finance and Urban Affairs Committee the following rulemaking document:

PART 888—REVISED SECTION 8 FAIR MARKET RENTS FOR NEW CONSTRUCTION AND SUBSTANTIAL REHABILITATION

This proposed rule would amend the Section 8 Fair Market Rents for New Construction and Substantial Rehabilitation for all market areas. The proposed Fair Market Rents are intended to reflect changes which have occurred in the general levels of market rents for recently completed or newly constructed dwelling units in each market area since their last annual revision, which was published on July 13, 1979 and made effective as of April 1, 1979. This year it is proposed that the effective date of the Fair Market Rent schedules be changed from April 1, 1979 to October 1, 1979 to coincide with the fiscal year. Thereafter, each proposed annual revision of the Fair Market Rents will be made effective October 1.

(Section 7(o) of the Department of HUD Act, 42 U.S.C. 3535(o), Section 324 of the Housing and Community Development Amendments of 1978.)

Issued at Washington, D.C., October 2, 1979.

Moon Landrieu,

Secretary, Department of Housing and Urban Development.

[FR Doc. 79-31200 Filed 10-9-79; 8:45 am]

BILLING CODE 4210-01-M

DEPARTMENT OF JUSTICE

Parole Commission

28 CFR Part 2

Parole, Release, Supervision, and Recommitment of Prisoners, Youth Offenders, and Juvenile Delinquents

Cross Reference: For a document concerning parole, release, supervision and recommitment of prisoners, youth offenders and juvenile delinquents, see FR Doc. 79-31257, appearing in the Rules and Regulations section of this issue. Refer to contents under Justice Department for the correct page number.

BILLING CODE 4410-01-M

PENNSYLVANIA AVENUE DEVELOPMENT CORPORATION

36 CFR Ch. IX

Policy and Procedures To Facilitate Successful Relocation of Businesses and Residents Within the Pennsylvania Avenue Development Area

AGENCY: Pennsylvania Avenue Development Corporation.

ACTION: Proposed Statement of Program Approach; Advance Notice of Proposed Rulemaking.

SUMMARY: Section 8(d) of Pub. L. 92-578, October 27, 1972, The Pennsylvania Avenue Plan—1974 (the Plan) occurs. The Pennsylvania Avenue Development Corporation Act of 1972, grants to qualified owners and tenants of real property located within the Pennsylvania Avenue development area a preferential right to return to the development area as implementation of The Pennsylvania Avenue Development Corporation (the Corporation) has prepared a proposed statement of program approach and seeks public comment on the program statement prior to formal rulemaking to implement a policy related to relocation of businesses and residents pursuant to Section 8(d). Because of the mandate under Section 8(d), the Corporation is presented with special and unique issues concerning the relocation of businesses and residents, which go beyond its responsibilities as a Federal agency under the Uniform Relocation Assistance and Real Property Acquisitions Policies Act of 1970. The Corporation feels it will benefit from the comments and views solicited by public participation at this point in the decision-making process. The Corporation is seeking a workable and meaningful approach by which owners and tenants can successfully remain within the development area if they so choose.

DATE: Comments due: October 31, 1979.

ADDRESS: Comments should be addressed to the Office of the General Counsel, Pennsylvania Avenue Development Corporation, Suite 1148, 425 13th Street, NW., Washington, DC, 20004.

FOR FURTHER INFORMATION: Peter T. Meszoly, General Counsel, (202) 566-1078; Jerry Smedley, Chief of Real Estate Operations, (202) 566-0602.

SUPPLEMENTARY INFORMATION: The Pennsylvania Avenue Development Corporation (the Corporation) is a wholly owned Government corporation of the United States, created by Pub. L. 92-578, October 27, 1972, as amended, 86 Stat. 1266, 40 U.S.C. 871 *et seq.* (The Act.) The Corporation was directed to prepare a comprehensive development plan for the area adjacent to Pennsylvania Avenue, N.W., between the White House and the U.S. Capitol.

In Section 2(c) of the Act, Congress declared that "to insure suitable development, maintenance, and use of the area and the elimination of blight, it is essential that there be developed and carried out as an entirety plans for this area which will specify the uses, both public and private, to which property is to be put, the programming and financing of necessary acquisition, construction, reconstruction, and other activities." As required by this enabling legislation, the Corporation prepared a published document "The Pennsylvania Avenue Plan—1974," (the Plan) and is now in the process of implementation. During implementation, the Corporation acquires real property, and, of necessity, current occupants are displaced. Occupants who are relocated receive benefits which accrue pursuant to the Uniform Relocation Assistance and Real Property Acquisition Policies Act of 1970 (the Uniform Act).

In addition to those benefits, the Congress recognized that persons who were to be displaced from the development area had materially contributed to that area and should be provided with some opportunity to remain in the area after implementation of the Plan. It therefore provided in Section 8(d) of the Act that qualified owners and tenants of real property in

the development area would be granted a preferential right to return to the development area as implementation of the Plan occurs. Chapter 5 of the Plan sets forth broad outlines for program related to relocation and assistance to displaced businesses, but that program has not yet been sufficiently detailed to become operative, and the preferential right policy of the Act remains to be detailed.

To assist the Corporation as it formulates a comprehensive program implementing the preferential right policy, the public is requested to comment on the program statement that follows, especially with regard to the following points:

(1) Does the program statement clearly define the nature of the "preferential right" of qualified owners and tenants? Also, is the concept of "qualified owners and tenants" sufficiently comprehensive to identify all persons who should benefit under the program statement. Specifically, should non-resident owners benefit under the program?

(2) Do the procedures set forth in item E of the program statement establish appropriate and meaningful methods for a qualified owner or tenant to exercise the preferential right?

(3) Should a private developer, whose development project does not directly involve the Corporation, be required to accept qualified persons having a vested preferential right? (See Item E(2) of the program statement.)

(4) Does the rent assistance portion of the program (Item F) offer sufficient financial support to bridge the gap between pre-development and post-development rent levels with which persons who exercise their vested preferential right will be confronted?

(5) Should some alternate form of computation be used to establish the amount of rent assistance provided under Item F?

(6) Should other forms of assistance, such as marketing studies, training programs, or the like, be offered as part of the program statement on preferential right?

(7) Are alternate solutions available which will facilitate successful relocation within the development area of qualified owners and tenants under The Pennsylvania Avenue Plan—1974

Program Statement

A major concern of The Pennsylvania Avenue Plan—1974 is to reduce the hardships of relocation experienced by business and residents within the Corporation's area who are displaced as a result of implementation of the development plan. Of particular importance is the goal of keeping displacees within the development area, preferably in newly constructed facilities, so that they can enjoy some of the benefits brought to the area by the activities of the Corporation. This goal is based on Section 8(d) of the Pennsylvania Avenue Development Corporation Act of 1972, which grants qualified owners and tenants of real property in the development area whose residence or business is terminated by displacement, a preferential right to lease or purchase property made available by PADC or its agents through implementation of the Plan.

All persons displaced through property acquisition by PADC are, of course, entitled to the benefits of the Uniform Relocation and Real Property Acquisition Policies Act of 1970. The Corporation has published regulations implementing this Act, and seeks to administer them in a prompt and equitable manner. In addition, however, The Pennsylvania Avenue Plan—1974 (the Plan) proposed that the Corporation establish supplemental methods of assistance to enable viable businesses to remain in the area and, hopefully to adapt to occupancy of new space.

Because the Corporation may do little, if any, development itself (other than public improvements), opportunity for qualified business or residential displacees to occupy space made available by PADC or its agents will be severely limited. Indeed, direct space leasing from the Corporation will ordinarily be limited to hold-over tenants in property the Corporation has acquired for disposition, and interim use tenants on Corporation property held pending redevelopment.

Development will be largely accomplished by private entrepreneurs on sites either privately assembled (with or without the assistance of the Corporation), or on sites assembled by the Corporation for conveyance to selected developers. Therefore, the preferential right of qualified owners and tenants contemplated in the PADC Act will operate as a priority of opportunity to compete for the occupancy of space in private projects developed in accordance with the Plan.

The Corporation intends to implement the priority of opportunity through the procedures summarized below, which include the following:

1. If the development project involves land assembled by the Corporation, PADC will include appropriate contractual provisions in its land disposition agreements requiring the developer to grant qualified persons a priority of opportunity to seek new space in the development.

2. If the land for a development project is privately assembled or owned, PADC will initiate direct contacts with the developer and furnish information on qualified persons who could relocate to the project. PADC will also, in the course of reviewing the developer's project for conformity with the Plan, encourage the developer to consider accepting qualified persons as occupants of new space to be made available.

3. The Corporation will furnish limited rent assistance to qualified persons whose retail business is displaced by the Corporation's acquisition program, to aid such persons in adjusting to the rent structure of new space.

However, the Corporation cannot assure any displaced tenant or property owner that the priority of opportunity will result in successful relocation to new space in the development area.

(A) *List of Qualified Persons.* The Corporation shall maintain an up-to-date List of persons qualified to exercise the priority of opportunity to compete for the occupancy of new space in private real property developed in conformity with the Plan.

(B) *Qualified Person Defined.* A Qualified Person is a party (owner or tenant) whose existing business or residence in the Pennsylvania Avenue Development area is terminated: (1) by the Corporation's acquisition of fee title, or lesser interest, in the real property containing such business or residence; (2) through similar acquisition by a party other than the Corporation, if the acquisition is made directly for the purpose of implementing a development project approved by the Corporation as consistent with the Plan, or (3) by the owner of the real property containing such business or residence for the purpose of implementing a development project approved by the Corporation as consistent with the Plan; and, (4) who applies for and is placed on the Corporation's List of Qualified Owners.

(C) *Placement on the List.* A person who wishes to be included on the Corporation's list of qualified persons for pursuing a priority of opportunity shall notify the Corporation in writing to that effect. The Corporation does not specify a time limit for such notification, but urges that it be within one year of an event that initiates displacement of the person from his existing business or residence. Such an event may be receipt of notice to vacate from the Corporation or a private landowner, or the termination of the person's lease by a lessor about to undertake development. The notice to the Corporation should include: the address of the establishment to be vacated and the

reason for vacation; a short statement of the nature of the existing business (or, that the person is a resident); the amount of space utilized; and a description of any specialized equipment or unusual requirements for operation of the business.

If upon receipt and review of the notification, the Corporation determines that the person qualified to be listed, he or she will be notified to that effect and carried on the List maintained by the Corporation. If the Corporation believes that the person does not qualify, or it is premature to list the person, that matter will be discussed with the applicant and an attempt will be made to resolve the differences.

(D) *Retention on List.* Once placed on the List of Qualified Persons, the Corporation will keep a party on the List until:

1. The Corporation receives written notification that the person requests to be taken off the list;

2. The person is relocated into newly developed space within the Pennsylvania Avenue development area, after which he may not be placed back on the list;

3. The person sells, transfers, or merges his interest in the displaced business, unless after such change in ownership, not less than 51 percent of the interest in the resulting business is owned by persons, all of whom were on the List prior to the change in ownership; or,

4. The List is terminated by the Corporation upon completion of its program.

(E) *Procedure to Establish Contacts Between Qualified Persons and Developers.* 1. If a private development project involves land assembly and disposition by the Corporation to the developer, the Corporation will contractually require the developer to do the following:

a. Notify the Corporation of its leasing plan and of intention to begin seeking tenants for retail, office, or residential uses. The Corporation will then furnish the developer the List of Qualified Persons, or such portion of the List as may match the uses the developer will fill.

b. Upon receipt of the List from the Corporation, the developer shall send registered letters to all persons on the list (in the applicable use categories), notifying them that the developer is seeking tenants. The developer may include in the letter relevant information about the types of tenants sought, and the specific uses sought. The developer will furnish the Corporation with a list of mailings and the standard form, if any, of its solicitation.

c. The letter of notification from the developer shall advise of, and the developer shall provide, a 60-day period of exclusive negotiation with Qualified Persons. During this period the developer: (i) Shall discuss tenanting opportunities only with Qualified Persons who have responded positively to the developer's letter of notification; (ii) shall not seek other potential tenants or negotiate agreements to occupy space with parties other than Qualified Persons, except for equity partners in the development project who will become tenants, or prime tenants committed to space at the outset of the project; and (iii) shall negotiate in good faith with responsive Qualified Persons, and seek to accommodate them as tenants if they can adapt to the used expected to be available and to the developer's leasing plan. At the conclusion of the exclusive right period the developer will report to the Corporation the results of its efforts.

2. If a private development project does not involve land assembly assistance or land disposition by the Corporation, the Corporation will nevertheless encourage the developer to consider Qualified Persons by the following means:

a. In the process of reviewing the developer's preliminary or final plans, the Corporation will explore with the developer the tenanting opportunities expected to be available in the project and furnish the developer the List of Qualified Persons.

b. At the appropriate time, Qualified Persons in the applicable use categories will be notified in writing of the anticipated opportunities for tenancy in the project. This notification may be made by the Corporation or by the developer, if he agrees to do so.

c. Upon notification, interested Qualified Persons should directly contact the developer to pursue opportunities that are mutually acceptable. The developer, using the List, may also initiate contacts with Qualified Persons.

d. The developer will be asked by the Corporation to report any agreements for tenanting reached with Qualified Persons.

(F) *Rent Assistance.* The Corporation will provide limited rent assistance to Eligible Persons, within the limits of the funds available for this program. To be considered as an Eligible Person, the party must be: (i) The owner of a retail business on the List of Qualified Persons; (ii) directly displaced by the Corporation's acquisition of real property; and (iii) relocating to space in a project within the development area constructed by the Corporation or by a private developer who has acquired property for the project from the Corporation. A party which believes itself eligible for such assistance should contact the Corporation's relocation officer.

The Corporation will provide the rent assistance to Eligible Persons by either (1) offsetting the payments due to the Corporation from the developer, in proportion to the developer reducing the rental required from the Eligible Person; or (2) direct rent subsidy payments to the Eligible Person, if the legality of the Corporation making such payment is favorably resolved.

The amounts of rent assistance payments shall be based on a rent differential between the cost of the old space and cost of the new space occupied by the Eligible Person. The Corporation will make payments for not more than five years, subject to the following graduated and declining limits.

Year	Percentage of differential	Maximum
First	Will pay up to 100%, but not to exceed.	$5,000
Second	Will pay up to 80%, but not to exceed.	4,000
Third	Will pay up to 60%, but not to exceed.	3,000
Fourth	Will pay up to 40%, but not to exceed.	2,000
Fifth	Will pay up to 20%, but not to exceed.	1,000

The rent differential will be calculated by subtracting the attributable rent in the old space (determined by the cost per square foot times the number of occupied square feet in the old space or the new space, *whichever is less*, adjusted by the Consumer Price Index—CPI); from the rent in the new space (determined by the cost per square foot times the number of occupied square feet in the new space, or in the old space, *whichever is less*).

After the first year of rental assistance, to qualify for the second and each succeeding year, the Eligible Person must furnish the Corporation with a statement showing the sales for the previous year and the sales for the last year of operation at the old location, or the average of the last three years at the old location, whichever is higher, both as adjusted by the CPI. If the sales in any year exceed the sales on a per square foot basis at the old location, as adjusted by the CPI, by more than 25 percent, the assistance will cease.

Dated: September 27, 1979.

Peter T. Meszoly,

Assistant Director—Legal and General Counsel.

[FR Doc. 79-31299 Filed 10-9-79; 8:45 am]

BILLING CODE 7630-01-M

Notices

Federal Register
Vol. 44, No. 197
Wednesday, October 10, 1979

This section of the FEDERAL REGISTER contains documents other than rules or proposed rules that are applicable to the public. Notices of hearings and investigations, committee meetings, agency decisions and rulings, delegations of authority, filing of petitions and applications and agency statements of organization and functions are examples of documents appearing in this section.

DEPARTMENT OF AGRICULTURE

Forest Service

Modoc National Forest, Lassen Counties, California; Intent To Prepare an Environmental Impact Statement for Forest Plan

The USDA-Forest Service will prepare an environmental impact statement for the forest plan for the Modoc National Forest.

This forest plan is one of eighteen currently being developed in the Pacific Southwest Region. The development of these several forest plans and the regional plan is starting simultaneously in order to facilitate the identification of issues to be addressed. Forest planning will be completed after adoption of a regional plan.

This forest plan will provide policy and program direction for all National Forest System lands under the administration of the Forest Supervisor.

The Forest Plan will:

(a) Briefly describe the major public issues and management concerns,

(b) Briefly describe the lands and resources of the Modoc National Forest,

(c) Identify the goals and objectives of management,

(d) Describe the expected types and amounts of goods, services, or uses—by decades,

(e) Identify the proposed vicinity, timing, standards, and guidelines for proposed and probable management activities,

(f) Identify monitoring and evaluation criteria,

(g) Refer to information used in plan development, and

(h) Identify the persons who participated in the development of the plan, including a summary of their qualifications.

The issues expected to be discussed in the development of this plan include but are not limited to:

(a) The kinds and amounts of goods, the services to be produced, and the uses to be permitted on the National Forest System lands,

(b) The public costs of providing these goods and services, and

(c) The physical, biological, economic and social effects associated with the production of goods and services.

The Forest plan will be selected from a range of alternatives which will include at least:

(a) A "no action" alternative which represents continuation of the present management direction, and

(b) One or more alternatives formulated to respond to major public issues and management concerns.

As an early step in the planning, Federal, State, and local agencies, organizations, and individuals who may be interested in, or affected by the adopted plan, will be invited to participate in:

(a) Identification of the issues to be addressed,

(b) Identification of those issues to be analyzed in depth, and

(c) Elimination from detailed study those issues which are not significant, or which have been covered by prior environmental review, or are not within the scope of this Forest Plan.

To accomplish this, public meeting will be held:

November 15, 1979—Modoc National Forest, Conference Room, 441 North Main Street, Alturas, California—7:30 pm–9:30 pm.

Written comments and suggestions about these items are encouraged. To be most useful, they should be received by the Forest Supervisor before January 7, 1980. The kind of additional public participation opportunities has not yet been determined. It will vary as the planning progresses and will be responsive to issues and concerns identified at the meeting listed above.

The estimated date for distribution of the draft environmental impact statement is December, 1982. Following a three month public review period, a final environmental impact statement will be prepared and distributed in approximately June, 1983.

For further information about the planning project, or the availability of the environmental impact statement, or other documents relevant to the planning process, contact:

Lawrence K. Smith, USDA—Forest Service, Modoc National Forest Land Management Planner, 441 North Main Street, Alturas, CA 96101—(916) 233-3521.

October 1, 1979.

Zane G. Smith, Jr.,
Regional Forester, Pacific Southwest Region.

[FR Doc. 79-31229 Filed 10-9-79; 8:45 am]
BILLING CODE 3410-11-M

CIVIL AERONAUTICS BOARD

[Miami-London Case; Docket 36764]

Miami-London Case; Assignment of Proceeding

This proceeding is hereby assigned to Administrative Law Judge Elias C. Rodriguez. Future communications should be addressed to Judge Rodriguez.

Dated at Washington, D.C., October 3, 1979.

Joseph J. Saunders,
Chief Administrative Law Judge.

[FR Doc. 79-31214 Filed 10-9-79; 8:45 am]
BILLING CODE 6320-01-M

DEPARTMENT OF COMMERCE

Industry and Trade Administration

Battelle Memorial Institute—Pacific Northwest Division et al.; Applications for Duty Free Entry of Scientific Articles

The following are notices of the receipt of applications for duty-free entry of scientific articles pursuant to Section 6(c) of the Educational, Scientific, and Cultural Materials Importation Act of 1966 (Public Law 89-651; 80 Stat. 897). Interested persons may present their views with respect to the question of whether an instrument or apparatus of equivalent scientific value for the purposes for which the article is intented to be used is being manufactured in the United States. Such comments must be filed in triplicate with the Director, Statutory Import Programs Staff, Bureau of Trade Regulation, U.S. Department of Commerce, Washington, D.C. 20230, on or before October 22, 1979.

Regulations (15 CFR 301.9) issued under the cited Act prescribe the requirements for comments.

A copy of each application is on file, and may be examined between 8:30 A.M. and 5:00 P.M., Monday through Friday, in Room 735 at 666, 11th Street N.W. Washington, D.C.

Docket No.: 79-00331. Applicant: Battelle Memorial Institute—Pacific Northwest Division, P.O. Box 999, Richland, WA 99352. Article: TG-26/V Tunnel Guidance System and Accessories. Manufacturer: ZED Instruments Ltd., United Kingdom. Intended use of article: As part of a blind shaft borer the article is intended to be used to monitor the position of two laser beams projected from self-plumbing laser mounted at the surface; transmit signals proportional to laser beam position to a processing unit; and, using this information and data on machine attitude, calculate, and display to the machine operator, the displacement of the machine from the true shaft centerline. Application received by commissioner of customs: September 4, 1979.

Docket No.: 79-00406. Applicant: Suny—Binghamton—Department of Biological Sciences, Vestal Parkway, East Binghamton, New York 13901. Article: Type 225-2B-SS Infrared Gas Analyzer and Accessories. Manufacturer: Analytical Development Co. Ltd., United Kingdom. Intended use of Article: The article is intended to be used for research on plants; specifically determining changes in photosynthesis and respiration in response to changing environmental conditions. The article will also be used in the course Advanced Plant Ecology which includes physiological plant ecology. Application received by commissioner of customs: September 4, 1979.

Docket No. 79-00408. Applicant: Montana State University, Department of Physics, Bozeman, MT 59717. Article: CPS-2 Plug-in Unit 6.5 MHz with Standard Probe Head. Manufacturer: Spin Lock Ltd., Canada. Intended use of article: The article is an accessory to an existing NMR spectrometer manufactured by the same manufacturer used in pulsed nuclear magnetic resonance experiments. Investigations will consist of the study of lanthanum chromite based materials to determine the concentration of hydrogen, diffusion rate of hydrogen, and hydrogen site location in the materials under high temperatures and in various atmospheres. Studies will also include measurements on the H-bonded ferroelectrics to study slow and ultraslow motions due to phase transitions and clustering above T_c as a function of temperature, pressure, and electric field. In addition, the article will be used for educational purposes in the courses: Physics 461-62-63, 590 and 690. Application received by Commissioner of Customs: September 4, 1979.

Docket No. 79-00409. Applicant: The Children's Memorial Hospital, Department of Pathology, 2300 Children's Plaza, Chicago, Illinois 60614. Article: Electron Microscope, Model EM 10A and Accesories. Manufacturer: Carl Zeiss, West Germany. Intended use of article: The article is intended to be used for medical diagnosis on suitably prepared biologic material, primarily tissues from pediatric patients studied and treated; and examination of adequately processed biologic materials, primarily cells and tissues, employed in medical research performed by investigators of the same institution, and tending to advance medical knowledge in various fields of specialization. Post-graduate students of Medicine (Pediatrics) and Pathology, specialized medical technologists, and physicians-in-training will receive training and non-structured education in the use of this article as a tool in modern medical diagnosis. Application received by Commissioner of Customs: September 4, 1979.

Docket No. 79-00410. Applicant: Middletown Hospital Association, 105 McKnight Drive, Middletown, Ohio 45042. Article: Electron Microscope, Model EM 109 and Accessories. Manufacturer: Carl Zeiss, West Germany. Intended use of article: The article is intended to be used for the study of human tissues and fluids obtained for diagnostic purposes from surgial specimens and post mortem examinations. The purposes of these investigations is to identify and understand disease processes, reveal etiologic factors and agents peculiar to certain illnesses and to identify the exact cell of origin of certain cancers that are unclassifiable at present by any other means. The article will also be used for educational purposes relative to the reseach purposes described above. Application received by Commissioner of Customs: September 4, 1979.

Docket No. 79-00411. Applicant: Veterans Administration Hospital, Southfield and Outer Drive, Allen Park, Michigan 48101. Article: Electron Microscope, Model EM 109 and Accessories. Manufacturer: Carl Zeiss, West Germany. Intended use of article: The article is intended to be used in a special medical program with the primary goal to enhance the delivery of patient care, and the secondary goal of training and research support. Specimens are processed for examination in the electron microscope, for diagnostic pathology. The article will also be used to introduce E.M. techniques and methodologies to the in-house staff which rotates through the various services, and to instruct this staff on ultrastructural criteria for differential diagnosis by electron microscopy. Application received by Commissioner of Customs: September 4, 1979.

Docket No. 79-00412. Applicant: University of Arizona, Rm. 220, New Chemistry Building, Tucson, Arizona 85721. Article: LKB 2127-001 Tachophor Complete with Power Supply and Accessories. Manufacturer: LKB Produkter AB, Sweden. Intended use of article: The article is intended to be used to separate and identify small molecular weight compounds from various biological samples. Specifically, the article will be used to measure the levels of various nucleiotides (ATP, ADP, AMP, CTP, etc.) and pyridine nucleotides ($NADP^+$, NAD^+) in muscle and plant extracts and to determine the purity of synthetic compounds. Application received by Commissioner of Customs: September 4, 1979.

Docket No. 79-00413. Applicant: University of Rochester, Laboratory for Laser Energetics, 250 East River Road, Rochester, New York 14627. Article: 2 (each) 50/40 Microchannel Plate Image Intensifiers and 18mm Input Diameter Image Intersifiers. Manufacturer: Mullard Ltd., United Kingdom. Intended use of article: The article is intended to be used for studing the feasibility of heating and compressing small targets containing deuterium and tritium with a high power pulsed laser to produce thermonuclear reactions. Application received by commissioner of customs: September 4, 1979.

Docket No. 79-00414. Applicant: NIAID, NIH, DHEW—Rocky Mountain Laboratory, 903 S. 4th Street, Hamilton, MT 59840. Article: Nuclear Magnetic Resonance Spectrometer Model FX-90Q(II) and Accessories. Manufacturer: Jeol Ltd., Japan. Intended use of article: The article is intended to be used for studies of the following materials: (1) Endotoxins derived from mycobaterial fractions (S. typhimurium for example). (2) Immunotherapeutic fractions derived from C. parvum. (3) Rickettsial extracts. (4) Synthetic analogs of the bacterial adjuvant monomer muramyl-N-acetyl-alanyl-isoglutamine. (5) Tumor regressive activity of the above, to elucidate fine structural features by proton, 13 carbon etc., FT-NMR spectrometry. Application received by commissioner of customs: August 29, 1979.

Docket No. 79-00415. Applicant: Solar Energy Research Institute, 1536 Cole Boulevard, Golden, CO 80401. Article: High Resolution Fourier Transformation Multi-Nuclear Magnetic Resonance Spectrometer System, Model JNM/FX-

90Q and Accessories. Manufacturer: Joel Ltd., Japan. Intended use of article: The article is intended to be used for studies of diamagnetic and paramagnetic organic, inorganic, and organometallic and biological compounds and materials. Experiments which will be conducted will involve multinuclear pulsed FT-NMR measurements to measure the chemical shifts, nuclear coupling, and nuclear relaxation times of various nuclei. These experiements will be used to help characterize new compounds and materials and aid in more detailed studies of their geometric and electronic structures. Particularly wide spectral widths will be required to examine compounds such as diamagnetic transition metal hydrides, with large chemical shift differences and paramagnetic transition-metal organometallic compounds which exhibit contact-shifted NMR spectra. NMR measurements of both proton and carbon will constitute the majority of these studies, with a wide variety of other nuclei such as fluorine, phosphorus, dueterium, manganese, magnesium, silicon, oxygen and nitrogen, to be pursued at various times. In addition to characterization and structural determination, the objectives of these studies will include an elucidation of reaction mechanisms by an analysis of product distribution, rates of formation, and detection of intermediates. Of particular importance will be steady state and flash photolysis studies in conjunction with pulsed FT-NMR measurements. These studies will enable more detailed studies of photochemical reactions to be pursued, including the detection and characterization of relatively long-lived intermediates. Application received by commissioner of customs: August 29, 1979.

Docket No.: 79-00416. Applicant: New York University Medical Center, 500 First Avenue, New York, N.Y. 10016. Article: Electron Microscope, Model EM 10A and Accessories. Manufacturer: Carl Zeiss, West Germany. Intended use of article: The article is intended to be used for diagnostic renal biopsies and research in experimental nephritis. Animal kidneys will be examined to determine sites of immune complex deposition and tracers that are injected such as ferritin. The article will also be used in an on-going training program which is part of residency in Pathology. Application received by commissioner of customs: September 6, 1979.

Richard M. Seppa,

Director, Statutory Import Programs Staff.

(Catalog of Federal Domestic Assistance Program No. 11.105, Importation of Duty-Free Educational and Scientific Materials.)

[FR Doc. 79-31284 Filed 10-9-79; 8:45 am]

BILLING CODE 3510-25-M

The Buffalo General Hospital; Notice of Decision on Application for Duty Free Entry of Scientific Article

The following is a decision on an application for duty-free entry of a scientific article pursuant to Section 6(c) of the Educational, Scientific, and Cultural Materials Importation Act of 1966 (Public Law 89-651, 80 Stat. 897) and the regulations issued thereunder as amended (15 CFR 301).

A copy of the record pertaining to this decision is available for public review between 8:30 a.m. and 5:00 p.m. at 666, 11th Street, N.W. (Room 735) Washington, D.C.

Docket No. 79-00225. Applicant: The Buffalo General Hospital, 100 High Street, Buffalo, New York 14203. Article: Heart/Lump pump and Accessories. Manfacturer: Biomedix, United Kingdom. Intended use of article: The article is intended to be used for the study of long term effects on myocardial structure and function after myocardial preservation during open heart surgery with potassium cardioplegia and profound hypothermia. Since aging characteristics of certain inbred strain of rats are well known, rat hearts will be used as the experimental animal.

Comments: No comments have been received with respect to this application.

Decision: Application approved. No instrument or apparatus of equivalent scientific value to the foreign article, for such purposes as this article is intended to be used, is being manufactured in the United States.

Reasons: The foreign article is specifically designed for perfusion of beating rat hearts. The Department of Health, Education, and Welfare advises in its memorandum dated August 9, 1979 that (1) the capability of the foreign article described above is pertinent to the applicant's intended purpose and (2) it knows of no domestic instrument or apparatus of equivalent scientific value to the foreign article for the applicant's intended use.

The Department of Commerce knows of no other instrument or apparatus of equivalent scientific value to the foreign article, for such purposes as this article is intended to be used, which is being manufactured in the United States.

Richard M. Seppa,

Director, Statutory Import Programs Staff.

(Catalog of Federal Domestic Assistance Program No. 11.105, Importation of Duty-Free Educational and Scientific Materials.)

[FR Doc. 79-31281 Filed 10-9-79]

BILLING CODE 3510-25-M

National Radio Astronomy Observatory; Notice of Decision on Application for Duty Free Entry of Scientific Article

The following is a decision on an application for duty-free entry of a scientific article pursuant to Section 6(c) of the Educational, Scientific, and Cultural Materials Importation Act of 1966 (Public Law 89-651, 80 Stat. 897) and the regulations issued thereunder as amended (15 CFR 301).

A copy of the record pertaining to this decision is available for public review between 8:30 a.m. and 5:00 p.m. at 666, 11th Street, N.W. (Room 735) Washington, D.C.

Docket No. 79-00274. Article: National Radio Astronomy Observatory, Post Office Box 0, 1000 Bullock Blvd. NW., Socorro, NM 87801. Article: 55 Pieces TE_{01} Model Circular Waveguide and 3410 pieces of coupling sleeves and Accessories. Manufacturer: Sumitomo Electric Industries, Japan. Intended use of article: The articles are to be used as part of the Very Large Array radio telescope to transmit radio wavelength radiation received from extraterrestrial objects to recording apparatus. The study of this radiation enables astronomers to study the sources of energy, origin, and evolution of the universe.

Comments: No comments have been received with respect to this application.

Decision: Application approved. No instrument or apparatus of equivalent scientific value to the foreign article, for such purposes as this article is intended to be used, is being manufactured in the United States.

Reasons: The application relates to repair components for an instrument that had been previously imported for the use of the applicant institution. The article is being furnished by the manufacturer which produced the instrument with which the article is intended to be used and is pertinent to the applicant's purposes.

The Department of Commerce knows of no similar components being manufactured in the United States, which are interchangeable with or can be readily adapted to the instrument

with which the foreign article is intended to be used.

Richard M. Seppa,

Director, Statutory Import Programs Staff.

(Catalog of Federal Domestic Assistance Program No. 11.105, Importation of Duty-Free Education and Scientific Materials.)

[FR Doc. 79-31282 Filed 10-9-79; 8:45 am]

BILLING CODE 3510-25-M

National Radio Astronomy Observatory Associated Universities; Notice of Decision on Application for Duty Free Entry of Scientific Article

The following is a decision on an application for duty-free entry of a scientific article pursuant to Section 6(c) of the Educational, Scientific, and Cultural Materials Importation Act of 1966 (Public Law 89-651, 80 Stat. 897) and the regulations issued thereunder as amended (15 CFR 301).

A copy of the record pertaining to this decision is available for public review between 8:30 A.M. and 5:00 P.M. at 666, 11th Street, N.W. (Room 735) Washington, D.C.

Docket No. 79-00305. Applicant: National Radio Astronomy Observatory Associated Universities, Inc., 2010 N. Forbes Blvd., Suite 100, Tucson, AZ 85705. Article: Repair of Varian Klystron VRB 2113A30. Manufacturer: Varian Associates of Canada Ltd., Canada. Intended Use of Article: The article will be used as a phase-locked local oscilator in a millimeter wave radio astronomy receiver. This receiver is used in conjunction with a microwave antenna to measure the intensity, polarization, frequency and direction of cosmic radiation.

Comments: No comments have been received with respect to this application. Decision: Application approved. No instrument or apparatus of equivalent scientific value to the foreign article, for such purposes as this article is intended to be used, is being manufactured in the United States.

Reasons: The foreign article provides a frequency in the range between 80-110 gigahertz. The National Bureau of Standards (NBS) advises in its memorandum dated September 11, 1979 that (1) the capability of the foreign article described above is pertinent to the applicant's intended purpose and (2) it knows of no domestic instrument or apparatus of equivalent scientific value to the foreign article for the applicant's intended use.

The Department of Commerce knows of no other instrument or apparatus of equivalent scientific value to the foreign article, for such purposes as this article is intended to be used, which is being manufactured in the United States.

Richard M. Seppa,

Director, Statutory Import Programs Staff.

(Catalog of Federal Domestic Assistance Program No. 11.105, Importation of Duty-Free Educational and Scientific Materials.)

[FR Doc. 79-31283 Filed 10-9-79; 8:45 am]

BILLING CODE 3510-25-M

West Virginia Institute of Technology and State Technical Institute at Memphis; Consolidated Decision on Applications for Duty Free Entry of Mobile Solar Test Facility

The following is a consolidated decision on applications for duty-free entry of mobile solar test facility pursuant to Section 6(c) of the Educational, Scientific, and Cultural Materials Importation Act of 1966 (Public Law 89-651, 80 Stat. 897) and the regulations issued thereunder as amended (15 CFR 301). (See especially Section 301.11(e).)

A copy of the record pertaining to each of the applications in this consolidated decision is available for public review between 8:30 A.M. and 5:00 P.M. at 666, 11th Street, N.W. (Room 735), Washington, D.C.

Docket No. 79-00254. Applicant: West Virginia Institute of Technology, Montgomery, West Virginia 25136. Article: Mobile Solar Test Facility (MSTF-1) and Accessories. Manufacturer: Solafrin Products, Canada. Intended use of article: The article is intended to be used to measure the amount of solar energy than can be absorbed by different types of collectors. The courses in which the article will be used are Experimental Methods and Energy Conversion. The Experimental Methods course is a laboratory course where the student is familiarized with methods of measuring phenomena such as: temperature—using thermocouples, thermometers, and thermisters; pressure distribution in a nozzle; properties of steam; performance of a low pressure boiler; orsat analysis; air conditioning devices, and absorption of solar energy. The Energy Conversion Course is a lecture course which includes a laboratory period. Advice submitted by the National Bureau of Standards: September 6, 1979.

Docket No. 79-00313. Applicant: State Technical Institute at Memphis, 5983 Macon Cove, Memphis, Tennessee 38143. Article: Mobile Solartest Facility. Manufacturer: Solafrin Products, Canada. Intended use of article: The article is intended to be used in the course Solar Energy I, AR 724 to train technicians to design and operate Solar Collectors. Advice submitted by the National Bureau of Standards: September 11, 1979.

Comments: No comments have been received in regard to any of the foregoing applications.

Decision: Applications approved. No instrument or apparatus of equivalent scientific value to the foreign articles, for such purposes as these articles are intended to be used is being manufactured in the United States.

Reasons: Each article can measure solar energy absorption using several different painted or coated collectors with different rates of absorption. The National Bureau of Standards advises in the respectively cited memoranda, that the features described above are pertinent to the purposes for which each of the foreign articles to which these applications relate is intended to be used. NBS also advices that it knows of no domestic instrument which provided the pertinent features of each article.

The Department of Commerce knows of no other instrument or apparatus of equivalent scientific value to any of the foreign articles to which the foregoing applications relate, for such purposes as these articles are intended to be used, which is being manufactured in the United States.

Richard M. Seppa,

Director, Statutory Import Programs Staff.

(Catalog of Federal Domestic Assistance Program No. 11.105, Importation of Duty-Free Educational and Scientific Materials.)

[FR Doc. 79-31285 Filed 10-9-79; 8:45 am]

BILLING CODE 3510-25-M

National Oceanic and Atmospheric Administration, Pacific Fishery Management Council and Its Scientific and Statistical Committee; Public Meeting With Partially Closed Session

AGENCY: National Marine Fisheries Service, NOAA.

SUMMARY: The Pacific Fishery Management Council and its Scientific and Statistical Committee will conduct a series of meetings which will include a Council scoping meeting.

DATES: November 6-8, 1979.

ADDRESS: The meetings will take place at the Red Lion Inn, 29th and Chinden Boulevard, Boise, Idaho.

FOR FURTHER INFORMATION CONTACT: Pacific Fishery Management Council 526 S.W. Mill Street, Second Floor, Portland, Oregon 97201, Telephone: (503) 221-6352.

SUPPLEMENTARY INFORMATION: The Pacific Fishery Management Council was established by Section 302 of the Fishery Conservation and Management

Act of 1976 (Public Law 94-265), and the Council has established a Scientific and Statistical Committee to assist in carrying out its responsibilities. Meeting Agendas follow:

Scientific and Statisitical Committee (SSC) (open meeting) (November 6-7, 1979) (1 p.m. to 5 p.m. on Wednesday, November 6; 10 a.m. to 5 p.m. on Thursday, November 7).

Agenda: Discuss fishery management plans (FMP's) under development, conduct a public comment period beginning at 3:30 p.m. on November 6, and conduct other Committee business.

Council: (open meeting) (November 7-8, 1979) (10 a.m. to 5 p.m. on November 7; 8 a.m. to 5 p.m. on November 8).

Agenda: Open Session—Review of FMP's; conduct other fishery management business, and conduct a public comment period beginning at 4 p.m. on November 7; and conduct a scoping meeting at 8 a.m. on November 8, to determine the scope and significance of issues related to the 1980 Salmon Plan Amendment. Members of affected organizations and agencies and other interested persons are invited to participated in this meeting.

Council: (closed session) (November 7, 1979) (8 a.m. to 10 a.m.).

Agenda: Closed Session—Discuss the status of current maritime boundary and resource negotiations between the U.S. and Canada and discuss personnel matters concerning appointments to vacancies on subpanels and teams. Only those Council members, Scientific and Statistical Committee members, and related staff having security clearance will be allowed to attend this closed session. The Assistant Secretary for Administration of the Department of Commerce with the concurrence of its General Counsel, Formally determined on June 20, 1979, pursuant to Section 10(d) of the Federal Advisory Committee Act, that the agenda items covered in the closed session may be exempt from the provisions of the Act relating to open meetings and public participation therein, because items will be concerned with matters that are within the purview of 5 U.S.C. 552b(c)(1), as specifically authorized under criteria established by an executive order to be kept secret in the interests of national defense or foreign policy and (6), as information which is properly classified pursuant to Executive Order and as information of a personal nature where disclosure would constitute a clearly unwarranted invasion of personal privacy. (A copy of the determination is available for public inspection and copying in the Central Reference and Records Inspection Facility, Room 5317, Department of Commerce.) All other portions of the meeting will be open to the public.

Dated: October 3, 1979.

Winfred H. Meibohm,

Executive Director, National Marine Fisheries Service.

[FR Doc. 79-31280 Filed 10-9-79; 8:45 am]

BILLING CODE 3510-22-M

National Bureau of Standards

Magnetic Tape Labels and File Structure for Information Interchange; Proposed Federal Information Processing Standard

Under the provisions of Public Law 89-306 (79 Stat. 1127; 40 U.S.C. 759(f)) and Executive Order 11717 (38 FR 12315, dated May 11, 1973), the Secretary of Commerce is authorized to establish uniform Federal ADP standards. A Federal Information Processing Standard, Magnetic Tape Labels and File Structure for Information Interchange, is being proposed for Federal use. It is based on the Federal adoption of the voluntary industry standard developed by the American National Standards Institute. Upon approval of the standard, the General Services Administration will incorporate it into their Federal Property Management Regulations.

Prior to the submission of a final endorsement of this proposal to the Secretary of Commerce for review and approval, it is essential to insure that proper consideration is given to the needs and views of manufacturers, the public, and state and local governments. The purpose of this notice is to solicit comments on such needs and views.

Comments on the levels of this standard, expected usage, and current needs and implementations would be especially useful. Also, please include any information that you have on the cost of using this standard and the expected benefits.

A validation process will be needed to support this standard, and NBS is now considering the appropriate and economical techniques which could be implemented with available resources in the near future. Comments regarding existing validation means and feasible approaches covering vendor and user responsibilities are welcome.

The proposed Federal Information Processing Standard contains two portions: (1) an announcement portion which provides information concerning the applicability implementation, and maintenance of the standard is provided in its entirety in this notice; and (2) a specification portion which deals with the technical requirements of the standard, American National Standard Magnetic Tape Labels and File Structure for Information Interchange, X3.27-1978.

Interested parties may obtain a copy of the technical specifications from the American National Standards Institute, 1430 Broadway, New York, New York 10018. Comments are invited and may be submitted in writting to the Office of ADP Standards Administration, Instutite for Computer Sciences and Technology, National Bureau of Standards, Washington, D.C. 20234. To be considered, comments on this proposed standard must be received on or before December 10, 1979.

Written comments received in response to this notice plus written comments obtained from Federal departments and independent agencies will be made part of the public record and will be made available for inspection and copying in the Central Reference and Records Inspection Facility, Room 5317, Main Commerce Building, 14th Street between Constitution Avenue and E Street, NW., Washington, D.C. 20230.

Dated: October 4, 1979.

Thomas A. Dillon,

Acting director.

Federal Information Processing Standards Publication

(date ———)

Announcing the Standard for Magnetic Tape Labels and File Structure for Information Interchange

Federal Information Processing Standards Publications are issued by the National Bureau of Standards pursuant to the Federal Property and Administrative Services Act of 1949, as amended, Public Law 89-306 (79 Stat. 1127), Executive Order 11717 (38 FR 12315, dated May 11, 1973) and Part 6 of Title 15 Code of Federal Regulations (CFR).

1. *Name of Standard.* Magnetic Tape Labels and File Structure for Information Interchange (FIPS PUB ———).

2. *Category of Standard.* Software Standard, Operating Procedures.

3. *Explanation.* This publication announces the adoption of X3.27-1978, American National Standard Magnetic Tape Labels and File Structure for Information Interchange, as a Federal Standard. This standard establishes four levels of labeling, label formats, blocking structure, and tape-mark relationships on magnetically recorded tapes (volumes) so that these volumes can be used for information interchange.

This standard contains specifications for processing volumes that correspond to a level of this standard to ensure proper treatment and understanding of these volumes and their contents in information interchange. The implementation of these processing specifications is called the system. A system exists for each level.

Each implementation of this standard is expected to be able to produce and accept

volumes that correspond to a level of this standard.

Any volume or volume set (defined in X3.27–1978 as a collection of related volumes) of a given level can be processed correctly by any system of equal or higher level; and any level system can process correctly any volume or volume set of equal or lower level. For example, a level 1 volume can be processed correctly on system levels 1, 2, 3, and 4. Similarly, system level 3 can process correctly volumes produced by level systems 1, 2, and 3.

4. *Approving Authority.* Secretary of Commerce.

5. *Maintenance Agency.* Department of Commerce, National Bureau of Standards (Institute for Computer Sciences and Technology).

6. *Cross Index.* American National Standard X3.27–1978, Magnetic Tape Labels and File Structure for Information Interchange.

7. *Related Documents.*

a. American National Standard Code for Information Interchange, X3.4–1968 (FIPS PUBS 1 and 7), X3.4–1977.

b. American National Standard Recorded Magnetic Tape for Information Interchange (9-Track, 200 CPI, NRZI), X3.14–1973.

c. American National Standard Recorded Magnetic Tape for Information Interchange (9-Track, 800 CPI, NRZI), X3.22–1973, FIPS PUB 3–1.

d. American National Standard COBOL, X3.23–1974, FIPS PUB 21–1.

e. American National Standard FORTRAN X3.9–1978.

f. American National Standard Representation for Calendar Date and Ordinal Date for Information Interchange, X3.30–1971, FIPS PUB 4.

g. American National Standard Recorded Magnetic Tape for Information Interchange (9-Track, 1600 CPI, Phase-Encoded), X3.39–1973, FIPS PUB 25.

h. American National Standard Unrecorded Tape, X3.40–1973.

i. American National Standard Representation of Numeric Values in Character Strings for Information Interchange, X3.42–1975.

j. American National Standard Recorded Magnetic Tape for Information Interchange (9-Track, 6250 CPI, Phase-Encoded), X3.54–1976, FIPS PUB 50.

k. American National Standard for Bibliographic Information Interchange on Magnetic Tape, Z39.2–1971.

l. Transmittal Forms for Describing Computer Magnetic Tape File Properties, FIPS PUB 53.

m. Guidelines for Describing Information Interchange Formats, FIPS PUB 20.

8. *Objectives.* The objectives of this standard is to reduce the difficulty of interchange of information recorded on magnetic tapes between different users and different computing systems. This objective is accomplished by specifying the format, content, and arrangement of magnetically recorded labels that identify and structure files and by specifying the format and arrangement of the blocks that contain the records that constitute a file.

The attainment of this objective, from a government-wide point of view, depends upon the widespread availability and use of systems that comply with this standard. Thus, the general intent of this publication is to provide a standard means of recording machine sensible labels, record formats (fixed, variable, and spanned), and file-volume combinations (single-file single-volume, single-file multivolume, multifile single-volume, multi-file multi-volume) in an interchange environment.

9. *Applicability.* This standard is applicable to all Federal departments and agencies. Information processing systems shall have the capability of generating and processing magnetic tape labels and file structure in conformance to this standard. The standard shall be used in the interchange of magnetic tapes unless the interchange parties can agree on an alternate interchange format which is more efficient, convenient, and cost-effective.

10. *Specifications.* This standard adopts, in whole, the American National Standard X3.27–1978 for Magnetic Tape Labels and File Structure for Information Interchange.

The Federal Standard contains the same four levels of labeling described in X3.27–1978. Three of the main constituents of a level—the file formats, the labels used, and the record formats, are described in the following table. Each constituent contains two or three options. Within each option the types of file formats, labels, and records formats permitted for that option are listed.

Constituent	Option	Type
File format	1	Single-file single-volume and single-file multi-volume.
	2	Single-file single-volume, and single-file multi-volume, and multi-file single-volume, and multi-file multi-volume.
Labels	1	VOL1, HDR1, EOV1, EOF1.
	2	VOL1, HDR1, HDR2, EOV1, EOV2, EOF1, EOF2.
Record format	1	Fixed.
	2	Fixed and variable.
	3	Fixed, and variable, and spanned.

The four levels of labeling in the Federal Standard numbered 1, 2, 3, and 4 in increasing order of complexity are made up of the constitutent options as follows:

Summary of Level Constituents

	File format	Labels	Record format
Level 1	Option 1	Option 1	Option 1
Level 2	Option 2	Option 1	Option 1
Level 3	Option 2	Option 2	Option 2
Level 4	Option 2	Option 2	Option 3

10.1 *Qualifications:* a. ANSI X3.27–1978 specifies the use of the American National Standard Code for Information Interchange (ASCII), X3.4–1977, as the character code in representing the labels and data. For the purposes of this standard, American National Standard Code for Information Interchange defined in FIPS PUBS 1 and 7 replaces all references to ANSI X3.4–1977 and ASCII in the ANSI X3.27–1978. All labels and data will be recorded in the character code defined in FIPS PUBS 1 and 7.

b. The specifications for this standard include, in whole, Appendix A, "Levels of Systems," and Appendix B, "Utilization of this Standard," of ANSI X3.27–1978. The concepts and guidance contained in these appendices are considered valuable for maximum utilization of ANSI X3.27–1978. Should differences occur, the Standard proper takes precedence over Appendix A.

c. This standard requires that the following "mechanisms" described in ANSI X3.27–1978, Section 1.3.1 (2) through (6), be provided in the system and that the documentation of these mechanisms be supplied in a separate document on preparing and using "interchange tapes." This document shall be a user's manual for producing and reading magnetic tapes conforming to this standard. The use of label facilities through each standard programming language supplied with the computer system (Federal or ANSI) shall be separately described as well as any utilities capable of supporting this standard. A single complimentary copy of this user's manual shall be transmitted to NBS for informational purposes, at the address cited in Section 11.3. The mechanisms are:

A mechanism for a system to obtain information from a program, operator, installation, or user, as appropriate, to initialize, create, or verify labels.

A mechanism for a system to communicate information to a program, operator, installation, or user, as appropriate, with respect to errors or unusual conditions.

A mechanism for a program, operator, installation, or user, as appropriate, to choose among the alternatives the system makes available.

A mechanism for a program, operator, installation, or user, as appropriate, to invoke a facility the system makes available.

A mechanism to pass control to an installation volume label processing routine to process user volume labels, or to an application program routine to process user file labels if these labels are available in an implementation.

11. *Implementation.* Implementation of this standard is divided into four areas of consideration: acquisition of a tape label processing facility, conformance to this standard, interpretation of this standard, and use of this standard.

11.1 Acquisition of a Tape Label Processing Facility. The provisions of this standard are effective on (the date of approval of this document). All computer systems ordered for Federal use after this date which have the capability of reading and writing 9-track magnetic tapes must implement the specifications in this standard unless a waiver described in Section 12, Waivers, has been obtained. These requirements are applicable to tape label processing facilities developed in-house, acquired as part of an ADP system procurement, acquired by separate procurement, or used under an ADP leasing arrangement. Several of the standards listed in Section 7, Related Documents, provide the specifications for the recorded and unrecorded magnetic tapes.

11.2 Conformance to this Standard. A tape label processing facility that conforms to this

standard must provide for all of the requirements defined in Section 10, Specifications, of this standard. Each implementation must conform to one of the four levels of the standard.

Optional portions of X3.27–1978 are not required for this standard. If the optional portions are implemented, they must be in conformance to X3.27–1978.

11.3 Interpretation of the Standard. NBS will provide for the resolution of questions regarding this standard, and will issue official interpretations of the specifications and requirements.

All questions arising about the interpretation of this standard should be addressed to: Office of ADP Standards Administration, Institute for Computer Sciences and Technology, National Bureau of Standards, Washington, D.C. 20234.

11.4 Use of this standard. This standard must be used as described in Section 9, Applicability.

12. *Waivers.* Heads of agencies may request that the requirements of this standard for the acquisition of a tape label process facility be waived in instances where it can be clearly demonstrated that there are appreciable performance or cost advantages to be gained and that the overall interests of the Federal Government are best served by granting the requested waiver. Such waiver requests will be reviewed by and are subject to the approval of the Secretary of Commerce. The waiver request must address the criteria stated above as the justification for the waiver.

Forty-five days should be allowed for review and response by the Secretary of Commerce. Waiver requests shall be submitted to the Secretary of Commerce, Washington, D.C. 20230, and labeled as a Request for a Waiver to a Federal Information Processing Standard. No agency shall take any action to deviate from the standard prior to the receipt of a waiver approval from the Secretary of Commerce. No agency shall begin any process of implementation or acquisition of a non-conforming tape label processing facility unless it has already obtained such approval.

13. *Special Information.* While not included as a mandatory part of this standard, attention should be given to Appendix D of ANSI X3. 27-1978, "Consideration Associated with Changes and Additions to the Earlier Version" (i.e., X3.27–1969). The information contained in this appendix could be helpful in developing a better understanding of problems usually encountered.

Other standards are being considered or are under development to provide standard labels and file structure for such media as disks and cassettes. When available, they will be reviewed to determine their applicability for adoption as Federal standards.

14. *Where to Obtain Copies.* Copies of this publication are for sale by the National Technical Information Service, U.S. Department of Commerce, Springfield, Virginia 22161. (Sale of the included specifications document is by arrangement with the American National Standards Institute.) When ordering, refer to Federal Information Processing Standards Publication——(NBS-FIPS-PUB——), and title. Payment may be made by check, money order, or deposit account.

Copies of the American National Standard X3.27–1978 may be obtained from the American National Standards Institute, 1430 Broadway, New York, New York 10018. Refer to American National Standard X3.27–1978, Magnetic Tape Labels and File Structure for Information Interchange.

[FR Doc. 79-31217 Filed 10-9-79; 8:45 am]

BILLING CODE 3510-13-M

Committee for the Implementation of Textile Agreements

Amending Import Restraint Level for Certain Man-Made Fiber Textile Products From India

October 4, 1979.

AGENCY: Committee for the Implementation of Textile Agreements.

ACTION: Amending the bilateral agreement with India to increase to 400,641 pounds the level of restraint established for certain man-made fiber furnishings such as blankets, bedspreads, sheets, and tablecloths, among others, in Category 666, produced or manufactured in India and exported to the United States during the twelve-month period which began on January 1, 1979.

(A detailed description of the textile categories in terms of T.S.U.S.A. numbers was published in the Federal Register on January 4, 1978 (43 FR 884), as amended on January 25, 1978 (43 FR 3421), March 3, 1978 (43 FR 8828), June 22, 1978 (43 FR 26773), September 5, 1978 (43 FR 39408), January 2, 1979 (44 FR 94), March 22, 1979 (44 FR 17545) and April 12, 1979 (44 FR 21843)).

SUMMARY: The Governments of the United States and India have exchanged notes, dated August 31 and October 4, 1979, amending the Bilateral Cotton, Wool and Man-Made Fiber Textile Agreement of December 30, 1977, as amended, to increase the designated consultation level established for man-made fiber textile products in Category 666 from 320,513 pounds to 400,641 pounds during the twelve-month period which began on January 1, 1979 and extends through December 31, 1979.

EFFECTIVE DATE: October 11, 1979.

FOR FURTHER INFORMATION CONTACT: Jane C. Bonds, International Trade Specialist, Office of Textiles, U.S. Department of Commerce, Washington, D.C. 20230 (202/377/5423).

SUPPLEMENTARY INFORMATION: On January 9, 1979, there was published in the Federal Register (44 FR 2003) a letter dated January 5, 1979 from the Chairman of the Committee for the Implementation of Textile Agreements to the Commissioner of Customs, which prohibited, effective on January 1, 1979 and for the twelve-month period extending through December 31, 1979, entry into the United States for consumption or withdrawal from warehouse for consumption of certain designated categories of cotton, wool and man-made fiber textile products, produced or manufactured in India and exported to the United States during the twelve-month period which began on January 1, 1979.

In the letter published below the Chairman of the Committee for the Implementation of Textile Agreements directs the Commissioner of Customs to increase to 400,641 pounds the level of restraint previously established for man-made fiber textile products in Category 666, by virtue of an amendment to the bilateral agreement.

Arthur Garel,

Acting Chairman, Committee for the Implementation of Textile Agreements.

Committee for the Implementation of Textile Agreements

Commissioner of Customs,
Department of the Treasury, Washington, D.C. 20229.

Dear Mr. Commissioner: This directive further amends, but does not cancel the directive of January 5, 1979 from the Chairman of the Committee for the Implementation of Textile Agreements which directed you to prohibit, for the twelve-month period beginning on January 1, 1979 and extending through December 31, 1979, entry into the United States for consumption and withdrawal from warehouse for consumption of certain cotton, wool and man-made fiber textile products, produced or manufactured in India.

Under the terms of the Arrangement Regarding International Trade in Textiles, done at Geneva on December 20, 1973, as extended on December 15, 1977; pursuant to the Bilateral Cotton, Wool and Man-Made Fiber Textile Agreement of December 30, 1977, as amended, between the Governments of the United States and India; and in accordance with the provisions of Executive Order 11651 of March 3, 1972, as amended by Executive Order 11951 of January 6, 1977, you are directed, effective on October 11, 1979, to amend the level of restraint previously established for man-made fiber textile products in Category 666, produced or manufactured in India to 400,641 pounds.[1]

The action taken with respect to the Government of India and with respect to imports of man-made fiber textile products from India has been determined by the Committee for the Implementation of Textile Agreements to involve foreign affairs functions of the United States. Therefore, the directions to the Commissioner of Customs, which are necessary for the implementation

[1] The level of restraint has not been adjusted to reflect any imports after December 31, 1978.

of such actions, fall within the foreign affairs exception to the rule-making provisions of 5 U.S.C. 553. This letter will be published in the Federal Register.

Sincerely,

Arthur Garel,

Acting Chairman, Committee for the Implementation of Textile Agreements.

[FR Doc. 79-31230 Filed 10-9-79; 8:45 am]

BILLING CODE 3510-25-M

Charging Overshipments of Certain Man-Made Fiber Textile Products From Mexico

October 4, 1979.

AGENCY: Committee for the Implementation of Textile Agreements.

ACTION: Charging overshipments from 1978 to the ceiling established for woven blouses of man-made fibers in Category 641 from Mexico during the agreement year that began on January 1, 1979. (A detailed description of the textile categories in terms of T.S.U.S.A. numbers was published in the Federal Register on January 4, 1978 (43 FR 884), as amended on January 25, 1978 (43 FR 3421), March 3, 1978 (43 FR 8828), June 22, 1978 (43 FR 26773), September 5, 1978 (43 FR 39408), January 2, 1979 (44 FR 94), March 22, 1979 (44 FR 17545), and April 12, 1979 (44 FR 21843)).

SUMMARY: Under the terms of the Bilateral Cotton, Wool and Man-Made Fiber Textile Agreement of Ferbruary 26, 1979, between the Governments of the United States and Mexico, agreement has been reached to charge prior overshipments of man-made fiber textile products in Category 641 over a three-year period beginning with the agreement period which began on January 1, 1979 and extends through December 31, 1979. Accordingly, 25 percent of the total overshipment, or 33,656 dozen, is being charged to the level for the current year, reducing that level of 231,566 dozen.

EFFECTIVE DATE: October 4, 1979.

FOR FURTHER INFORMATION CONTACT: William J. Boyd, International Trade Specialist, Office of Textiles, U.S. Department of Commerce, Washington, D.C. 20230 (202/377-5423).

SUPPLEMENTARY INFORMATION: On April 4, 1979, there was published in the Federal Register (44 FR 20240) a letter dated March 29, 1979 from the Chairman of the Committee for the Implementation of Textile Agreements to the Commissioner of Customs, which established levels of restraint for certain specified categories of cotton and man-made fiber textile products, produced or manufactured in Mexico, which may be entered into the United States for consumption or withdrawn from warehouse for consumption during the twelve-month period which began on January 1, 1979 and extends through December 31, 1979. As agreed between the two governments, overshipments in Category 641 amounting to 33,656 dozen are being charged to the ceiling for the twelve-month period which began on January 1, 1979. Accordingly, in the letter published below the Chairman of the Committee for the Implementation of Textile Agreements directs the Commissioner of Customs to prohibit entry into the United States for consumption or withdrawal from warehouse for consumption of man-made fiber textile products in Category 641 in excess of an adjusted level of 231,566 dozen during the twelve-month period which began on January 1, 1979.

Arthur Garel,

Acting Chairman, Committee for the Implementation of Textile Agreements.

Committee for the Implementation of Textile Agreements

Commissioner of Customs,
Department of the Treasury, Washington, D.C. 20229.

Dear Mr. Commissioner: This directive further amends, but does not cancel, the directive issued to you on March 29, 1979 by the Chairman, Committee for the Implementation of Textile Agreements, concerning imports into the United States of certain cotton and man-made fiber textile products, produced or manufactured in Mexico.

Under the terms of the Arrangement Regarding International Trade in Textiles done at Geneva on December 20, 1973, as extended on December 15, 1977; pursuant to the Bilateral Cotton, Wool and Man-Made Fiber Textile Agreement of February 26, 1979, between the Governments of the United States and Mexico; and in accordance with the provisions of Executive Order 11651 of March 3, 1972, as amended by Executive Order 11951 of January 6, 1977, you are directed to prohibit, effective on October 4, 1979 and for the twelve-month period beginning on January 1, 1979 and extending through December 31, 1979, entry into the United States for consumption and withdrawal from warehouse for consumption of man-made fiber textile products in Category 641 in excess of an adjusted twelve-month level of restraint of 231,566 dozen.[1]

The action taken with respect to the Government of Mexico and with respect to imports of man-made fiber textile products from Mexico has been determined by the Committee for the Implementation of Textile Agreements to involve foreign affairs functions of the United States. Therefore, the directions to the Commissioner of Customs, which are necessary for the implementation of such actions, fall within the foreign affairs exception to the rule-making provisions of 5 U.S.C. 553. This letter will be published in the Federal Register.

Sincerely,

Arthur Garel,

Acting Chairman, Committee for the Implementation of Textile Agreements.

[FR Doc. 79-31237 Filed 10-9-79; 8:45 am]

BILLING CODE 3510-25-M

[1] The adjusted level of restraint has not been adjusted to reflect any imports after December 31, 1978.

DEPARTMENT OF DEFENSE

Department of the Army

Privacy Act of 1974: Addition of Proposed New System of Records

AGENCY: Department of the Army.

ACTION: Notice of a new system of records.

SUMMARY: The Department of the Army proposes to add a new system of records to its inventory, subject to the Privacy Act of 1974.

DATES: This system shall be effective as proposed without further notice on November 9, 1979, unless comments are received on or before November 9, 1979 which would result in a contrary determination and require republication for further comments.

ADDRESS: Any comments, including written data, views or arguments concerning the action proposed should be addressed to the System Manager identified in the system notice.

FOR FURTHER INFORMATION CONTACT: Mr. Guy B. Oldaker, Administrative Management Directorate, The Adjutant General Center, Department of the Army, Forrestal Building, 1000 Independence Avenue, SW, Washington, DC 20314; Telephone 202/693-0973.

SUPPLEMENTARY INFORMATION: The Department of the Army systems of records notices as prescribed by the Privacy Act of 1974, Title 5 U.S.C., Section 552a. Pub. L. 93-597, have been published in the Federal Register as follows:

FR Doc. 77-28225 (42 FR 50396) September 28, 1977
FR Doc. 78-23953 (43 FR 38070) August 25, 1978
FR Doc. 78-22562 (43 FR 40272) September 11, 1978
FR Doc. 78-26732 (43 FR 42026) September 19, 1978
FR Doc. 78-25819 (43 FR 42374) September 20, 1978
FR Doc. 78-26699 (43 FR 43059) September 22, 1978
FR Doc. 78-26996 (43 FR 43539) September 26, 1978
FR Doc. 78-29130 (43 FR 47604) October 16, 1978
FR Doc. 78-29211 (43 FR 48894) October 19, 1978

FR Doc. 78-29982 (43 FR 49557) October 24, 1978
FR Doc. 78-31795 (43 FR 52512) November 13, 1978
FR Doc. 78-34586 (43 FR 58111) December 12, 1978
FR Doc. 78-35523 (43 FR 59869) December 22, 1978
FR Doc. 79-5788 (44 FR 11105) February 27, 1979
FR Doc. 79-6621 (44 FR 12231) March 6, 1979
FR Doc. 79-8787 (44 FR 17767) March 23, 1979
FR Doc. 79-11350 (44 FR 22140) April 13, 1979
FR Doc. 79-13252 (44 FR 24904) April 27, 1979
FR Doc. 79-15909 (44 FR 29700) May 22, 1979
FR Doc. 79-19958 (44 FR 37654) June 28, 1979
FR Doc. 79-21771 (44 FR 41277) July 16, 1979
FR Doc. 79-22112 (44 FR 41905) July 18, 1979
FR Doc. 79-23622 (44 FR 44920) July 31, 1979
FR Doc. 79-24309 (44 FR 46313) August 7, 1979

The Army has submitted a new system report dated August 31, 1979, for this new record system under the provisions of 5 U.S.C. 552a(o) of the Privacy Act which requires submission of a new system report and in accordance with Office of Management and Budget (OMB) Circular A-108, Transmittal Memoranda No. 1 and No. 3, dated September 30, 1975, and May 17, 1976, respectively, which provide supplemental guidance to Federal agencies regarding the preparation and submission of reports of their intention to establish or alter systems of records under the Privacy Act of 1974. This OMB guidance was set forth in the Federal Register (40 FR 45877) on October 3, 1975.

H. E. Lofdahl,

Director, Correspondence and Directives, Washington Headquarters Services, Department of Defense.

October 3, 1979.

A0506.01jUSAREUR

SYSTEM NAME:

506.01 Employee Screening Program/ Installation Access Files.

SYSTEM LOCATION:

Security Branch, Office of the Deputy Chief of Staff, Intelligence, Office of the U.S. Commander, Berlin, Germany.

CATEGORIES OF INDIVIDUALS COVERED BY THE SYSTEM:

All civilian applicants for and/or employees in positions in United States (U.S.) Forces activities in the Berlin Command, other than Department of Defense (DOD) civilians. Persons included are of various nationalities, paid from both appropriated funds, as well as from funds provided by the German Occupation Costs Office who are administered under the Berlin Tariff Agreement, which governs employment of the local national workforce. Non-U.S. citizen applicants for and holders of passes authorizing unofficial access to closed U.S. Forces installations and facilities in Berlin.

CATEGORIES OF RECORDS IN THE SYSTEM:

Cards or paper files contain name; date and place of birth; social security number (SSN) for U.S. citizens; address; personal identity documents by type and serial number; employing or potential employing agency; type of position held or applied for and related information; dates security screening action initiated and completed; list of investigative agencies' files checked with results and disposition of case.

AUTHORITY FOR MAINTENANCE OF THE SYSTEM:

Title 10 U.S.C., Section 3012 and Title 50 U.S.C.

ROUTINE USES OF RECORDS MAINTAINED IN THE SYSTEM, INCLUDING CATEGORIES OF USERS AND THE PURPOSES OF SUCH USES:

To determine suitability for employment and to grant access to closed military installations as warranted. Information on security screening actions is provided to DOD and U.S. State Department law enforcement investigative agencies in Berlin for use in criminal/security investigative purposes, when warranted.

POLICIES AND PRACTICES FOR STORING, RETRIEVING, ACCESSING, RETAINING, AND DISPOSING OF RECORDS IN THE SYSTEM:

STORAGE:

Cards are stored in file boxes, paper records in file folders.

RETRIEVABILITY:

Alphabetically by last name.

SAFEGUARDS:

Records are maintained in locked areas, accessible only by authorized personnel who are properly screened, cleared, and trained. Buildings are enclosed in a compound to which access is controlled at all times.

RETENTION AND DISPOSAL:

Files pertaining to U.S. citizens are destroyed on transfer or separation of individual. Files on non-U.S. employees on whom no derogatory information is developed during their tenure of service are held in the inactive file for 6 months after termination of employment, then destoyed; derogatory files are destroyed 2 years after termination. Files pertaining to applicants who are not accepted are destroyed upon notification by appropriate Civilian Personnel Officer. Files pertaining to non-U.S. citizen applicants or holders of installation passes are disposed of in accordance with the following schedule: When file contains no or only minor derogatory information, destroyed upon notification from responsible official of surrender of pass. When pass is denied or withdrawn for cause, it is placed in the inactive file, held for 3 years, and then destroyed.

SYSTEM MANAGER(S) AND ADDRESS:

Deputy Chief of Staff, Intelligence, Office of the U.S. Commander, Berlin, APO New York 09742.

NOTIFICATION PROCEDURE:

Information may be obtained from: Deputy Chief of Staff, Intelligence Office of the U.S. Commander, Berlin APO New York 09742.

RECORD ACCESS PROCEDURES:

Requests from individuals should be addressed to: Commander, U.S. Army, Berlin, ATTN: AEBA-IC(S), APO New York 09742.

Written requests for information should contain the full name, date and place of birth, SSN (where appropriate), and current address of the individual.

For personal visits, the individual should be able to provide acceptable identification such as national passport, government identity document, employing official's identification card, and give verbal information that could be verified with his/her "case" folder.

CONTESTING RECORD PROCEDURES:

The Army's rules for access to records and for contesting contents and appealing initial determinations are contained in AR 340-21 (32 CFR Part 505).

RECORD SOURCE CATEGORIES:

Application forms from the individual, employee personnel records, files of various government investigative agencies, previous employers, financial institutions, educational institutions, and research notes/documents from records custodians.

SYSTEMS EXEMPTED FROM CERTAIN PROVISIONS OF THE ACT:

None.

[FR Doc. 79-31193 Filed 10-9-79; 8:45 am]

BILLING CODE 3710-08-M

DELAWARE RIVER BASIN COMMISSION

Comprehensive Plan; Public Hearing

Notice is hereby given that the Delaware River Basin Commission will hold a public hearing on Tuesday, October 16, 1979, commencing at 2:00 p.m. The hearing will be a part of the Commission's regular October business meeting which is open to the public.

Both the hearing and the meeting will be held in the ballroom of the Pocono Manor Inn, Pocono Manor, Pennsylvania. The subjects of the hearing will be as follows:

A. A proposal that the Fifteenth Annual Water Resources Program adopted by the Commission on October 25, 1978, be readopted and continued as the Sixteenth Annual Water Resources Program in accordance with the requirements of Section 13.2 of the Compact.

B. A proposal to amend the Comprehensive Plan pursuant to Article II of the Compact and/or as project approvals pursuant to Section 3.8 of the Compact.

1. *Camden County Municipal Utilities Authority (D-79-47 CP).* A project to install disinfection facilities at the city's Baldwins Run Sewage Treatment Plant in Camden County, N.J. Chlorination will be used to provide disinfection of a sewage flow of about 3.9 million gallons per day. Treated effluent discharges to Baldwins Run, a tributary of the Delaware River.

2. *Palmer Water Company (D-79-64 CP).* A well water supply project to augment public water supplies in the Borough of Palmerton, Carbon County, Pa. Up to a maximum of 70,000 gallons per day will be transferred to the Palmer Water Company from an existing well of the New Jersey Zinc Company.

3. *Interstate Waste Removal Company, Inc. (D-79-2).* A project to neutralize stormwater discharge at the Company's sanitary landfill project in Bordentown Township, Burlington County, New Jersey. Ponded stormwater will be treated with lime and discharged at a rate of about 190,000 gallons per day through Crystal Lake to the Delaware River.

4. *Albert N. Johnson (D-79-27).* A well water supply project at the subject farm in Upper Deerfield Township, Cumberland County, N.J. The applicant requests approval of a maximum withdrawal of 700,000 gallons per day which will be used for irrigation of crops.

5. *William N. Brooks, Jr. (D-79-29).* A well water supply project at the subject farm in Upper Pittsgrove Township, Salem County, N.J. The applicant requests approval of a maximum withdrawal of 380,000 gallons per day which will be used for irrigation of crops.

6. *John A. Roebling Steel Corp. (D-79-42).* A surface water withdrawal and wastewater discharge required by reactivation of the company's electric furnace and steel rolling operations in Florence Township, Burlington County, N.J. Water will be withdrawn from the Delaware River and discharged back to the river following treatment.

Documents relating to the above-listed projects may be examined at the Commission's offices. Persons wishing to testify at this hearing are requested to register with the Secretary prior to the date of the hearing.

W. Brinton Whitall,
Secretary.

October 2, 1979.

[FR Doc. 79-31149 Filed 10-9-79; 8:45 am]
BILLING CODE 6360-01-M

ENVIRONMENTAL PROTECTION AGENCY

[FRL 1336-1]

California State Motor Vehicle Pollution Control Standards; Public Hearing

AGENCY: Environmental Protection Agency (EPA).

ACTION: Notice of public hearing on amendments to California emission standards and test procedures for new motor vehicles.

SUMMARY: The California Air Resources Board (CARB) has notified EPA that CARB amended regulations on emission control systems test procedures and emission standards for motor vehicles sold in California. EPA will hold a public hearing on the twenty-fourth and twenty-fifth of October 1979, to consider waiver of Federal preemption under section 209(b) of the Clean Air Act, as amended, for California to enforce its emission standards and test procedure regulations.

DATES: Hearings October 24 and October 25, 1979.

ADDRESS: Copies of all materials relevant to the hearing are available for public inspection during normal working hours (8:00 a.m. to 4:30 p.m.) at: U.S. Environmental Protection Agency, Public Information Reference Unit, Room 2922 (EPA Library), 401 M Street SW., Washington, D.C. 20460.

FOR FURTHER INFORMATION CONTACT: Maureen Smith or Paul Stern, Attorney-Advisors, Manufacturers Operations Division, U.S. Environmental Protection Agency, Washington, D.C. 20460. (202) 472-9421.

SUPPLEMENTARY INFORMATION: Section 209(a) of the Clean Air Act, as amended, 42 U.S.C. 7543(a) ("Act"), provides in part: "No State or any political subdivision thereof shall adopt or attempt to enforce any standard relating to control of emissions from new motor vehicles or new motor vehicle engines subject to this part * * * [or] require certification, inspection, or any other approval relating to the control of emissions * * * as condition precedent to the initial retail sale, titling (if any), or registration of such motor vehicle, motor vehicle engine, or equipment."

Section 209(b)(1) of the Act requires the Administrator, after notice and opportunity for public hearing, to waive application of the prohibitions of section 209 to any State which had adopted standards (other than crankcase emission standards) for the control of emissions from new motor vehicles or new motor vehicles engines prior to March 30, 1966, if the State determines that the State standards will be, in the aggregate, at least as protective of public health and welfare as applicable Federal standards. The Administrator must grant a waiver unless he finds that: (1) The determination of the State is arbitrary and capricious, (2) The State does not need the State standards to meet compelling and extraordinary conditions, or (3) The State standards and accompanying enforcement procedures are not consistent with section 202(a) of the Act.

In a July 5, 1979, letter to the Administrator, CARB notified EPA that CARB had taken several actions to revise California's new motor vehicle emissions control program. CARB requested a waiver of Federal preemption for the following items:

(i) Amendments to assembly-line procedures for 1979 model year and 1980 model year passenger cars, light-duty trucks and medium-duty vehicles; [1]

(ii) Amendments to new vehicle compliance test procedures for 1979 and later model years; [2] and

(iii) Amendments to exhaust emission standards and test procedures for 1980 model year and 1981 and subsequent model year passengers cars, light-duty trucks and medium-duty vehicles.[3]

Accordingly, a public hearing will be convened at the U.S. Environmental Protection Agency Regional Office (Region IX), Nevada Room, Sixth Floor, 215 Freemont St., San Francisco, California, on the twenty-fourth and twenty-fifth of October 1979 (9:00 a.m. to 5:00 p.m.).

[1] Section 2057 and 2058, Title 13, California Administrative Code; "California Assembly-Line Test Procedures for 1979 Model Year Passenger Cars, Light-Duty Trucks and Medium-Duty Vehicles," as amended May 9, 1979; and "California Assembly-Line Test Procedures for 1980 Model Year Passenger Cars, Light-Duty Trucks and Medium-Duty Vehicles," as amended May 9, 1979.

[2] Sections 2101(a) and 2101(b), Title 13 California Administrative Code and "California New Vehicle Compliance Test Procedures," as amended May 9, 1979.

[3] Sections 1960 and 1960.1, Title 13, California Administrative Code; "California Exhaust Emission Standards and Test Procedures for 1980 Model Passenger Cars, Light-Duty Trucks, and Medium-Duty Vehicles," as amended May 22, 1979; and "California Exhaust Emission Standards and Test Procedures for 1981 and Subsequent Model Passenger Cars, Light-Duty Trucks, and Medium-Duty Vehicles," as amended May 22, 1979.

Any person desiring to make a statement at the hearing or to submit material for the hearing record should file a notice of such intention along with 10 copies of the proposed statement and other relevant material by October 15, 1979, with Ms. Lillian Hibbs, EPA Public Information Reference Unit, 401 M St. SW., Washington, D.C. 20460. In addition, if feasible, 25 copies of such statement or material for the hearing record should be submitted to the Presiding Officer at the time of the public hearing.

The agenda for the public hearing will be as follows: Wednesday (October 24, 1979)—Items (i), (ii) and (iii) and, if necessary, Thursday (October 25, 1979)—Item (iii).

PROCEDURES: Since the public hearing is designed to give interested persons an opportunity to participate in this proceeding by the presentation of data, views, arguments, or other pertinent information, there are no adversary parties as such. Statements by the participants will not be subject to cross-examination. The Presiding Officer is authorized to strike from the record statements which he deems irrelevant or repetitious and to impose reasonable limits on the duration of the statement of any witness.

Presentations by participants should be limited to the following considerations:

(1) Whether California's determination that the standards will be at least as protective of public health and welfare as applicable Federal standards and regulations is arbitrary and capricious;

(2) Whether California needs the standards to meet compelling and extraordinary conditions;

(3) Whether California amendments are consistent with section 202(a) of the Act; and

(4) With regard to accompanying enforcement procedures, whether these procedures would cause California's underlying standards, in the aggregate, to be less protective than the corresponding Federal standards.

In order to assure full opportunity for the presentation of data, views and arguments by participants, the Presiding Officer will, upon request of the participants, allow a reasonable time after the close of the hearing for the submission of written data, views, arguments or other pertinent information to be included as part of the hearing record.

A verbatim record of the proceeding will be made and will be made available for public inspection at the EPA Public Information Reference Unit. A copy of the transcript may be requested from the reporter during the hearing and will be made at the expense of the person so requesting. The determination of the Administrator on the action to be taken on CARB's amendments is not required to be made solely on the record of the public hearing. Other scientific, engineering and pertinent information not presented at the hearing also may be considered. This information will be available for public inspection.

Dated: October 5, 1979.

Jeffrey G. Miller,

Acting Assistant Administrator for Enforcement.

[FR Doc. 79-31367 Filed 10-9-79; 8:45 am]

BILLING CODE 6560-01-M

FEDERAL COMMUNICATIONS COMMISSION

[Report No. A-3]

AM Broadcast Applications Accepted for Filing and Notification of Cut-Off Date

Released: October 3, 1979; Cutoff Date: November 21, 1979.

Notice is hereby given that the applications listed in the attached appendix are hereby accepted for filing. They will be considered to be ready and available for processing after November 21, 1979. An application, in order to be considered with any application appearing on the attached list or with any other application on file by the close of business on November 21, 1979, which involves a conflict necessitating a hearing with any application on this list, must be substantially complete and tendered for filing at the offices of the Commission in Washington, D.C. not later than the close of business on November 21, 1979.

Petitions to deny any application on this list must be on file with the Commission not later than the close of business on November 21, 1979.

Federal Communications Commission.

William J. Tricarico,

Secretary.

BP-21,097 (KGEZ), Kalispell, Montana, Skyline Broadcasters, Inc., Has: 600 kHz, 1 kW, DA-2, U, Req: 600 kHz, 1 kW, 5 kW-LS, DA-2, U

BP-21,223 (KXQR), Clovis, California, Carl T. Jones, tr/as Clovis Broadcasters, Has: 790 kHz, 0.5 kW, DA-Day, Req: 790 kHz, 5kW, DA-Day

BP-781103AL (KVEG), North Las Vegas, Nevada, Broadcast Associates, Inc., Has: 1400 kHz, 250 W, 1 kW-LS, U (Henderson), Req: 1410kHz, 5 kW, DA-N, U (North Las Vegas)

BP-781116AJ (WMMW), Meridan, Connecticut, Sound Media, Inc., Has: 1470 kHz, 1kW, Day, Req: 1470 kHz, 5 kW, 2.5 kW-LS, DA-2, U

BP-790116AE (WYRU), Red Springs, North Carolina, Carolina Sunbelt Radio, Inc., Has: 1510 kHz, 1 kW (500 W-CH), Day, Req: 1520 kHz, 5kW (1 kW-CH), Day

BP-790306AC (WKSK), West Jefferson, North Carolina, Caddell Broadcasting, Inc., Has: 580 kHz, 500 W, Day, Req: 580 kHz, 500 W, DA-N, U

BP-790328AV (WSML), Graham, North Carolina, Acme Communications, Inc., Has: 1190 kHz, 500 W, DA-Day, Req: 1190 kHz, 1 kW (500 W-CH), DA-2, Day

BP-790330AA (new), Pearl City, Hawaii, Alan Adams, Req: 1380 kHz, 5 kW, U

BP-790404AA (new), Price, Utah, Dart, Inc., Req: 1080 kHz, 2.5 kW, Day

BP-790406AB NEW, Yucca Valley, California, Hesson-London-Chester Associates, Req: 1520 kHz, 1 kW, Day

BP-790420AD (KCAL), Redlands, California, Southwest Broadcasting Company, Inc., Has: 1410 kHz, 500 W, 5 kW-LS, DA-N, U, Req: 1410 kHz, 1 kW, 5 kW-LS, DA-N, U

BP-790430AF (new), Harvey, North Dakota, Shamrock Communications, Inc., Req: 1540 kHz, 500 W, Day

BP-790507AE (KUXX), Palmade, California, Bates Hall Communications, Inc., Has: 1470 kHz, 5 kW, Day, Req: 1470 kHz, 500 W, 5 kW-LS, DA-N, U

BP-790627AB (WPVA), Colonial Heights, Virginia, Atlantic Broadcasting Corp., Has: 1290 kHz, 5 kW, Day (Petersburg-Colonial Heights), Req: 1290 kHz, 5 kW, Day (Colonial Heights)

[FR Doc. 79-31153 Filed 10-9-79; 8:45 am]

BILLING CODE 6712-01-M

[Report No. A-5]

FM Broadcast Applications Accepted for Filing and Notification of Cut-Off Date

Released: October 2, 1979.

Cutoff Date: November 15, 1979.

Notice is hereby given that the applications listed in the attached appendix are hereby accepted for filing. They will be considered to be ready and available for processing after November 15, 1979. An application, in order to be considered with any application appearing on the attached list or with any other application on file by the close of business on November 15, 1979 which involves a conflict necessitating a hearing with any application on this list, must be substantially complete and tendered for filing at the offices of the Commission in Washington, D.C., not later than the close of business on November 15, 1979.

Petitions to deny any application on this list must be on file with the Commission not later than the close of business on November 15, 1979.

Federal Communications Commission.

William J. Tricarico,

Secretary.

BPH-11023 (new), Astoria, Oregon, Kast Broadcasting, Inc. Req: 92.9 mHz; Channel No. 225C, ERP: 97.9 kW; HAAT: 624.8 ft.

BPH-790410AD (new), Tisbury, Massachusetts, Martha's Vineyard Communications, Inc. Req: 92.7 mHz; Channel No. 224A, ERP: 3 kW; HAAT: 284 ft.

BPH-790413AM (WMIL), Waukesha, Wisconsin, WMIL, Inc. Has: 106.1 mHz; Channel No. 291B, ERP: 19.5 kW; HAAT: 180 ft. (lic.); Req: 106.1 mHz; Channel No. 291B, ERP: 50 kW; HAAT: 500 ft.

BPH-790418AC (new), Taylor, Texas, Tafoya Broadcast Company, Inc. Req: 92.1 mHz; Channel No. 221A, ERP: 3 kW; HAAT: 300 ft.

BPH-7904119AC (KLAW), Lawton, Oklahoma, KLAW Broadcasting, Inc. Has: 101.5 mHz; Channel No. 268C, ERP: 28.5 kW; HAAT: 117 ft. (lic.); Req: 101.5 mHz; Channel No. 268C, ERP: 100 kW; HAAT: 585 ft.

BPH-790424AB (WDEK), DeKalb, Illinois, DeKalb Radio Studios, Inc. Has: 92.5 mHz; Channel No. 223B, ERP: 9.5 kW; HAAT: 155 ft. (lic.); Req: 92.5 mHz; Channel No. 223B, ERP: 20 kW; HAAT: 487.5 ft.

BPH-790508AA (KKEG), Fayetteville, Arkansas, Little Chief B/C Co. Fayetteville, Inc. Has: 92.1 mHz; Channel No. 221A, ERP: 3 kW; HAAT: 190 ft. (lic.); Req: 92.1 mHz; Channel No. 221A, ERP: 1.15 kW; HAAT: 455 ft.

BPH-790509AA (new), Fort Walton Beach, Florida, Miracle Strip Communications, Inc. Req: 96.5 mHz; Channel No. 243C, ERP: 100 kW; HAAT: 525 ft.

BPH-790516AB (WJOX-FM), Jackson, Michigan, Patten Broadcasting-Jackson, Inc. Has: 106.1 mHz; Channel No. 291B, ERP: 20 kW; HAAT: 180 ft. (lic.); Req: 106.1 mHz; Channel No. 291B, ERP: 50 kW; HAAT: 500 ft.

BPH-790518AD (new), Yankton, South Dakota, Sorenson Broadcasting Corporation. Req: 100.3 mHz; Channel No. 262C, ERP: 30 kW; HAAT: 256 ft.

BPH-790601AG (WGRK-FM), Greensburg, Kentucky, Veer Broadcasting Co., Inc. Has: 103.1 mHz; Channel No. 276A, ERP: 3 kW; HAAT: 175 ft. (lic.); Req: 103.1 mHz; Channel No. 276A, ERP: 2 kW; HAAT: 370 ft.

BPH-7900604AB (new), Burney, California, Thomas C. and Essie L. Collins. Req: 106.1 mHz; Channel No. 291C, ERP: 25 kW; HAAT: 1380 ft.

BPH-790608AK (new), Kaplan, Louisiana, Cajun Communications, Inc. Req: 97.7 mHz; Channel No. 249A, ERP: 1.82 kW; HAAT: 390 ft.

BPH-790611A1 (KZAP), Sacramento, California, New Day Broadcasting Company, Inc., Has: 98.5 Mhz; Channel No. 253B, ERP: 50 Kw; HAAT: 250 ft. (lic.) Req: 98.5 Mhz; Channel No. 253B, ERP: 50 Kw; HAAT: 500 ft.

BPH-790612AF (new), Sterling, Colorado, BBG Enterprises, Inc. Req: 105.5 Mhz; Channel No. 288A, ERP: 3 Kw; HAAT: 86 ft.

BPH-790614A1 (new), Lexington, Mississippi, Donald G. Manuel. Req: 106.3 Mhz; Channel No. 292A, ERP: 3 Kw; HAAT: 300 ft.

BPH-790618AK (new), Hot Springs, South Dakota, Sorenson Broadcasting Corp. Req: 96.7 Mhz; Channel No. 244A, ERP: 1.4 Kw; HAAT: 440 ft.

BPH-790619AA (WRUM-FM), Rumford, Maine, Stone Communications, Inc. Has: 96.3 Mhz; Channel No. 242C, ERP: 30 Kw; HAAT: 36 ft. (lic). Req: 96.3 Mhz; Channel No. 242C, ERP: 47.5 Kw; HAAT: 1435 ft.

BPH-790625AB (new), Rock Springs, Wyoming, Imperial Broadcasting Co., Inc. Req: 99.5 Mhz; Channel No. 258C, ERP: 94 Kw; HAAT: 1630 ft.

BPH-790627AC (new), Hayward, Wisconsin, Inland Coimmunications Corporation. Req: 101.7 Mhz; Channel No. 269A, ERP: 1.45 Kw; HAAT: 410 ft.

BPH-790627AD (new), Rome, New York, CLW Communications Group. Req: 102.5 Mhz; Channel No. 273B, ERP: 50 Kw; HAAT: 404 ft.

BMPH-780928AE (KWRO-FM), Coquille, Oregon, KWRO Broadcasting Corporation. Has: 102.3 Mhz; Channel No. 272A, ERP: 3 Kw; HAAT: 17 ft. (CP.) Req: 102.3 Mhz; Channel No. 272A, ERP: .28 Kw; HAAT: 878 ft.

BPED-7900515AA (WIUM), Macomb, Illinois, Western Illinois University. Has: 91.3 Mhz; Channel No. 217B, ERP: 7.2 Kw; HAAT: 275 ft. (lic.) Req: 91.3 Mhz; Channel No. 217B, ERP: 7.2 Kw; HAAT: 470 ft.

BPED-790518AE (KCDC), Longmont, Colorado, St. Vrain Valley School District. Has: 90.7 Mhz; Channel No. 214D, TPO: .01 Kw; (lic.) Req: 90.7 Mhz; Channel No. 214A, ERP: .100 Kw; HAAT: 268 ft.

BPED-790612AC (KCRW), Santa Monica, California, Santa Monica Community College Dist. Has: 89.9 Mhz; Channel No. 210B, ERP: 26 Kw; HAAT: —100 ft. (lic.) Req: 89.9 Mhz; Channel No. 210B, ERP: 6.9 Kw; HAAT: 1110 ft.

BPED-79026AG (WVPH), Piscataway, New Jersey, Piscataway High School. Has: 90.3 Mhz; Channel No. 212D, TPO: .01 Kw; (lic.) Req: 90.3 Mhz; Channel No. 212A, ERP: .2 Kw; HAAT: 7.6 ft.

BMPED-790625AF (WOEL-FM), Elkton, Maryland, Maranatha Bible Institute, Inc., Has: 88.3 Mhz; Channel No. 202A, ERP: 3 Kw; HAAT: 260 ft. (CP.) Req: 89.9 Mhz; Channel No. 210A ERP: 3 Kw; HAAT: 260 ft.

[FR Doc. 79-31154 Filed 10-9-79; 8:45 am]
BILLING CODE 6712-01-M

FOREIGN CLAIMS SETTLEMENT COMMISSION

Privacy Act of 1974; Systems of Records: Annual Publication

The purpose of this document is to give notice that the Privacy Act Systems of Records identified in a notice published at 42 FR 48152, September 22, 1977, with an amending notice published at 42 FR 57346, November 2, 1977, continues in effect without change except for amendments to the system designated FCSC-4, which system with amendments thereto is republished in full as follows:

FCSC—4

SYSTEM NAME:

China, Claims Against FCSC.

SYSTEM LOCATION:

Washington National Records Center, 4205 Suitland Road, Washington, DC 20409. Alphabetical Index to system maintained at Foreign Claims Settlement Commission, 1111 20th St., NW, Wash., DC 20579.

CATEGORIES OF INDIVIDUALS COVERED BY THE SYSTEM:

US nationals who suffered property losses, death and disability in mainland China arising since Oct. 1, 1949 and before 11 May, 1979.

CATEGORIES OF RECORDS IN THE SYSTEM:

Claim application form containing name and address of claimant and representative, if any; date and place of birth or naturalization of claimant; nature and amount of claim; description, ownership and value of property; and evidence to support claim.

AUTHORITY FOR MAINTENANCE OF THE SYSTEM:

Titles I and V, International Claims Settlement Act of 1949, as amended

ROUTINE USES OF RECORDS MAINTAINED IN THE SYSTEM, INCLUDING CATEGORIES OF USERS AND THE PURPOSES OF SUCH USES:

Adjudication of claim, issuance of decisions as to the validity and amounts of claims and issuance of certifications to each individual claimant as to amounts determined by FCSC officials and personnel. Such amounts and copies of FCSC decisions are certified to the Secretary of State and to the Secretary of the Treasury. Law Enforcement: in the event that a system of records maintained by FCSC to carry out its functions indicates a violation or potential violation of law, whether civil, criminal or regulatory in nature, and whether arising by general statute, particular program statute, or by regulation, rule or order issued pursuant thereto, the relevant records in the system of records may be referred, as a routine use, to the appropriate agency, whether federal, state local or foreign, charge with the responsibility of investigating or prosecuting such violation or charged with enforcing or implementing the statute, or rule, regulation or order issued pursuant thereto.

The information contained in this system of records will be disclosed to the Office of Management and Budget, in connection with the review of private relief legislation as set forth in OMB Circular No. A-19, at any stage of the

legislative coordination and clearance process as set forth in that circular.

A record from this system of records may be disclosed as a routine use to a member of Congress or to a congressional staff member in response to an inquiry of the congressional office made at the request of the individual about whom the record is maintained.

POLICIES AND PRACTICES FOR STORING, RETRIEVING, ACCESSING, RETAINING, AND DISPOSING OF RECORDS IN THE SYSTEM:

STORAGE:

Paper records maintained in file folders.

RETRIEVABILITY:

Filed numerically by claim number. File folders retrieved from Records Center by claim number. Alphabetical index used for indentification of claim.

SAFEGUARDS:

Under GSA security safeguards at Washington National Records Center.

RETENTION AND DISPOSAL:

Records maintained under 5 U.S.C. 301 Disposal of records will be made in accordance with 44 U.S.C. 3301–3314 when such records are determined no longer useful.

SYSTEM MANAGER(S) AND ADDRESS:

Executive Director, Foreign Claims Settlement Commission, 111 20th St., NW, Wash., DC 20579. 202/653–6156.

NOTIFICATION PROCEDURE:

Same as the above.

CONTESTING RECORD PROCEDURES:

Same as the above.

RECORD SOURCE CATEGORIES:

Individual on whom the record is maintained.

Dated at Washington, D.C., on October 1, 1979.

Wayland D. McClellan,

General Counsel.

[FR Doc. 79-31192 Filed 10-9-79; 8:45 am]

BILLING CODE 6770-01-M

FEDERAL RESERVE SYSTEM

Bank Holding Companies; Proposed De Novo Nonbank Activities

The bank holding companies listed in this notice have applied, pursuant to section 4(c)(8) of the Bank Holding Company Act (12 U.S.C. § 1843(c)(8)) and section 225.4(b)(1) of the Board's Regulation Y (12 CFR § 225.4(b)(1)), for permission to engage *de novo* (or continue to engage in an activity earlier commenced *de novo*), directly or indirectly, solely in the activities indicated, which have been determined by the Board of Governors to be closely related to banking.

With respect to each application, interested persons may express their views on the question whether consummation of the proposal can "reasonably be expected to produce benefits to the public, such as greater convenience, increased competition, or gains in efficiency, that outweigh possible adverse effects, such as undue concentration of resources, decreased or unfair competition, conflicts of interest, or unsound banking practices." Any comment on an application that requests a hearing must include a statement of the reasons a written presentation would not suffice in lieu of a hearing, identifying specifically any questions of fact that are in dispute, summarizing the evidence that would be presented at a hearing, and indicating how the party commenting would be aggrieved by approval of that proposal.

Each application may be inspected at the offices of the Board of Governors or at the Federal Reserve Bank indicated for that application. Comments and requests for hearings should identify clearly the specific application to which they relate, and should be submitted in writing and, except as noted, received by the appropriate Federal Reserve Bank not later than October 29, 1979.

A. *Federal Reserve Bank of Boston*, 30 Pearl Street, Boston, Massachusetts 02106:

Industrial National Corporation, Providence, Rhode Island (financing and insurance activities; Texas): to continue to engage, through its indirect subsidiary, Kensington Mortgage and Finance Corporation, in the origination and sale of loans for the purchase of mobile homes and the servicing of mobile home loans; and to act as agent for the sale of property and casualty insurance sold in connection with extensions of credit. These activities would be continued following a relocation of Applicant's indirect subsidiary from Houston, Texas to Austin, Texas, serving southeast and central Texas.

B. *Federal Reserve Bank of San Francisco*, 400 Sansome Street, San Francisco, California 94120:

1. Bankamerica Corporation, San Francisco, California (financing and insurance activities; California): to engage, through its subsidiary, FinanceAmerica Corporation, in the activity of making or acquiring for its own account, and servicing, loans and other extensions of credit such as would be made or acquired by a finance company, including making consumer installment loans, purchasing installment sales finance contracts, making loans and other extensions of credit to small businesses and making loans secured by real and personal property; and acting as agent for the sale of life, accident and health, and property insurance directly related to its extensions of credit. These activities would be conducted from an office in Whittier, California, serving the State of California. Comments on this application must be received by October 26, 1979.

2. Bankamerica Corporation, San Francisco, California (financing and insurance activities; California): to engage, through its subsidiary, FinanceAmerica Corporation in the activity of making or acquiring for its own account, and servicing, loans and other extensions of credit such as would be made or acquired by a finance company, including making consumer installment loans, purchasing installment sales finance contracts, making loans and other extensions of credit to small businesses and making loans secured by real and personal property; and acting as agent for the sale of life, accident and health, and property insurance directly related to its extensions of credit. These activities would be conducted from an office in Westlake Village, California, serving the State of California. Comments on this application must be received by October 26, 1979.

C. *Other Federal Reserve Banks*: None.

Board of Governors of the Federal Reserve System, September 28, 1979.

Griffith L. Garwood,

Deputy Secretary of the Board.

[FR Doc. 79-31178 Filed 10-9-79; 8:45 am]

BILLING CODE 6210-01-M

Bank Holding Companies; Proposed De Novo Nonbank Activities

The bank holding companies listed in this notice have applied, pursuant to section 4(c)(8) of the Bank Holding Company Act (12 U.S.C. § 1843(c)(8)) and section 225.4(b)(1) of the Board's Regulation Y (12 CFR § 225.4(b)(1)), for permission to engage *de novo* (or continue to engage in an activity earlier commenced *de novo*), directly or indirectly, solely in the activities indicated, which have been determined by the Board of Governors to be closely related to banking.

With respect to each application, interested persons may express their views on the question whether consummation of the proposal can "reasonably be expected to produce

benefits to the public, such as greater convenience, increased competition, or gains in efficiency, that outweigh possible adverse effects, such as undue concentration of resources, decreased or unfair competition, conflicts of interest, or unsound banking practices." Any comment on an application that requests a hearing must include a statement of the reasons a written presentation would not suffice in lieu of a hearing, identifying specifically any questions of fact that are in dispute, summarizing the evidence that would be presented at a hearing, and indicating how the party commenting would be aggrieved by approval of that proposal.

Each application may be inspected at the offices of the Board of Governors or at the Federal Reserve Bank indicated for that application. Comments and requests for hearings should identify clearly the specific application to which they relate, and should be submitted in writing and, except as noted, received by the appropriate Federal Reserve Bank not later than November 5, 1979.

A. *Federal Reserve Bank of New York,* 33 Liberty Street, New York, New York 10045:

1. Chemical New York Corporation, New York, New York (financing and insurance activities; Indiana): to engage, through its subsidiary, Sunamerica Corporation, in operating a finance company, including making or acquiring for its own account loans and other extensions of credit and servicing loans and other extensions of credit. Such activities will include, but not be limited to, making or acquiring loans to customers; purchasing installment sales finance contracts; making or acquiring loans and other extensions of credit to businesses (including inventory financing); making or acquiring extensions of credit secured by personal property lease contracts; acting as agent or broker for the sale of credit life; and credit accident and health insurance, directly related to its extensions of credit. These activities would be conducted from an office in Fort Wayne, Indiana, serving Allen County, in which it is located and portions of certain contiguous counties, including DeKalb in Indiana, and Defiance and Paulding in Ohio. Any credit insurance in connection withe the proposed activities would be reinsured through Sun States Life and/or Great Lakes Insurance Companies, indirect subsidiaries of applicant. Comments on this application must be received by October 29, 1979.

2. First Bancgroup-Alabama, Inc., Mobile, Alabama (insurance activities; Alabama): to continue to engage, through its subsidiary, FBG Insurance Agency, Inc., in the following activities: acting as insurance agent or broker in the office of the Eastern Shore National Bank, a subsidiary of the holding company, with respect to: (1) any insurance for the holding company's banking subsidiaries; (2) any insurance that (a) is directly related to an extension of credit by a bank or a bank-related firm of the kind described in the Board's Regulation Y, including credit life, credit accident and health, and property damage insurance or (b) is directly related to the provision of other financial services by a bank or such bank-related firm. These activities will continue to be conducted from an office in Daphne, Alabama and the service area is the western portion of Baldwin County. Comments on this application must be received by November 2, 1979.

B. *Federal Reserve Bank of San Francisco,* 400 Sansome Street, San Francisco, California 94120:

1. Western Bancorporation, Los Angeles, California (insurance activities; Arizona, California, Colorado, Idaho, Montana, Nevada, New Mexico, Oregon, Utah, Washington, and Wyoming): to engage, through its subsidiary, Western Bancorp Insurance Company, Los Angeles, California, in the sale, as agent or broker, of credit life insurance and credit accident and health insurance and property and casualty insurance directly related to extensions of credit or the provision of financial services (servicing loans and other extensions of credit) by the Applicant and its affiliates. These activities would be conducted from all of the offices of Applicant's affiliates whose main offices are located as follows: Western Bancorp Data Processing Company, Torrance, California; Western Asset Management Company, Los Angeles, California; Western Bancorp Mortgage Company, Denver, Colorado; First National Bank of Arizona, Phoenix, Arizona; United California Bank, Los Angeles, California; The American National Bank of Denver, Denver, Colorado; Continental National Bank, Englewood, Colorado; First National Bank, Fort Collins, Fort Collins, Colorado; Bank of Idaho, N.A., Boise, Idaho; Bank of Glacier County, Cut Bank, Montana; The Conrad National Bank of Kalispell, Kalispell, Montana; Montana Bank, Great Falls, Montana; Bank of Nevada, Las Vegas, Nevada; First National Bank of Nevada, Reno, Nevada; Bank of New Mexico, Albuquerque, New Mexico; First State Bank of Gallup, Gallup, New Mexico; New Mexico Bank and Trust Company, Hobbs, New Mexico; Roswell State Bank, Roswell, New Mexico; Santa Fe National Bank, Santa Fe, New Mexico; First National Bank of Oregon, Portland, Oregon; Walker Bank & Trust Company, Salt Lake City, Utah; Pacific National Bank of Washington, Seattle, Washington; First National Bank of Casper, Casper, Wyoming; The First National Bank of Laramie, Laramie, Wyoming; The First National Bank of Riverton, Riverton, Wyoming. These offices will serve the eleven western states of Arizona, California, Colorado, Idaho, Montana, Nevada, New Mexico, Oregon, Utah, Washington and Wyoming.

2. U.S. Bancorp, Portland, Oregon (finance company and leasing activities; Arizona, Arkansas, Colorado, Kansas, Louisiana, Mississippi, Missouri, Nebraska, Nevada, New Mexico, Oklahoma, Texas and Utah): to engage, through its subsidary U.S. Bancorp Financial, Inc. in the making, acquiring and servicing of loans and other extensions of credit, either secured or unsecured, for its own account or for the account of others, including, but not limited to, commercial, rediscount, installment sales contracts and other forms of receivables, and leasing of personal property and equipment in conformance with the provisions of Section 225.4(a) (1) and (3), 225.4(a)(6)(a) of Regulation Y. These acivities would be conducted from an office in Houston, Texas, serving the thirteen states listed above.

C. *Other Federal Reserve Banks:* None.

Board of Governors of the Federal Reserve System, October 2, 1979.

Griffith L. Garwood,

Deputy Secretary of the Board.

[FR Doc. 79-31177 Filed 10-9-79; 8:45 am]

BILLING CODE 6210-01-M

GENERAL SERVICES ADMINISTRATION

Privacy Act of 1974; Amended System of Records

AGENCY: General Services Administration.

ACTION: Notification of amended system of records.

SUMMARY: The purpose of this document is to give notice, pursuant to the provisions of the Privacy Act of 1974, 5 U.S.C. 552a, of intent to amend a system of records that is maintained by GSA. The system of records, Incident Reporting System GSA/PBS-3, will be amended to change the system name, increase the categories of individuals covered by the system, increase the categories of records in the system, and exempt general investigation and security files in the system from certain

subsections of the act. As the records being added to this system were a part of another system of records previously reported in the Federal Register, a new system report was not filed with the Speaker of the House, the President of the Senate, and the Office of Management and Budget.

DATES: Any interested party may submit written comments regarding the proposed amendment. To be considered, comments must be received on or before November 9, 1979. The changes to the system of records shall become effective as proposed without further notice on November 9, 1979, unless comments are received that would result in a contrary determination.

ADDRESS: Address comments to General Services Administration (HRAR), Washington, DC 20405.

FOR FURTHER INFORMATION CONTACT: Mr. William Hiebert, Records Management Branch, Information Management Division, (202) 566-0673.

Background

GSA organizational changes have resulted in the transfer from the Office of Investigations to the Federal Protective Service certain investigative duties, security checks on contract guards and cleaners, and preemployment investigations of Federal Protective Officer applicants. The system of records, Incident Reporting System GSA/PBS-3 (23-00-0075), is being revised to reflect these organizational changes. The name of the system, categories of records in the system, and authority for maintenance of the system are revised to include the records that cover the functions that were transferred to the Federal Protective Service. These records were previously included as part of the system of records, Investigation and Personnel Security Case Files GSA/ADM-24 (23-00-0024). In addition, the system of records GSA/PBS-3 is being amended to include the general exemptions and specific exemptions previously published in the Federal Register on April 23, 1979, 44 FR 23835.

The system of records notice GSA/PBS-3 (23-00-0075) was last published in the Federal Register on September 21, 1977, 42 FR 47765, and is amended to read as follows:

GSA/PBS-3 (23-00-0075)

System name:

Incident reporting, investigation, and security case files.

* * * * *

Categories of individuals covered by the system:

These files include records on the following categories of individuals:

a. Individuals who were the source of (1) the initial complaint or (2) an allegation that a crime had taken place;

b. Witnesses having information or evidence relating to any side of an investigation;

c. Possible and actual suspects in a criminal situation that is the subject of the investigation;

d. Subjects of investigations, both those whose identity is known and those who are unknown;

e. Employees of GSA contractors performing custodial or guard services in buildings and areas under GSA jurisdiction;

f. Individuals who are applicants for or have been appointed to the position of Federal Protective Officer; and

g. Sources of information and sources of evidence. The identity of these individuals may be confidential as well as the subject matter they contribute. These files contain information vital to the outcome of administrative procedures and civil and criminal cases. Much of this information is subject to the Jencks Act, the Freedom of Information Act, and the Privacy Act.

Categories of records in the system:

The system of records contains records consisting of:

a. Preliminary and other reports of criminal investigations from the opening of a case until it is closed. The cases may be closed administratively or by final court disposition. These records are used in the enforcement of criminal laws and rules and regulations that provide punitive sanctions. They are used in police efforts to prevent, control, or reduce crime and to apprehend criminals. They are also used by prosecutors, the courts, and in connection with corrections, probation, pardon, and parole activities. These records are instituted and maintained at varying points in the process. The processes of criminal justice and civil or administrative remedies require their partial or total disclosure.

b. Security files. These records contain information such as name, date and place of birth, address, social security number, education, occupation, experience, and investigatory material. These records are used as a basis for suitability determinations for GSA contract guards and cleaners.

Authority for maintenance of the system:

40 U.S.C. 276a through a-7, 276c, 318 (a) through (d), and 327 through 331; Executive Orders 10405, 11478, 11652, 11246, and 12065; GSA Order, Changes in organization (ADM 5440.154); and the GSA Organization Manual (OFA P 5440.1).

* * * * *

Systems exempted from certain provisions of the act:

In accordance with 5 U.S.C. 552a(j), the criminal investigation case files in this system of records are exempt from all provisions of the act with the exception of subsections (b), (c)(1) and (2); (e)(4)(A) through (F); (e)(6), (7), (9), (10), and (11); and (i) of the act. In accordance with 5 U.S.C. 552a(k), the general investigation and security files in this system of records are exempt from subsections (c)(3); (d); (e)(1); (e)(4)(G), (H), and (I); and (f) of the act.

Dated: October 1, 1979.

John T. Gilmartin,

Acting Director for Administrative Service.

[FR Doc. 79-31194 Filed 10-9-79; 8:45 am]

BILLING CODE 6820-34-M

DEPARTMENT OF HEALTH, EDUCATION, AND WELFARE

Office of the Secretary

Advisory Panel on Financing Elementary and Secondary Education; Meeting

AGENCY: Advisory Panel on Financing Elementary and Secondary Education.

ACTION: Notice of Meeting.

SUMMARY: This notice sets forth the schedule and proposed agenda of a forthcoming meeting of the Advisory Panel on Financing Elementary and Secondary Education. It also describes the functions of the Council. Notice of this meeting is required under the Federal Advisory Committee Act (5 U.S.C. Appendix 1, Section 10(a)(2)). This document is intended to notify the general public of its opportunity to attend.

DATES: October 26, 1979, 9:00 a.m. to 4:30 p.m.; October 27, 1979, 8:30 a.m. to 12:30 p.m.

ADDRESS: October 26: 400 Maryland Avenue, S.W., Washington, D.C., room 3000. October 27: Hotel Washington, Pennsylvania Avenue and 15th Street, N.W., Washington, D.C.

FOR FURTHER INFORMATION CONTACT: Dr. George B. Lane, Acting Executive Director, Advisory Panel on Financing Elementary and Secondary Education, Room 313-H, 200 Independence Avenue, S.W., Washington, D.C. 20202 (202-245-8220).

SUPPLEMENTARY INFORMATION: The Advisory Panel on Financing Elementary and Secondary Education is established under Section 1203, Title XII of the Education Amendments of 1978 (P.L. 95-561). The Panel is directed to provide the Secretary and the Congress with periodic advice and counsel concerning public policies on raising and distributing revenues to support Elementary and secondary education. The views and recommendations of the Advisory Panel shall provide periodic advice to the Secretary concerning the conduct of studies authorized by Section 1203 and make interim reports to the President and the Congress in 1980, 1981, and 1982 on the results of the studies conducted. The Advisory Panel shall also provide comments on the Secretary's annual reports and such additional recommendations for legislation or other appropriate action to the Congress no later than sixty days after submission of such reports.

The meeting of the Advisory Panel will be open to the public.

The proposed agenda includes:

(1) Swearing in of Advisory Panel members

(2) Organization of the Commission

(3) Discussion and determination of the means by which the charge of the Advisory Panel is to be implemented

(4) Determination of the date, site, and purpose of the next meeting

Records shall be kept of all Advisory Panel proceedings and shall be available for public inspection at the Office of the Assistance Secretary for Education, 200 Independence Avenue, S.W., Room 313-H, Washington, D.C. 20202.

Signed at Washington, D.C. on October 4, 1979.

George B. Lane,

Acting Executive Director, Advisory Panel on Financing, Elementary and Secondary Education.

[FR Doc. 79-31213 Filed 10-9-79; 8:45 am]

BILLING CODE 4110-89-M

National Institute for Occupational Safety and Health

Demonstration Programs for Safe Asbestos Removal or Treatment in Schools: Announcement of Request for Competitive Grant Applications

The National Institute for Occupational Safety and Health (NIOSH) in cooperation with the National Cancer Institute (NCI) and the National Institute of Environmental Health Sciences (NIEHS), announces that competitive grant applications for demonstration programs for safe asbestos removal or treatment in schools will be accepted until December 1, 1979.

Authority

These grants will be awarded and adminstered by NIOSH under the research and demonstration grant authority of section 20(a)(1) of the Occupational Safety and Health Act of 1970 (29 U.S.C. 669(a)(1)). Program regulations applicable to these grants are contained in Part 87 of Title 42, Code of Federal Regulations, "Research and Demonstration Grants Pertaining to Occupational Safety and Health."

Background and Objectives

Asbestos was used extensively in the construction of schools and many public and commercial buildings in the United States and abroad from the early 1950's until 1973, when its use was halted by the Environmental Protection Agency (EPA) for all purposes except those for which no substitute could be found. The primary use of sprayed asbestos was in fireproofing steel girders and in making fireproof acoustic and decorative walls and ceilings. Heating pipes and air conditioning ducts were also covered with asbestos. With the passage of time some of this asbestos has begun to deteriorate and to shed asbestos dust resulting in above background levels of airborne asbestos. The EPA has recommended that corrective action (asbestos removal, encapsulation or enclosure) be taken to prevent the exposure to potential health hazards. Deteriorating asbestos-containing surfaces should be either covered with a sealant, isolated through a second safe enclosure, or totally removed. The most appropriate techniques for dealing with the various asbestos problems encountered in removal or treatment should produce the least possible hazard to the construction workers and maintenance personnel involved. These techniques are not widely known and school systems may negotiate for asbestos removal with contractors who may have little or no knowledge of the protective measures required. Improper techniques may cause unnecessary worker exposure and greater contamination of the school.

The objectives of this competition are: (1) The development and testing of new and innovative procedures for the safe removal or containment of deteriorated asbestos; and (2) the effective dissemination of information on accepted procedures for safe removal, encapsulation, or enclosure of deteriorated asbestos to State Health Departments, State Education Departments and school boards, and especially contractors and maintenance personnel. Information obtained from the school experience can also be applied to similar problems with other buildings.

Eligible Applicants

Eligible applicants may be universities, colleges, and other public and private nonprofit organizations including state or local departments of health or education or school districts.

Available Funds

The program has been included in the financial plans for fiscal year 1980. At the time this announcement was prepared, Congress had not yet approved the Department's appropriation for fiscal year 1980. Applications are being requested in anticipation of funding approval, however, award of grants will be contingent upon availability of funds for this purpose. The total funds projected for all grants to be awarded under this announcement is up to $2.0 million. This amount is subject to change based on the final Congressional appropriation. An attempt will be made to obtain as widespread a geographic distribution of the grants as possible. Grantees will be required to cost share a minimum of five percent.

Program Requirements

The grant applications should address either or both of the following program objectives:

(1) Development and testing of new and innovative procedures for the safe removal, or containment of deteriorated asbestos previously used in the construction of schools, together with a plan for evaluation of their effectiveness. Such procedures must address proper work site isolation, ventilation, respiratory protection, protective clothing and other related issues. Occupational Safety and Health Administration (OSHA) regulations governing workplace exposure to asbestos must be followed. The plan must also assess the effectiveness of operations and establish safe disposal mechanisms for the asbestos which has been removed. The plan should consider the various types of asbestos usage in school building construction.

(2) Development of demonstration programs for the dissemination of information about accepted procedures for safe removal, encapsulation, or enclosure of asbestos previously used in the construction of schools. Such procedures must include proper work site isolation, ventilation, respiratory protection, protective clothing, and safe disposal of the asbestos that has been removed. OSHA regulations governing

workplace exposure to asbestos must be followed. Target audiences would include state and local school and health officials, contractors and their employees, and school maintenance personnel.

Information to be disseminated about accepted procedures would be essentially as presented in EPA Guidelines and NIOSH manuals listed in the bibliography.

Methods for dissemination may include motion pictures, other audio-visual aids, written materials, demonstration models or other methods which may seem appropriate. Any actual asbestos removal or treatment supported under these designs should include a plan for evaluating the effectiveness of this information transfer.

In addition, the grant application should contain a detailed cost breakdown and a timetable for accomplishing the proposed objectives and producing final results.

Criteria for Review

Applications will be reviewed and evaluated by an appropriate peer review group (Study Section) according to the following criteria:

1. Relevance of the proposal to the scope and objectives provided in the announcement.
2. The technical merit of the proposed approaches to the problem.
3. The expertise and qualifications of the proposed staff.
4. Sufficient commitment of time by proposed staff.
5. Evaluation plan and timetable.
6. Cost.
7. Consideration of the diverse types of asbestos usage in construction.
8. Geographical distribution of applicants.

Application and Award

Applications should be submitted on Form PHS-398 or (PHS-5161-1 for State and local governments). The conventional presentation for grant applications should be utilized and the points identified under Criteria for Review must be fulfilled. The words "NIOSH/Cancer Control" should be typed in block letters in the upper right hand corner of the face page of the application.

A brief letter should accompany the application indicating that it is in response to the grant announcement: "Demonstration Programs for Safe Asbestos Removal or Treatment in Schools." An original and six copies (original and two for State and local governments) of the application should be sent or delivered to:

Division of Research Grants, National Institutes of Health, Room 240, Westwood Building, 5333 Westbard Avenue, Bethesda, Maryland 20205.

To indicate that the application has been submitted, a copy of the covering letter should be sent to:

Grants Administration and Review Branch, OECSP, National Institute for Occupational Safety and Health, 5600 Fishers Lane, Room 8-63, Rockville, Maryland 20857.

In addition, each prospective applicant should submit a letter of intent containing a brief description of the proposed project. Letters of intent should be submitted to NIOSH at the above address and will be accepted until November 1, 1979.

Application packets and instructions are available from any of the addressees listed in this announcement.

Deadline for submission of applications is December 1, 1979. Applications received after the deadline will not be accepted for review and will be returned to the applicant. Review of applications will be by an appropriate Study Section in March 1980. It is anticipated that awards will be made by April 15, 1980, and that project demonstrations will take place in the summer of 1980.

State and Areawide Clearinghouse Requirements (OMB Circular A-95) regarding notification of intent to submit a proposal should be adhered to. Applicants must forward a copy of the application to the respective clearinghouse(s).

FOR FURTHER INFORMATION CONTACT:

Mr. Joseph West, Grants Management Officer, NIOSH, Rockville, Md. 20857. Phone: (301) 443-3133.

Mr. Roger A. Nelson, Grants Administration and Review Branch, NIOSH, Rockville, Md. 20857. Phone: (301) 443-4496.

Bibliography

1. Asbestos-Containing Materials in School Buildings, Environmental Protection Agency, March 1979.
2. NIOSH Certified Equipment List as of July 1978, National Institute for Occupational Safety and Health, NIOSH Publication No. 79-107, November 1978.
3. Occupational Safety and Health Administration, Occupational Safety and Health Standards, Part 1910 of Title 29, Code of Federal Regulations.
4. Pritchard, J. A., A Guide to Industrial Respiratory Protection, NIOSH Publication No. 76-189 (GPO Stock No. 017-033-00153-7), June 1976.
5. Respiratory Protection . . . A Guide for the Employee. National Institute for Occupational Safety and Health, NIOSH Publication No. 78-193B GPO Stock No. 017-033-00327-1) ($1.50), October 1978.
6. Respiratory Protection . . . An Employer's Manual. National Institute for Occupational Safety and Health, NIOSH Publication No. 78-193A (GPO Stock No. 017-033-00326-2) ($2.30), October 1978.

(Catalog of Federal Domestic Assistance Program No. 13.262 Occupational Safety and Health Research Grants.)

Dated: October 4, 1979.

Anthony Robbins,

Director, National Institute for Occupational Safety and Health.

[FR Doc. 79-31306 Filed 10-9-79; 8:45 am]

BILLING CODE 4110-87-M

DEPARTMENT OF THE INTERIOR

Bureau of Land Management

[W-69284]

Wyoming; Invitation for Coal Exploration License; Antelope Coal Company

September 28, 1979.

Antelope Coal Company, a wholly owned subsidiary of NERCO, Inc, hereby invites all interested parties to participate on a pro rata cost sharing basis in its coal exploration program concerning Federally owned coal underlying land contained in the following description, Converse County, Wyoming:

Sixth Principal Meridian, Wyoming

T. 40 N., R. 71 W.,
Sec. 2, lot 3, SE¼NE¼, and SE¼NE¼.

T. 41 N., R. 71 W.,
Sec. 25, NE¼SW¼, and E½SE¼;
Sec. 26, W½SW¼, and NE¼SE¼;
Sec. 27, SW¼SW¼, and NW¼SE¼;
Sec. 33, SE¼NE¼, and NW¼NW¼;
Sec. 34, NE¼NE¼, N½SE¼, and SE¼SE¼;
Sec. 35, S½SW¼.

Containing 756.07 acres, more or less.

All of the coal in the above lands consists of unleased Federal coal within the U.S. Department of Agriculture's Thunder Basin withdrawal. The purpose of the exploration program is to determine the quality and quantity of the coal within the boundaries of the above described area and to perform off-lease drilling of alluvium monitoring wells for the hydrology study along Antelope Creek.

A detailed description of the proposed drilling program is available for review during normal business hours in the following offices (under serial number W-69284):

Bureau of Land Management, 2515 Warren Avenue, Cheyenne, Wyoming 82001
Bureau of Land Management, 951 Union Boulevard, Casper, Wyoming 82601
U.S. Forest Service, Thunder Basin National Grassland, 809 South 9th Street, Douglas, Wyoming 82633

This notice of invitation will be published in this newspaper once each

week for two consecutive weeks beginning the week of September 30, 1979 and in the Federal Register. Any party electing to participate in this exploration program must send written notice to both the Bureau of Land Management and Antelope Coal Company, no later than 30 days after publication of this invitation in the Federal Register. The written notice for Antelope Coal Company should be sent to the following address: Antelope Coal Company, Northern Energy Resources Company, 529 SW Third Avenue, Portland, Oregon 97204.

The written notice for the Bureau of Land Management should be sent to the following address: Wyoming State Office, Attention: Lands and Mining Section, P.O. Box 1828, Cheyenne, Wyoming 82001.

The foregoing notice is published in the Federal Register pursuant to Title 43 Code of Federal Regulations, section 3410.2-1 (d)(1) (44 F.R. 42614, July 19, 1979).

Harold G. Stinchcomb,

Chief, Branch of Lands and Minerals Operations.

[FR Doc. 79-31238 Filed 10-9-79; 8:45 am]

BILLING CODE 4310-84-M

Eastern Gulf of Alaska Outer Continental Shelf; Locations and Dates of Public Hearings Regarding Proposed OCS Oil and Gas Lease Sale No. 55

In accordance with 43 CFR 3314.1, public hearings will be held in Yakutat and Juneau, Alaska for the purpose of receiving comments and suggestions relating to the draft environmental statement concerning a proposed oil and gas lease sale offshore the eastern Gulf of Alaska. The hearings are scheduled to be held in Yakutat on October 24, 1979, from 1 p.m. to 9 p.m. at the High School, and in Juneau on October 26, 1979, from 5 p.m. to 9 p.m. at the Baranof Hotel.

The hearings will provide the Secretary of the Interior with additional information from the governmental agencies and public and private sectors to help evaluate the potential effects of the proposed offering of 350 tracts in the eastern Gulf of Alaska. Comments are solicited concerning effects of exploration, development and production resulting from the proposed sale of the 350 tracts on the area marine, cultural, recreational, and other resources of the eastern Gulf of Alaska.

The draft environmental statement concerning proposed OCS Sale No. 55 was made available to the public on September 7, 1979. Copies of this statement can be obtained from the Bureau's Alaska Outer Continental Shelf Office, 620 E. 10th Avenue, P.O. Box 1159, Anchorage, Alaska 99510, and from the Office of Public Affairs, Bureau of Land Management (130), Washington, D.C.

Copies of the draft environmental statement are also available for review in the following public libraries: Alaska Federation of Natives, 670 W. Fireweed Lane, Anchorage, Alaska 99501; Department of Interior, Alaska Resources Library, 733 W. 4th Avenue, Anchorage, Alaska 99501; Kenai Community Library, Box 157, Kenai, Alaska 99611; North Star Borough Library, Fairbanks, Alaska 99701; University of Alaska, Institute of Economics and Government Research Library, Fairbanks, Alaska 99801; Z. J. Loussac Public Library, 427 F Street, Anchorage, Alaska 99801; Alaska State Library, Juneau, Alaska 99811; Bureau of Indian Affairs School Library, Elim, Alaska 99739; Department of Defense, Army Corps of Engineers Library, Anchorage, Alaska 99510; Department of Interior Bureau of Mines Library, AF—F.O. Center, P.O. Box 550, Juneau, Alaska 99802; Ketchikan Community College, 7th & Madison, Ketchikan, Alaska 99901; Seldovia Public Library, Seldovia, Alaska 99663; University of Alaska—Juneau Library, P.O. Box 1447, Juneau, Alaska 99802; Anchor Point Public Library, Anchor Point, Alaska 99556; Cordova Public Library, Cordova, Alaska 99574; Elim Learning Center, Elim, Alaska 99739; Haines Public Library, Haines, Alaska 99827; Homer Public Library, Homer, Alaska 99603; Juneau Memorial Library, Douglas Public Library, 114 W. 4th Street, Juneau, Alaska 99824; Ketchikan Public Library, 629 Dock Street, Ketchikan, Alaska 99901; Kodiak Public Library Association, Inc., Kodiak, Alaska 99615; Metlakatla Extension Center, Metlakatla, Alaska 99926; Petersburg Extension Center, Petersburg, Alaska 99833; Seward Community Library, Seward, Alaska 99664; Sitka Community Library, Sitka, Alaska 99835; University of Alaska—Anchorage Library, 3211 Providence Drive, Anchorage, Alaska 99504; University of Alaska, Elmer E. Rasmusson Library, Fairbanks, Alaska 99701; Wrangell Extension Center, Wrangell, Alaska 99929.

Interested individuals, representatives of organizations, and public officials wishing to testify at the hearings are requested to contact the Manager, Alaska Outer Continental Shelf Office, Bureau of Land Management at the above address by 4:15 p.m., October 19, 1979. Written comments from those unable to attend the hearings should also be addressed to the Manager, Alaska Outer Continental Shelf Office, at the above address. The Bureau will accept written comments on the draft environmental statement until November 9, 1979. This will allow time for those unable to testify at the hearing to make their views known and for those presenting oral testimony to submit the supplemental materials. Time limitations make it necessary to limit the length of oral presentation to ten (10) minutes. An oral statement may be supplemented, however, by a more complete written statement which should be submitted to a hearing official at the time of oral presentation. Written statements will be considered for inclusion in the hearing record. To the extent that time is available after presentation of oral statements by those who have given advance notice, the hearing officer will give others present an opportunity to be heard.

After all testimony and comments have been received and considered, a final environmental statement will be prepared.

Ed Hastey,

Associate Director, Bureau of Land Management.

Approved: October 4, 1979.

Guy R. Martin,

Assistant Secretary of the Interior.

[FR Doc. 79-31297 Filed 10-9-79; 8:45 am]

BILLING CODE 4310-84-M

National Park Service

Ozark National Scenic Riverways Advisory Commission; Meeting

Notice is herey given in accordance with the Federal Advisory Committee Act, Pub. L. 92-463, 86 Stat. 770, as amended by Pub. L. 94-409, 90 Stat. 1247, that a meeting of the Ozark National Scenic Riverways Commission will be held Friday, October 26, 1979, at 10:00 a.m. (CDT) at the Riverways' Headquarters on U.S. Highway 60 in Van Buren, Missouri.

The Commission was established by Pub. L. 88-492, 78 Stat. 609, 16 U.S.C. 460m-6, to meet and consult with the Secretary of the Interior on matters related to the administration and development of the Ozark National Scenic Riverways.

The members of the commission are as follows:

Mr. Oscar Hawksley, Warrensburg, Missouri (chairman),
Mr David Rust, Cabool, Missouri,
Mr. H. C. Daniel, Van Buren, Missouri,
Mr. Carlton E. Bay, Salem, Misssouri,
Mr. William Hall, Kansas City, Missouri,

Mr. Henry F. Luepke, Jr., St. Louis Missouri, Mr. Edward Hodge, Eminence, Missouri.

Matters to be discussed at this meeting include reviewing with the Commission the results of the recent public workshops pertaining to the development of the General Management Plan for the Riverways and providing the Commission an update on Riverways' operations.

The meeting will be open to the public. Any member of the public may file with the Commission prior to the meeting a written statement concerning the matters to be discussed. Persons wishing further information concerning the meeting or who wish to submit written statements may contact Arthur L. Sullivan, Superintendent, Ozark National Scenic Riverways, P.O. Box 490, Van Buren, Missouri 63695, telephone 314-323-4236. Minutes of the meeting will be available for public inspection four weeks after the meeting at the office of Ozark National Scenic Riverways located in Van Buren, Missouri.

Dated: September 28, 1979.

J. L. Dunning,

Regional Director, Midwest Region.

[FR Doc. 79-31150 Filed 10-9-79; 8:45 am]

BILLING CODE 4310-70-M

Rocky Mountain National Park; Intention To Extend Concession Contract

Pursuant to the provisions of Section 5 of the Act of October 9, 1965 (79 Stat. 969; 16 U.S.C. 20), public notice is hereby given that on or before November 9, 1979 the Department of the Interior, through the Rocky Mountain Regional Director, proposes to extend the concession contract with Mr. Rex Walker, authorizing him to continue to provide saddle livery facilities and services for the public at Rocky Mountain National Park, for a period of one (1) year from January 1, 1980 through December 31, 1980.

An assessment of the environmental impact of this proposed action has been made and it has been determined that it will not significantly affect the quality of the environment, and that it is not a major Federal action having a significant impact on the environment under the National Environmental Policy Act of 1969. The environmental assessment may be reviewed in the Office of the Superintendent, Rocky Mountain National Park, Estes Park, Colorado, 80517.

The foregoing concessioner has performed his obligations to the satisfaction of the Secretary under an existing contract which expires by limitation of time on December 31, 1979, and therefore, pursuant to the Act of October 9, 1965, as cited above, is entitled to be given preference in the renewal of the contract and in the negotiation of a new contract.

This provision, in effect, grants Mr. Rex Walker, as the present satisfactory concessioner, the right to meet the terms of responsive proposals for the proposed renewed or extended contract and a preference in the award of the contract, if, thereafter, the proposal of Mr. Rex Walker is substantially equal to others received. In the event a responsive proposal superor to that of Mr. Rex Walker is submitted, Mr. Rex Walker will be given the opportunity to meet the terms and conditions of the superior proposal which the Secretary considers desirable, and, if it does so, the new contract will be negotiated with Mr. Rex Walker. The Secretary will consider and evaluate all proposals received as a result of this notice. Any proposal including that of the existing concessioner must be postmarked or hand delivered on or before the thirtieth (30th) day following publication of this notice to be considered and evaluated.

Interested parties should contact the Superintendent, Rocky Mountain National Park, Estes Park, Colorado, 80517, for information as to the requirements of the proposed contract.

Dated: September 5, 1979.

James B. Thompson,

Acting Regional Director, Rocky Mountain Region.

[FR Doc.79-31151 Filed 10-9-79; 8:45 am]

BILLING CODE 4310-70-M

Office of Surface Mining Reclamation and Enforcement

Advisory Committee on Mining and Mineral Resources; Cancellation of Meeting

The meeting of the Advisory Committee on Mining and Mineral Resources which was scheduled to be held on October 10, 1979, from 9:00 a.m.-5:00 p.m. in Conference Room 5160 in the Department of the Interior, has been cancelled. The meeting had been announced in the Federal Register, Vol. 44, No. 185, Page 54785, dated September 21, 1979, and in Vol. 44, No. 191, page 56407 dated October 1, 1979.

Walter N. Heine,

Director.

[FR Doc. 79-31466 Filed 10-9-79; 8:59 am]

BILLING CODE 4310-05-M

LEGAL SERVICES CORPORATION

Interim Internal Staff Directive; Publicity of and Comments on Expansion Into Areas Previously Unserved by LCS-Funded Programs

October 1, 1979.

AGENCY: Legal Services Corporation.

ACTION: Internal staff directives.

SUMMARY: In 1979 the Board of Directors of the Legal Services Corporation approved, on an interim basis, internal staff directives to guide Corporation personnel in deciding how to allocate funds for expansion into new areas. The internal policies to be used to guide the completion of the expansion process for 1980 remain essentially the same as those used last year. The Corporation is publishing these internal staff directives for the information of the public although publication is not required.

ADDRESS: Legal Services Corporation, 733 15th Street, NW., Suite 700, Washington, DC 20005.

Internal Staff Directive Concerning Publicity of and Comments on Expansion Into Areas Previously Unserved by LSC-Funded Programs

The Legal Services Corporation is responsible for supporting high quality legal assistance to the poor in civil matters. When the Corporation has funds to support assistance in an area previously unserved by an LSC-funded program, the Regional staff of the Corporation shall attempt to develop and recommend funding arrangements for such assistance that will give the best assurance of the highest quality and the greatest efficiency. It should be recognized, however, that the Corporation is continuing to examine, through the Delivery Systems Study and in other ways, the most effective means of delivering high-quality services in various situations.

This directive is designed to aid the Corporation in obtaining the information needed to reach sound decisions concerning the allocation of expansion funds. The procedures should be followed as a general rule, though it may be appropriate to modify them to meet the circumstances of particular situations.

(1) As soon as practicable, the Regional staff should announce the availability of funds to provide legal services for the poor in areas unserved by a Corporation recipient. The announcement should state that the Corporation will consider the views of and proposals from all interested groups, and should be sent to:

a. the State Bar Association;

b. the State Advisory Council established under the Legal Services Corporation Act of 1974, as amended;

c. all local Bar Associations in the unserved area;

d. all existing legal services programs in the unserved area—whether they receive funds or are operated as pro bono programs;

e. the National Clients Council; and

f. all law schools approved by the American Bar Association in the unserved areas.

In addition, the announcement should be sent to other appropriate groups within the unserved area that might be interested and that can be readily identified by Regional staff. The announcement should also be published in a newspaper or newspapers of general circulation within the unserved areas. Regional staff should allow at least thirty days after sending and publishing announcements for the submission of proposals for the provision of legal service in an area.

(2) The Office of Field Services will designate those unserved areas in each state for which funds will be made available to provide service in the current fiscal year. The Regional Office staff should hold a public meeting or meetings in those areas. Meetings generally should be held in locations that are reasonably accessible to the maximum number of interested parties, and, to the extent feasible, interested persons should not have to travel more than approximately 100 miles to attend. Regional staff should attempt to notify interested parties of the date and place of meetings and should publish announcements of meetings in a newspaper or newspapers of general circulation within the area to be served. If the circumstances of a particular situation make it impractical to hold a public meeting in the area to be served, particular care should be taken to ensure that all who may have an interest in the matter have an opportunity to express their views in other ways to Regional staff.

(3) At least thirty days prior to the approval of any grant application or prior to entering into a contract or prior to the initiation of any other project for the provision of legal services in an area not previously served by a recipient of LSC funds, the Corporation shall announce publicly such grant, contract, or project, and shall notify the Governor, the State Bar association, and the principal local bar association (if there be any) and any existing legal services programs in the service area where legal assistance will thereby be initiated. Notification shall include a reasonable description of the grant application or proposed contract or project and request comments and recommendations.

(4) When arrangements for expansion into a new area are completed and approved by the Corporation, the Board of Directors of the program selected to serve that area must be constituted in accordance with Section 1007(c) of the Legal Services Corporation Act of 1974, as amended, and membership on the Board and any program advisory councils must be structured to reflect the communities to be served.

Internal Staff Directive Concerning Expansion of Service to Areas Previously Unserved by LSC-Funded Programs

In its 1980 budget request, the Corporation sought funds to complete its short-term plan to provide resources for civil legal services to eligible poor persons without minimum access at a level equivalent to two attorneys per 10,000 poor persons. We have now made available through the Corporation's Regional Offices a significant amount of increased funding for expanding access through existing programs and for establishing new programs in areas unserved by Corporation recipients. This directive deals with the allocation of funds for expansion in those areas.

These expansion funds will be divided among the region and states in proportion to the number of eligible poor who currently live outside the service boundaries of programs funded by the Legal Services Corporation

Since these funds will be spent to complete the short-term goal of resources sufficient to support the equivalent of two lawyers per 10,000 poor persons, the Corporation has concluded that grants should be made to administrative units that will most efficiently provide the highest quality of service. Regional Offices should consider applications to provide service through all types of delivery methods and should seek the best possible means to provide a full range of civil legal assistance for the poor in these areas that do not have minimum access to legal services. Economies of scale in the administration of legal services programs, including cooperative arrangements among programs, should be considered along with other factors affecting efficiency and quality.

Within any given state, priority should be given to funding through administrative units that will provide the highest quality of service to the largest number of eligible clients (including those in rural areas) in the most efficient manner, consistent with local participation and accountability.

Funds available to a program for sources other than the Corporation will be considered by the Corporation in defining the area to be served. It is not the Corporation's present intention to limit total funds (LSC and non-LSC funds) to the minimum access level of the equivalent of two attorneys per 10,000 poor, in view of the instability of most non-LSC funding sources. If the total of non-LSC funds plus the proposed LSC grant would allow the program to operate at a level in excess of the equivalent of four attorneys per 10,000 poor, however, the amount of LSC funding may be adjusted accordingly.

Dan J. Bradley,

President, Legal Services Corporation.

[FR Doc. 79-30933 Filed 10-9-79; 8:45 am]

BILLING CODE 6820-35-M

NATIONAL ALCOHOL FUELS COMMISSION

Open Meeting

October 3, 1979.

Name: National Alcohol Fuels Commission.

Date: Oct. 22 and Oct. 23, 1979.

Time: 1:00 p.m.–5:00 p.m. Oct. 22; 9:00 a.m.–5:00 p.m. Oct. 23.

Place: The Meadowlands Hilton, East Rutherford, New Jersey.

Type of meeting: Open.

Contact person: Dr. Edward J. Bentz, Jr. Executive Director, (202) 254-7453.

Submission of written statements: No later than Oct. 17, 1979 to Dr. Edward J. Bentz, Jr. Executive Director, National Alcohol Fuels Commission, 2000 M St., N.W., Suite 3000 Washington, D.C. 20036 (Interim Address).

Purpose of commission: The National Alcohol Fuels Commission was established under Section 170 of the Surface Transportation Assistance Act of 1978 (PL 95-599) to make a full and complete investigation and study for the long- and short-term potential for alcohol fuels from biomass (including municipal and industrial waste, sewage sludge and oceanic and terrestrial crops) and coal to contribute to meeting the nation's energy needs. Based on such study it shall recommend those policies and their attendant costs and benefits most likely to minimize our dependence on petroleum.

Purpose of hearing: Soliciting information on current and emerging developments relating to alcohol fuels in New Jersey, New York, and surrounding areas.

Tentative Agenda: 1:00 p.m. Oct. 22—Open Business Meeting; 1:30 p.m.

Oct. 22—Open Hearing; and 9:00 a.m. Oct. 23—Open Hearing.

Date: October 2, 1979.

Edward J. Bentz, Jr.,

Executive Director.

[FR Doc. 79-31205 Filed 10-9-79; 8:45 am]

BILLING CODE 6820-AN-M

NATIONAL COMMISSION ON AIR QUALITY

Alternative Air Pollution Control Policies

The National Commission on Air Quality (NCAQ), as part of its mandate under Section 323 of the Clean Air Act (CAA), is reviewing alternative approaches for achieving national air quality goals. The Commission is undertaking five regional studies in diverse parts of the country, in part to test air pollution control options fundamentally different from those applied currently under the CAA. (See Parts II and III of the NCAQ Plan of Study, Federal Register, July 6, 1979.) The Commission's regional studies will investigate the implementation of the CAA in each study area, including technical and institutional issues and the costs and benefits of existing air pollution control programs. In particular, the regional studies will assess the impacts of the existing Nonattainment Area and Prevention of Significant Deterioration (PSD) requirements. The Commission also will assess in these studies impacts of different combinations of control measures and of various regional growth projections.

In addition, the Commission will analyze, in each area studied, the probable effects of several alternative policies in order to be able to compare these policies with existing provisions of the CAA. The Commission by this notice is inviting suggestions of specific alternative means for preventing significant deterioration of air quality which differ from the PSD regulatory approach provided in Sections 160–169 in Part C of the Act and 40 CFR 52.21. In particular, the Commission seeks alternatives to the specific requirements of the existing program, its concept of air classes, and the permitting system it entails. Alternative policies could include mechanisms by which the Federal goverment, states, and localities decide how much air pollution will be allowed and in what locations, in areas meeting Federal ambient air quality standards for a particular pollutant. Similarly, the Commission is seeking alternatives to the existing nonattainment/offset requirements contained in Sections 171–78 in Part D of the Act.

One alternative, which is fundamentally different from the PSD or nonattainment provisions of the existing CAA, is an approach that would provide for changing from the current ambient air quality standards approach to a technology-based emission limitations system such as is the basis for the Clean Water Act. Other types of policy alternatives could include economic incentives such as emission fees, marketable pollution permits, transferable emissions reduction assessments, emission banking, subsidies, income tax credits or other beneficial tax treatment of pollution control investments.

Interested persons should submit ideas for policy alternatives to the Commission by November 1, 1979, so that they may be considered for application in the five regional studies. The Commission will review ideas submitted along with those developed in the course of staff research and select several alternatives for consideration in its regional studies. Commentors are requested to identify policy alternatives, briefly describe advantages and disadvantages, and list known descriptive reports and studies on the approaches.

Further information is available from: Matthew A. Low, Chief, Policy Analysis Division, National Commission on Air Quality, 499 South Capitol Street, Second Floor, Washington, D.C. 20003, Phone: (202) 245-6415.

National Commission on Air Quality.

William H. Lewis, Jr.,

Director.

[FR Doc. 79-31152 Filed 10-9-79; 8:45 am]

BILLING CODE 6820-98-M

NATIONAL SCIENCE FOUNDATION

Committee Management; Establishment

Pursuant to the Federal Advisory Committee Act (P.L. 92–463), it is hereby determined that the establishment of the Advisory Committee for Engineering and Applied Science is necessary, appropriate, and in the public interest in connection with the performance of duties imposed upon the Director, National Science Foundation (NSF) and other applicable law. This determination follows consultation with the Committee Management Secretariat Staff, General Services Administration, pursuant to Section 9(a) of the Federal Advisory Committee Act and other applicable issuances.

Name of committee: Advisory Committee for Engineering and Applied Science.

Purpose: To provide advice, recommendations, and counsel on major goals and policies pertaining to Engineering and Applied Science activities and programs. It also provides oversight concerning support for research and research related activities in the Divisions of Electrical, Computer and Systems Engineering, Chemical and Process Engineering, Civil and Mechanical Engineering, Applied Research, Problem Focused Research and Intergovernmental Science and Public Technology, including, in some cases, peer panel reviews of research proposals.

Effective date of establishment and duration: This establishment is effective upon filing the charter with the Director, NSF, and with the standing committees of Congress having legislative jurisdiction of the Foundation. The Committee will continue for two calendar years from the effective date.

Membership: The membership of this committee shall be fairly balanced in the terms of the points of view represented and the Committee's function. Members will consist of individuals eminent in their respective fields of endeavor. Due consideration will be given to achieving membership that reasonably represents: (a) the academic sector, industry and the communities of potential users supported by the Directorate for Engineering and Applied Science programs; (b) women and minority scientists; and (c) all geographical regions of the country.

Operation: The Committee will operate in accordance with provisions of the Federal Advisory Committee Act (P.L. 92–463), Foundation policy and procedures, OMB Circular No. A-63, Revised, and other directives and instructions issued in implementation of the Act.

George C. Pimentel,

Acting Director.

October 4, 1979.

[FR Doc. 79-31174 Filed 10-9-79; 8:45 am]

BILLING CODE 7555-01-M

Advisory Committee for Behavioral and Neural Sciences, Subcommittee on Linguistics; Meeting

In accordance with the Federal Advisory Committee Act, as amended, Pub. L. 92–463, the National Science Foundation announces the following meeting:

Name: Subcommittee on Linguistics of the Advisory Committee for Behavioral and Neural Sciences.

Date and Time: October 25 and 26, 1979; 9:00 a.m. to 5:00 p.m. each day.

Place: Room 321, National Science Foundation, 1800 G Street, NW., Washington, D.C. 20550.

Type of Meeting: Closed.

Contact Person: Dr. Paul G. Chapin, Program Director, Linguistics Program, Room 320, National Science Foundation, Washington, D.C. 20550, telephone (202) 254-6326.

Purpose of Subcommittee: To provide advice and recommendations concerning support for research in Linguistics.
Agenda: To review and evaluate research proposals as part of the selection process for awards.
Reason for Closing: The Proposals being reviewed include information of a proprietary or confidential nature, including technical information concerning individuals associated with the proposals. These matters are within exemptions (4) and (6) of 5 U.S.C. 552b(c), Government in the Sunshine Act.
Authority to Close Meeting: This determination was made by the Committee Management Officer pursuant to provisions of Section 10(d) of Pub. L. 92-463. The Committee Management Officer was delegated the authority to make such determinations by the Director, NSF, on July 6, 1979.

Joyce F. Laplante,
Committee Management Coordinator.
October 2, 1979.

[FR Doc. 79-31247 Filed 10-9-79; 8:45 am]
BILLING CODE 7555-01-M

Advisory Committee for Behavioral and Neural Sciences, Subcommittee on Memory and Cognitive Processes; Meeting

In accordance with the Federal Advisory Committee Act, Pub. L. 92-463, as amended, Pub. L. 92-463, the National Science Foundation announces the following meeting:

Name: Subcommittee on Memory and Cognitive Processes of the Advisory Committee for Behavioral and Neural Sciences.
Date and Time: October 22-24, 1979; 9:00 a.m. to 5:00 p.m. each day.
Place: Room 421, National Science Foundation, 1800 G Street, N.W., Washington, D.C. 20550.
Type of Meeting: Part Open—Closed 10/22-23—9:00 a.m. to 5:00 p.m. Open 10/24—9:00 a.m. to 5:00 p.m.
Contact Person: Dr. Joseph L. Young, Program Director, Memory and Cognitive Processes Program, Room 320, National Science Foundation, Washington, D.C. 20550, telephone (202) 634-1583.
Summary Minutes: May be obtained from the Contact Person, Dr. Joseph L. Young, at the above stated address.
Purpose of Committee: To provide advice and recommendations concerning support for research in Memory and Cognitive Processes.
Agenda: Closed—October 22-23, 9:00 a.m. to 5:00 p.m., to review and evaluate research proposals as part of the section process for awards. Open—October 24, 9:00 a.m. to 5:00 p.m., general discussion of the current status and future plans of the Memory and Cognitive Processes Program.
Reason for Closing: The proposals being reviewed include information of a proprietary or confidential nature including technical information; financial data, such as salaries; and personal information concerning individuals associated with the proposals. These matters are within the exemption (4) and (6) of 5 U.S.C. 552b(c), Government in the Sunshine Act.
Authority to Close Meeting: This determination was made by the Committee Management Officer pursuant to provisions of Section 10(d) of Pub. L. 92-463. The Committee Management Officer was delegated the authority to make such determination by the Director, NSF, on July 6, 1979.

Joyce F. Laplante,
Acting Committee Management Coordinator.
October 2, 1979.

[FR Doc. 79-31242 Filed 10-9-79; 8:45 am]
BILLING CODE 7555-01-M

Advisory Committee for Behavioral and Neural Sciences, Subcommittee on Neurobiology; Meeting

In accordance with the Federal Advisory Committee Act, as amended, Pub. L. 92-463, the National Science Foundation announces the following meeting:

Name: Subcommittee on Neurobiology of the Advisory Committee for Behavioral and Neural Sciences.
Date and Time: October 22, 23, and 24, 1979; 9:00 a.m. to 5:00 p.m. each day.
Place: Room 628, National Science Foundation, 1800 G Street, N.W., Washington, D.C.
Type of Meeting: Closed.
Contact Person: Dr. A. O. Dennis Willows, Program Director, Neurobiology Program, Room 320, National Science Foundation, Washingtin, D.C. 20550 telephone 202-634-4036.
Purpose of Subcommittee: To provide advice and recommendations concerning support for research in Neurobiology.
Agenda: To review and evaluate research proposals as part of the selection process for awards.
Reason for Closing: The proposals being reviewed include information of a proprietary or confidential nature, including technical information; financial data, such as salaries; and personal information concerning individuals associated with the proposals. These matters are within exemptions (4) and (6) of 5 U.S.C. 552b(c), Government in the Sunshine Act.
Authority to Close Meeting: This determination was made by the Committee Management Officer pursuant to provisions of Section 10(d) of Pub. L. 92-463. The Committee Management Officer was delegated the authority to make such determinations by the Director, NSF, on July 6, 1979.

Joyce F. Laplante,
Acting Committee Management Coordinator.
October 2, 1979.

[FR Doc. 79-31250 Filed 10-9-79; 8:45 am]
BILLING CODE 7555-01-M

Advisory Committee for Behavioral and Neural Sciences, Subcommittee for Psychobiology; Meeting

In accordance with the Federal Advisory Committee Act, Pub. L. 92-463, as amended, the National Science Foundation announces the following meeting:

Name: Subcommittee on Psychobiology of the Advisory Committee for Behavioral and Neural Sciences.
Date and Time: October 22 and 23, 1979, 8:30 a.m.-5:00 p.m. each day.
Place: National Science Foundation, 1800 G Street, N.W., Room 321, Washington, D.C. 20550.
Type of Meeting: Closed.
Contact Person: Dr. Fred Stollnitz, Program Director, Psychobiology Program, Room 320, National Science Foundation, Washington, D.C. (202) 632-4264.
Purpose of Subcommittee: To provide advice and recommendations concerning support for research in psychobiology.
Agenda: To review and evaluate research proposals as part of the selection process for awards.
Reason for Closing: The proposals being reviewed include information of a proprietary or confidential nature, including technical information, financial data, such as salaries, and personal information concerning individuals associated with the proposals. These matters are within exemptions (4) and (6) of 5 U.S.C. 552b(c), Government in the Sunshine Act.
Authority to Close Meeting: This determination was made by the Committee Management Officer pursuant to provisions of Section 10(d) of Pub. L. 92-463. The Committee Management Officer was delegated the authority to make such determinations by the Director, NSF, On July 6, 1979.

Joyce F. Laplante,
Acting Committee Management Coordinator.
October 2, 1979.

[FR Doc. 79-31249 Filed 10-9-79; 8.45 am]
BILLING CODE 7555-01-M

Advisory Committee for Mathematical and Computer Sciences, Subcommittee for Computer Science; Meeting

In accordance with the Federal Advisory Committee Act, Pub. L. 92-463, as amended, the National Science Foundation announces the following meeting:

Name: Subcommittee for Computer Science of the Advisory Committee for Mathematical and Computer Sciences.
Date and Time: October 24, 25 and 26, 1979; 9:00 a.m. each day.
Place: Room 642, National Science Foundation, 1800 G Street, N.W., Washington, D.C. 20550.
Type of Meeting: Part Open—10/24—Closed—9:00 a.m. to 5:00 p.m.; 10/25—

Open—9:00 a.m. to 12:30 p.m.; 10/25—Closed—1:30 a.m. to 3:00 p.m.; 10/25—Open—3:30 a.m. to 5:00 p.m.; 10/26—Open—9:00 a.m. to 5:00 p.m.

Contact Person: Mr. Kent K. Curtis, Head, Computer Science Section, Room 339, National Science Foundation, Washington, D.C. 20550. Telephone: (202) 632-7346. Anyone planning to attend this meeting should notify Mr. Curtis no later than 10/15/79.

Summary Minutes: May be obtained from the Contact Person at the above stated address.

Purpose of subcommittee: To provide advice and recommendations concerning support for research in Computer Science.

Agenda:

Wednesday, October 24, 1979—9:00 a.m. to 5:00 p.m.—Closed:

Review and comparison of declined proposals (and supporting documentation) with successful awards under the Computer Systems Design Program including review of peer review materials and other privileged material. Preparation of a report based upon the above review.

Thursday, October 25, 1979—9:00 a.m. to 12:00 noon—Open:

9:00 a.m.—Introduction by Mr. Kent K. Curtis, Head CSS/MCS.

9:30 a.m.—Briefing by Dr. John R. Pasta, DD/MCS.

10:30 a.m.—Briefing by Assistant Director, Mathematical and Physical Sciences.

11:30 a.m.—Briefing by Kent K. Curtis, Head CSS/MCS.

12:30 p.m.—Lunch.

Thursday, October 25, 1979—1:30 p.m. to 3:30 p.m.—Closed:

Continuation of review and comparison of declined proposals (and supporting documentation) with successful awards under the Computer Systems Design Program including review of peer review materials and other privileged material. Preparation of a report based upon the above review.

Thursday, October 25, 1979—3:30 p.m. to 5:00 p.m.—Open:

3:30 p.m.—Briefing by Dr. Yoh-Han Pao, Division Director, Electrical, Computer and Systems Engineering.

4:30 a.m.—Briefing on Geographical Distribution, Dr. John Talmage, Director, Communications Program, Division of Intergovernmental Science and Public Technolgy.

Friday, October 26, 1979—9:00 a.m. to 5:00 p.m.—Open:

9:00 a.m.—Discussion of Long Range Plan for Support of Research in Computer Science.

12:00 p.m.—Lunch.

1:00 p.m.—Continuation of morning discussion of Long Range Plan.

3:00 p.m.—Adjourn.

Reason for Closing: The Subcommittee will be reviewing grants and declination jackets which contain the names of applicant institutions and principal investigators and privileged information contained in declined proposals. This session will also include a review of the peer review documentation pertaining to applicants. These matters are within exemptions (4) and (6) of 5 U.S.C. 552b(c), Government in the Sunshine Act.

Authority to Close Meeting: This determination was made by the Committee Management Officer pursuant to provisions of section 10(d) of Pub. L. 92-463. The Committee Management Officer delegated the authority to make such determinations by the Acting Director, NSF on July 6, 1979.

Joyce F. Laplante,

Acting Committee Management Coordinator.

October 2, 1979.

[FR Doc. 79-31243 Filed 10-9-79; 8:45 am]

BILLING CODE 7555-01-M

Advisory Committee for Physiology, Cellular, and Molecular Biology; Subcommittee on Molecular Biology, Group A; Meeting

In accordance with the Federal Advisory Committee Act, Pub. L. 92-463, as amended, the National Science Foundation announces the following meeting:

Name: Subcommittee on Molecular Biology, Group A, of the Advisory committee for Physiology, Cellular and Molecular Biology.

Date and Time: October 22 and 23, 1979; 9:00 a.m. to 5:00 p.m. each day.

Place: Room 338, National Science Foundation, 1800 G Street NW., Washington, D.C. 20550.

Type of Meeting: Closed.

Contact Person: Dr. Arthur Kowalsky, Program Director, Biophysics Program, Room 330, National Science Foundation, Washington, D.C. 20550, telephone: 202-632-4260.

Purpose of Subcommittee: To provide advice and recommendations concerning support for research in Molecular Biology.

Agenda: To review and evaluate research proposals as part of the selection process for awards.

Reason for Closing: The proposals being reviewed include information of a proprietary or confidential nature, including technical information, financial data, such as salaries, and personal information concerning individuals associated with the proposals. These matters are within exemptions (4) and (6) of 5 U.S.C. 552b(c), Government in the Sunshine Act.

Authority to Close Meeting: This determination was made by the Committee Management Officer pursuant to provisions of section 10(d) of Pub. L. 92-463. The Committee Management Officer was delegated the authority to make such determinations by the Director, NSF, on July 6, 1979.

Joyce F. Laplante,

Acting Committee Management Coordinator.

October 2, 1979.

[FR Doc. 79-31244 Filed 10-9-79; 8:45 am]

BILLING CODE 7555-01-M

Advisory Committee for Physiology, Cellular and Molecular Biology, Subcommittee on Regulatory Biology; Meeting

In accordance with the Federal Advisory Committee Act, Pub. L. 92-463, as amended, the National Science Foundation announces the following meeting:

Name: Subcommittee on Regulatory Biology of the Advisory Committee for Physiology, Cellular and Molecular Biology.

Date and Time: October 24, 25, 26, 1979 (8:30 a.m. to 5:00 p.m.).

Place: Conference room 338, National Science Foundation, 1800 G Street, NW., Washington, D.C. 20550.

Type of Meeting: Closed.

Contact Person: Dr. Bruce L. Umminger, Program Director, Regulatory Biology, Room 333, National Science Foundation, Washington, D.C. 20550, telephone (202) 632-4238.

Purpose of Subcommittee: To provide advice and recommendations concerning support for research in regulatory biology.

Agenda: To review and evaluate research proposals and projects as part of the selection process for awards.

Reason for Closing: The proposals being reviewed include information of a proprietary or confidential nature, including technical information; financial data, such as salaries; and personal information concerning individuals associated with the proposals. These matters are within exemptions (4) and (6) of 5 U.S.C. 552b(c), Government in the Sunshine Act.

Authority to Close Meeting: This determination was made by the Committee, management Officer pursuant to provisions of section 10(d) of Pub. L. 92-463. The Committee Management Officer delegated the authority to make such determinations by the Acting Director, NSF on July 6, 1979.

Joyce Laplante,

Acting Committee Management Coordinator.

October 2, 1979.

[FR Doc. 79-31245 Filed 10-9-79; 8:45 am]

BILLING CODE 7555-01-M

Advisory Committee for Social and Economic Science, Subcommittee for Sociology; Meeting

In accordance with the Federal Advisory Committee Act. Pub. L. 92-463, the National Science Foundation announces the following meeting:

Name: Subcommittee for Sociology of the Advisory Committee for Social and Economic Science.

Date and Time: October 25-26, 1979, Thursday—9:00 am to 6:00 pm; Friday—9:00 am to 4:00 pm.

Place: Room 421, National Science Foundation, 1800 G Street, NW., Washington, D.C.

Type of Meeting: Closed.

Contact Person: Roland J. Liebert, Program Director for Sociology, Room 316, National

Science Foundation, Washington, D.C. 20550, telephone (202) 632-4204.
Purpose of Subcommittee: To provide advice and recommendation concerning support for research in the Sociology Program.
Agenda: To review and evaluate research proposals and projects as part of the selection process for awards.
Reason for Closing: The proposals being reviewed include information of a proprietary or confidential nature, including technical information; financial data, such as salaries, and personal information concerning individuals associated with the proposals. These matters are within exemptions (4) and (6) of 5 U.S.C. 552b(c), Government in the Sunshine Act.
Authority to Close Meeting: This determination was made by the Committee Management Officer pursuant to provisions of sections 10(d) of Pub. L. 92-463. The Committee Management Officer was delegated the authority to make such determinations by the Director, NSF, on July 6, 1979.

Joyce F. Laplante,
Acting Committee Management Coordinator.
October 2, 1979.

[FR Doc. 79-31243 Filed 10-9-79; 8:45 am]
BILLING CODE 7555-01-M

Advisory Committee for Behavioral and Neural Sciences, Subcommittee on Social and Developmental Psychology; Meeting

In accordance with the Federal Advisory Committee Act, as amended, Pub. L. 92-463, the National Science Foundation announces the following meeting:

Name: Subcommittee on Social and Developmental Psychology of the Advisory Committee for Behavioral and Neural Sciences.
Date and Time: October 25-26, 1979, 9:00 a.m. to 5:00 p.m. each day.
Place: Room 643, National Science Foundation, 1800 G Street, N.W., Washington, D.C. 20550.
Type of meeting: Closed.
Contact Person: Dr. Robert A. Baron, Program Director, Social and Developmental Psychology, Room 317, National Science Foundation, Washington, D.C. 20550, telephone (202-632-5714).
Purpose of Subcommittee: To provide advice and recommendations concerning support for research in Social and Developmental Psychology.
Agenda: To review and evaluate research proposals as part of the selection process for awards.
Reason for Closing: The proposals being reviewed include information of a proprietary or confidential nature, including technical information: financial data, such as salaries; and personal information concerning individuals associated with the proposals. These matters are within exemptions (4) and (6) of 5 U.S.C. 552b(c), Government in the Sunshine Act.
Authority to Close Meeting: This determination was made by the Committee Management Officer pursuant to provisions of section 10(d) of Pub. L. 92-463. The Committee Management Officer was delegated the authority to make such determinations by the Director, NSF, on July 6, 1979.

Joyce F. Laplante,
Acting Committee Management Coordinator.
October 2, 1979.

[FR Doc. 79-31241 Filed 10-9-79; 8:45 am]
BILLING CODE 7555-01-M

Advisory Committee For Social and Economic Science, Subcommittee on History and Philosophy of Science; Meeting

In accordance with the Federal Advisory Committee Act, as amended, Pub. L. 92-463, the National Science Foundation announces the following meeting:

Name: Subcommittee on History and Philosophy of Science Advisory Committee for Social and Economic Science.
Date and Time: October 26th and 27th, 1979; 9:00 a.m. to 5:00 p.m. each day.
Place: Room 536, National Science Foundation, 1800 G Street, NW., Washington, D.C. 20550.
Type of Meeting: Closed.
Contact Person: Dr. Ronald J. Overmann, Associate Program Director, History and Philosophy of Science Program, Room 312, National Science Foundation, Washington, D.C. 20550, telephone (202) 632-4182.
Purpose of Subcommittee: To provide advice and recommendations concerning support for research in History and Philosophy of Science.
Agenda: To review and evaluate research proposals as part of the selection process for awards.
Reason for Closing: The proposals being reviewed include information of a proprietary or confidential nature, including technical information; financial data, such as salaries; and personal information concerning individuals associated with the proposals. These matters are within exemptions (4) and (6) of 5 U.S.C. 552b(c), Government in the Sunshine Act.
Authority to Close: This determination was made by the Committee Management Officer pursuant to provisions of section 10(d) of Pub. L. 92-463. The Committee Management Officer was delegated the authority to make such determinations by the Director, NSF, on July 6, 1979.

Joyce F. Laplante,
Acting Committee Management Coordinator.
October 2, 1979.

[FR Doc. 79-31246 Filed 10-9-79; 8:45 am]
BILLING CODE 7555-01-M

Physically Handicapped in Science Program; Procedure for Proposal Submission

The National Science Foundation (NSF) plans in FY 1980 to make a small number of awards for projects to: (1) identify and provide information on the problems of the physically handicapped in becoming scientists and ways to overcome these problems, and (2) to develop student science training models directly involving handicapped students at the secondary and college levels.

Three types of projects will be supported: (1) science education models which directly involve groups of handicapped students, (2) workshops, and (3) experimental modification and adaption of existing science courses which have been modified for handicapped students. Proposals may request up to a maximum of $50,000 for each project. During FY 1979 available funds permitted the support of 15 projects at a cost of $613,940. Funding for FY 1980 is expected to remain at approximately the same level.

Guidelines for the Preparation of Proposals and Project Operation for FY 1980 may be requested directly from the Physically Handicapped in Science Program, Directorate for Science Education, National Science Foundation, Washington, D.C. 20550. The closing date for submission of proposals to the Physically Handicapped in Science Program is November 15, 1979. Questions may be directed to Dr. Robert Rehwoldt, 202-282-7150.

Joyce F. Laplante,
Acting Committee Management Coordinator.
October 2, 1979.

[FR Doc. 79-31251 Filed 10-9-79; 8.45 am]
BILLING CODE 7555-01-M

Proposals Accepted for Fundamental Earthquake Studies

Unsolicited research proposals for fiscal year 1980 under the Fundamental Earthquake Studies element of the Earthquake Prediction and Hazard Mitigation Program may be submitted at any time during the fiscal year to the Geophysics Program of the National Science Foundation.

The Fundamental Earthquake Studies element is concerned with in-depth studies and measurements of a basic nature directed toward the development of a more thorough understanding of earthquake phenomena.

Proposals may be submitted by researchers in accordance with NSF 78-41A "Grants for Scientific Research". Proposals will be evaluated by normal mail and panel review in competition

with all other proposals in Geophysics. Refer any questions to Dr. Roy E. Hanson, Program Director for Geophysics, National Science Foundation, 1800 G Street, NW., Washington, D.C. 20550. Telephone: (202) 632-4219.

Dr. Robin Brett,

Division Director, Earth Sciences.

October 2, 1979.

[FR Doc. 79-31252 Filed 10-9-79; 8:45 am]

BILLING CODE 7555-01-M

NUCLEAR REGULATORY COMMISSION

Docket No. 50-358 OL]

Cincinnati Gas & Electric Co., et al. (William H. Zimmer Nuclear Station); Notice of Resumption of Evidentiary Hearing

Notice is hereby given that, in accordance with the Licensing Board's Memorandum and Order of October 1, 1979, the evidentiary hearing in this operating license proceeding will resume at 2 p.m. on November 14, 1979, at the United States District Court, Room 805, U.S. Post Office and Courthouse, 5th and Walnut Streets, Cincinnati, OH 45202.

The session on November 14 will extend from 2-9 p.m. (with a break for dinner). The sessions on November 15 and 16 (to the extent necessary) will commence at 9 a.m. and that on November 16 will adjourn no later than 4 p.m. On November 14, 1979, prior to the evidentiary hearing, the Board will hear limited appearance statements from 9:30 a.m. until 12 noon, if necessary.

Dated at Bethesda, Maryland, this 1st day of October, 1979.

For the Atomic Safety and Licensing Board.

Charles Bechhoefer,

Chairman.

[FR Doc. 79-31224 Filed 10-9-79; 8:45 am]

BILLING CODE 7590-01-M

[Docket No. 50-10]

Commonwealth Edison Co.; Issuance of Amendment To Facility Operating License and Granting of Relief From ASME Section XI Inservice Inspection Requirements

The U.S. Nuclear Regulatory Commission (the Commission) has issued Amendment No. 31 to Facility Operating License No. DPR-2, issued to the Commonwealth Edison Company (the licensee), which revised the Technical Specifications for Unit 1 of Dresden Nuclear Power Station (the facility) located in Grundy County, Illinois. The amendment is effective as of its date of issuance.

This amendment revises the provisions of the Technical Specifications by replacing the existing inservice inspection requirements in Section 4.6.F with an inservice inspection program that meets the requirements of 10 CFR 50.55a(g).

By letter dated September 29, 1979, as supported by the related Safety Evaluation, the Commission has also granted relief from certain requirements of the ASME Code, Section XI, "Rules for Inservice Inspection of Nuclear Power Plant Components" to the licensee. The relief relates to the inservice inspection program for the facility. The ASME Code requirements are incorporated by reference into the Commission's rules and regulations in 10 CFR Part 50. The relief is effective as of its date of issuance.

The application for the amendment and request for relief comply with the standards and requirements of the Atomic Energy Act of 1954, as amended (the Act), and the Commission's rules and regulations. The Commission has made appropriate findings as required by the Act and the Commission's rules and regulations in 10 CFR Chapter I, which are set forth in the license amendment and letter and Safety Evaluation granting the relief. Prior public notice of this amendment was not required since the amendment does not involve a significant hazards consideration.

The Commission has determined that the issuance of this amendment and granting of this relief will not result in any significance environmental impact and that pursuant to 10 CFR § 51.5(d)(4) an environmental impact statment or negative declaration and environmental impact appraisal need not be prepared in connection with issuance of these actions.

For further details with repect to these actions, see (1) the application for amendment dated November 2, 1977, and licensee letters dated May 16, 1978, June 9, 1978, October 19, 1978 and March 7, 1979, (2) Amendment No. 31 to License No. DPR-2, (3) the Commission's related Safety Evaluation, and (4) the Commission's transmittal letter to the licensee dated September 28, 1979. All of these items are available for public inspection at the Commission's Public Document Room, 1717 H Street, NW., D.C. and at the Morris Public Library, 604 Library Street, Morris, Illinois 60451. A copy of items (2), (3) and (4) may be obtained upon request addressed to the U.S. Nuclear Regulatory Commission, Washington, D.C. 20555, Attention: Director, Division of Operating Reactors.

Dated at Bethesda, Maryland, this 28th day of September, 1979.

For the Nuclear Regulatory Commission.

Thomas V. Wambach,

Acting Chief, Division of Operating Reactors.

[FR Doc. 79-31225 Filed 10-9-79; 8:45 am]

BILLING CODE 7590-01-M

[Docket No. 50-250]

Florida Power & Light Co.; Issuance of Amendment to Facility Operating License

The U.S. Nuclear Regulatory Commission (the Commission) has issued Amendment No. 50 to Facility Operating License No. DPR-31 issued to Florida Power & Light company (the licensee), which revised Technical Specifications for operation of the Turkey Point Nuclear Generating, Unit No. 3 (the facility) located in Dade County, Florida. The amendment is effective as of the date of issuance.

The amendment permits continued operation of Turkey Point Plant Unit No. 3 for six equivalent full power months and an additional seven equivalent full power weeks from March 29, 1979, or until the next refueling outage, whichever occurs first.

The application for the amendment complies with the standards and requirements of the Atomic Energy Act of 1954, as amended (the Act), and the Commission's rules and regulations. The Commission has made appropriate findings as required by the Act and the Commission's rules and regulations in 10 CFR Chapter I, which are set forth in the license amendment. Prior public notice of this amendment was not required since this amendment does not involve a significant hazards consideration.

The Commission has determined that the issuance of this amendment will not result in any significant environmental impact and that pursuant to 10 CFR 51.5(d)(4) an evironmental impact statement or negative declaration and environmental impact appraisal need not be prepared in connection with issuance of this amendment.

For further details with respect to this action, see (1) the application for amendment dated August 7, 1979, (2) Amendment No. 50 to License No. DPR-31, and (3) the Commission's related Safety Evaluation. All of these items are available for public inspection at the Commission's Public Document room, 1717 H Street, NW., Washington, D.C. and at the Environmental and Urban Affairs Library, Florida International University, Miami, Florida 33199. A copy

of items (2) and (3) may be obtained upon request addressed to the U.S. Nuclear Regulatory Commission, Washington, D.C. 20555, Attention: Director, Division of Operating Reactors.

For the Nuclear Regulatory Commission,

Charles Trammell,

Acting Chief, Operating Reactors Branch No.1, Division of Operating Reactors.

[FR Doc. 79-31223 Filed 10-9-79; 8:45 am]

BILLING CODE 7590-01-M

[Docket No. 50-321]

Georgia Power Co. et al.; Notice of Issuance of Amendment to Facility Operating License

The U.S. Nuclear Regulatory Commission (the Commission) has issued Amendment No. 72 to Facility Operating License No. DPR-57, issued to Georgia Power Company, Oglethorpe Electric Membership Corporation, Municipal Electric Association of Georgia, and City of Dalton, Georgia, which revised Technical Specifications for operation of the Edwin I. Hatch Nuclear Plant, Unit No. 1 (the facility) located in Appling County, Georgia. The amendment is effective as of September 9, 1979.

The amendment revises the surveillance requirements for the Residual Heat Removal Service Water System by changing the minimum system head from 938 to 847 feet of water.

The application for the amendment complies with the standards and requirements of the Atomic Energy Act of 1954, as amended (the Act), and the Commission's rules and regulations. The Commission has made appropriate findings as required by the Act and the Commission's rules and regulations in 10 CFR Chapter I, which are set forth in the license amendment. Prior public notice of this amendment was not required since the amendment does not involve a significant hazards consideration.

The Commission has determined that the issuance of this amendment will not result in any significant environmental impact and that pursuant to 10 CFR Section 51.5(d)(4) an environmental impact statement, or negative declaration and environmental impact appraisal need not to be prepared in connection with issuance of this amendment.

For further details with respect to this action, see (1) the application for amendment dated September 9, 1979, (2) Amendment No. 72 to License No. DPR-57, and (3) the Commission's related Safety Evaluation. All of these items are available for public inspection at the Commission's Public Document Room, 1717 H Street, N.W., Washington, D.C. and at the Appling County Public Library, Parker Street, Baxley, Georgia 31513. A copy of items (2) and (3) may be obtained upon request addressed to the U.S. Nuclear Regulatory Commission, Washington, D.C. 20555, Attention: Director, Division of Operating Reactors.

Dated at Bethesda, Maryland, this 1st day of October 1979.

For the Nuclear Regulatory Commission.

Thomas A. Ippolito,

Chief, Operating Reactors Branch #3, Division of Operating Reactors.

[FR Doc. 79-31228 Filed 10-9-79; 8:45 am]

BILLING CODE 7590-01-M

[Docket No. 50-466 CP]

Houston Lighting & Power Co. (Allens Creek Nuclear Generating Station, Unit 1)

October 2, 1979.

On October 1, 1979, the Appeal Board issued a Memorandum, 10NRC——, ALAB-565. We adopt the suggestion contained therein. Accordingly, we delete the first paragraph and footnote 2 at page two of our Supplemental Order Re: Special Prehearing Conference dated September 13, 1979, (44 Fed. Reg. 54371, September 19, 1979), and, in lieu thereof, we substitute the following paragraph and footnote:

During the course of the special prehearing conference, the intervening parties and the petitioners for leave to intervene may present oral argument upon their own behalf in response to the Applicant's and/or the NRC Staff's objections to the admissibility of said parties' and petitioners' proposed contentions.[2]

It is so ordered.

Dated at Bethesda, Maryland this 2nd day of October 1979.

For the Atomic Safety and Licensing Board.

Sheldon J. Wolfe,

Chairman.

[FR Doc. 79-31221 Filed 10-9-79; 8:45 am]

BILLING CODE 7590-01-M

[2] Accordingly, we grant Mr. Doherty's Motion That Petitioners To Intervene Who Responded To The May And September 1978 Federal Register Notices Be Permitted To Support Unadmitted Contentions dated August 30, 1979. Further, as indicated above, we extend the permission to make oral arguments to those petitioners who filed petitions for leave to intervene by July 18, 1979 pursuant to the Supplementary Notice Of Intervention Procedures dated June 12, 1979 (44 FR 35062, June 18, 1979) and who filed contentions by September 14, 1979 pursuant to the order Scheduling Special Prehearing Conference dated August 6, 1979 (44 FR 47653, August 14, 1979).

[Docket No. 50-309]

Maine Yankee Atomic Power Co.; Notice of Issuance of Amendment to Facility Operating License

The U.S. Nuclear Regulatory Commission (the Commission) has issued Amendment No. 45 to Facility Operating License No. DPR-36, issued to Maine Yankee Atomic Power Company (the licensee), which revised the Technical Specifications for operation of the Maine Yankee Atomic Power Station (the facility), located in Lincoln County, Maine. The amendment is effective as of its date of issuance.

This amendment revises the Technical Specifications by adding surveillance regarding emergency core cooling system flow distribution.

The application for amendment complies with the standards and requirements of the Atomic Energy Act of 1954, as amended (the Act), and the Commission's rules and regulations. The Commission has made appropriate findings as required by the Act and the Commission's rules and regulations in 10 CFR Chapter I, which are set forth in the license amendment. Prior public notice of this amendment was not required since the amendment does not involve a significant hazards consideration.

The Commission has determined that the issuance of this amendment will not result in any significant environmental impact and that pursuant to 10 CFR 51.5(d)(4) an environmental impact statement or negative declaration and environmental impact appraisal need not be prepared in connection with issuance of this amendment.

For further details with respect to this action, see (1) the application for amendment dated September 16, 1977, (2) Amendment No. 45 to License No. DPR-36, and (3) the Commission's related Safety Evaluation. All of these items are available for public inspection at the Commission's Public Document Room, 1717 H Street, N.W., Washington, D.C. and at the Wiscasset Public Library Association, High Street, Wiscasset, Maine. A copy of items (2) and (3) may be obtained upon request addressed to the U.S. Nuclear Regulatory Commission, Washington, D.C. 20555, Attention: Director, Division of Operating Reactors.

Dated at Bethesda, Maryland, this 27th day of September 1979.

For the Nuclear Regulatory Commission.

Robert W. Reid,

Chief, Operating Reactors Branch #4, Division of Operating Reactors.

[FR Doc. 79-31227 Filed 10-9-79; 8:45 am]

BILLING CODE 7590-01-M

Operating Licenses Under Antitrust Review Time for Submission of Views on Antitrust Matters

The Commission has recently delegated authority and approved procedures for the Director of Nuclear Reactor Regulation to review operating license applications to determine whether there have been "significant changes" in a licensee's activities or proposed activities subsequent to the previous antitrust review under section 105c(2) of the Atomic Energy Act of 1954, as amended, 42 U.S.C. 2135c(2) in connection with the construction permit application.

The following operating license applications are currently under antitrust review:

Susquehanna 1 and 2,
Pennsylvania Power & Light,
Allegheny Electric Cooperative,
Docket Nos. 50-387A and 50-388A,
CPs authorized 11/2/73.
San Onofre 2 and 3,
Southern California Edison,
Docket Nos. 50-361A and 50-362A,
CPs authorized 10/18/73.
Grand Gulf 1 and 2,
Mississippi Power and Light
Docket Nos. 50-416A and 50-417A,
CPs authorized 5/3/74.
Waterford 3, Louisiana Power & Light, Docket No. 50-382A, CP authorized 5/14/74.
Bellefonte 1 and 2, Tennessee Valley Authority, Docket Nos. 50-438A and 50-439A, CPs authorized 9/17/74.
Bryon 1 and 2, Commonwealth Edison, Docket Nos. 50-454A and 50-455A, CPs authorized 12/13/74.
Braidwood 1 and 2, Commonwealth Edison, Docket Nos. 50-456A and 50-457A, CPs authorized 1/13/75.

Operating license applications and antitrust information in response to NRC's Regulatory Guide 9.3 have been submitted for the above-named plants. This information and additional material submitted in response to additional staff questions on San Onofre, Waterford, Susquehanna, and Grand Gulf are available in the respective local public document rooms and in the NRC Public Document Room at 1717 H Street, NW., Washington, DC.

On completion of staff antitrust review of each of the above-named applications, the Director of Nuclear Reactor Regulation will issue initial finding as to whether there have been "significant changes" under section 105c(2) of the Act. A copy of this finding will be published in the Federal Register and will be sent to the Washington and local public document rooms and to those persons providing comments or information in response to this notice. If the initial finding concludes that there have not been any significant changes, requests for reevaluation may be submitted for a period of 60 days after the date of the Federal Register notice. The results of any reevaluations that are requested, will also be published in the Federal Register and copies sent to the Washington and local public document rooms.

Any person who wishes to have his views considered with respect to significant changes related to antitrust matters which have occurred in the licensee's activities since the construction permit antitrust reviews for the above-named plants should submit such views to the U.S. Nuclear Regulatory Commission, Washington, DC 20555, Attention: Chief, Antitrust and Indemnity Group, Office of Nuclear Reactor Regulation, on or before November 9, 1979.

For the Nuclear Regulatory Commission.

Jerome Saltzman,

Chief, Antitrust and Indemnity Group, Office of Nuclear Reactor Regulation.

[FR Doc. 79-31219 Filed 10-9-79; 8:45 am]
BILLING CODE 7590-01-M

[Docket Nos. 50-522, 50-523]

Puget Sound Power & Light Co. et al. (Skagit Nuclear Power Project Units 1 and 2); Schedule of Hearings

1. Additional evidentiary hearings are hereby scheduled to begin on Thursday, October 25, 1979 at 9:00 a.m. and to carry forward on Friday and Saturday, October 26 and October 27 and thereafter, on October 29 through November 2. The subjects of the hearings will be as follows: Geology and Seismology; Site Suitability for Development of Evacuation Plans; Alternate Sources: Coal vs. Nuclear (health effects, excluding radon 222)—Gotchy testimony; and Floodplain Management.

2. The place of the hearings is Room 3086, New Federal Building, 915 Second Avenue, Seattle, Washington.

3. The order of presentation will be prepared by the Applicants after consultation with the other parties and copies of the order of presentation will be submitted to members of the Board in time so that each member will receive his copy by Monday, October 22, 1979.

4. In the event the agenda of the above scheduled hearings are not completed within the time allotted, the Board anticipates the scheduling of additional hearings, as may be necessary, on Thursday, Friday and Saturday, November 8, 9 and 10, 1979, and during the week beginning Monday, November 26, 1979.

5. The Board's focus on the testimony about Geology and Seismology will be on what the answers to the below three questions. It will be on answers of the Board's questions about earlier testimony of the witnesses. The referenced three questions are:

A. What is the worst-case seismic event having reasonable probability of occurrence affecting the proposed plant during its lifetime?

B. What is the corresponding ground acceleration, including allowance for uncertainty, that should be used for purpose of safe shutdown plant design?

C. Does the proposed seismic structural design of the plant accommodate this safe shutdown ground acceleration value?

The parties are advised to bear in mind the Board's interest in the ultimate answers to the above three questions while they are examining witnesses on Geology and Seismology; otherwise, their examinations of the witnesses, especially if tangential or remote to the Board's designated central interest, may prove to be of little or no value to the proceeding and indeed, may be curtailed.

6. The parties are put on notice that 10 CFR 2.743(b) is applicable to the forthcoming hearings with the exception that with respect to the testimony on Geology and Seismology for SCANP and FOB/CFSP the requirement of fifteen days of advance notice of proposed testimony is reduced to seven days.

Done this 1st day of October 1979 at Washington, D.C.

Atomic Safety & Licensing Board.

Valtine B. Deale,

Chairman.

[FR Doc. 79-31222 Filed 10-9-79; 8:45 am]
BILLING CODE 7590-01-M

[Docket No. 50-206]

Southern California Edison Co. and San Diego Gas & Electric Co.; Notice of Issuance of Amendment to Provisional Operating License and Granting of Relief From ASME Section XI Inservice Inspection Requirements

The U.S. Nuclear Regulatory Commission (the Commission) has issued Amendment No. 46 to Provisional Operating License No. DPR-13, issued to Southern California Edison Company and San Diego Gas and Electric Company (the licensees), which revised the Technical Specifications for operation of the San Onofre Nuclear Generating Station, Unit No. 1 (the facility), located in San Diego County, California. The amendment is effective as of its date of issuance.

The amendment revised the Technical Specifications to replace the current

inservice inspection requirements with an inservice inspection program that meets the requirements of 10 CFR 50.55a(g).

By letter dated Spetember 26, 1979, as supported by the related safety evaluation, the Commission has also granted relief from certain requirements of the ASME Code, Section XI, "Rules for Inservice Inspection of Nuclear Power Plant Components" to the licensees. The relief relates to the inservice inspection program for the facility. The ASME Code requirements are incorporated by reference into the Commission's rules and regulations in 10 CFR Part 50. The relief is effective as of its date of issuance.

The application for the amendment and request for relief comply with the standards and requirements of the Atomic Energy Act of 1954, as amended (the Act), and the Commission's rules and regulations. The Commission has made appropriate findings as required by the Act and the Commission's rules and regulations in 10 CFR Chapter I, which are set forth in the license amendment and letter and safety evaluation granting relief. Prior public notice of this amendment was not required since the amendment does not involve a significant hazards consideration.

The Commission has determined that the issuance of this amendment and the granting of the relief will not result in any significant environmental impact and that pursuant to 10 CFR 51.5(d)(4) an environmental impact statement or negative declaration and environmental impact appraisal need not be prepared in connection with issuance of these actions.

For further details with respect to these actions, see (1) the application for amendment dated June 24, 1977 (Proposed Change No. 60), and supporting information submitted by letters dated September 28, 1977, May 26, 1978, and September 4, 1979, (2) Amendment No. 46 to License No. DPR-13, (3) the Commission's related Safety Evaluation, and (4) the Commission's letter to the licensee dated September 26, 1979. All of these items are available for public inspection at the Commission's Public Document Room, 1717 H Street, NW., Washington, D.C. and at the Mission Viejo Branch Library, 24851 Chrisanta Drive, Mission Viejo, California 92676. A single copy of items (2), (3) and (4) may be obtained upon request addressed to the U.S. Nuclear Regulatory Commission, Washington, D.C. 20555, Attention: Director, Division of Operating Reactors.

Dated at Bethesda, Maryland, this 26th day of September, 1979.

For the Nuclear Regulatory Commission.

Thomas V. Wambach,

Acting Chief, Operating Reactors Branch #2, Division of Operating Reactors.

[FR Doc. 79-31226 Filed 10-9-79; 8:45 am]

BILLING CODE 7590-01-M

[Docket Nos. 50-445A and 50-446A]

Texas Utilities Generating Co.; Notice of Receipt of Attorney General's Advice and Time for Filing of Petitions To Intervene on Antitrust Matters

The Commission has received, pursuant to section 105c of the Atomic Energy Act of 1954, as amended, the following additional advice from the Attorney General of the United States, dated September 25, 1979, with respect to an operating license application for Comanche Peak Steam Electric Station, Units No. 1 and No. 2:

You have requested our further advice pursuant to Section 105c of the Atomic Energy Act of 1954, as amended, with regard to the participation by the Brazos Electric Power Cooperative, Inc. Brazos) in the Comanche Peak Steam Electric Station, Units 1 and 2, NRC Docket Nos. 50-445A and 50-446A.

The Comanche Peak Steam Electric Station will consist of two units, each rated at 1150 megawatts. The station is being built and will be operated by Texas Utilities Generating Company (TUGCO), a subsidiary of Texas Utilities Company (TU).[1] By the terms of the agreement between TUGCO and Brazos, Brazos will secure a 3.8 percent ownership interest, or 44 MW in each unit. Brazos is a generation and transmission cooperative providing power to a number of member distribution cooperatives in central Texas.

By letter to you dated August 1, 1978, the Department advised the Nuclear Regulatory Commission (NRC) that an antitrust hearing would be necessary in reference to the operating license application of TUGCO. That antitrust hearing, currently in the final stages of discovery, is scheduled to begin in February of 1980. The basis for the Department's recommendation that an antitrust hearing be conducted on the Comanche Peak operating license was that TU had combined with other utilities in Texas and agreed to disconnect from any other electrical utility that commenced operation in interstate commerce. In light of TU's dominant position in Texas, the fact that it had disconnected from other electric utilities in 1976 when those utilities went into interstate commerce, and in view of changed circumstances in the electric utility markets in Texas, as set forth in my letter to you dated February 21, 1978, regarding the South Texas Project, NRC Docket Nos. 50-498A and 50-499A, the Department concluded that an antitrust hearing was necessary.

The contractual agreements between Brazos and the TU subsidiaries, including the Comanche Peak Ownership Agreement and Transmission Agreement, contained restrictions which, in effect, foreclose Brazos from interconnecting with and engaging in the buying and selling of power or energy with electric utilities that operate in interstate commerce. It is TU's "intrastate only" policy and practice which is the subject of the present Comanche Peak antitrust hearing. Resolution of the antitrust issues in that hearing will necessarily resolve any antitrust questions raised by these restrictions in the contractual agreements between Brazos and TU subsidiaries.

Brazos has agreed to be bound by the outcome of the present Comanche Peak antitrust hearing, including the resolution of the intrastate only restrictions in its contracts with TU subsidiaries (See attached letter). In light of this agreement, and the absence of other evidence that Brazos' participation in the Comanche Peak units would create or maintain a situation [sic] inconsistent with the antitrust laws, the Department believes that an antitrust hearing on this application is not necessary.

Attachment

September 14, 1979.

Brazos Electric Power Cooperative, Inc., Comanche Peak Electric Station, NRC Docket Nos. 50-445A and 50-446A, USDOJ File No. DAK:FHP 60-57-0.

This letter is in response to the letter of Mr. Fred Parmenter to me dated September 10, 1979, concerning the anti-trust review of the above license applications by the Department of Justice and is furnished to you for the Department's use in rendering its anti-trust advice to the Nuclear Regulatory Commission for the applications in the above dockets.

The Brazos Electric Power Cooperative, Inc. (Brazos) is a signatory to contracts with subsidiaries of the Texas Utilities Company that contain language which the Justice Department has construed as preventing or limiting Brazos from operating in, or interconnecting with other electric utilities that are operating in interstate commerce. In order to avoid the necessity of an anti-trust hearing on Brazos' participation in the Comanche Peak Steam Electric Station, NRC Docket No. 50-445A and 50-446A, Brazos makes the following representations:

(1) While Brazos is a party to contracts that contain intrastate only provisions, Brazos did not request that such provisions be included in the contracts and would not object to such provisions being deleted from the contracts or enjoined, should such deletion be ordered or an unjunction be issued in an administrative or judicial proceeding or be agreed to by the other signatories to the contracts.

(2) Brazos agrees to be bound by the outcome of the present operating license anti-trust proceeding involving the Comanche Peak Steam Electric Station, including any conditions that are attached to the operating license as a result of that proceeding.

---

[1] The designation "TU" comprises the Texas Utilities Company and its various operating and service subsidiary companies including Dallas Power and Light Company, Texas Electric Service Company, and Texas Power and Light Company, each of of [sic] which is a joint owner of the Texas Utilities Generating Company (TUGCO).

If you find that you need further information concerning this matter, please let me know.

Brazos Electric Power Cooperative, Inc.

Any person whose interest may be affected by this proceeding may, pursuant to § 2.714 of the Commission's "Rules of Practice," 10 CFR Part 2, file a petition for leave to intervene and request a hearing on the antitrust aspects of the application. Petitions for leave to intervene and requests for hearing shall be filed by November 9, 1979 either (1) by delivery to the NRC Docketing and Service Branch at 1717 H Street NW, Washington, DC, or (2) by mail or telegram addressed to the Secretary, US Nuclear Regulatory Commission, Washington, DC 20555, Attn: Docketing and Service Branch.

For the Nuclear Regulatory Commission.

Jerome Saltzman,

Chief, Antitrust and Indemnity Group, Office of Nuclear Reactor Regulation.

[FR Doc. 79-31220 Filed 10-9-79; 8:45 am]

BILLING CODE 7590-01-M

Interim Statement of Policy and Procedure

AGENCY: U.S. Nuclear Regulatory Commission.

ACTION: Statement of Policy.

SUMMARY: The March 28, 1979, accident at Unit No. 2 of the Three Mile Island nuclear plant is being investigated by the Nuclear Regulatory Commission and a number of other bodies. These investigations may result in significant changes in the Commission's regulatory policy and in the procedures it employs to license nuclear power facilities. The Commission is currently considering a range of options dealing with the extent to which its regulatory structure should be modified during the pendency of the investigations. This statement is being issued to clarify the Commission's previously announced policy decisions on how licensing proceedings should be conducted while the Commission considers changes in the procedures by which it exercises supervision over adjudicatory licensing decisions.

The Commission has determined that new construction permits, limited work authorizations, or operating licenses for any nuclear power reactors shall be issued only after action of the Commission itself. The Commission will shortly decide the procedures by which its further action will be taken. In these circumstances no full adjudicatory decision which authorizes issuance of such a permit, authorization or license shall be issued by an Atomic Safety and Licensing Board except after further order of the Commission itself. However, all other adjudicatory proceedings including enforcement and license amendment proceedings may continue. Further, the issuance of appellate decisions and partial initial decisions may also continue. The Commission's staff should continue its present policy of informing the Commission, NRC licensees, and NRC applicants of staff's views on the implications of the Three Mile Island accident in general and on what corrective or preventive actions are called for in specific cases as a result of its analysis of the accident. In particular, this means the staff is authorized to proceed with licensing reviews and present evidence on the implications of the accident for resolution of proceedings now before Atomic Safety and Licensing Boards. Of course, staff is free to conclude on a case-by-case basis that further consideration is required before it is prepared to speak to a particular issue or in a particular proceeding, and it may appropriately communicate any such conclusion to the Commission's adjudicatory boards. The Commission views these measures as necessary to preserve the status quo without under disruption to licensing proceedings now underway.

The Commission has received petitions from applicants in the Black Fox and Skagit proceedings requesting issuance of directives on the future conduct of those proceedings. This statement is intended to serve as the Commission's interim response to those requests. Final responses must await the Commission's generic policy decision on licensing.

Dated at Washington, D.C., this 4th day of October 1979.

For the Commission.

Samuel J. Chilk,

Secretary of the Commission.

[FR Doc. 79-31330 Filed 10-9-79; 8:45 am]

BILLING CODE 7590-01-M

SECURITIES AND EXCHANGE COMMISSION

[File No. 81-571]

American International Pictures, Inc., Application and Opportunity for Hearing

September 27, 1979.

Notice is hereby given that American International Pictures, Inc. ("AIP") ("Applicant") has filed an application pursuant to Section 12(h) of the Securities Exchange Act of 1934, as amended (the "1934 Act"), seeking an exemption from the requirement to file reports pursuant to Sections 13 and 15(d) of the 1934 Act.

The Applicant states in part:

(1) Applicant, as a result of the merger into a subsidiary of Filmways, Inc. ("Filmways"), has become a wholly-owned subsidiary of that company, and no longer has shares of its stock in the hands of the public.

(2) The former AIP stockholders, as a result of the merger will receive all communications of Filmways, including year-end financial and narrative information in the Filways 10-K and annual report to stockholders, and other periodic reports and notices.

(3) Applicant's common stock is no longer quoted on NASDAQ.

In the absence of an exemption Applicant will be required to file certain periodic reports with the Commission. The Applicant contends that no useful purpose would be served in filing the required periodic reports because there are no longer public investors or trading interest in its securities.

For a more detailed statement of the information presented, all persons are referred to said application which is on file in the Office of the Commission at 1100 L Street, NW., Washington, D.C. 20549.

Notice is further given that any interested, person not later than October 22, 1979, may submit to the Commission in writing his views or any substantial facts bearing on the application or the desirability of a hearing thereon. Any such communication or request should be addressed: Secretary, Securities and Exchange Commission, 500 North Capitol Street, NW., Washington, D.C. 20549, and should state briefly the nature of the interest of the person submitting such information or requesting the hearing, the reason for such request, and the issues of fact and law raised by the application which he desires to controvert.

Persons who request a hearing or advice as to whether a hearing is ordered will receive any notices and orders issued in this matter, including the date of the hearing (if ordered) and any postponements thereof. At any time after said date, an order granting the application may be issued upon request or upon the Commission's own motion.

For the Commission, by the Division of Corporation Finance pursuant to delegated authority.

George A. Fitzsimmons,

Secretary.

[FR Doc. 79-31270 Filed 10-9-79; 8:45 am]

BILLING CODE 8010-01-M

[File No. 81-586]

Empire Fire & Marine Insurance Co.; Application and Opportunity for Hearing

September 27, 1979.

Notice is hereby given that Empire Fire & Marine Insurance Company ("Applicant") has filed an application pursuant to Section 12(h) of the Securities Exchange Act of 1934, as amended (the "1934 Act") for exemption from the reporting requirements of Section 15(d) of the 1934 Act.

The Application states, in part:

1. Applicant, a Nebraska corporation, is a multiple-line casualty and property insurance carrier;

2. The United States Branch of Zurich Insurance Company, a Swiss corporation, owns in excess of 98% of the outstanding common stock of Applicant. As of May 31, 1979 there were 157 shareholders of Applicant's stock in addition to Zurich;

3. Applicant will continue to be subject to the regulation and reporting requirements of the Nebraska Department of Insurance which requires the filing of public disclosure documents; and

4. Applicant will undertake to inform its remaining public shareholders of the availability of these reports and to furnish them to requesting shareholders.

In the absence of an exemption, Applicant is required to file certain reports with the Commission pursuant to Section 15(d) of the 1934 Act, including an annual report on Form 10-K for the fiscal year ended December 31, 1979. Applicant argues that no useful purpose would be served in filing the required periodic reports.

For a more detailed statement of the information presented, all persons are referred to the application which is on file in the office of the Commission at 1100 L Street, NW., Washington, D.C. 20549.

Notice is further given that any interested person not later than October 22, 1979, may submit to the Commission in writing his views or any substantial facts bearing on this application or the desirability of a hearing thereon. Any such communication or request should be addressed: Secretary, Securities and Exchange Commission, 500 North Capitol Street, NW., Washington, D.C. 20549, and should state briefly the nature of the interest of the person submitting such information or requesting the hearing, the reason for such request, and the issues of fact and law raised by the application which he desires to controvert.

Persons who request a hearing or advice as to whether a hearing is ordered will receive any notices and orders issued in this matter, including the date of the hearing (if ordered) and any postponements thereof. At any time after said date, an order granting the application may be issued upon request or upon the Commission's own motion.

For the Commission; by the Division of Corporation Finance, pursuant to delegated authority.

George A. Fitzsimmons,

Secretary.

[FR Doc. 79-31267 Filed 10-9-79; 8:45 am]

BILLING CODE 8010-01-M

[Release No. 10889; 811-2622]

First Income Shares, Inc.; for Order Declaring That Applicant Has Ceased To Be an Investment Company

October 3, 1979.

Notice is hereby given that First Income Shares, Inc. ("Applicant"), 120 Wall Street, New York, New York 10005, registered under the Investment Company Act of 1940 ("Act") as an open-end, diversified, management investment company, filed an application on April 9, 1979, requesting an order of the Commission, pursuant to Section 8(f) of the Act, declaring that Applicant has ceased to be an investment company as defined by the Act. All interested persons are referred to the application on file with the Commission for a statement of the representations contained therein, which are summarized below.

Applicant states that it registered under the Act on February 17, 1976, under the name Chestnut Monthly Income Fund, Inc., which name was changed to First Income Shares, Inc., on July 15, 1976. The application further states that commencing February 1, 1977, 3,000,000 shares of Applicant were offered to the public in an underwritten offering headed by Drexel, Burnham and Co. The application states that the offering was made with the intentions, disclosed in Applicant's prospectus, that immediately following the closing of the underwriting: (1) The assets of Applicant would be exchanged for shares of First Investors Fund for Income, Inc. ("First Investors"), at net asset value, and (2) Applicant would then be dissolved. According to the application, the underwritten offering closed on February 15, 1977, and on February 24, 1977, 1,398,607 shares of Applicant were exchanged for shares of First Investors. The application further states that the exchange of shares was authorized by Applicant's Board of Directors and was made on the basis of relative net asset values per share, which on the day of the exchange were $10.98 for Applicant and $9.02 for First Investors. According to the application, the aggregate value of the shares of Applicant involved in the exchange was $15,356,704.86.

Applicant states that as of the date of the filing of the application, it had no assets or liabilities, and was not a party to any litigation or administrative proceeding. Applicant further states that it is not engaged and does not propose to engage in any business activities other than those necessary for the winding up of its affairs and that there are no shareholders of Applicant to whom distributions in complete liquidation of their interests have not been made. According to the application, an application for dissolution was made with and granted by the State of Maryland on April 7, 1977.

Section 8(f) of the Act provides, in pertinent part, that when the Commission, upon application, finds that a registered investment company has ceased to be an investment company it shall so declare by order and, upon taking effect of such order, the registration of such company under the Act shall cease to be in effect.

Notice is further given that any interested person may, not later than October 26, 1979, at 5:30 p.m., submit to the Commission in writing a request for a hearing on the matter accompanied by a statement as to the nature of his interest, the reason for such request, and the issues, if any, of fact or law proposed to be controverted, or he may request that he be notified if the Commission shall order a hearing thereon. Any such communication should be addressed: Secretary, Securities and Exchange Commission, Washington, D.C. 20549. A copy of such request shall be served personally or by mail upon Applicant at the address stated above. Proof of such service (by affidavit or, in the case of an attorney-at-law, by certificate) shall be filed contemporaneously with the request. As provided by Rule 0-5 of the rules and regulations promulgated under the Act, an order disposing of the application will be issued as of course following said date unless the Commission thereafter orders a hearing upon request or upon the Commission's own motion. Persons who request a hearing, or advice as to whether a hearing is ordered, will receive any notices and orders issued in this matter, including the date of the hearing (if ordered) and any postponements thereof.

For the Commission, by the Division of Investment Management, pursuant to delegated authority.

George A. Fitzsimmons,

Secretary.

[FR Doc. 79-31273 Filed 10-9-79; 8:45 am]

BILLING CODE 8010-01-M

[File No. 81-585]

Houdaille Industries, Inc.; Application and Opportunity for Hearing

September 27, 1979.

Notice is hereby given that Houdaille Industries, Inc. ("Applicant") has filed an application pursuant to Section 12(h) of the Securities Exchange Act of 1934, as amended (the "1934 Act"), seeking an exemption from the requirement to file reports pursuant to Sections 13 and 15(d) of the 1934 Act.

The Applicant states in part:

1. The Applicant was a publicly held company with two classes of securities registered pursuant to Section 12(b) of the 1934 Act, and was subject to the reporting provisions of Sections 13 and 15(d) of the 1934 Act.

2. Pursuant to an Agreement of Merger, dated as of March 6, 1979, a wholly owned subsidiary of HH Holdings, Inc., itself a privately held company, was merged into Houdaille. Each outstanding share of Houdaille common stock was converted into the right to receive $40, and there are no remaining public investors.

3. Applicant, after termination of its Section 12(b) registration pursuant to Rule 12g-4 of the 1934 Act, is now subject to the reporting provisions of Section 15(d) of the 1934 Act.

In the absence of an exemption Applicant will be required to file periodic reports with the Commission through December 31, 1979.

The Applicant contends that no useful purpose would be served in filing the periodic reports because there are no longer public investors or trading interest in its securities.

For a more detailed statement of the information presented, all persons are referred to said application which is on file in the Office of the Commission at 1100 L Street, NW., Washington, D.C. 20549.

Notice is further given that any interested person not later than October 22, 1979, may submit to the Commission in writing his views or any substantial facts bearing on the application or the desirability of a hearing thereon. Any such communication or request should be addressed: Secretary, Securities and Exchange Commission, 500 North Capitol Street, NW., Washington, D.C. 20549, and should state briefly the nature of the interest of the person submitting suh information or requesting the hearing, the reason for such request, and the issues of fact and law raised by the application which he desires to controvert.

Persons who request a hearing or advice as to whether a hearing is ordered will receive any notices and orders issued in this matter, including the date of the hearing (if ordered) and any postponements thereof. At any time after said date, an order granting the application may be issued upon request or upon the Commission's own motion.

For the Commission, by the Division of Corporation Finance, pursuant to delegated authority.

George A. Fitzsimmons,

Secretary.

[FR Doc. 79-31269 Filed 10-9-79; 8:45 am]

BILLING CODE 8010-01-M

[File No. 81-573]

Margo's La Mode, Inc.; Application and Opportunity for Hearing

September 27, 1979.

Notice is hereby given that Margo's La Mode, Inc. ("Applicant") has filed an application pursuant to Section 12(h) of the Securities Exchange Act of 1934, as amended (the "Act"), seeking an exemption from the requirement to file reports pursuant to Sections 13 and 15(d) of the Act.

The Applicant states in part:

1. The Applicant was a publicly-held company with a class of securities registered pursuant to Section 12(g) of the Act, and was thus subject to the reporting provisions of Section 13 of the Act.

2. On July 26, 1979, with shareholder approval, the Applicant was merged with Alexander's Subsidiary Corporation, a wholly-owned subsidiary of Alexander's Holding Corporation which was solely owned by Alexander's, Inc.

3. As a result of the merger, all the issued and outstanding shares of common stock of the Applicant were acquired by Alexander's Holding Corporation and Applicant's shareholders are entitled to receive $10.30 in cash per share.

4. After termination of its Section 12(g) registration on November 5, 1979, Applicant is subject to the reporting provisions of Section 15(d) of the Act.

In the absence of an exemption, Applicant will be required to file certain periodic reports with the Commission for the fiscal year ending in 1980.

The Applicant contends that no useful purpose would be served in filing the periodic reports because none of its securities is publicly held, and its common stock is no longer publicly traded.

For a more detailed statement of the information presented, all persons are referred to said application which is on file in the Office of the Commission at 500 North Captiol Street, N.W., Washington, D.C. 20549.

Notice is further given that any interested person not later than October 22, 1979, may submit to the Commission in writing his views or any substantial facts bearing on the application or the desirability of a hearing thereon. Any such communication or request should be addressed: Secretary, Securities and Exchange Commission, 500 North Capitol Street, N.W., Washington, D.C. 20549, and should state briefly the nature of the person submitting such information or requesting the hearing, the reason for such request, and the issues of fact and law raised by the application which he desires to controvert.

Persons who request a hearing or advice as to whether a hearing is ordered will receive any notices and orders issued in this matter, including the date of the hearing (if ordered) and any postponements thereof. At any time after said date, an order granting the application may be issued upon request or upon the Commission's own motion.

For the Commission, by the Division of Corporation Finance, pursuant to delegated authority.

George A. Fitzsimmons,

Secretary.

[FR Doc. 79-31286 Filed 10-9-79; 8:45 am]

BILLING CODE 8010-01-M

[Release No. 21238; 70-6356]

Middle South Utilities, Inc.; Proposed Issuance and Sale of Common Stock at Competitive Bidding

October 2, 1979.

Notice is hereby given that Middle South Utilities, Inc. ("Middle South"), 225 Baroone Street, New Orleans, Louisiana 70112, a registered holding company, has filed an application-declaration with this Commission pursuant to the Public Utility Holding Company Act of 1935 ("Act"), designating Sections 6(a) and 7 of the Act and Rule 50 promulgated thereunder as applicable to the following proposed transaction. All interested persons are referred to the application-declaration which is summarized below for a complete statement of the proposed transaction.

Middle South proposes to issue and sell at competitive bidding up to

7,000,000 shares of its authorized but unissued common stock, par value $5 per share, ("Additional Common Stock") to underwriters or investment bankers who will agree promptly to make a public offering thereof. Middle South estimates that the sale will result in aggregate net proceeds of approximately $105,000,000. The net proceeds from the sale of Additional Common Stock will be applied toward the repayment of the then outstanding bank loans made to Middle South, pursuant to the credit agreement between Middle South and various commercial banks dated as of June 29, 1979. The amount of such bank loans presently estimated to be outstanding at the time of sale is $166,000,000.

Middle South believes that the sale of the Additional Common Stock may require the assistance of underwriters if market conditions at the time of the offering of the securities are unfavorable. Accordingly, Middle South may amend this application-declaration to seek an exemption from the competitive bidding requirements of Rule 50 so that it may offer the Additional Common Stock through a negotiated public offering.

The fees, commissions and expenses to be incurred in connection with this transaction will be supplied by amendment. It is stated that no state or federal commission, other than this Commission, has jurisdiction over the proposed transaction.

Notice is further given that any interested person may, not later than October 29, 1979, request in writing that a hearing be held on such matter, stating the nature of his interest, the reasons for such request, and the issues of fact or law raised by said application-declaration which he desires to controvert; or he may request that he be notified if the Commission should order a hearing thereon. Any such request should be addressed: Secretary, Securities and Exchange Commission, Washington, D.C. 20549. A copy of such request should be served personally or by mail upon the applicant-declarant at the above-stated address, and proof of service (by affidavit or, in the case of an attorney at law, by certificate) should be filed with the request. At any time after said date, the application-declaration, as filed or as it may be amended, may be granted and permitted to become effective as provided in Rule 23 of the general rules and regulations under the Act, or the Commission may grant exemption from such rules as provided in Rules 20(a) and 100 thereof or take such other action as it may deem appropriate. Persons who request a hearing or advice as to whether a hearing is ordered will receive any notices and orders issued in this matter, including the date of the hearing (if ordered) and any postponements thereof.

For the Commission, by the Division of Corporate Regulation, pursuant to delegated authority.

George A. Fitzsimmons,

Secretary.

[FR Doc. 79-31274 Filed 10-9-79; 8:45 am]

BILLING CODE 8010-01-M

[Release No. 10888; 812-4353

Money Market Trust; Order Granting Exemption From Provisions

October 3, 1979.

Money Market Trust ("Applicant"), 421 Seventh Avenue, Pittsburgh, Pennsylvania 15219, registered under the Investment Company Act of 1940 ("Act") as an open-end, diversified management investment company, filed an application on July 31, 1978, and amendments thereto on August 7, 1979, and September 4, 1979, requesting an order of the Commission, pursuant to Section 6(c) of the Act, exempting Applicant from the provisions of Section 2(a)(41) of the Act and Rules 2a-4 and 22c-1 thereunder subject to conditions, to the extent necessary to permit Applicant's assets to be valued at amortized cost.

On September 11, 1979, a notice was issued (Investment Company Act Release No. 10865) of the filing of the application. The notice gave interested persons an opportunity to request a hearing and stated that an order disposing of the application would be issued as of course unless a hearing should be ordered. No request for a hearing has been filed, and the Commission has not ordered a hearing.

The matter has been considered, and it is found that the granting of the application is appropriate in the public interest and consistent with the protection of investors and the purposes fairly intended by the policy and provisions of the Act. Accordingly,

It is ordered, Pursuant to Section 6(c) of the Act, that the requested exemption from the provisions of Section 2(a)(41) of the Act and Rules 2a-4 and 22c-1 thereunder, to the extent necessary to permit Applicant's assets to be valued at amortized cost, be and hereby is granted, effective forthwith, subject to the following conditions agreed to by Applicant:

1. In supervising Applicant's operations and delegating special responsibilities involving portfolio management to Applicant's investment adviser, the trustees undertake—as a particular responsibility within the overall duty of care owed to shareholders—to establish procedures reasonably designed, taking into account current market conditions and Applicant's investment objectives, to stabilize Applicant's net asset value per share, as computed for the purpose of distribution, redemption and repurchase, at $1.00 per share.

2. Included within the procedures to be adopted by the trustees shall be the following:

(a) Review by the trustees, as they deem appropriate and at such intervals as are reasonable in light of current market conditions, to determine the extent of deviation, if any, of the net asset value per share as determined by using available market quotations from Applicant's $1.00 amortized cost price per share, and the maintenance of records of such review.[1]

(b) In the event such deviation from Applicant's $1.00 amortized cost price per share exceeds ½ of 1 percent, a requirement that the trustees will promptly consider what action, if any, should be initiated by the trustees.

(c) Where the truustees believe the extent of any deviation from Applicant's $1.00 amortized cost price per share may result in material dilution or other unfair results to investors or existing shareholders, they shall take such action as they deem appropriate to eliminate or to reduce to the extent reasonably practicable such dilution or unfair results, which may include: redemption of shares in kind; selling portfolio instruments prior to maturity to realize capital gains or losses, or to shorten the average maturity of portfolio instruments of Applicant; withholding dividends; or utilizing a net asset value per share as determined by using available market quotations.

3. Applicant will maintain a dollar-weighted average portfolio maturity appropriate to its objective of maintaining a stable net asset value per share; provided, however, that Applicant will not (a) purchase any instrument with a remaining maturity of greater than one year, or (b) maintain a

[1] To fulfill this condition, Applicant intends to use actual quotations or estimates of market value reflecting current market conditions chosen by the trustees in the exercise of their discretion to be appropriate indicators of value which may include, *inter alia,* (1) quotations or estimates of market value for individual portfolio instruments, or (2) values obtained from yield data relating to classes of money market instruments published by reputable sources.

dollar-weighted average portfolio maturity which exceeds 120 days.[2]

4. Applicant will record, maintain, and preserve permanently in an easily accessible place a written copy of the procedures (and any modifications thereto) described in paragraph 1. above, and Applicant will record, maintain preserve for a period of not less than six years (the first two years in an easily accessible place) a written record of the trustees' considerations and actions taken in connection with the discharge of their responsibilities, as set forth above, to be included in the minutes of the trustees' meetings. The documents preserved pursuant to this condition shall be subject to inspection by the Commission in accordance with Section 31(b) of the Act, as if such documents were records required to be maintained pursuant to rules adpted under Section 31(a) of the Act.

5. Applicant will limit its portfolio investments, including repurchase agreements, to those United States dollar denominated instruments which the trustees determine present minimal credit risks, and which are of "high quality" as determined by any major rating service or, in the case of any instrument that is not so rated, of comparable quality as determined by the trustees.

6. Applicant will include in each quarterly reporty, as an attachment to Form N-1Q, a statement as to whether any action pursuant to paragraph 2(c) above was taken during the preceding fiscal quarter and, if any such action was taken, will describe the nature and circumstances of such action.

For the Commission, by the Division of Investment Management, pursuant to delegated authority.

George A. Fitzsimmons,

Secretary.

[FR Doc. 79-31272 Filed 10-9-79; 8:45]

BILLING CODE 8010-01-M

[Release No. 10882; 812-4492]

Scandinavian Bank Limited; Application for an Order Declaring That Applicant Is Not an Investment Company, or, Alternatively, for an Order Exempting Applicant From All Provisions of the Act

October 1, 1979.

Notice is hereby given that Scandinavian Bank Limited ("Applicant") c/o John A. Dudley, Esq., Sullivan & Worcester, 1025 Connecticut Ave., N.W., Washington, D.C. 20036, filed an application on June 12, 1979, and amendments thereto on August 20, 1979, and September 20, 1979, for an order of the Commission pursuant to Section 3(b)(2) of the Investment Company Act of 1940 ("Act") declaring that Applicant is not an investment company, or, alternatively, for an order pursuant to Section 6(c) of the Act exempting Applicant from all provisions of the Act. All interested persons are referred to the application on filed with the Commission for a statement of the representations contained therein, which are summarized below.

Applicant states that is was incorporated in the United Kingdom in 1969 by five of the major commercial banks in the countries of Sweden, Finland, Norway and Denmark, with the approval of the Bank of England. Its capital stock is owned by the following banks, with country and precentage ownership noted: Scandinaviska Enskilda Banken (Sweden, 34.8%); Union Bank of Finland (Finland, 19.4%); Bergen Bank (Norway, 19.4%); Den Danske Bank af 1871 (Denmark, 14.5%); Den Danske Provinsbank (Denmark, 4.8%); Skanska Banken (Sweden, 3.9%); and Landsbanki Islands (Iceland, 3.2%). The application states that the Applicant was established in London, the financial center of the Eurocurrency markets, to provide an extension to domestic financing capabilities of the shareholder banks which came together in consortium to found it.

The application states that as of December 31, 1978, Applicant's total assets were approximately 1.0 billion British Pounds and total deposits were approximately 900 million British Pounds. The application also states that as of December 31, 1978, Applicant's aggregate loans, advances and acceptances were approximately 6.0 million British Pounds or approximately 57.6% of total assets.

According to the application, Applicant's primary business activities include: (1) Short and medium term finance of trade and industry; (2) arrangement and management of syndicated loans; (3) short and medium term loans to domestic and international borrowers; (4) interbank borrowing and lending in the Eurocurrency markets; and (5) export finance. Applicant also states that it is involved in rendering financial advisory services, lease financing, foreign exchange transactions, underwriting, bond trading and investment management services.

Applicant represents that it is subject to various statutes and regulations in the United Kingdom governing banks. The Bank of England, the United Kingdom's central bank, regulated Applicant and determines Applicant's capital leverage and the nature of its capital funds. Applicant must obtain prior approval from the Bank of England to increase its capital base through equity or subordinated debt. The Bank of England also regulates its foreign exchange activities and supervises its foreign currently liquidity. According to the application, the Secretary of States for Trade and Industry in the United Kingdom can order the inspection of any bank in fulfillment of the public interest or upon application from a minority of shareholders provided certain conditions are satisfied. Applicant states that it must periodically provide information on its activities to the Bank of England. In addition, Applicant represents that annually it must file audited reports and accounts, including a balance sheet and profit and loss statement with the Registrar of Companies. According to the application, neither the Bank of England nor any of Applicant's bank shareholders are direct guarantors of any obligations incurred by the Applicant.

Applicant represents that is proposes to issue and sell unsecured prime quality commercial paper notes in bearer form and denominated in United States dollars to a commercial paper dealer in the United States which will reoffer the notes in minimum denominations of $100,000 to institutional investors and other entities and individuals that normally purchase commercial paper. Applicant states that it does not intent to sell the notes in the United States in excess of an aggregate of $100,000,000 at any one time outstanding. Applicant indicates that the commercial paper notes it will issue will provide an alternative source of United States dollars to supplement dollars currently obtained in the Eurodollar market. Applicant represents that the notes will rank *pari passu* among themselves and equally with all other unsecured indebtedness and will rank superior to any subordinated obligations of Applicant, its ordinary voting shares and any other equity share capital. Applicant plans to sell the notes without registration under the Securities Act of 1933 (the "1933 Act"), in reliance upon an opinion of its American legal counsel that the offering will qualify for an exemption from the registration requirements of the 1933 Act provided for certain short-term commercial paper by Section 3(a)(3) thereof. Applicant states that it will not proceed with its

---

[2] In fulfilling this condition, if the disposition of a portfolio security results in a dollar-weighted average portfolio maturity in excess of 120 days, Applicant will invest its available cash in such a manner as to reduce the dollar-weighted average portfolio maturity to 120 days or less as soon as reasonably practicable.

proposed offering until it has received such an opinion letter. Applicant does not request Commission review of approval of such opinion letter and the Commission expresses no opinion as to the availability of any such exemption. Applicant further represents that the presently proposed issue of securities and any future issue of debt securities by the bank shall have received prior to issuance one of the three highest investment grade ratings from at least one nationally recognized statistical rating organization, and that its United States counsel shall have certified that such rating has been received. According to the application, Standard and Poors has already given Applicant's notes an A-1 rating.

Applicant states that the United States commercial paper dealer selling the notes will provide each offeree of the notes prior to purchase with a memorandum which describes Applicant's business and contains the Applicant's accounting statements. Applicant further states that the memorandum will be updated at least annually to reflect material changes in Applicant's financial status and will include the most recent publicly availabe financial statements covering the fiscal year then ended and will contain an income statement and a balance sheet which shall have been audited. Applicant indicates that the financial statements will be accompanied by a brief paragraph highlighting the differences between foreign accounting standards and generally accepted accounting principles employed by United States companies. Applicant represents that the memorandum will be at least as comprehensive as those customarily used in commercial paper offerings in the United States. Applicant consents to having any order granting the requested relief under Section 6(c) being expressly conditioned upon its compliance with the foregoing undertaking regarding disclosure memoranda. Applicant further undertakes that any future offering of its securities in the United States will be done on the basis of disclosure documents which are at least as comprehensive in their description of the Applicant as those customarily used in United States offerings of such securities. Applicant undertakes to insure that each offeree of such future securities will be provided with such disclosure documents.

Applicant represents that it will appoint a bank in the United States or the Commission as its authorized agent to accept service of process in any action based on the notes and instituted in any state or federal court by the holder of any of its notes. Applicant further represents that it will expressly accept the jurisdiction of any state or federal court in the City and State of New York with respect to any such action and that both its appointment of an authorized agent for acceptance of service of process and its consent to jurisdiction will be irrevocable until all amounts due and to become due in respect of the notes have been paid by Applicant. Applicant represents that it will similarly consent to jurisdiction and appoint an agent for service of process in suits arising from any future offerings of securities that it may make in the United States, which Applicant states may include debt securities but not its equity securities.

Section 3(a)(3) of the Act defines investment company to mean any issuer which "is engaged or proposes to engage in the business of investing, reinvesting, owning, holding, or trading in securities, and owns or proposes to acquire investment securities having a value exceeding 40 per centum of the value of such issuer's total assets (exclusive of Government securities and cash items) on an unconsolidated basis." Applicant states that it might arguably come within the definition of investment company as set forth above.

Section 3(b)(2) of the Act provides, in pertinent part, that notwithstanding the definition of investment company contained in Section 3(a)(3) of the Act, an issuer is not an investment company if the Commission, upon application by such issuer, finds and by order declares it to be primarily engaged in a business other than that of investing reinvesting, owning, holding or trading in securities.

Applicant states that it is primarily engaged in the business of commercial banking and that Applicant's receipt of any security within the meaning of the Act is merely incidental to its principal functions of arranging and providing short and medium term financing of trade, working capital and capital expenditures, arranging and managing syndicated loans and in meeting its liquidity requirements. Consequently, Applicant requests an order pursuant to Section 3(b)(2) of the Act declaring that it is not an investment company. Applicant also asserts that the type of regulation and reporting requirements to which the bank is subject in the United Kingdom demonstrates that it is primarily engaged in the business of banking.

Section 6(c) of the Act provides, in pertinent part, that the Commission, by order upon application, may conditionally or unconditionally exempt any person, security, or transaction, or any class or classes of persons, securities, or transactions, from any provision or provisions of the Act, if and to the extent that such exemption is necessary or appropriate in the public interest and consistent with the protection of investors and the purposes fairly intended by the policy and provisions of the Act.

Applicant also requests an order in the alternative pursuant to Section 6(c) of the Act exempting it from all provision of the Act. Applicant submits that as a United Kingdom bank whose capital structure and operations are closely supervised and regulated by the Bank of England, it is significantly different from the type of institution Congress intended the Act to regulate. Applicant concludes that granting an exemptive order pursuant to Section 6(c) of the Act would be necessary and appropriate in the public interest and consistent with the protection of investors and the purposes fairly intended by the policy and provisions of the Act.

Notice is further given that any interested person may, not later than October 23, 1979 at 5:30 p.m., submit to the Commission in writing a request for a hearing on the matter accompanied by a statement as to the nature of his interest, the reason for such request, and the issues, if any, of fact or law proposed to be controverted, or he may request that he be notified if the Commission shall order a hearing thereon. Any such communication should be addressed: Secretary, Securities and Exchange Commission, Washington, D.C. 20549. A copy of such request shall be served personally or by mail upon Applicant(s) at the address(es) stated above. Proof of such service (by affidavit, or in case of an attorney-at-law, by certificate) shall be filed contemporaneously with the request. As provided by Rule 0-5 of the rules and regulations promulgated under the Act, an order disposing of the application will be issued as of course following said date unless the Commission thereafter orders a hearing upon request or upon the Commission's own motion. Persons who request a hearing, or advice as to whether a hearing is ordered, will receive any notices and orders issued in this matter, including the date of the hearing (if ordered) and any postponements thereof.

For the Commission, by the Division of Investment Management, pursuant to delegated authority.

George A. Fitzsimmons,

Secretary.

[FR Doc. 79-31271 Filed 10-9-79; 8:45 am]

BILLING CODE 8010-01-M

[Release No. 10883; 812-4468]

Smith, Barney Equity Fund, Inc.; Filing of Application of the Act for an Order Exempting Certain Transactions

October 1, 1979.

Notice is hereby given that Smith, Barney Equity Fund, Inc. ("Fund"), 1345 Avenue of Americas, New York, New York 10019, a Maryland corporation registered under the Investment Company Act of 1940 ("Act") as an open-end, diversified management investment company, has filed an application on April 24, 1979, and amendments thereto on July 10, 1979, and September 21, 1979, pursuant to Section 6(c) of the Act for an order of the Commission exempting the Fund from Section 22(c) of the Act and Rule 22c-1 thereunder, to permit the issuance of Fund shares in exchange for substantially all the assets of Nassau Physicians' Fund, Inc. ("Nassau"), a Maryland corporation registered under the Act as an open-end, diversified management company, at a price based on the current net asset value of Fund shares as of the close of business on the business day preceeding the exchange, and exempting the Fund from the provisions of Section 22(d) of the Act to permit the proposed exchange of Fund shares without a sales charge. All interested persons are referred to the application on file with the Commission for a statement of the representations contained therein, which are summarized below.

The application states that on April 16, 1979, the Fund and Nassau entered into an Agreement and Plan of Reorganization ("Agreement") whereby substantially all the cash and securities of Nassau, having a market value $3,631,260 as of December 31, 1978, will be transferred to the Fund in exchange for shares of its capital stock. The Fund states that the investment objectives of the Fund and Nassau are substantially similar in seeking capital appreciation through investment in equity securities, and that there is some overlap of their respective portfolios. The Fund represents that the number of shares of the Fund to be issued to Nassau at the closing of the proposed transaction ("Closing") is to by determined by dividing the net asset value of Nassau by the net asset value per share of the Fund, both to be determined as of the close of business on the business day preceding the Closing. The application states that the respective net asset values of the Fund and Nassau will be adjusted according to a method set forth in the Agreement which takes into consideration assumptions concerning the shareholders' average incremental tax rate, the average holding period of shareholders and the shareholders' average potential rate of return on investments, if Nassau's (or the Fund's) net assets include net realized and unrealized gains or losses.

The Fund represents that no affiliation exists between Nassau or its officers or directors and the Fund or its officers and directors. It is asserted that the Agreement was negotiated at arm's length by the Fund and Nassau. The application states that the two companies began discussions leading to the Agreement after Nassau's investment adviser was acquired by a commercial bank and was unable under the federal banking laws to continue as Nassau's investment adviser. No intermediary was involved in bringing Nassau and the Fund together, and no fee was paid to any such intermediary.

Rule 22c-1, adopted pursuant to Section 22(c) of the Act, provides in pertinent part, that redeemable securities of registerd investment companies must be sold, redeemed, or repurchased at a price based on the current net asset value (computed on each day during which the New York Stock Exchange is open for trading not less frequently than once daily as of the time of the close of trading on such Exchange) which is next computed after receipt of a tender of such security for redemption or of an order to purchase or sell such security.

Under the Agreement, the number of Fund Shares to be exchanged for the assets of Nassau will be determined as of the close of business on the business day preceding the Closing, and the issuance by the Fund of shares of its capital stock in the exchange may not be in compliance with Rule 22c-1. The Fund submits that the timing of the determination of the number of shares to be exchanged is appropriate under the circumstances because it will allow the Fund and Nassau adequate time to prepare for the Closing with respect to the transaction. The Fund does not believe that computation of the number of shares to be exchanged on the business day preceding the Closing will give rise to the type of speculative activity which Rule 22c-1 was designed to prohibit.

Section 22(d) of the Act provides, in pertinent part, that a registered open-end investment company may sell its shares only at a current public offering price described in the prospectus. The application states that since shares of the Fund's capital stock will be issued for purposes of the exchange without the imposition of the sales charge provided in the Fund's prospectus, an order of exemption from Section 22(d) of the Act is necessary if the proposed transaction is to comply with the Act. The Fund submits that the non-payment of any sales charge for purposes of the exchange will be beneficial to the Fund's stockholders for the following reasons: (1) Those expenses of the Fund which do not rise proportionately with an increase in portfolio size will be spread over a larger number of shares, and there will be, therefore, a smaller amount of expenses per share for existing stockholders; (2) the proposed exchange of shares will enable the Fund to acquire additional securities for its portfolio without affecting the market in such securities; and (3) the Fund will be able to effect such acquisition at a savings in brokerage commissions that would have been payable had the same number of shares been purchased for cash. Despite offsetting transaction costs involved in the disposition of securities which the Fund does not expect to retain for any significant period after completion of the proposed exchange of shares, the transfer of portfolio securities will cause the Fund less expense than the purchase of securities of the same issuers in the open market. The Fund currently plans to sell 21.9% of the Nassau assets to be acquired in the exchange, consisting of the securities of eight companies. The Fund states that these sales will be made because of the Fund's assessment of the quality of such securities and not because they come within any particular category of investment. Furthermore, prior to becoming stockholders of the Fund, Nassau stockholders will approve a plan of reorganization and will receive a proxy statement which will explain in great detail the operations, the investment objectives, and the policies of the Fund and of its investment adviser, Smith, Barney Advisers, Inc. The selling effort to familiarize such stockholders with the operations, the investment objectives and the policies of the Fund and its investment adviser will take place in the context of the proxy solicitation and not through salesmen whose services are not required to introduce such persons to the Fund.

It is further represented that the granting of the requested exemption from Sections 22(c) and 22(d) of the Act and Rule 22c-1 thereunder is appropriate in the public interest and consistent with the protection of investors and the purposes fairly intended by the policy and provisions of the Act.

Section 6(c) of the Act provides, in pertinent part, that the Commission, by order upon application, may conditionally or unconditionally exempt any person or transaction from any provision under the Act or any rule or regulation thereunder, if and to the extent such exemption is necessary or appropriate in the public interest and consistent with the protection of investors and the purposes fairly intended by the policy and provisions of the Act.

Notice is further given that any interested person may, not later than October 23, 1979 at 5:30 p.m., submit to the Commission in writing a request for a hearing on the matter accompanied by a statement as to the nature of his interest, the reason for such request, and the issues, if any, of fact or law proposed to be controverted, or he may request that he be notified if the Commission shall order a hearing thereon. Any such communication should be addressed: Secretary, Securities and Exchange Commission, Washington, D.C. 20549. A copy of such request shall be served personally or by mail upon Applicant(s) at the address(es) stated above. Proof of such service (by affidavit, or in case of an attorney-at-law, by certificate) shall be filed contemporaneously with the request. As provided by Rule 0-5 of the rules and regulations promulgated under the Act, an order disposing of the application will be issued as of course following said date unless the Commission thereafter orders a hearing upon request or upon the Commission's own motion. Persons who request a hearing, or advice as to whether a hearing is ordered, will receive any notices and orders issued in this matter, including the date of the hearing (if ordered) and any postponements thereof.

For the Commission, by the Division or Investment Management, pursuant to delegated authority.

George A Fitzsimmons,

Secretary.

[FR Doc. 79-31265 Filed 10-9-79; 8:45 am]

BILLING CODE 8010-01-M

[File No. 81-562]

Welltech, Inc.; Application and Opportunity for Hearing

September 27, 1979.

Notice is hereby given that Welltech, Inc. ("Applicant") has filed an application pursuant to Section 12(h) of the Securities Exchange Act of 1934, as amended (the "1934 Act") for an order exempting Applicant from the provisions of Sections 13 and 15(d) of that Act.

The Applicant states, in part:

(1) On June 6, 1979, B-H Interim Corp., the shares of which are owned fifty percent by Bechtel Wells Corporation and fifty percent by Hanna Services Company, was merged with and into the Applicant pursuant to Section 253 of the Delaware General Corporation Law. The Applicant was the surviving corporation.

(2) All shares of the Applicant held by persons other than B-H Interim Corp. were converted into a right to receive $39.00 per share in cash or to pursue statutory appraisal rights.

(3) Prior to the merger, all shareholders of the Applicant were provided with a notice of the merger and information statement as well as reports filed under the 1934 Act.

(4) All shares of the Applicant are presently held by Bechtel Wells Corporation and Hanna Services Company.

In the absence of an exemption, Applicant would be required to file a report on Form 10-K for the period ended December 31, 1979, reports on Form 10-Q for the periods ending June 30, 1979 and September 30, 1979, and current reports on Form 8-K. Applicant believes that it is no longer in the public interest or necessary for the protection of investors to require it to continue to file the reports required by Sections 13 and 15(d) of the 1934 Act inasmuch as there is no trading in the Applicant's securities, the Applicant has only two shareholders, and the expense and time required to prepare the reports is disproportinate to their value to the public.

For a more detailed statement of the information presented, all persons are referred to the application which is on file in the offices of the Commission at 1100 L St., NW., Washington, D.C. 20549.

Notice is further given that any interested person, not later than October 22, 1979, may submit to the Commission in writing his views or any substantial facts bearing on this application or the desirability of a hearing thereon. Any such communication or request should be addressed to Secretary, Securities and Exchange Commission, 500 North Capitol Street, NW., Washington, D.C. 20549, and should state briefly the nature of the interest of the person submitting such information or requesting the hearing, the reason for such request, and the issues of fact and law raised by the application which he desired to controvert. Persons who request a hearing or advice as to whether a hearing is ordered will receive any notices and orders issued in this matter, including the date of the hearing (if ordered) and any postponements thereof. At any time after said date, an order granting the application may be issued upon request or upon the Commission's own motion.

For the Commission, by the Division of Corporation Finance, pursuant to delegated authority.

George A. Fitzsimmons,

Secretary.

[FR Doc. 79-31266 Filed 10-9-79; 8:45 am]

BILLING CODE 8010-01-M

[Release No. 21237; 70-6346]

Allegheny Power System, Inc.; Notice of Proposal by Holding Company To Become Bonded as Surety of Public Utility Subsidiary Company

October 2, 1979.

Notice is hereby given that Allegheny Power System, Inc. ("Allegheny"), 320 Park Avenue, New York, New York 10022, a registered holding company, has filed a declaration with this Commission pursuant to the Public Utility Holding Company Act of 1935 ("Act"), designating sections 12(b) and 12(f) of the Act as applicable to the following proposed transaction. All interested persons are referred to the declaration, which is summarized below, for a complete statement of the proposed transaction.

Allegheny proposes to become bonded as surety to the State of West Virginia in such amount as shall be determined by the West Virginia Public Service Commission ("WVPSC") for prompt refund by Allegheny's wholly owned subsidiary, The Potomac Edison Company ("Potomac"), of all amounts Potomac, under certain tariffs filed with the WVPSC on June 29, 1979, may collect or receive in excess of such rates and charges as may be finally fixed by the WVPSC, plus interest at such annual rate as the WVPSC may determine by order to be necessary and appropriate. The purpose of the proposed transaction is to enable Potomac, as permitted by West Virginia law, to begin applying the new increased rates prior to completion of the WVPSC's investigation, hearing

and decision with respect thereto. It is expected that the amount of the bond will not exceed $14,700,000, which is the estimated additional annual revenue that the new rates will provide. In the event the amount of the bond ordered by the WVPSC should exceed that amount, Allegheny will not execute the same until it has filed a post-effective amendment hereto, and the Commission has issued a further order with respect thereto.

The fees and expenses incurred by Allegheny in connection with the proposed transaction are estimated at $2,200, including legal fees of $200. The declaration states that no state commission and no federal commission, other than this Commission has jurisdiction over the proposed transaction.

Notice is further given that any interested person may, not later than November 1, 1979, request in writing that a hearing be held on such matter, stating the nature of his interest, the reasons for such request, and the issues of fact or law raised by the filing which he desires to controvert; or he may request that he be notified if the Commission should order a hearing thereon. Any such request should be addressed: Secretary, Securities and Exchange Commission, Washington, D.C. 20549. A copy of such request should be served personally or by mail upon the declarants at the above-stated address, and proof of service (by affidavit or, in case of an attorney at law, by certificate) should be filed with the request. At any time after said date, the declaration, as filed, or as it may be amended, may be granted as provided in Rule 23 of the General Rules and Regulations promulgated under the Act, or the Commission may grant exemption from such rules provided in Rules 20(a) and 100 thereof or take such other action as it may deem appropriate. Persons who request a hearing or advice as to whether a hearing is ordered will receive any notices or orders issued in this matter, including the date of the hearing (if ordered) and any postponements thereof.

For the Commission, by the Division of Corporate Regulation, pursuant to delegated authority.

George A. Fitzsimmons,

Secretary.

[FR Doc. 79-31164 Filed 10-9-79; 8:45 am]

BILLING CODE 8010-01-M

[File No. 81-576]

Combined Communications Corporation; Notice of Application and Opportunity for Hearing

September 27, 1979

Notice if hereby given that Combined Communications Corporation, (the "Applicant"), has filed an Application pursuant to section 12(h) of the Securities Exchange Act of 1934, as amended (the "Exchange Act") seeking an exemption from the reporting requirements of sections 13 and 15(d) of the Exchange Act.

The Application states in part:

1. The Applicant was a publicly-held company with a class of securities registered pursuant to section 12(b) of the Exchange Act.

2. Effective June 7, 1979, a wholly-owned subsidiary of Gannett Co., Inc. ("Gannett") was merged into the Applicant with the result that Gannett is now the only shareholder of the Applicant.

3. The Applicant's financial reports are now prepared on a consolidated basis with Gannett.

4. In the absence of an exemption, the Applicant will be required to file certain periodic and other reports for the period ending December 31, 1979, including its report on Form 10-Q for the quarter ended June 30, 1979, pursuant to section 15(d) of the Exchange Act.

The Applicant contends that it would be unreasonably burdensome and unnecessary for the protection of investors to continue to require separate reports to be filed by the Applicant.

For a more detailed statement of the information presented, all persons are referred to said application which is on file in the Offices of the Commission at 1100 L Street, NW., Washington, D.C. 20549.

Notice is further given that any interested person not later than October 22, 1979 may submit to the Commission in writing his views of any substantial facts bearing on the application or the desirability of a hearing thereon. Any such communication or request should be addressed: Secretary, Securities and Exchange Commission, 500 North Capitol Street, NW., Washington, D.C. 20549, and should state briefly the nature of the interest of the person submitting such information or requesting the hearing, the reason for such request, and the issues of fact and law raised by the application which he desires to controvert.

Persons who request a hearing or advice as to whether a hearing is ordered will receive any notices and orders issued in this matter, including the date of the hearing (if ordered) and any postponements thereof. At any time after said date, an order granting the application may be issued upon request or upon the Commission's own motion.

For the Commission, by the Division of Corporation Finance, pursuant to delegated authority.

George A. Fitzsimmons,

Secretary.

[FR Doc. 79-31170 Filed 10-9-79; 8:45 am]

BILLING CODE 8010-01-M

[Release No. 21232; 70-6300]

Consolidated Natural Gas Co., et al.; Post-Effective Amendment Regarding Proposed Issuance and Sale of Commercial Paper and Notes to Bank by Holding Company and Open Account Advances to Subsidiaries

September 28, 1979.

In the matter of Consolidated Natural Gas Company, 30 Rockefeller Plaza, New York, New York 10020; CNG Coal Company, CNG Development Company Ltd., CNG Producing Company, CNG Research Company, Consolidated Gas Supply Corporation, Consolidated Natural Gas Service Company, Inc., Consolidated System LNG Company, The East Ohio Gas Company, The Peoples Natural Gas Company, The River Gas Company, West Ohio Gas Company.

Notice is hereby given that Consolidated Natural Gas Company ("Consolidated"), a registered holding company, and certain of its subsidiary companies, CNG Coal Company, CNG Development Company Ltd., CNG Producing Company, CNG Research Company, Consolidated Gas Supply Corporation, Consolidated Natural Gas Service Company, Inc., Consolidated System LNG Company, The East Ohio Gas Company, The Peoples Natural Gas Company, The River Gas Company, and West Ohio Gas Company have filed with this Commission a further post-effective amendment to the application-declaration in this proceeding pursuant to setions 6(b) and 12(b) of the Public Utility Holding Company Act of 1935 ("Act") and Rules 45 and 50(a)(5) promulgated thereunder regarding the following proposed transactions. All interested persons are referred to the amended application-declaration, which is summarized below, for a complete statement of the proposed transactions.

By orders in this proceeding dated July 2, 1979 and August 23, 1979, (HCAR Nos. 21129 and 21044), Consolidated and its subsidiary companies were authorized to engage in certain intrasystem financing and Consolidated

was authorized to issue and sell commercial paper and notes to banks. It is now proposed (1) that Consolidated's commercial paper be increased from $50,000,000 to $100,000,000, (2) that Consolidated's back-up bank borrowings be increased from $50,000,000 to $100,000,000, and (3) that open account advances to subsidiary companies be doubled to an aggregate of $150,000,000, but not exceeding $100,000,000 at any one time. The filing states that recent supplier price increases, together with revised timing schedules for placing system pipeline and distribution companies' purchased gas adjustment clauses, which track these increases, into effect, have resulted in a substantial cash collection lag. Additional borrowings are thus needed to meet working capitol requirements of certain subsidiary companies.

The proposed commercial paper will be issued and sold to a dealer in commercial paper, in an aggregate principal amount not to exceed $100,000,000 outstanding at any one time, from time to time, up to May 31, 1980. Such commercial paper will have varying maturities of not more than 270 days after date of issue and will be issued and sold in varying denominations of not less than $50,000 and not more than $5,000,000 directly to the dealer, at a discount which will not be in excess of the discount rate per annum prevailing at the date of issuance for commercial paper of comparable quality and like maturities. No commission or fee will be payable in connection with the issue and sale of such commercial paper notes. The dealer, as principal, will reoffer such notes at a discount not to exceed one-eighth of one per cent per annum less than the prevailing discount rate to Consolidated to not more than 200 identified and designated customers in a nonpublic list prepared in advance by the dealer. It is anticipated that the commercial paper will be held by customers to maturity; however, if any commercial paper is repurchased by the dealer pursuant to a verbal repurchase agreement, such paper will be reoffered only to others in the group of 200 customers. Consolidated intends to sell commercial paper only so long as the discount rate or the effective interest cost on the date of sale does not exceed the equivalent cost of borrowings from a commercial bank.

In the order of July 2, 1979, Consolidated was authorized to issue and sell $50,000,000 of notes to The Chase Manhattan Bank, N.A. as a back-up for the commercial paper. In addition, Consolidated now proposes, to the extent that it becomes impractical to issue the aforesaid commercial paper due to market conditions or otherwise, to borrow, repay, and reborrow from Citibank, N.A., from time to time up to May 31, 1980, an aggregate principal amount not to exceed $50,000,000 outstanding at any one time, without collateral, at the base rate of interest of said bank in effect on the date of each borrowing. The notes will have a maturity date not more than 90 days from the date of each borrowing, with the right of prepayment in whole or in part at any time or from time to time without prior notice and without premium. There will be no closing or related charges with respect to the obtaining of such bank loan, except, however, Consolidated shall pay a commitment fee of one-half of one percent (.5 percent) on such principal amount.

Finally, it is now proposed that Consolidated make, from time to time up to May 31, 1980, open account advances aggregating up to $150,000,000 to the subsidiary companies to provide necessary flexibility for their day-to-day working capital requirements. However, these advances should not exceed $100,000,000 at any one time. Such advances may be made, repaid, and remade as requested by the treasurer of each subsidiary company, upon letter agreement by each subsidiary company that such open account advances will be repaid on or before a date not more than one year from the date of the first advance to such subsidiary company with interest at substantially the same effective rate of interest as the related commercial paper or bank borrowings by Consolidated. The advances will be made up to the following principal amounts:

CNG Producing Company	$17,500,000
Consolidated Gas Supply Corporation	55,000,000
Consolidated System LNG Company	30,000,000
The East Ohio Gas Company	30,000,000
The Peoples Natural Gas Company	16,000,000
The River Gas Company	500,000
West Ohio Gas Company	1,000,000
Total	140,000,000

Consolidated requests that, for the period ending May 31, 1980, an exemption be allowed from the provisions of section 6(a) of the Act pursuant to the first sentence of section 6(b), relating to the issuance and sale of short-term notes, by increasing the 5 percent limitation on such notes to a maximum of 12 percent in order to permit Consolidated to have outstanding at any one time up to $100,000,000 principal amount of short-term notes during such period.

Consolidated requests exception from the competitive bidding requirements of Rule 50 with respect to the sale of commercial paper on the grounds that such commercial paper will have maturities of nine months or less, that current rates for commercial paper for prime borrowers, such as Consolidated, are published daily in financial publications, and that it is not practical to invite competitive bids for commercial paper. Consolidated also proposes that the Rule 24 certificates of notification regarding the proposed transactions be filed on a quarterly basis.

The post-effective amendment states that the Public Service Commission of West Virginia has jurisdiction over the proposed short-term borrowings of Consolidated Gas Supply Corporation and that no other state or federal commission, other than this Commission, has jurisdiction over the proposed transactions. The fees and expenses to be incurred in connection with the proposed transactions are estimated not to exceed $1,500 and are to be paid by consolidated.

Notice is further given that any interested person may, not later than October 26, 1979, request in writing that a hearing be held in respect of such matter, stating the nature of his interest, the reasons for such request, and the issues of fact or law raised by said post-effective amendment to the application-declaration which he desires to controvert; or he may request that he be notified should the Commission order a hearing thereon. Any such request should be addressed: Secretary, Securities and Exchange Commission, Washington, D.C. 20549. A copy of such request should be served personally or by mail upon the applicants-declarants at the above-stated address, and proof of service (by affidavit or, in case of an attorney at law, by certificate) should be filed with the request. At any time after said date, the application-declaration, as now amended or as it may be further amended, may be granted and permitted to become effective as provided in Rule 23 of the General Rules and Regulations promulgated under the Act, or the Commission may grant exemption from such rules as provided in Rules 20(a) and 100 thereof or take such other action as it may deem appropriate. Persons who request a hearing or advice as to whether a hearing is ordered will receive any notices and orders issued in this matter, including the date of the hearing (if ordered) and any postponements thereof.

For the Commission, by the Division of Corporate Regulation, pursuant to delegated authority.

George A. Fitzsimmons,

Secretary.

[FR Doc. 79-31168 Filed 10-9-79; 8:45 am]

BILLING CODE 8010-01-M

[File No. 81-582]

F-B Truck Line Co.; Notice of Application and Opportunity for Hearing

September 27, 1979.

Notice is hereby given that F-B Truck Line Company ("Applicant") has filed an application pursuant to Section 12(h) of the Securities Exchange Act of 1934, as amended, (the "1934 Act") for an order exempting Applicant from the provisions of section 15(d) of that Act.

The Application states, in part:

1. On July 6, 1979, Applicant became a wholly-owned subsidiary of Eagle Motor Lines, Inc. As a result of the merger, Applicant no longer has any public stockholders.

2. On August 6, 1979, Applicant's registration under section 12(g) of the 1934 Act was terminated.

In the absence of an exemption, Applicant would be required to file periodic reports for the year ending December 31, 1979. Applicant believes that its request for an order exempting it from the reporting provisions of section 15(d) of the 1934 Act is appropriate inasmuch as it is now a wholly-owned subsidiary and has no publicly held common stock.

For a more detailed statement of the information presented, all persons are referred to the application which is on file in the offices of the Commission at 1100 L St., NW., Washington, D.C. 20549.

Notice is further given that any interested person, not later than October 22, 1979, may submit to the Commission in writing his views or any substantial facts bearing on this application or the desirability of a hearing thereon. Any such communication or request should be addressed to Secretary, Securities and Exchange Commission, 500 North Capitol Street, NW., Washington, D.C. 20549, and should state briefly the nature of the interest of the person submitting such information or requesting the hearing, the reason for such request, and the issues of fact and law raised by the application which he desires to controvert. Persons who request a hearing or advice as to whether a hearing is ordered will receive any notices and orders issued in this matter, including the date of the hearing (if ordered) and any postponements thereof. At any time after said date, an order granting the application may be issued upon request or upon the Commission's own motion.

For the Commission, by the Division of Corporation Finance, pursuant to delegated authority.

George A. Fitzsimmons,

Secretary.

[FR Doc. 79-31171 Filed 10-9-79; 8:45 am]

BILLING CODE 8010-01-M

[Release No. 10885; 812-4546]

Fundpack, Inc.; Notice of Filing of Application and Order Pursuant to Section 6(c) of the Act Granting Temporary Exemption From Section 16(a) of the Act

October 2, 1979.

In the Matter of the Fundpack, Inc., Holding Trust and Holdings of U.S. Government Securities, Inc., 3200 Ponce de Leon Boulevard, Coral Gables, Florida 33134.

Notice is hereby given that The Fundpack, Inc. ("Fundpack"), Holding Trust ("Trust"), Holdings of U.S. Government Securities, Inc. ("Securities"), (hereinafter Fundpack, Trust and Securities are collectively referred to as "Applicants") filed an application on October 2, 1979, for an order of the Commission pursuant to section 6(c) of the Investment Company Act of 1940 ("Act") to exempt Applicants from certain provisions of section 16(a) of the Act to permit, pursuant to a court order, independent directors to serve on the boards of directors of Applicants ("Boards") until the earlier of March 31, 1980 or such time as the shareholders of each Applicant elect a new board of directors. All interested persons are referred to the application on file with the Commission for a statement of the respresentations contained therein which are summarized below.

Applicants state that Fundpack, a Florida corporation, invests primarily in shares of other investment companies. Holding Trust, a Massachusetts business trust, invests in money market instruments of six months maturity or less. Securities, a Florida corporation, invests in marketable debt securities issued by or guaranteed by the United States Government, or by agencies or instrumentalities of the United States. The Funds are registered under the Act as open-end, diversified management investment companies.

On March 21, 1979, the Commission filed in the United States District Court of the District of Columbia ("Court") a complaint in an action entitled *Securities and Exchange Commission* v. *The Fundpack, Inc. et al.* The Funds were named as defendants in that complaint which alleged violations of the Securities Act of 1933, the Securities Exchange Act of 1934, the Investment Advisers Act of 1940 and Sections of the Act. The Commission's complaint for injunctive and other equitable relief seeks, among other things, to permanently enjoin the directors of each Fund from serving or acting as directors, investment advisers, principal underwriters or in various other capacities for any registered investment company. Subsequent to the filing of the complaint, the Commission filed motions requesting that the Court 1) require the Applicants to disclose to their shareholders the impact of the investment switching program promoted by the Applicant on each Applicant's net asset value, 2) void the proxies used in the last election of directors for each Applicant and 3) appoint a receiver to manage the Applicants. On August 10, 1979, the Court entered an order voiding the proxies used in the last election of directors by the Applicants, ordering the resolicitation of proxies and appointing an independent master ("Master") to oversee and approve proxy solicitation, filings with the Commission and communications with shareholders subject to the Court's supervision.

Applicants state that without admitting or denying the substantive allegations contained in the complaint of the Commission, they have agreed to the entry against them of a final judgment of permanent injunction and other equitable relief ("Final Judgment"). Applicant's Consent and Undertaking ("Consent"), which is incorporated in the Final Judgment provides that:

1. within five days after the entry of the Final Order four independent directors will be appointed to the Board of each Applicant;

2. each Applicant shall hold a shareholder meeting within six months of the entry of the Final Order ("Meeting") to nominate and recommend to shareholders the election of independent directors to serve for at least on year following the Meeting;

3. within five days of the entry of the Final Order each Applicant shall retain the Master as special counsel ("Counsel") to supervise and monitor certain activities of the Applicants until the Court orders otherwise;

4. during the tenure of the independent directors appointed under the Final Order at least 80% of persons serving on the Boards must be persons satisfactory to the Commission;

5. prior to the Meeting, the directors of each Applicant shall consider and make recommendations, with the advice of

Counsel on the future disposition or management of Applicant;

6. within twenty days of the entry of the Final Order Applicants shall mail to their shareholders a complete written description of the Commission's complaint and related litigation which Counsel and the Commission have reviewed and approved;

7. fees and reasonable expenses of Counsel will be paid by Fundpack Management, Inc. ("Management"), the former adviser of Applicants subject to certain conditions;

8. management shall make disbursement of its income or assets only as specified in the Final Order; and

9. the Court will retain jurisdiction over Applicants to assure that the terms of the Final Order are carried out and that shareholder interests are protected.

In order to comply with the terms of the Consent, Applicants requests, pursuant to section 6(c) of the Act, an immediate interim exemption from section 16(a) of the Act. Applicants state that an exemption from section 16(a) is necessary for the Applicants to comply with the terms of the Final Order permitting the appointment of independent directors to their respective Boards for the lesser of six months from the day the Final Order is entered or until the election of new directors by shareholders as provided for in the consent.

Section 16(a) of the Act in part provides that except for the filling of certain vacancies on a board of directors, no person can serve as a director of an investment company unless elected by shareholders. In the event that less than a majority of directors were elected by shareholders, Section 16(a) requires that a special shareholder meeting must be held within sixty days for the purpose of electing directors to fill any existing vacancies in the board unless the Commission shall, by order, extend such period.

Applicants contend that an order of the Commission pursuant to section 6(c) of the Act, granting the requested temporary exemption, is necessary and appropriate in the public interest and is consistent with the protection of investors and the purposes fairly intended by the policy and provisions of the Act. Applicants state that the appointment of independent directors as soon as possiblie is necessary to protect shareholder interests. Applicants state that because the Court will order the independent directors to serve on the Boards of the Applicants within five days of the Final Order being entered, there will be no opportunity for Applicants to hold a shareholder meeting at which such directors could be elected before they commence to serve. Applicants point out that in order for them to avoid violating section 16(a) of the Act the exemption must be granted simultaneously with the Court's entry of the Final Order.

Applicants further contend that holding a special shareholder meeting would be unjustifiably burdensome and expensive since the independent directors will serve only until a shareholder meeting is held for the purpose of electing a new Board for each Applicant as required by the Consent. Applicants contend that the interests of Applicants' shareholders are not jeopardized nor is there substantive harm to the public interest if the exemption is granted since the terms of the exemption and the conditions necessitating the exemption have been approved by the Court as well as the Commission and the independent directors serving prior to the shareholder meeting must be persons acceptable to the Commission. Applicants state that should any vacancies occur on the Boards after the initial appointment of independent directors but prior to the shareholder meeting called for in the Consent, the same reasons compel that the Applicants be exempted from the necessity of electing persons to fill such vacancies. Applicants represent that no public policy would be served by denying the exemption sought.

Section 6(c) of the Act provides in part that the Commission by order upon application may conditionally or unconditionally exempt any person or transaction from any provision or provisions of the Act if and to the extent that such exemption is necessary or appropriate in the public interest and consistent with the protection of investors and the purposes fairly intended by the policy and provisions of the Act.

The matter has been considered by the Commission, and it is found that, in view of the circumstances set forth above, particularly given the Court's entry of the Final Order, the concurrence of the Court and the Commission to the terms of the Consent, the temporary nature of the exemption sought and the necessity of acting immediately to protect shareholder interests, the granting of an immediate interim order exempting Applicants from Section 16(a) of the Act to permit the independent directors to serve on the Board of each Applicant pursuant to the Final Order until the earlier of March 31, 1980 or such time as the shareholders of each Applicant elects a new Board is appropriate in the public interest and consistent with the protection of investors and the purposes fairly intended by the policy and provisions of the Act.

Accordingly, it is ordered, pursuant to section 6(c) of the Act, that the application for a temporary order exempting the Fundpack, Inc., Holding Trust and Holdings of U.S. Government Securities, Inc. from section 16(a) of the Act to premit, pursuant to court order, independent directors to serve on the respective boards of directors of such investment companies, be and hereby is granted until the earlier of March 31, 1980 or such time as the shareholders of The Fundpack, Inc., Holding Trust and Holdings of U.S. Government Securities, Inc. elect new boards of directors.

By the Commission.

George A. Fitzsimmons,

Secretary.

[FR Doc. 79-31167 Filed 10-9-79; 8:45 am]

BILLING CODE 8010-01-M

[File No. 81-533]

Indiana Group, Inc.; Notice of Application and Opportunity for Hearing

September 27, 1979.

Notice is hereby given that Indiana Group, Inc. ("Applicant") has filed an application pursuant to section 12(h) of the Securities Exchange Act of 1934, as amended (the "1934 Act"), seeking an exemption from the requirement to file reports pursuant to Section 15(d) of the 1934 Act.

The Applicant states in part:

Pursuant to an Agreement of Merger dated as of April 23, 1979 (the "Merger Agreement") between ND Corporation ("ND"), a wholly-owned subsidiary of National Distillers and Chemical Corporation ("National"), and Indiana Group, Inc. ("Indiana"), ND merged with and into Indiana (the "Merger"). As a result of the Merger, the separate corporate existence of ND terminated and Indiana became a wholly-owned subsidiary of National.

Prior to the Merger, Indiana was a publicly-held corporation. Its common shares, par value $.83⅓ per share, were traded over the counter and registered under section 12(g) of the Exchange Act.

Applicant's Agruments for Granting the Requested Exemption

Applicant submits that an order of the Commission pursuant to section 12(h) of the 1934 Act exempting it from the reporting requirements of section 15(d) of that Act would be in consonance with the purposes of that Act and the public interest for the following reasons:

1) Applicant's stock is no longer traded, Applicant being a wholly-owned subsidiary of National.

2) National is a publicly owned and traded company which makes periodic filings with this Commission, and with the New York Stock Exchange.

Indiana is now operating as a Subsidiary of National. National does not prepare, as a matter of course, separate financial statements meeting the requirements of Form 10–Q or Form 10–K for its subsidiaries. Unless Indiana is exempted from the provisions of section 15(d) of the Exchange Act, it will be necessary to file such reports at least through the close of Indiana's fiscal year on December 31, 1979. Such an exercise would be wastefully complex and expensive under these circumstances. In addition, it seems clear that no purpose would be served by requiring the filing of the reports required by section 13 or 16 of the Exchange Act with respect to a compamy whose common shares are no longer publicly held.

The Applicant contends that no useful purpose would be served in filing the required periodic reports because there are no longer public investors or trading interest in its securities.

For a more detailed statement of the information presented, all persons are referred to said application which is on file in the Office of the Commission at 1100 L Street NW., Washington, D.C. 20549.

Notice is further given that any interested person not later than October 22, 1979 may submit to the Commission in writing his views on any substantial facts bearing on the application or the desirability of a hearing thereon. Any such communication or request should be addressed: Secretary, Securities and Exchange Commission, 500 North Capitol Street NW., Washington, D.C. 20549, and should state briefly the nature of the interest of the person submitting such information or requesting the hearing, the reason for such request, and the issues of fact and law raised by the application which he desires to controvert.

Persons who request a hearing or advice as to whether a hearing is ordered will recive any notices and orders issued in this matter, including the date of the hearing (if ordered) and any postponements thereof. At any time after said date, an order granting the application may be issued upon request or upon the Commission's own motion.

For the Commission, by the Division of Corporation Finance, pursuant to delegated authority.

George A. Fitzsimmons,

Secretary.

[FR Doc. 79-31163 Filed 10-9-79; 8:45 am]

BILLING CODE 8010-01-M

[Release No. 10884; 812-4500]

IPI-Income and Price Index Fund and The Boston Company Income Securities Advisors, Inc.; Notice of Filing of Application Pursuant to Section 6(c) of the Act For Order of Exemption From Section 2(a)(19) of the Act.

October 1, 1979.

Notice is hereby given that IPI-Income and Price Index Fund ("Fund"), registered under the Investment Company Act of 1940 (the "Act") as an open-end, non-diversified, management investment company, and The Boston Company Income Securities Advisors, Inc. ("Boston" or the "Adviser"), One Boston Place, Boston, Massachusetts 02106, the Fund's investment adviser (hereinafter the Fund and the Adviser are collectively referred to as "Applicants"), filed an application on July 5, 1979, and an amendment thereto on September 20, 1979, requesting an order of the Commission pursuant to section 6(c) of the Act exempting the Fund and its general partners from the provisions of section 2(a)(19) of the Act to the extent that the Fund's general partners would otherwise be deemed to be "interested persons" of the Fund or its Non-Managing General Partner solely because they are partners in the Fund. All interested persons are referred to the application on file with the Commission for a statement of the representations contained therein, which are summarized below.

Applicants state that the Fund has been organized as a limited partnership under the Uniform Limited Partnership Act of California and proposes to operate as an open, non-diversified, management investment company registered under the Act, with the objective of providing investors with a high level of current income and additional return primarily in the form of long-term capital gains. They further state that the Fund will seek to achieve this objective by investing in a managed portfolio of investment grade bonds (bonds in the four highest grades assigned by Moody's Investors Service, Inc. or Standard and Poor's Corporation) and money market instruments, and by acquiring a diversified portfolio of commodity futures contracts ("investment securities"). According to the application, the Fund has received a ruling from the Internal Revenue Service that the Fund will be classified as a partnership for federal income tax purposes and not as an association taxable as a corporation.

The Fund will purchase a diversified portfolio of commodity futures contracts. The Applicants state that the portfolio will contain a selected group of commodity futures contracts which in the opinion of the management of the Fund offers sufficient liquidity and which is representative of commodities contained in the Wholesale Price Index (renamed the Producer Price Index) published by the Bureau of Labor Statistics. The Applicants further state that the Fund, absent unusual market conditions, will use not more than 5 percent of its net assets as margin deposits on commodity futures contracts. The Applicants represent that in no event will more than 10 percent of the net assets of the Fund be utilized as margin deposits for commodity futures contracts. The Applicants state that to the extent possible the Fund will utilize money market instruments for any margin deposits which it may make with respect to commodity futures contracts. The Applicants further represent that the Fund's net assets plus borrowing by the Fund and the aggregate price of all commodity futures contracts owned by the Fund will equal at least 300 percent of the aggregate price of all commodity futures contracts owned by the Fund and any borrowing, and that if the net assets of the Fund all below the 300 percent requirement the Fund will take the necessary steps to restore the 300 percent coverage within three business days.

The general partners of the Fund will consist of Managing General Partners (which prior to the public offering of the Fund's shares will consist of at least five persons) and one or more Non-Managing General Partners; the Fund will be managed solely by the Managing General Partners, except in the circumstances described below. Only individuals may serve as Managing General Partners. They will perform the same functions as directors of incorporated investment companies. Applicants state that as the Fund's Non-Managing General Partner, Boston Company Income Securities Advisors, Inc., the investment adviser to the Fund, will be excluded from participation in the management of the Fund, except in the circumstances described below. In its capacity as investment adviser, however, Boston may also have the authority to act on behalf of the Fund to

the extent provided in its advisory agreement.

According to the application, the Managing General Partners may act only by a majority vote at a meeting or (except for action on the Fund's investment advisory agreement) by a unanimous written or telephonic consent without a meeting, and are subject to election and removal by vote of the limited partners. The application states that a Managing General Partner may resign by giving not less than 90 days written notice to the other Managing General Partners. If at any time the number of Managing General Partners is reduced to less than three, the remaining Managing General Partners shall within 120 days call a meeting of the limited partners for the purpose of electing an additional Managing General Partner or Partners so as to restore the number of Managing General Partners to at least three.

In the event no Managing General Partner remains, it is the responsibility of the Non-Managing General Partner to call a meeting of the limited partners ("Limited Partners"), to be held within 60 days of the date the last Managing General Partner ceased to act in such capacity, for the purpose of determining whether to elect to continue the business of the Fund and, if the business is to be continued, electing new Managing General Partners. During a period of time in which no Managing General Partner remains, the Non-Managing General Partner is permitted to engage in the management, conduct and operation of the business of the fund to the same extent as a Managing General Partner.

According to the application, the Fund's Limited Partners have no right to control the Fund's business, but may exercise certain rights and powers of a Limited Partner under the partnership agreement, including voting rights, and the giving of consents and approvals provided for in the partnership agreement. The partnership agreement authorizes Limited Partners to exercise voting rights on certain matters, including the right to elect or remove general partners, approval or termination of investment advisory contracts, ratification or rejection of the appointment of the independent public accountants of the Fund, approving or disapproving the sale of all or substantially all the assets of the fund, and the right to amend the partnership agreement, other than amendments to admit additional or substituted Limited Partners or to return or reduce the amount of capital contributions of the Limited and General Partners.

applicants state that they have been advised that it is the opinion of California counsel that the existence or exercise of these voting rights does not subject the Limited Partners to liability as general partners under the Uniform Limited Partnership Act of California. However, Applicants further state that it is possible that because of such voting rights, the Limited Partners might be found to be subject to liability as general partners by the courts of another state. In this regard, the Applicants state that, if a Limited Partner is sued to satisfy an obligation of the fund, the fund will, upon notice of such suit by the Limited Partner, either satisfy such obligation or, if it believes such suit is without merit, undertake the defense of such suit. In addition, the Fund intends to include in all material contracts a provision limiting the claims of creditors to Fund assets. The Applicants specifically recognize that in the event a Limited Partner should be found to be liable as a general partner, he will be required to satisfy such a claim personally to the extent that the assets and insurance of the fund are insufficient to reimburse him.

Applicants state that the entire interest of the partners will be divided into Shares of Partnership Interest ("Shares") which will be offered to investors. Upon the sale of a Share to a purchaser who is not a Limited Partner, and upon receipt of a signed partnership authorization including a power of attorney required of all Limited Partners, the purchaser will become a Limited Partner upon the filing of an amendment to the partnership agreement. The Applicants state that it will not be necessary to obtain the consent of the Limited or General Partners in order to effect the admission of a Limited Partner. According to the application, the Managing General Partners agree to process such amendments at least weekly. However, while amendments will processed at least weekly, income, loss, gain, expense or credits will be allocated to a holder of Shares on the day following receipt of payment for Shares purchased and a signed partnership authorization. Applicants further state a limited Partner may assign his Shares in certain situations. A Limited Partner may pledge his Shares to a person as collateral, and if the holder becomes the owner of such Shares due to foreclosure or otherwise, the holder may receive distributions and redeem the Shares, but may not be substituted as a Limited Partner. A Limited Partner may assign his Shares by gift to or for the benefit of members of his immediate family, and those successors in interest of a Limited Partner may succeed to his interest in the Shares. Upon such assignment of, or succession to, Shares of the fund, any person not previously qualified as a Limited Partner will be promptly substituted as a Limited Partner upon the filing of an amendment to the partnership agreement, provided a signed partnership authorization (including a power of attorney required of all Limited Partners) is delivered to the Fund. Applicants further state that (1) all items of Fund income, gain, loss, deductions and credits will be allocated equally among the outstanding Shares of the Fund; and (2) all shares will have equal rights and one vote each on all matters to be voted upon by Limited partners, and are redeemable.

As a condition of granting the ruling noted above, the Internal Revenue Service required at all times the General Partners to have in the aggregate a one percent interest in all Fund items of income, gains and losses. In order to meet this condition the partnership agreement provides that the Non-Managing General Partners shall be obligated to purchase in the aggregate one percent of the outstanding Shares of the Fund, which shall be unassignable except to another General Partner. Boston undertakes that at all times while serving as Non-Managing General Partner it will own a sufficient amount of the Fund's outstanding Shares so that the aggregate Share owner-ship of the General Partners will amount to at least one percent of the outstanding Shares of the Fund. Boston also undertakes that it will not withdraw as a Non-Managing General Partner except on 2 years notice or unless another General Partner has assumed this obligation. The Fund undertakes that any successor Non-Managing General Partner will agree to the same undertakings as Boston.

The Applicants state that the Fund is being organized as a limited partnership because it may not qualify for the "pass-through" tax treatment afforded regulated investment companies under Subchapter M of the Internal Revenue Code (the "Code") if it were organized as a corporation. The Fund has been advised that it would not qualify as a regulated investment company if more than 10 percent of its gross income consisted of items other than dividends, interest, and gains from the sale or other disposition of stock or securities. Since the gains from the purchase and sale of commodity futures contracts will not qualify as dividends, interest or gains from the sale or other disposition of stock or securities, the Fund may not be able to qualify under Subchapter M of

the Code. Consequently, Applicants state that the income and gains earned by the Fund would be subject to Federal income taxation at two levels, a tax at the Fund level and a second tax at the shareholder level on income and gains distributed as dividends or other distributions. Applicants argue that by organizing as a limited partnership, the Fund and its shareholders will receive substantially the same "pass-through" tax treatment afforded regulated investment companies qualifying under Subchapter M of the Code. Accordingly, Applicants state that organizing as a partnership will enable the fund and its shareholders to be taxed on the more favorable basis accorded most other registered investment companies and their shareholders.

Section 10(a) of the Act provides, in pertinent part, that no registered investment company shall have a board of directors more than 60 percent of the members of which are persons who are interested persons of such registered company.

Section 2(a)(12) of the Act defines "director" to include any director of a corporation or any person performing similar functions with respect to any organization, whether incorporated or unincorporated.

Section 15(c) of the Act provides, that it shall be unlawful for any registered investment company having a board of directors to enter into, renew, or perform any contract or agreement, written or oral, whereby a person undertakes to regularly serve or act as investment adviser of such company, unless the terms of such contract or agreement any renewal thereof have been approved by the vote of a majority of directors, who are not parties to such contract or agreement or interested persons of any such party.

Section 2(a)(19)(A) of the Act provides, in pertinent part, that an "interested person" of another person, when used with respect to an investment company, means (1) any affiliated person of such investment company, and (2) any interested person of any investment adviser or principal underwriter for such company. Section 2(a)(19)(B) of the Act provides, in pertinent part, that an "interested person" of another person, when the other person is an investment adviser or principal underwriter for any investment company, means any affiliated person of such investment adviser or principal underwriter.

Section 2(a)(3)(D) of the Act provides, in pertinent part, that an "affiliated person" of another person means any officer, director, partner, co-partner or employee of such other person.

Applicants submit that the relationship of the Managing General Partners to the Fund is essentially identical to the relationship of directors to an incorporated investment company. They state that, nevertheless, the provisions of section 2(a)(3) of the Act would make all Managing General Partners affiliated persons of Boston, the adviser, which is the Non-Managing General Partner, with the result that the Managing General Partners would be deemed interested persons of the Fund and its Non-Managing general Partner under section 2(a)(19) of the Act.

Applicants, to ensure compliance with sections 10(a) and 15(c) of the Act, have requested that the Fund and its Managing General Partners be exempted from the provisions of Section 2(a)(19) to the extent that the Fund's Managing General Partners would otherwise be deemed to be interested persons of the Fund or its Non-Managing General Partner solely because they are general partners of the Fund, a limited partnership in which the Fund's investment adviser, Boston, is also a general partner. Applicants assert that since section 2(a)(19) excludes from the definition of interested persons of an investment company those individuals who would be interested persons solely because they are directors or owners of securities of an investment company and since the Non-Managing General Partner is excluded from participation in the management of the Fund except in the limited circumstances described above, it is consistent with the purposes fairly intended by the policy and provisions of the Act to grant the requested exemption from the provisions of section 2(a)(19).

Applicants state that, prior to a public offering of Shares, the Fund will obtain an errors and omissions insurance policy, up to a maximum amount of $5 million (with a $50,000 deductible for any one claim) and will be named assured in Stockbroker Blanket Bond Standard Form #14 having an aggregate coverage of at least double the minimum amount required by Rule 17g-1 under the Act, but in no event will such amount be less than $10 million in the aggregate. Applicants further state that they will take no action to cancel such policies and that, if such policies are cancelled by the insurance companies, they will seek to obtain comparable insurance.

Applicants agree that any exemptive order granted in this matter may be conditioned upon the continued effectiveness of the above-described undertakings. They submit that the granting of the requested exemption is necessary and appropriate in the public interest and consistent with the protection of investors and the purposes fairly intended by the policy and provisions of the Act.

Section 6(c) of the Act provides, in pertinent part, that the Commission may, by order upon application, conditionally or unconditionally exempt any person, security, or transaction, or any class or classes of persons, securities, or transactions from any provision of the Act or any rule or regulation under the Act, if and to the extent that such exemption is necessary or appropriate in the public interest and consistent with the protection of investors and the purposes fairly intended by the policy and provisions of the Act.

Notice if further given that any interested person may, not later than October 25, 1979, at 5:30 p.m., submit to the Commission in writing a request for a hearing on the application accompanied by a statement as to the nature of his interest, the reasons for such request and the issues, if any, of fact or law proposed to be controverted, or he may request that he be notified if the Commission should order a hearing thereon. Any such communication should be addressed: Secretary, Securities and Exchange Commission, Washington, D.C. 20549. A copy of such request shall be served personally, or by mail upon the Applicant at the address stated above. Proof of such service (by affidavit or, in the case of an attorney-at-law by certificate) shall be filed contemporaneously with the request. As provided by Rule 0-5 of the Rules and Regulations promulgated under the Act, an order disposing of the application herein will be issued as of course following said date unless the Commission thereafter orders a hearing upon request or upon the Commission's own motion. Persons who request a hearing, or advice as to whether a hearing is ordered, will receive any notices and orders issued in this matter, including the date of the hearing (if ordered) and any postponements thereof.

For the Commission, by the Division of Investment Management, pursuant to delegated authority.

George A. Fitzsimmons,

Secretary.

[FR Doc. 79-31163 Filed 10-9-79; 8:45 am]

BILLING CODE 8010-01-M

[File No. 81-569]

MWA Company; Application and Opportunity for Hearing

September 27, 1979.

Notice is hereby given that MWA Company (the "Applicant"), has filed an application pursuant to Section 12(h) of the Securities Exchange Act of 1934, as amended ("the 1934 Act"), for an order exempting it from the periodic reporting requirements under Section 15(d) of the 1934 Act.

The Applicant states:

1) On June 22, 1979, the Applicant became a wholly owned subsidiary of Mitchell Corporation, as a result of a merger.

2) Stockholders were given pertinent information concerning the Applicant and the merger in proxies dated May 24, 1979, solicited in accordance with Regulation 14A of the 1934 Act, and the Applicant's Form 8-K report dated June 25, 1979.

For a more detailed statement of the information presented, all persons are referred to said application which is on file in the offices of the Commission at 1100 L Street NW., Washington, D.C. 20549.

Notice if further given that any interested person no later than October 22, 1979 may submit to the Commission in writing his views or any substantial facts bearing on this application or the desirability of a hearing thereon. Any such communication or request should be addressed: Secretary, Securities and Exchange Commission, 500 North Capitol Street NW., Washington, D.C. 20549, and should state briefly the nature of the interest of the person submitting such information or requesting the hearing, the reason for such request, and the issues of fact and law raised by the application which he desires to controvert. At any time after said date, an order granting the application may be issued upon request or upon the Commission's own motion.

For the Commission, by the Division of Corporation Finance, pursuant to delegated authority.

George A. Fitzsimmons,

Secretary.

[FR Doc. 79-31169 Filed 10-9-79; 8:45 am]

BILLING CODE 8010-01-M

[Release No. 16234; File No. SR-PSE-79-13]

Pacific Stock Exchange Incorporated, 301 Pine Street, San Francisco, California 94104

Notice of Filing of Proposed Rule Changes and Order Extending the Time Period Within Which the Commission Must Take Action on the Proposed Rules

The Pacific Stock Exchange Incorporated submitted on September 9, 1979 proposed rule changes under Rule 19b-4 in reponse to certain of those recommendations made by the Commission's Special Study of the Options Markets which the Commission requested the self-regulatory organizations which currently list and trade standardized options or which have proposed to list and trade standardized options to implement before further expansion of the standardized options markets can be permitted.[1]

Publication of the submission is expected to be made in the Federal Register during the week of October 1, 1979. In order to assist the Commission to determine whether to approve the proposed rule changes or institute proceedings to determine whether the proposed rule changes should be disapproved, interested persons are invited to submit written data, views, and arguments concerning the submission by November 2, 1979. Persons desiring to make written comments should file six copies thereof with the Secretary of the Commission, Securities and Exchange Commission, 500 North Capitol Street, Washington, D.C. 20549. Reference should be made to File No. SR-PSE-79-13.

The Commission has determined that it is necessary and appropriate to provide additional time for public comment on and Commission consideration of the proposed rule changes. Because the subject filing contains numberous rule proposal which, if approved, would affect significantly the operation of the standardized options markets, the Commission believes that additional time is necessary to enable commentators to address meaningfully the substance of the proposals and to enable the Commission to give the proposals the careful consideration they warrant before determining whether to approve the proposals or to initiate proceedings to determine whether they should be disapproved.

Accordingly, the Commission, pursuant to section 19(b)(2) of the Act, hereby extends until 90 days from the date of publication of notice of filing of the proposed rule changes captioned above, the time period within which the Commission must either approve the proposed rule changes or institute proceedings to determine whether the proposed rule changes should be disapproved.

Copies of the submission, all subsequent amendments, all written statements with respect to the proposed rule changes which are filed with the Commission, and of all written communications relating to the proposed rule changes between the Commission and any person, other than those which may be withheld from the public in accordance with the provisions of 5 U.S.C. section 552, will be available for inspection and copying at the Commission's Public Reference Room, 1100 L Street, N.W., Washington, D.C. Copies of the filing and of any subsequent amendments will also be available at the principal office of the above-mentioned self-regulatory organization.

For the Commission, by the Division of Market Regulation, pursuant to delegated authority.

George A. Fitzsimmons,

Secretary.

[FR Doc. 79-31168 Filed 10-9-79; 8:43 am]

BILLING CODE 8010-01-M

[1] *See* Securities Exchange Act Release No. 15575 (February 22, 1979), Section L.

DEPARTMENT OF STATE

[Public Notice CM-8/235]

Study Group 1 of the U.S. Organization for the International Telegraph and Telephone Consultative Committee (CCITT); Meeting

The Department of State announces that Study Group 1 of the U.S. Organization for the International Telegraph and Telephone Consultative Committee (CCITT) will meet on October 31, 1979 at 10:00 a.m. in Room 511 of the Federal Communications Commission, 1919 M Street, N.W., Washington, D.C. This Study Group deals with U.S. Government regulatory aspects of international telegraph and telephone operations and tariffs.

The Study Group will discuss international telecommunications questions relating to telegraph, telex, new record services, data transmission and leased channel services in order to develop U.S. positions to be taken at international CCITT meetings.

Members of the general public may attend the meeting and join in the

discussion subject to instructions of the Chairman. Admittance of public members will be limited to the seating available.

Requests for further information should be directed to Richard H. Howarth, State Department, Washington, D.C. 20520, telephone (202) 632-1007.

Dated: October 1, 1979.

Richard H. Howarth,

Chairman, U.S. CCITT National Committee.

[FR Doc. 79-31286 Filed 10-9-79; 8:45 am]

BILLING CODE 4710-07-M

DEPARTMENT OF THE TREASURY

U.S. Customs Service

Review of Customs Regulatory Reporting Requirements

AGENCY: U.S. Customs Service, Department of the Treasury.

ACTION: Request for public comments.

SUMMARY: Customs is reviewing its regulatory reporting requirements to ensure that they are meaningful. An analysis is being made to determine the need for certain reports and whether the information required may be available elsewhere. Customs also is considering the feasibility of adopting specific sunset or periodic review procedures for certain reporting requirements. To assist in this program, the public is invited to submit comments concerning reporting requirements which it considers to be unnecessary or, if necessary, which may be modified or simplified so that the required information may be furnished in a less burdensome manner.

DATE: Comments must be received on or before December 10, 1979.

ADDRESS: Written comments may be addressed to the Commissioner of Customs, Attention: Regulations and Research Division, U.S. Customs Service, 1301 Constitution Avenue, N.W., Room 2335, Washington, D.C. 20229.

FOR FURTHER INFORMATION CONTACT: Travis J. Towson, Logistics Management Division, U.S. Customs Service, 1301 Constitution Avenue, N.W., Washington, D.C. 20229 (202-566-5442).

SUPPLEMENTARY INFORMATION:

Background

Customs has had a program since 1975 to review periodically its regulatory reporting requirements. Forms and the data they require for completion are under continuing review and subject to revision, consolidation, or elimination in an ongoing reporting reduction program to manage Customs records economically and efficiently.

In response to Executive Order 12044, "Improving Government Regulations", and the Treasury Department directive published in the Federal Register on November 18, 1978 (43 FR 52120), implementing that Executive Order, Customs is reviewing its regulations with a view, among other things, to ensure that regulatory reporting requirements are meaningful and to eliminate any reporting requirements found to be unnecesary. As part of this ongoing program, an analysis is being made to determine the need for certain reports and whether the required information may be available elsewhere. An effort is being made to determine which reports are necessary, which may be modified or simplified so as to obtain the same information in a less burdensome manner, and which are achieving the policy goals for which they were established. Consideration also is being given to the feasibility of adopting specific sunset or periodic review procedures for certain reporting requirements.

Because public participation in this review process will be of substantial assistance to Customs, interested persons are invited to submit written comments concerning those reporting requirements which they consider should be reviewed for revision or elimination, or which are difficult to understand or costly to comply with.

If it is determined on the basis of Customs review or the comments received that any reporting requirments require modification or simplification, or may be eliminated, or that specific sunset or periodic review procedures are desirable, another notice, describing the specific reporting requirements and proposed changes and requesting additional comments, will be published in the Federal Register before final action is taken.

Comments

Consideration will be given to any written comments, preferably in triplicate, submitted timely to the Commissioner of Customs. Comments submitted will be available for public inspection in accordance with section 103.8(b), Customs Regulations (19 CFR 103.8(b)), during regular business hours at the Regulations and Research Division, U.S. Customs Service, 1301 Constitution Avenue, N.W., Room 2335, Washington, D.C. 20229.

Drafting Information

The principal author of this document was Lawrence P. Dunham, Regulations and Research Division, U.S. Customs Service. However, personnel from other Customs offices participated in its development.

Dated: October 3, 1979.

William T. Archey,

Acting Commissioner of Customs.

[FR Doc. 79-31210 Filed 10-9-79; 8:45 am]

BILLING CODE 4810-22-M

Office of the Secretary

[Supplement to Department Circular, Public Debt Series—No. 21-79]

Treasury Notes; Interest Rate on Notes of Series X-1981

October 4, 1979.

The Secretary announced on October 3, 1979, that the interest rate on the notes designated Series X-1981, described in Department Circular—Public Debt Series—No. 21-79, as amended, dated September 19, 1979, will be 10⅛ percent. Interest on the notes will be payable at the rate of 10⅛ percent per annum.

Paul H. Taylor,

Fiscal Assistant Secretary.

Supplementary Statement

The announcement set forth above does not meet the Department's criteria for significant regulations and, accordingly, may be published without compliance with the Departmental procedures applicable to such regulations.

[FR Doc. 79-31254 Filed 10-9-79; 8:45 am]

BILLING CODE 4810-40-M

INTERSTATE COMMERCE COMMISSION

[Notice No. 138]

Assignment of Hearings

Cases assigned for hearing, postponement, cancellation or oral argument appear below and will be published only once. This list contains prospective assignments only and does not include cases previously assigned hearing dates. The hearings will be on the issues as presently reflected in the Official Docket of the Commission. An attempt will be made to publish notices of cancellation of hearings as promptly as possible, but interested parties should take appropriate steps to insure that they are notified of cancellation or postponements of hearings in which they are interested.

MC 87103 (Sub-27F), Miller Transfer And Rigging Co., now assigned for hearing on November 28, 1979 (1 day), at Columbus, OH in a hearing room to be later designated.

MC 110988 (Sub-376F), Schneider Tank Lines, Inc., now assigned for hearing on

November 29, 1979 (2 days), at Columbus OH in a hearing room to be later designated.

MC 117993 (Sub-11F), Fruitbelt Trucking, Inc., now assigned for hearing on December 3, 1979 (2 days), at Buffalo, NY in a hearing room to be later designated.

MC 145736 (Sub-1F), Edmond Joseph Rainville, now assigned for hearing on December 5, 1979 at Buffalo, NY in a hearing room to be later designated.

MC 95098 (Sub-1F), Boonton Transport, now assigned for hearing on December 17, 1979 (1 week), at Newark, NY in a hearing room to be later designated.

MC 103926 (Sub-86F), W. T. Mayfield Sons Trucking Company, transferred to Modified Procedure.

MC 112184 (Sub-65F), The Manfredi Motor Transit Co., now assigned for hearing on November 27, 1979 (2 days), at Cincinnati, OH, location of hearing room will be designated later.

MC 123685 (Sub-24F), Peoples Cartage, Inc., now assigned for hearing on November 29, 1979 (2 days), at Cincinnati, OH, location of hearing room will be designated later.

MC 128616 (Sub-26E), Gelco Courier Services, Inc., now assigned for hearing on December 3, 1979 (2 days), at Cincinnati, OH, location of hearing room will be designated later.

MC 51018 (Sub-11F), The Besl Transfer Co., now assigned for hearing on December 5, 1979 (3 days), at Cincinnati, OH, location of hearing room will be designated later.

MC 145633F, Walter B. Maki, DBA Maki International & Company, now assigned for hearing October 15, 1979 at Miami, FL, is canceled transferred to modified procedure.

MC 129537 (Sub-24F), Reeves Transportation Co., now assigned for hearing on October 15, 1979 (1 week), at Montgomery, AL will be held in the Azalea Room, Ramada Inn East, 1355 East Bypass, at I-85, instead of Room No. 816, Aronov Building, 474 South Court Street.

MC 65895 (Sub-5F), Reddaway's Truck Line, now assigned for hearing on October 29, 1979 (2 weeks), at Salem, Oregon in a hearing room to be later designated.

MC 115331 (Sub-477F), Truck Transport Incorporated, now assigned for hearing on November 6, 1979 (1 day) at St. Louis, MO will be held in Court Room 3, Room 516, U.S. Court & Custom House, 1114 Market.

MC 134501 (Sub-44F), Incorporated Carriers, Ltd., now assigned for hearing on November 7, 1979 (1 day) at St. Louis, MO, will be held in Court Room 3, Room 516, U.S. Court & Custom House, 1114 Market.

MC 29886 (Sub-363F), Dallas & Mavis Forwarding Co., Inc., now assigned for hearing on November 8, 1979 (1 day) at St. Louis, MO, will be held in Court Room 3, Room 516, U.S. Court & Custom House, 1114 Market.

MC 31389 (Sub-269F), McLean Trucking Company, now assigned for continued hearing on November 6, 1979 (9 days), at Memphis, TN, in a hearing room to be later designated.

MC 139934 (Sub-4F), All Southern Trucking, Inc., now assigned for continued hearing on November 8, 1979 (1 day), at Tampa, FL, in a hearing room to be later designated.

MC-C-10305, Pennsylvania Truck Lines, Inc., and James H. Russell, Inc.—Investigation and Revocation of Certificates, now assigned for hearing October 15, 1979 at Philadelphia, PA is postponed indefinitely.

MC 145153 (Sub-2F), Doubledekker, Inc., now assigned for hearing on October 29, 1979, at Washington, DC is canceled and application is dismissed.

MC 142416 (Sub-1), M1F, Hamilton Transfer, Storage & Feeds Inc., now being assigned for hearing on December 3, 1979 (1 week) at Casper, WY in a hearing room to be designated later.

MC 143059 (Sub-45F), Mercer Transportation Co., now being assigned for hearing on November 14, 1979 (1 day) at the Offices of the Interstate Commerce Commission, Washington, DC.

MC 107818 (Sub-29), M1F, Greenstein Trucking Company, Application Dismissed.

MC 145982F, Motor Transportation Company, Inc., now being assigned for hearing on December 5, 1979 (3 days), at Hazelton, PA in a hearing room to be designated later.

MC 97345 (Sub-4F), Duffy Storage & Moving Company D/B/A Duffy Heavy Moving Company, now assigned for Prehearing Conference on October 9, 1979 is canceled and reassigned for hearing on November 6, 1979 (9 days), at Denver, CO in a hearing room to be designated later.

MC 1494 (Sub-26F), Gross Common Carrier, Inc., now being assigned for hearing on December 3, 1979 (2 weeks) at Madison, WI in a hearing room to be designated later.

Ex Parte No. 352, In The Matter of Clarence William Vandergrift, now assigned for hearing on October 16, 1979 at Washington, DC, is postponed indefinitely.

Agatha L. Mergenovich,

Secretary.

[FR Doc. 79-31202 Filed 10-9-79; 8:45 am]

BILLING CODE 7035-01-M

[Permanent Authority Decisions Volume No. 165]

Decison-Notice

Decided: Sept. 10, 1979.

The following applications, filed on or after March 1, 1979, are governed by Special Rule 247 of the Commission's *Rules of Practice* (49 CFR § 1100.247). These rules provide, among other things, that a petition for intervention, either in support of or in opposition to the granting of an application, must be filed with the Commission within 30 days after the date notice of the application is published in the Federal Register. Protests (such as were allowed to filings prior to March 1, 1979) *will be rejected.* A petition for intervention without leave must comply with Rule 247(k) which requires petitioner to demonstrate that it (1) holds operating authority permitting performance of any of the service which the applicant seeks authority to perform, (2) has the necessary equipment and facilities for performing that service, and (3) has performed service within the scope of the application either (a) for those supporting the application, or, (b) where the service is not limited to the facilities of particular shippers, from and to, or between, any of the involved points.

Persons unable to intervene under Rule 247(k) may file a petition for leave to intervene under Rule 247(l) setting forth the specific grounds upon which it is made, including a detailed statement of petitioner's interest, the particular facts, matters, and things relied upon, including the extent, if any, to which petitioner (a) has solicited the traffic or business of those supporting the application, or, (b) where the identity of those supporting the application is not included in the published application notice, has solicited traffic or business identical to any part of that sought by applicant within the affected marketplace the extent to which petitioner's interest will be represented by other parties, the extent to which petitioner's participation may reasonably be expected to assist in the development of a sound record, and the extent to which participation by the petitioner would broaden the issues or delay the proceeding.

Petitions not in reasonable compliance with the requirements of the rules may be rejected. An original and one copy of the petition to intervene shall be filed with the Commission, and a copy shall be served concurrently upon applicant's representative, or upon applicant if no representative is named.

Section 247(f) provides, in part, that an applicant which does not intend to timely prosecute its application shall promptly request that it be dismissed, and that failure to prosecute an application under the procedures of the Commission will result in its dismissal.

If an applicant has introduced rates as an issue it is noted. Upon request, an applicant must provide a copy of the tentative rate schedule to any protestant.

Further processing steps will be by Commission notice decision, or letter which will be served on each party of record. *Broadening amendments will not be accepted after the date of this publication.*

Any authority granted may reflect administrative acceptable restrictive amendments to the service proposed below. Some of the applications may have been modified to conform to the Commission's policy of simplifying grants of operating authority.

Findings

With the exception of those applications involving duly noted

problems (e.gs., unresolved common control, unresolved fitness questions, and jurisdictional problems) we find, preliminarily, that each common carrier applicant has demonstrated that its proposed service is required by the present and future public convenience and necessity, and that each contract carrier applicant qualifies as a contract carrier and its proposed contract carrier service will be consistent with the public interest and the transportation policy of 49 U.S.C. § 10101. Each applicant is fit, willing, and able properly to perform the service proposed and to conform to the requirements of Title 49, Subtitle IV, United States Code, and the Commission's regulations. Except where specifically noted, this decision is neither a major Federal action significantly affecting the quality of the human environment nor a major regulatory action under the Energy Policy and Conservation Act of 1975.

In those proceedings containing a statement or note that dual operations are or may be involved we find, preliminarily and in the absence of the issue being raised by a petitioner, that the proposed dual operations are consistent with the public interest and the transportation policy of 49 U.S.C. § 10101 subject to the right of the Commission, which is expressly reserved, to impose such terms, conditions or limitations as it finds necessary to insure that applicant's operations shall conform to the provisions of 49 U.S.C. § 10930(a) [formerly section 210 of the Interstate Commerce Act].

In the absence of legally sufficient petitions for intervention, filed within 30 days of publication of this decision-notice (or, if the application later becomes unopposed), appropriate authority will be issued to each applicant (except those with duly noted problems) upon compliance with certain requirements which will be set forth in a notification of effectiveness of the decision-notice. To the extent that the authority sought below may duplicate an applicant's other authority, such duplication shall be construed as conferring only a single operating right.

Applicants must comply with all specific conditions set forth in the grant or grants of authority within 90 days after the service of the notification of the effectiveness of this decision-notice, or the application of a non-complying applicant shall stand denied.

By the Commission, Review Board Number 2, Members, Boyle, Eaton, and Liberman.

Agatha L. Mergenovich,

Secretary.

Note.—All applications are for authority to operate as a common carrier, by motor vehicle, in interstate or foreign commerce, over irregular routes, except as otherwise noted.

MC 1783 (Sub-25F), filed May 11, 1979. Applicant: BLUE LINE EXPRESS, INC., 260 D.W. Hwy, Nashua, NH 03060. Representative: Charles A. Webb, Suite 800 South, 1800 M Street, NW., Washington, DC 20036. To operate as a *common carrier*, by motor vehicle, in interstate or foreign commerce, over regular routes, transporting *general commodities* (except those of unusual value, classes A and B explosives, household goods as defined by the Commission, commodities in bulk, and those requiring special equipment), serving Plainview, NY, and Brewer and Bangor, ME, as off-route points in connection with carrier's otherwise authorized regular-route operations. (Hearing site: Concord, NH, or Boston, MA.)

MC 2202 (Sub-591F), filed May 10, 1979. Applicant: ROADWAY EXPRESS, INC., P.O. Box 471, 1077 Gorge Blvd., Akron, OH 44309. Representative: William O. Turney, Suite 1010, 7101 Wisconsin Avenue, Washington, DC 20014. To operate as a *common carrier*, by motor vehicle, in interstate or foreign commerce, over regular routes, transporting *general commodities* (except those of unusual value, classes A and B explosives, household goods as defined by the Commission, commodities in bulk, and those requiring special equipment), between Springfield, MO, and Rogers, AR: from Springfield over U.S. Hwy 60 to junction MO Hwy 37, then over MO Hwy 37 to junction U.S. Hwy 62, then over U.S. Hwy 62 to Rogers, and return over the same route, serving no intermediate point. (Hearing site: Ft. Smith, AR.)

MC 2202 (Sub-592F), filed May 14, 1979. Applicant: ROADWAY EXPRESS, INC., P.O. Box 471, 1077 Gorge Blvd., Akron, OH 44309. Representative: William O. Turney, Suite 1010, 7101 Wisconsin Ave., Washington, DC 20014. To operate as a *common carrier*, by motor vehicle, in interstate or foreign commerce over regular routes, transporting *general commodities* (except those of unusual value, classes A and B explosives, household goods as defined by the Commission, commodities in bulk, and those requiring special equipment), serving points in Sullivan and Hawkins Counties, TN) as off-route points in connection with otherwise authorized regular-route operations. (Hearing site: Kingsport, TN, or Washington, DC.)

MC 2202 (Sub-593F), filed May 9, 1979. Applicant: ROADWAY EXPRESS, INC., P.O. Box 471, 1077 Gorge Blvd., Akron, OH 44309. Representative: William O. Turney, Suite 1010, 7101 Wisconsin Ave., Washington, DC 20014. To operate as a *common carrier*, by motor vehicle, in interstate and foreign commerce, transporting over regular routes, *general commodities* (except those of unusual value, classes A and B explosives, household goods as defined by the Commission, commodities in bulk, and those requiring special equipment), serving (1) those points in MN on, east, and south of a line beginning at the IA–MN State line, and extending along U.S. Hwy 65 to junction U.S. Hwy 12 at Minneapolis, and then along U.S. Hwy 12 to the MN–WI State line, and (2) points in WI on and south of a line beginning at the MN–WI State line, and extending along U.S. Hwy 12 to junction WI Hwy 29, then along WI Hwy 29 to Green Bay, WI, and then along U.S. Hwy 141 to Lake Michigan at Manitowoc, WI, as off-route points in connection with applicant's presently authorized regular-route operations. (Hearing site: Milwaukee, WI.)

MC 4963 (Sub-71F), filed May 17, 1979. Applicant: JONES MOTOR CO., INC., Bridge Street & Schuylkill Road, Spring City, PA 19475. Representative: Roland Rice, Suite 501, Perpetual Bldg., 1111 E Street, NW., Washington, DC 20004. Transporting (1) *paper, paper products, and cellulose products*, and (2) *materials, equipment, and supplies* used in the manufacture and distribution of the commodities in (1) above (except commodities in bulk), between the facilities of The Procter & Gamble Paper Products Company, in Wyoming, Lackawanna, and Luzerne Counties, PA, on the one hand, and, on the other, the facilities of The Procter & Gamble Paper Products Company, at (a) Neelys Landing, MO, and (b) Cheboygan, MI. (Hearing site: Washington, DC.)

MC 16513 (Sub-13F), filed May 14, 1979. Applicant: REISCH TRUCKING & TRANSPORTATION CO., INC., 819 Union Avenue, Pennsauken, NJ 06110. Representative: Jeffrey A. Vogelman, Suite 400, Overlook Building, 6121 Lincolnia Road, Alexandria, VA 22312. Transporting (1) *plastic articles*, and (2) *materials equipment, and supplies* used in the bottling, sale, and distribution of beverages (except commodities in bulk), from the facilities of Owens-Illinois, Inc., at or near Milford and New Haven, CT, to points in NY. (Hearing site: Washington, DC.)

MC 82063 (Sub-108F), filed May 18, 1979. Applicant: KLIPSCH HAULING CO., 10795 Watson Road, Sunset Hills, MO 63127. Representative: E. Stephen Heisley, 805 McLachlen Bank Bldg., 666 Eleventh St., NW., Washington, DC. 20001. Transporting *liquid chemicals*, in bulk, in tank vehicles, from Houston, TX and the facilities of Monsanto Company, at or near Chocolate Bayou and Texas City, TX, to those points in the United States in and east of MN, IA, MO, AR, and LA. (Hearing site: St. Louis, MO, or Houston, TX.)

MC 98752 (Sub-6F), filed May 17, 1979. Applicant: ZEPHYR LINE, INC., 84 Western Avenue, West Springfield, MA 01089. Representative: Frank J. Weiner, 15 Court Square, Boston, MA 02108. Transporting *such commodities* as are dealt in by retail department stores (except commodities in bulk), between points in MA and CT. (Hearing site: Boston, MA.)

MC 107012 (Sub-369F), filed May 14, 1979. Applicant: NORTH AMERICAN VAN LINES, INC., 5001 U.S. Hwy 30 West, P.O. Box 988, Fort Wayne, IN 46801. Representative: David D. Bishop (same address as applicant). Transporting (1) *recreational equipment*, and (2) *parts and accessories* for the commodities in (1) above, from the facilities of Coleman Company, Inc., at or near New Braunfels, TX, to points in the United States (except AK, HI, and TX). (Hearing site: Wichita, KS, or Kansas City, MO.)

MC 107012 (Sub-370F), filed May 14, 1979. Applicant: NORTH AMERICAN VAN LINES, INC., 5001 U.S. Hwy 30 West, P.O. Box 988, Fort Wayne, IN 46801. Representative: Steve Clifford (same address as applicant). Transporting *doors*, from the facilities of Timco Industries, Inc., at or near Cuero, TX, to points in the United States (except AK and HI). (Hearing site: Houston, TX, or Washington, DC.)

MC 107012 (Sub-371F), filed May 14, 1979. Applicant: NORTH AMERICAN VAN LINES, INC., 5001 U.S. Hwy 30 West, P.O. Box 988, Fort Wayne, IN. 46801. Representative: Steve C. Clifford (same address as applicant). Transporting *such commodities* as are dealt in by retail department stores or catalogue sales businesses (except commodities in bulk, and those which because of size or weight require the use of special equipment), from Los Angeles, CA, Charlotte, NC, New York, NY, and Philadelphia, PA, to the facilities of Spiegel, Inc., at or near Chicago, IL. (Hearing site: Chicago, IL, or Washington, DC.)

MC 107323 (Sub-56F), filed May 18, 1979. Applicant: GILLILAND TRANSFER CO., a corporation, 7180 West 48th Street, Fremont, MI 49412. Representative: Donald B. Levine, 39 South LaSalle Street, Chicago, IL 60603. Transporting (1) *insulation and home improvement materials*, and (2) *materials, equipment, and supplies* used in the manufacture, sale, distribution, or installation of the commodities in (1) above, (except commodities in bulk), from Florence, KY, to points in MI and WI, and those in IL on, north, and east of a line beginning at the IN–IL State line and extending along Interstate Hwy 80 to junction U.S. Hwy 51, and then along U.S. Hwy 51 to the IL–WI State line. (Hearing site: Chicago, IL.)

MC 107403 (Sub-1213F), filed May 14, 1979. Applicant: MATLACK, INC., Ten West Baltimore Ave., Lansdowne, PA 19050. Representative: Martin C. Hynes, Jr. (same address as applicant). Transporting *coke and coke breeze*, in bulk, in dump vehicles, from Erie, PA, and Toledo, OH, to points in CT, DE, IL, IN, IA, KY, ME, MD, MA, MI, MN, MO, NH, NJ, NY, OH, PA, RI, VT, VA, WV, WI, and DC. (Hearing site: Washington, DC.)

MC 107403 (Sub-1214F), filed May 14, 1979. Applicant: MATLACK, INC., Ten West Baltimore Avenue, Lansdowne, PA 19050. Representative: Martin C. Hynes, Jr. (same address as applicant). Transporting *liquid chemicals*, in bulk, in tank vehicles, from the facilities of Dow Chemical U.S.A., at Hanging Rock, OH, to points in MN, IA, MO, WI, IL, IN, KY, TN, MI, VA, WV, and those in NY on and west of a line beginning at Pt. Breeze, NY, and extending along NY Hwy 98 to junction NY Hwy 39, then along NY Hwy 39 to junction NY Hwy 16, at or near Yorkshire, NY then along NY Hwy 16 to junction NY Hwy 17, then along NY Hwy 17 to junction U.S. Hwy 219, and then along U.S. Hwy 219 to the NY–PA State line. (Hearing site: Washington, DC.)

MC 107403 (Sub-121F), filed May 7, 1979. Applicant: MATLACK, INC., Ten West Baltimore Ave., Lansdowne, PA 19050. Representative: Martin C. Hynes, Jr. (same address as applicant). Transporting *commodities in bulk*, in tank vehicles, between the Henderson County Riverport Authority Facility in Henderson County, KY, on the one hand, and, on the other, those points in the United States in and east of ND, SD, NE, KS, OK, and TX. (Hearing site: Louisville, KY, or Evansville, IN.)

MC 108313 (Sub-15F), filed May 14, 1979. Applicant: CALEDONIA LINES, INC., P. O. Box 8, Caledonia, NY 14423. Representative: David A. Turano, 100 East Broad Street, Columbus, OH 43215. To operate as a *contract carrier*, by motor vehicle, in interstate or foreign commerce, over irregular routes, transporting *chlorine*, in bulk, in tank vehicles, from Ashtabula, OH, and Moundsville, WV, to the facilities of Allied Chemical Corporation, Indutrial Chemical Division, at or near Wilson, NY, under continuing contract(s) with Allied Chemical Corporation, Industrial Chemical Division, of Morristown, NJ. (Hearing site: Columbus, OH.)

MC 111812 (Sub-644F), filed May 11, 1979. Applicant: MIDWEST COAST TRANSPORT, INC., P.O. Box 1233, Sioux Falls, SD 57101. Representative: Ralph H. Jinks (same address as applicant). Transporting *meats, meat products and meat byproducts, articles distributed by meat-packing houses, and such commodities as are used by meat packers in the conduct of their business when destined to and for use by meat packers*, as described in sections A, C, and D of Appendix I to the report in *Descriptions in Motor Carrier Certificates*, 61 M.C.C. 209 and 766, (except hides and commodities in bulk), between the facilities of Lauridsen Foods, Inc., at or near Britt, IA, and the facilities of Armour & Co., at Mason City, IA, on the one hand, and, on the other, points in the United States (except AK and HI), restricted to the transportation of traffic originating at or destined to the named facilities. (Hearing site: Phoenix, AZ.)

MC 111812 (Sub-646F), filed May 17, 1979. Applicant: MIDWEST COAST TRANSPORT, INC., P.O. Box 1233, Sioux Falls, SD 57101. Representative: Ralph H. Jinks (same address as applicant). Transporting *such commodities* as are dealt in by (a) wholesale warehouses, and (b) grocery stores, and (c) food business houses, (except commodities in bulk and frozen foods), from Plymouth, WI, and Van Wert, OH, to points in CT, DE, FL, GA, ME, MD, MA, NH, NJ, NY, NC, PA, RI, VT, and VA, restricted to the transportation of traffic originating at the facilities of Borden, Inc. (Hearing site: Columbus, OH.)

MC 114273 (Sub-598F), filed May 17, 1979. Applicant: CRST, INC., P.O. Box 68, Cedar Rapids, IA 52406. Representative: Kenneth L. Core (same address as applicant). Transporting *iron and steel articles*, from the facilities of Wheeling-Pittsburgh Steel Corporation, at (a) Canfield, Martins Ferry, Mingo Junction, Steubenville, and Yorkville, OH, (b) Allenport and Monessen, PA, and (c) Beechbottom, Benwood, Follansbee, and Wheeling, WV, to points in IL. (Hearing site: Chicago, IL, or Washington, DC.)

MC 115322 (Sub-179F), filed May 15, 1979. Applicant: REDWING REFRIGERATED, INC., P.O. Box 10177, Taft, FL 32809. Representative: L. W. Fincher, P.O. Box 426, Tampa, FL 33601. Transporting malt beverages, from points in Lehigh County, PA, to points in FL. (Hearing site: Washington, DC.)

MC 115322 (Sub-180F), filed May 17, 1979. Applicant: REDWING REFRIGERATED, INC., P.O. Box 10177, Taft, FL 32809. Representative: L. W. Fincher, P.O. Box 426, Tampa, FL 33601. Transporting *foodstuffs*, from Wilson, NC, to points in AL, CT, DE, FL, GA, LA, ME, MD, MA, MS, NH, NJ, NY, PA, RI, SC, TN, VA, VT, and DC. (Hearing site: Baton Rouge, LA.)

MC 115353 (Sub-34F), filed May 17, 1979. Applicant: LOUIS J. KENNEDY TRUCKING COMPANY, a corporation, 342 Schuyler Avenue, Kearny, NJ 07032. Representative: Morton E. Kiel, Suite 6193, 5 World Trade Center, New York, NY 10048. To operate as a *contract carrier*, by motor vehicle, in interstate or foreign commerce, over irregular routes, transporting (1) *roofing*, and (2) *materials, equipment, and supplies* used in the manufacture, distribution, and installation of roofing, between the facilities of The Flintkote Company, at or near Peachtree City, GA, on the one hand, and, on the other, points in FL, under continuing contract(s) with The Flintkote Company, of Dallas, TX. (Hearing site: New York, NY.)

MC 116273 (Sub-231F), filed May 17, 1979. Applicant: D & L TRANSPORT, INC., 3800 South Laramie Avenue, Cicero, IL 60650. Representative: William R. Lavery (same address as applicant). Transporting *petroleum products*, in bulk, in tank vehicles, from Cyril, OK, to points and IL and IN. (Hearing site: Chicago, IL.)

MC 118202 (Sub-117F), filed May 14, 1979. Applicant: SCHULTZ TRANSIT, INC., 323 Bridge Street, P.O. Box 406, Winona, MN 55987. Representative: Thomas J. Benner, Suite 4959, One World Trade Center, New York, NY 10048. Transporting *such commodities* as are dealt in by retail department stores, (1) from points in GA, to points in AL, AR, FL, LA, OK, MS, NC, SC, TN, and TX, (2) from points in NJ, to points in AL, AR, FL, GA, LA, OK, MS, NC, SC, TN, and TX, and (3) from Laredo, TX, to points in AL, AR, FL, GA, LA, OK, MS, NC, SC, and TN, restricted in (1) and (2) above to the transportation of traffic originating at the facilities of S. H. Kress and Company in the named origin States and destined to the facilities of S. H. Kress and Company in the named destination States and in (3) above to the transportation of traffic originating at the named origin and destined to the facilities of S. H. Kress and Company in the named destination States. (Hearing site: New York.)

MC 118202 (Sub-119F), filed May 11, 1979. Applicant: SCHULTZ TRANSIT, INC., P.O. Box 406, Winona, MN 55987. Representative: Eugene A. Schultz (same address as applicant). Transporting *meats, meat products and meat byproducts, articles distributed by meat-packing houses, and such commodities as are used by meat packers in the conduct of their business when destined to and for use by meat packers*, as described in sections A, C, and D of Appendix I to the report in *Descriptions in Motor Carrier Certificates*, 61 M.C.C. 209 and 766 (except hides and commodities in bulk), between the facilities used by Lauridsen Foods, Inc., at or near Britt, IA, and Armour and Co., at Mason City, IA, on the one hand, and, on the other, those points in the United States in and east of ND, SD, NE, CO, OK, and TX, restricted to the transportation of traffic originating at or destined to the named facilities. (Hearing site: St. Paul, MN, or Washington, DC.)

MC 119702 (Sub-68F), filed May 17, 1979. Applicant: STABLY CARTAGE CO., a corporation, P.O. Box 466, Edwardsville, IL 62025. Representative: Ernest A. Brooks, II, 1301 Ambassador Bldg., St. Louis, MO 63101. Transporting *petroleum products*, in bulk, in tank vehicles, from the facilities of Mobil Oil Corporation, at or near Sauget, IL, to points in MO. (Hearing site: St. Louis, MO.)

MC 124673 (Sub-35F), filed May 14, 1979. Applicant: FEED TRANSPORTS, INC., Box 2167, Amarillo, TX 79105. Representative: Thomas F. Sedberry, 801 Vaughn, Building, Austin, TX 78701. Transporting (1) *animal feed ingredients* from Lubbock, TX, to points in AL, AR, AZ, GA, IA, KS, LA, MN, MS, MO, NE, NC, ND, OK, and TN, (2) *corn gluten meal*, in bulk, from Dimmitt, TX, to the facilities of Ralston Purina Company, at New Flagstaff, AZ, and (3) *meat and bone meal, bloodmeal, and dry rendered tankage*, between the facilities of Amarillo By-Products at or near Amarillo, TX, on the one hand, and, on the other, points in AR, CO, KS, LA, MO, NE, NM, and OK. (Hearing site: Amarillo, TX, or Dallas, TX.)

MC 125433 (Sub-264F), filed May 14, 1979. Applicant: F-B TRUCK LINE COMPANY, 1945 South Redwood Road, Salt Lake City, UT 84104. Representative: John B. Anderson (same address as applicant). Transporting (1) *alkaline etching solution*, (except commodities in bulk), from Orem, UT, and Los Angeles and San Francisco, CA, to points in the United States (except AK and HI), and (2) *recycled alkaline etching solution*, (except commodities in bulk), in the reverse direction. (Hearing site: Salt Lake City, UT, or San Francisco, CA.)

MC 127042 (Sub-268F), filed May 14, 1979. Applicant: HAGEN, INC., P.O. Box 98, Leeds Station, Sioux City, IA 51106. Representative: Robert G. Tessar (same address as applicant). Transporting *meats, meat products and meat byproducts, and articles distributed by meat-packing houses*, as described in Sections A and C of Appendix I to the report in *Descriptions in Motor Carrier Certificates*, 61 M.C.C. 209 and 766, (except hides and commodities in bulk), from St. Paul, MN, to points in CO. (Hearing site: St. Paul, MN.)

MC 134783 (Sub-47F) (correction), filed March 19, 1979, published in the Federal Register issue of July 19, 1979, and republished as corrected this issue. Applicant: DIRECT SERVICE, INC., 940 East 66th Street, P.O. Box 2491, Lubbock, TX 79408. Representative: Charles M. Williams, 350 Capitol Life Center, 1600 Sherman Street, Denver, CO 80203. Transporting (1)(a) *drugs, cosmetics, plastic boxes, weed killing compounds, and animal and poultry feed supplements*, and (b) *materials and supplies* used in the manufacture of the commodities in (1)(a) above (except commodities in bulk), and (c) *rejected and damaged shipments of the commodities named in (1)(a) and (b) above*, (except commodities in bulk), from the facilities of Eli Lilly and Company, at or near Clinton, lafayette, and Indianapolis, IN, to points in TX, and (2) *materials and supplies* used in the manufacture and distribution of the commodities named in (1) above, in the reverse direction. (Hearing site: Indianapolis, IN, or Lubbock, TX.) The purpose of this republication is to add section (1)(c) inadvertently omitted.

Note.—Dual operations may be involved.

MC 134922 (Sub-293F), filed May 17, 1979. Applicant: B. J. McADAMS, INC., Route 6, Box 15, North Little Rock, AR 72118. Representative: Bob McAdams (same address as a applicant). Transporting *liquid plastic, plastic film, plastic sheeting, chemicals, cleaning and scouring compounds, laminating machinery, parts for laminating machinery, and ink solvents*, (except commodities in bulk), between points in Orange County, CA, on the one hand, and, on the other, those points in the United States in and east of WI, IL, KY, TN, and MS. (Hearing site: Los Angeles or San Francisco, CA.)

MC 139353 (Sub-9F), filed May 9, 1979. Applicant: DAVIE TRUCKERS, INC., Route 1, Advance, NC 27006. Representative: W. P. Sandridge, Jr., 2400 Wachovia Building, P.O. Drawer; 84, Winston-Salem, NC 27102. To operate as a *contract carrier*, by motor vehicle, in interstate or foreign commerce, over irregular routes, transporting (1) *grain and waste yeast*, from the facilities of The Pillsbury Company in Dougherty, Worth, Lee, Terrell, Baker, Mitchell, Turner, and Sumter Counties, GA, to points in AL, FL, GA, LA, MS, NC, SC, and TN, and (2) *food by-products*, from the facilities of Frito-Lay at or near Charlotte, NC, to points in NC, SC, VA, and GA, under continuing contract(s) with The Pillsbury Company, of Minneapolis, MN. (Hearing Site: Winston-Salem, or Greensboro, NC.)

MC 139923 (Sub-61F), filed May 18, 1979. Applicant: MILLER TRUCKING CO., INC., P.O. Box Drawer "D", Stroud, OK 74079. Representative: Jack H. Blanshan, Suite 200, 205 West Touhy Avenue, Park Ridge, IL 60068. Transporting *soya products and by-products* (except commodities in bulk), from the facilities of Central Soya Company, Inc., at or near (a) Chicago, Gibson City, and Peoria, IL, (b) Decatur and Indianapolis, IN, (c) Belmond, IA, and (d) Bellevue, OH, to points in AZ, AR, CA, CO, ID, KS, LA, MO, MT, NV, NM, OK, OR, TX, UT, WA, and WY, restricted to the transportation of traffic originating at the named facilities. (Hearing site: Chicago, IL, or Washington, DC.)

Note.—Dual operations may be involved.

MC 140672 (Sub-3F), filed May 16, 1979. Applicant: MOSAIC TRUCKING COMPANY, a corporation, One Biondi Street, Clifford, NJ 07721. Representative: Michael R. Werner, 167 Fairfield Road, P.O. Box 1409, Fairfield, NJ 07006. Transporting *iron and steel articles*, between the facilities of U.S. Steel, at Fairless, PA, on the one hand, and, on the other, points in CT. (Hearing site: New York, NY.)

MC 141773 (Sub-11F), filed May 17, 1979. Applicant: THERMO TRANSPORT, INC., 156 East Market Street, Indianapolis, IN 46204. Representative: Donald W. Smith, P.O. Box 40248, Indianapolis. IN 46240. To operate as a *contract carrier*, by motor vehicle, in interstate or foreign commerce, over irregular routes, transporting *iron and steel articles*, from Indianapolis, IN, Youngstown, OH, Aliquippa, PA, and Franklin Park, IL, to the facilities of Carlton Company, Inc., at Portland, OR, under continuing contract(s) with Carlton Company, of Portland, OR. (Hearing site: Portland, OR.)

Note.—Dual operations may be involved.

MC 142663 (Sub-2F), filed May 18, 1979. Applicant: SPRINGBROOK TRANSPORT, INC., P.O. Box 422, Springfield, PA 19064. Representative: Theodore Polydoroff, Suite 301, 1307 Dolley Madison Boulevard, McLean, VA 22101. To operate as a *contract carrier*, by motor vehicle, in interstate or foreign commerce, over irregular routes, transporting *chocolate candy*, in vehicles equipped with mechanical refrigeration, from West Reading, PA, to points in the United States (except AK, AZ, CA, CO, HI, NV, NM, OR, TX, UT, and WA), under continuing contract(s) with R. M. Palmer Co., of West Reading, PA. (Hearing site: Philadelphia, PA.)

MC 143433 (Sub-9F), filed May 14, 1979. Applicant: B. L. GILBERT, d.b.a. GILBERT TRUCKING COMPANY, 310 South First Avenue, Stroud, OK 74049. Representative: Greg E. Summy, P.O. Box 1540, Edmond, OK 73034. Transporting (1) *carpeting, carpeting samples, and materials and accessories* used in the installation of carpeting, from points in AR and TX, to points in AZ, CA, CO, ID, NV, NM, OR, UT, and WA, and (2) *materials and supplies* used in the manufacture of carpeting, (a) from points in TX, to points in AR and OK, and (b) from points in CA and LA, to points in AR. (Hearing site: Oklahoma City, OK or Dallas, TX.)

MC 144222 (Sub-8F), filed May 17, 1979. Applicant: RONALD HACKENBERGER, d.b.a. RON's TRUCKING SERVICE, Route 3, Norwalk, OH 44857. Representative: Richard Brandon, P.O. Box 97, 220 West Bridge Street, Dublin, OH 43017. Transporting *roofing granules*, in bulk, from the facilities of 3-M Company, at Wausau, WI, to the facilities of CertainTeed Corporation, at or near (a) Avery, OH, and (b) Chicago Heights, IL. (Hearing site: Columbus, OH.)

MC 144363 (Sub-6F), (correction), filed January 19, 1979, published in the Federal Register, issue of March 29, 1979, and republished, as amended, this issue. Applicant: HIRSCHBACH MOTOR LINES, a corporation, 5000 South Lewis Boulevard, P.O. Box 417, Sioux City, IA 51102. Representative: George L. Hirschbach (same address as applicant). To operate as a *contract carrier*, by motor vehicle, in interstate or foreign commerce, over irregular routes, transporting *such commodities* as are dealt in or used by retail department stores (except foodstuffs, and commodities in bulk), between points in AL, AR, CA, FL, GA, IL, IA, KY, KS, MN, MS, MO, LA, NC, NE, NV, OR, SC, TN, TX, UT, and WA, under continuing contract(s) with Ardan Wholesale, Inc., of Des Moines, IA. The purpose of this republication is to correct the requested territorial description. (Hearing site: Des Moines, IA, or Minneapolis, MN.)

Note.—Dual operations are involved.

MC 144522 (Sub-5F), filed May 14, 1979. Applicant: PETERSEN & FOGO, INC., Box 484, Superior, NE 68978. Representative: Lavern R. Holdeman, 521 South 14th St., Suite 500, P.O. Box 81849, Lincoln, NE 68501. Transporting (1)(a) *grain drying, grain storage, grain handling, grain conditioning, and grain aeration equipment*, and (b) *parts and accessories* for the commodities in (1)(a) above, from the facilities of Superior Equipment Manufacturing Company, at or near Mattoon, IL, to points in AR, CA, ID, IA, LA, MN, MT, ND, NV, OR, SD, UT, WA, and WY, and (2) *materials, equipment, and supplies* used in the manufacture, sale, and distribution of the commodities in (1) above (except commodities in bulk), in the reverse direction, restricted in (1) and (2) above to the transportation of traffic originating at the named origins and destined to the indicated destinations. (Hearing site: Omaha, NE.)

MC 145513 (Sub-7F), filed May 16, 1979. Applicant: SERVICE TRANSPORTATION, INC., 125 North 6th Street, Payette, ID 83661. Representative: Timothy R. Stivers, P.O. Box 162, Boise, ID 83701. To operate as a *contract carrier*, by motor vehicle, in interstate or foreign commerce, over irregular routes, transporting *malt beverages and wine*, from points in CA, to the facilities of Superior Beverage, at or near Boise and Sun Valley, ID, under continuing contract(s) with Superior Beverage, of Boise, ID. (Hearing site: Boise, ID.)

MC 145752 (Sub-1F), filed May 16, 1979. Applicant: FRANK M. DANIELSEN, d.b.a. DANIELSEN TRUCKS AND TRACTORS, 26643 Whitehorn Drive, Palos Verdes, CA 90274. Representative: Frank M. Danielsen (same address as applicant). To operate as a *contract carrier*, by motor vehicle, in interstate or foreign commerce, over irregular routes, transporting (1) *lumber*, from Long Beach, CA, to points in Imperial, Los Angeles, Orange, Riverside, San Bernardino, San Diego, and Ventura Counties, CA, and the facilities of Weyerhaeuser Company, at Fresno, CA, under continuing contract(s) with Weyerhaeuser Company, of Long Beach, CA; and (2) *lumber*, (a) from Los Angeles and Long Beach, CA, to points in San Diego County, CA, and (b) from

San Diego, CA, to points in Imperial, Los Angeles, Orange, Riverside, San Bernardino, San Diego, and Ventura Counties, CA, under continuing contract(s) with Tri-County Lumber, Inc., of Oceanside, CA. (Hearing site: Los Angeles, CA.)

MC 145772 (Sub-6F), filed May 18, 1979. Applicant: LANG CARTAGE CORP., P.O. Box 1465, Waukesha, WI 53187. Representative: Richard C. Alexander, Suite 412 Empire Bldg., 710 N. Plankinton Avenue, Milwaukee, WI 53203. Transporting *such commodities* as are dealt in by retail mail order houses (except furniture), from the facilities of (1) Spiegel, Inc., at Chicago, IL, and (2) Lang Cartage Corp., at Waukesha and La Crosse, WI, to points in MN, WI, and the Upper Peninsula of MI. (Hearing site: Milwaukee, WI, or Chicago, IL.)

Note.—Dual operations may be involved.

MC 146502 (Sub-2F), filed May 17, 1979. Aplicant: DOUG'S MOBILE HOME TOWING, INC., Route 1, Box 554, Monroe, NC 28110. Representative: William P. Farthing, Jr., 1100 Cameron-Brown Bldg., Charlotte, NC 28204. Transporting (1) *trailers* designed to be drawn by passenger automobiles, and (2) *buildings*, complete or in sections, (a) from those points in NC west of U.S. Hwy 220 to points in PA, DE, MD, and KY, and (b) between those points in NC west of U.S. Hwy 220, on the one hand, and, on the other, points in WV, TN, SC, GA, AL, and VA. (Hearing site: Charlotte or Monroe, NC.)

MC 146953 (Sub-2F), filed May 16, 1979. Applicant: SOUTHWEST SALES, INC., P.O. Box 1686, Lawton, OK 73501. Representative: Rufus H. Lawson, 106 Bixler Bldg., 2400 Northwest 23rd Street, Oklahoma City, OK 73107. To operate as a *contract carrier*, by motor vehicle, in interstate or foreign commerce, over irregular routes, transporting *malt beverages*, from the facilities of Golden Distributing Co., at Wichita Falls, TX, to the facilities of Fort Sill Beverage Store, at Fort Sill Military Reservation, in Comanche County, OK, under continuing contract(s) with Golden Distributing Co., of Wichita Falls, TX. Conditions: (1) Applicant shall maintain separate accounts and records for its for-hire carrier operations as distinct from its other business activities, and (2) it shall not at the same time and in the same vehicle transport property both as a private carrier and as a for-hire carrier. (Hearing site: Oklahoma City, OK.)

MC 146673 (Sub-1F), filed May 14, 1979. Applicant: DENNIS JIMISON CONSTRUCTION CO., INC., Box 1154, Glendive, MT 59330. Representative: G. Todd Baugh, 805 Midland Bank Building, Billings, MT 59101. Transporting (1) *petroleum and petroleum products*, and (2) *equipment and supplies* used in the manufacture, refining and distribution of the commodities in (1) above, from Portland, OR and Wood River, IL, to points in MT. Conditions: (1) Applicant shall maintain separate accounts and records for its for-hire carrier operations as distinct from its other business activities, and (2) it shall not at the same time and in the same vehicle transport property both as a private carrier and as a for-hire carrier. (Hearing site: Billings, MT or Portland, OR.)

MC 146992 (Sub-2F), filed May 14, 1979. Applicant: PHIL-MART TRANSPORTATION, INC., P.O. Box 126, Braselton, GA 30517. Representative: William J. Boyd, 600 Enterprise Drive, Suite 222, Oak Brook, IL 60521. Transporting (1) *foodstuffs*, and (2) *cleaning, scouring and washing compounds, napkins, table cloths, dishes, cups, trays and eating utensils*, when transported in mixed loads with foodstuffs, from the facilities of Prime Packing Co., at or near Chicago, IL, to points in AL, AR, FL, GA, IN, KY, LA, MS, OH, TN, TX, and WV, restricted to the transportation of traffic originating at the named facilities. (Hearing site: Chicago, IL, or Washington, DC.)

MC 147092 (Sub-2F), filed May 17, 1979. Applicant: EMIL E. CHAMP, Route 3, Box 103, Junction City, KS 66441. Representative: Arthur J. Cerra, 2100 TenMain Center, P.O. Box 19251, Kansas City, MO 64141. Transporting *ice*, (1) between Junction City, KS, and Omaha, NE, and (2) from Omaha, NE, to Topeka and Wichita, KS. Conditions: (1) Applicant shall maintain separate accounts and records for his for-hire carrier operations as distinct from his other business activities, and (2) he shall not at the same time and in the same vehicle transport property both as a private carrier and a for-hire carrier. (Hearing site: Topeka, KS, or Kansas City, MO.)

MC 147232 (Sub-1F), filed May 16, 1979. Applicant: A. L. SMITH TRUCKING, INC., 8984 Murphy Road, Versailles, OH 45380. Representative: James Duvall, P.O. Box 97, 220 West Bridge Street, Dublin, OH 43017. Transporting *fertilizer and fertilizer products*, in bulk, between points in IN and OH. (Hearing site: Cleveland, OH.)

MC 147272 (Sub-1F), filed May 16, 1979. Applicant: GERALD L. ADDY, d.b.a. ADDY TRUCKING, Route 3, Newcomerstown, OH 43832. Representative: James Duvall, P.O. Box 97, 220 West Bridge Street, Dublin, OH 43017. Transporting (1) *aluminum dross*, in dump vehicles, from Gnadenhutton, OH, to the facilities of Apex International Alloys Corporation, at or near Bicknell, IN, and (2) *aluminum sows*, in the reverse direction. Condition: (1) Applicant shall maintain separate accounts and records for his for-hire carrier operations as distinct from his other business activities, and (2) he shall not at the same time and in the same vehicle transport property both as a private carrier and as a for-hire carrier. (Hearing site: Cleveland or Columbus, OH.)

MC 147422F, filed May 16, 1979. Applicant: JEFFREY M. KORNACKER, d.b.a. K TRANSPORT CO., 7726 Karen Lane, Gurnee, IL 60031. Representative: Albert A. Andrin, 180 North LaSalle Street, Chicago, IL 60601. Transporting *malt beverages*, (1) from points in WI, MO, MN, and NY, to points in IL and MI, and (2) from points in MI, GA, IN, and Trenton, NJ, to points in IL. (Hearing site: Chicago, IL.)

MC 4963 (Sub-67F), (corrected), filed April 26, 1979, published in the Federal Register, issue of August 23, 1979, and republished, as corrected, this issue. Applicant: JONES MOTOR CO., INC., Bridge Street and Schuylkill Road, Spring City, PA 19475. Representative: Roland Rice, Suite 501, Perpetual Building, 1111 E St. NW., Washington, DC 20004. To operate as a *common carrier*, by motor vehicle, in interstate or foreign commerce, over irregular routes, transporting *iron and steel articles and metal products*, (except commodities in bulk, and those requiring the use of special equipment), between points in PA, NY, OH, VA, WV, KY, IN, IL, MI, WI, and MD. (Hearing site: Pittsburgh, PA, or Washington, DC.) The purpose of this republication is to correct the commodity description.

[FR Doc. 79-31143 Filed 10-9-79; 8:45 am]
BILLING CODE 7035-01-M

[Emergency Service Order 1398; Supplemental Order No. 2]

Kansas City Terminal Railway Co.—Directed To Operate Over—Chicago, Rock Island & Pacific Railroad Co., Debtor (William M. Gibbons, Trustee)

Decided: October 3, 1979.

On September 26, 1979, the Interstate Commerce Commission, pursuant to 49 U.S.C. § 11125, directed the Kansas City Terminal Railway Company ("DRC") to provide service for traffic originating or terminating on the lines of the Chicago, Rock Island & Pacific Railroad Company, Debtor (William M. Gibbons,

Trustee) ("RI") [44 FR 56343, Oct. 1, 1979].

This supplemental order responds to various questions concerning interpretation of Emergency Service Order 1398 raised during the course of preparation to implement directed service.

The order is properly interpreted as requiring the DRC to assume the responsibilities for security and maintenance, including the making of lease payments, with respect to all properties of the Rock Island, including locomotives and freight cars, from the date of its entry upon the properties of the Rock Island until it is determined which properties cannot be used in providing directed service. Upon determining that specific properties cannot be used in directed service, the DRC shall simultaneously notify the Commission and the Trustee by hand delivery by providing a listing describing such properties and explaining why they cannot be used in providing directed service. Unless the Commission shall require otherwise, within five working days of its receipt by the Secretary of such a listing, responsibility for the security and maintenance, including the making of lease payments with respect to all property except locomotives and freight cars, shall revert to the Trustee at the time specified in such notice (not less than five days from the date of filing with the Commission and service upon the Trustee).

More specifically, with respect to property other than locomotives and rolling stock, DRC shall pay the Trustee a sum sufficient to permit the trustee to make current lease payments on all properties used to provide directed service for the period of directed service less any amounts due to the Trustee from others as rent for their use of properties used to provide directed service. When such property is returned to the custody of the Trustee after a lease payment has been made by the DRC, an adjustment shall be made to reflect the number of days such property was in the custody of DRC. No rent shall be paid to the Trustee for use of any property and facilities owned by the Rock Island other than rolling stock and locomotives.

With respect to rolling stock and locomotives, the DRC shall pay the Trustee a sum sufficient to make current lease payments on all such leased equipment for the period of directed service. As a precondition to this undertaking by the DRC, the Trustee shall agree with the DRC that lease payments attributable to equipment which is determined to be inoperable may be charged back to the Trustee as a claim against the estate or may be offset against payments due to the Trustee for the DRC's use of Rock Island-owned rolling stock and locomotives.

In addition, the DRC is authorized to pay directly to the lessor payments for leased locomotives and freight cars attributable to September 1979, but not paid by the Trustee. We find that the retention of them is essential to the DRC's ability adequately to provide directed service and that it can obtain the use of such equipment only by making such payment. As a precondition to making such payments, the DRC shall obtain an assignment of the lessor's claim against the estate in favor of the United States and agreement of the trustee that such amounts may be offset against payments due to the Trustee for the DRC's use of Rock Island-owned rolling stock and equipment. As a further precondition to the making of such payments, the Trustee shall agree to account for revenues earned as a result of operations during the month of September 1979.

The DRC is authorized and required to honor all outstanding agreements with shippers and states providing for repayment of monies advanced for car and track rehabilitation on a use basis covering property used by it to provide directed service during the period of directed service.

The DRC is also authorized and required to make payment to employees under the DSO in accordance with the interpretations set forth in the letter of October 1, 1979 signed by George M. Stafford as acting chairman. We find that use of such employees is required by law and that it would be impossible to obtain their services without making payments as described in that letter.

We find that all of the above expenditures, which the DRC is authorized and/or required to make, arise out of or are attributable to directed service under Emergency Service Order No. 1398 and as such are reimbursable to the DRC under 49 U.S.C. 11125(b)(5).

On page 18 of the Directed Service Order, we required the DRC to explain to the commission if it could not commence directed service within 7 days of that decision's effectiveness. The DRC has been reporting progress to us on a daily basis and that date is now modified to 12:01 a.m. October 6, 1979. The effective date for commencing operations in ordering paragraph 23 on page 43 is also modified accordingly.

By the Commission, Chairman O'Neal, Vice Chairman Stafford, Commissioners Gresham, Clapp, Christian, Trantum, Gaskins, and Alexis. Commissioner Gresham voted to reject the decision and will be submitted a separate expression.

Agatha L. Mergenovich,

Secretary.

[FR Doc. 79-31203 Filed 10-9-79; 8:45 am]

BILLING CODE 7035-01-M

[Ex Parte No. 311]

Decision; Expedited Procedures for Recovery of Fuel Costs

Decided: October 2, 1979.

In our decisions of September 11, 13 and 25, 1979, a 9.5-percent surcharge was authorized on all owner-operator traffic, and on all truckload-rated traffic whether or not owner-operators were employed. We ordered that all owner-operators were to receive compensation at this level. In addition, a 1.7-percent surcharge was authorized on less-than-truckload (LTL) traffic performed by carriers not utilizing owner-operators.

The weekly figures set forth in the appendix for transportation performed by owner-operators and for truckload-rated traffic is 9.7-percent, down 0.1-percent from last week. However, we are requiring that the surcharge for this traffic be held at 9.5-percent. In addition, no change will be made in the existing authorization of a 1.7-percent surcharge on LTL traffic performed by carriers not utilizing owner-operators.

Notice of this decision shall be given to the general public my mailing a copy of this decision to the Governor of each State and to the Public Utilities Commissions or Boards of each State having jurisdiction over transportation, by depositing a copy in the Office of the Secretary, Interstate Commerce Commission, Washington, D.C. for public inspection, and by delivering a copy to the Director, Office of the Federal Register for publication therein.

It is ordered: This decision shall become effective Friday at 12:01 a.m., October 5, 1979.

By the Commission. Chairman O'Neal, Vice Chairman Stafford, Commissioners Gresham, Clapp, Christian, Trantum, Gaskins and Alexis.

Agatha L. Mergenovich,

Secretary.

Appendix—Fuel Surcharge

Base Date and Price Per Gallon (Including Tax)

January 1, 1979 ..... 63.5¢

Date of Current Price Measurement and Price Per Gallon (Including Tax)

October 1, 1979 ..... [1] 99.9¢

Average Percent: Fuel Expenses (Including Taxes) of Total Revenue

(1) From Transportation Performed by Owner Operators (apply to all truckload rated traffic).....16.9%
(2) Other (including less-truckload traffic).....[2] 2.9%

Percent surcharge developed

(1).....9.7%
(2).....1.7%

Percent surcharge allowed

(1).....9.5%
(2).....1.7%

[1] One of the survey stations could not be reached and was included using the September 24, 1979 price.

[2] Additional data for general commodity carriers indicate the following:

(a) Percent Fuel (including tax) of revenue (all traffic), 7.3%.

(b) Percent T.L. and LTL Revenue of total revenue:

[Dollars in thousands]

	Revenue	Percent
T.L.	$3,451,661	32
LTL	7,427,232	68
Total	10,878,893	100

Utilizing the T.L. and LTL weighing factors and retaining the relationship of fuel to revenue for owner operators (also applied to T.L. rated traffic) and in total of 16.9 percent and 7.3 percent respectively, the comparable relationship for LTL is 2.9 percent. This figure should not be construed as an actual relationship but is developed as a method to adjust the LTL surcharge.

[FR Doc. 79-31204 Filed 10-9-79; 8:45 am]

BILLING CODE 7035-01-M

DEPARTMENT OF ENERGY

Economic Regulatory Administration

Coleman's Standard; Proposed Remedial Order

Pursuant to 10 CFR 205.192(c), the Economic Regulatory Administration (ERA) of the Department of Energy hereby gives notice of a Proposed Remedial Order which was issued to Coleman's Standard, 1415 Prospect, Kansas City, Missouri 64106. This Proposed Remedial Order charges Coleman's Standard with pricing violations in the amount of $141.68, in sales of the motor gasoline during the time period August 17, 1979 through August 19, 1979, in the State of Missouri.

A copy of the Proposed Remedial Order, with confidential information deleted, may be obtained from William D. Miller, District Manager of Enforcement, 324 East 11th Street, Kansas City, Missouri 64106. Within 15 days of publication of this notice, any aggrieved person may file a Notice of Objection with the Office of Hearings and Appeals, 2000 M Street, NW., Washington, D.C. 20461, in accordance with 10 CFR 205.193.

Issued in Kansas City, Missouri, on the 14th day of September 1979.

William D. Miller,

District Manager, Central Enforcement District.

[FR Doc. 79-31199 Filed 10-9-79; 8:45 am]

BILLING CODE 6450-01-M

Fuel Oil Marketing Advisory Committee, Forum on Refiner Credit Practices; Meeting

Pursuant to the provisions of the Federal Advisory Committee Act (Public Law 92-463, 86 Stat. 770), notice is hereby given that the Fuel Oil Marketing Advisory Committee will meet Monday, October 29, 1979, beginning at 11:00 a.m., at Department of Energy Regional Office, Region II, Rooms 305 A&C, 26 Federal Plaza, New York.

The Committee was established to provide the Secretary of Energy with expert and technical advice concerning the marketing of fuel oil as it relates to the development of Energy.

The meeting will serve as a forum for public comments on the impact of refiner credit practices on marketers and consumers of middle distillate fuels. The FOMAC is concerned that adjustments being made by many major suppliers and marketers in historic credit practices may have an adverse impact on the viability of fuel oil dealers and consumers of fuel oil. Accordingly, the Committee wishes to obtain input from refiners, wholesalers, retailers, consumers and state and local government officials so that it may provide advice and recommendations to the Department of Energy with respect to this issue.

The tentative agenda is as follows:

Monday, October 29, 1979

- Opening Remarks
- Forum for Public Comments on the Impact of Refiner and Market Credit Practices
- Other issues facing Home Heating Oil Dealers and Customers
- Remarks from the Public (10 minute rule)

The meeting is open to the public. The Chairperson of the Committee is empowered to conduct the meeting in a fashion that will in his judgment, facilitate the orderly conduct of business. Members of the public who wish to make oral statements should inform Georgia Hildreth, Director, Advisory Committee Management Office (202) 252-5187, at least 5 days prior to the meeting and reasonable provision will be made to include their presentation on the agenda. Any member of the public who wishes to file a written statement with the Committee will also be permitted to do so, either before or after the meeting.

Transcripts of the meeting will be available for public review at the Freedom of Information Public Reading Room, Room GA-152, Forrestal Building, 1000 Independence Avenue, S.W., Washington, D.C. between the hours of 8:00 a.m. and 4:30 p.m., Monday through Friday, except Federal holidays. Any person may purchase a copy of the transcript from the reporter.

Issued at Washington, D.C. on October 1, 1979.

Georgia M. Hildreth,

Director, Advisory Committee Management.

[FR Doc. 79-31143 Filed 10-9-79; 8:45 am]

BILLING CODE 6450-01-M

Herb's Union 76; Proposed Remedial Order

Pursuant to 10 CFR 205.192(c), the Economic Regulatory Administration (ERA) of the Department of Energy hereby gives notice of a Proposed Remedial Order which was issued to Herb's Union 76, 1618 Sheridan Road, Wilmette, Illinois 60091. This Proposed Remedial Order charges Herb's Union 76 with pricing violations in the amount of $643.41, in sales of the motor gasoline during the period August 1, 1979, through September 7, 1979, in the State of Illinois.

A copy of the Proposed Remedial Order, with confidential information deleted, may be obtained from William D. Miller, District Manager of Enforcement, 324 East 11th Street, Kansas City, Missouri 64106. Within 15 days of publication of this notice, any aggrieved person may file a Notice of Objection with the Office of Hearings and Appeals, 2000 M Street, N.W., Washington, D.C. 20461, in accordance with 10 CFR 205.193.

Issued in Kansas City, Missouri, on the 10th day of September 1979.

William D. Miller,

District Manager, Central Enforcement District.

[FR Doc. 79-31145 Filed 10-9-79; 8:45 am]

BILLING CODE 6450-01-M

Jim's Marathon; Proposed Remedial Order

Pursuant to 10 CFR 205.192(c), the Economic Regulatory Administration (ERA) of the Department of Energy hereby gives notice of a Proposed

Remedial Order which was issued to Jim's Marathon, 1295 Rand Road, Palatine, Illinois 60067. This Proposed Remedial Order charges Jim's Marathon with pricing violations in the amount of $392.00, in sales of the motor gasoline during the time period August 15, 1979, through September 14, 1979, in the State of Illinois.

A copy of the Proposed Remedial Order, with confidential information deleted, may be obtained from William D. Miller, District Manager of Enforcement, 324 East 11th Street, Kansas City, Missouri 64106. Within 15 days of publication of this notice, any aggrieved person may file a Notice of Objection with the Office of Hearings and Appeals, 2000 M Street, NW., Washington, D.C. 20461, in accordance with 10 CFR 205.193.

Issued in Kansas City, Missouri, on the 21st day of September 1979.

William D. Miller,

District Manager, Central Enforcement District.

[FR Doc. 79-31140 Filed 10-9-79; 8:45 am]

BILLING CODE 6450-01-M

Palatine 76 Service; Proposed Remedial Order

Pursuant to 10 CFR 205.192(c), the Economic Regulatory Administration (ERA) of the Department of Energy hereby gives notice of a Proposed Remedial Order which was issued to Palatine 76 Service, Palatine and Quentin Roads, Palatine, Illinois. This Proposed Remedial Order charges Palatine 76 Service with pricing violations in the amount of $81.40, in sales of the motor gasoline during the time period August 1, 1979, through August 1, 1979, in the State of Illinois.

A copy of the Proposed Remedial Order, with confidential information deleted, may be obtained from William D. Miller, District Manager of Enforcement, 324 East 11th Street, Kansas City, Missouri 64106. Within 15 days of publicaton of this notice, any aggrieved person may file a Notice of Objection with the Office of Hearings and Appeals, 2000 M Street, NW., Washington, D.C. 20461, in accordance with 10 CFR 205.193.

Issued in Kansas City, Missouri, on the 17th day of September 1979.

William D. Miller,

District Manager, Central Enforcement District.

[FR Doc. 79-31144 Filed 10-9-79; 8:45 am]

BILLING CODE 6450-01-M

Stephen's Standard; Proposed Remedial Order

Pursuant to 10 CFR 205.192(c), the Economic Regulatory Administration (ERA) of the Department of Energy hereby gives notice of a Proposed Remedial Order which was issued to Stephen's Standard, 4601 Troost, Kansas City, Missouri. This Proposed Remedial Order charges Stephen's Standard with pricing violations in the amount of $79.02, in sales of the motor gasoline during the time period August 1, 1979 through August 31, 1979, in the State of Missouri.

A copy of the Proposed Remedial Order, with confidential information deleted, may be obtained from William D. Miller, District Manager of Enforcement, 324 East 11th Street, Kansas City, Missouri 64106. Within 15 days of publication of this notice, any aggrieved person may file a Notice of Objection with the Office of Hearings and Appeals, 2000 M Street, NW., Washington, D.C. 20461, in accordance with 10 CFR 205.193.

Issued in Kansas City, Missouri, on the 13th day of September 1979.

William D. Miller,

District Manager, Central Enforcement District.

[FR Doc. 79-31198 Filed 10-9-79; 8:45 am]

BILLING CODE 6450-01-M

[ERA Docket No. 79-CERT-095]

Phelps Dodge Corp.; Application for Certification of the Use of Natural Gas To Displace Fuel Oil

Take notice that on September 21, 1979, Phelps Dodge Corporation (Phelps Dodge), 32 North Stone, Suite 607, Tucson, Arizona 85701, filed an application for certification of an eligible use of natural gas to displace fuel oil at its Tyrone Branch, Tyrone, New Mexico; New Cornelia Branch, Ajo, Arizona; Copper Queen Branch, Bisbee, Arizona; Morenci Branch, Morenci, Arizona; and Douglas Reduction Works, Douglas, Arizona, pursuant to 10 CFR Part 595 (44 FR 47920, August 16, 1979), all as more fully set forth in the application on file with the Economic Regulatory Administration (ERA) and open to public inspection at the ERA, Docket Room 4126-A, 2000 M Street, NW., Washington, D.C. 20461, from 8:30 a.m.—4:30 p.m., Monday through Friday, except Federal holidays.

In its application, Phelps Dodge states that the volume of natural gas for which it request certification is 3.107 Bcf per year. The eligible seller is Lovelady, Inc., P.O. Drawer 2666, Midland, Texas 79702. This natural gas is estimated to displace the use of 322,941 barrels of No. 2 fuel oil (0.36% sulfur) per year at the Tyrone Branch, 121,533 barrels of No. 2 fuel oil (0.40% sulfur) per year at the New Cornelia Branch, 27,531 barrels of No. 2 fuel oil (0.20% sulfur) per year at the Copper Queen Branch, 33,133 barrels of No. 6 fuel oil (1.5% sulfur) per year at the Morenci Branch, and 51,560 barrels of No. 6 fuel oil (1.2% sulfur) per year at the Douglas Reduction Works. The gas will be transported by the El Paso Natural Gas Company, P.O. Box 1492, El Paso, Texas 79978, the Seagull Pipeline Corporation, 1800 Capital National Bank Building, 1300 Main Street, Houston, Texas 77002, the Houston Pipeline Corporation, P.O. Box 1188, Houston, Texas 77001, and the Oasis Pipe Line Company, P.O. Box 1188, Houston, Texas 77001.

In order to provide the public with as much opportunity to participate in this proceeding as is practicable under the circumstances, we are inviting any person wishing to comment concerning this application to submit comments in writing to the Economic Regulatory Administration, Room 4126-A, 2000 M Street, NW., Washington, D.C. 20461, Attention: Mr. Finn K. Neilsen, on or before October 22, 1979.

An opportunity to make an oral presentation of data, views, and arguments either against or in support of this application may be requested by any interested person in writing within the ten (10) day comment period. The request should state the person's interest, and, if appropriate, why the person is a proper representative of a group or class of persons that has such an interest. The request should include a summary of the proposed oral presentation and a statement as to why an oral presentation is necessary. If ERA determines an oral presentation is required, further notice will be given to Phelps Dodge and any persons filing comments, and published in the Federal Register.

Issued in Washington, D.C., on October 3, 1979.

Doris J. Dewton,

Assistant Administrator, Office of Petroleum Operations, Economic Regulatory Administration.

[FR Doc. 79-31305 Filed 10-9-79; 8:45 am]

BILLING CODE 6450-01-M

Federal Energy Regulatory Commission

Advisory Committee on Revision of Rules of Practice and Procedure, Subcommittee on Review of Commission Decisional Process; Meeting

October 4, 1979.

Pursuant to the provisions of the Federal Advisory Committee Act (Pub. L. 92-463, 86 Stat. 770), notice is hereby given that the Subcommittee on Review of the Commission Decisional Process of the Advisory Committee on Revision of rules of practice and procedure will meet Tuesday, October 23, 1979, from 11 a.m. to 5 p.m., at the Federal Energy Regulatory Commission, North Building, 825 North Capitol Street, NE., Room 3200, Washington, D.C.

The purpose of the meeting is to organize the Subcommittee's work on the hydroelectric and natural gas matters, distribute assignments, and set target dates for progress reports.

The meeting is open to the public. A transcript of the meeting will be available for public review and copying at FERC's Division of Public Information, Room 1000, 825 North Capitol Street, NE., between the hours of 8:30 a.m. and 5 p.m., Monday through Friday except Federal holidays. In addition, any person may purchase a copy of the transcript from the reporter.

Kenneth F. Plumb,

Secretary.

[FR Doc. 79-31197 Filed 10-9-79; 8:45 am]

BILLING CODE 6450-01-M

[Docket No. SA79-29]

Arkansas Louisiana Gas Co; Application for Adjustment and Interim Relief

October 4, 1979.

Take notice that on September 18, 1979, Arkansas Louisiana Gas Company (Arkla), P.O. Box 21734, Shreveport, Louisiana 71151, filed in Docket No. SA79-29 an application pursuant to § 1.41 of the Commission's rules of practice and procedure (18 CFR 1.41) for an adjustment exempting Arkla from the application of the requirements of Order No. 29 issued May 2, 1979, in Docket No. RM79-15 to Arkla's curtailment plan or modifying such requirements as they apply to Arkla's curtailment plan, all as more fully set forth in the application which is on file with the Commission and open to public inspection.

Arkla states that changes between the pre-order 29 priorities and the proposed new priorities are minimal, with such changes being as follows:

(1) Priority 1.2 is substantially the same as the Pre-Order 29 Priority 2.1 except that "feedstock and process needs" dropped out and a general reference has been included to cover uses whose curtailment would endanger life, health or maintenance of physical property.

(2) Priority 2.1 provided special preferential treatment for essential agricultural uses which cannot use an alternate fuel to place them above all except "high priority users."

(3) Priority 2.2 covers essential industrial process and feedstock uses which cannot use an alternate fuel, and particular uses will be assigned to this priority as and when they are appropriately certified in the implementation of section 402 of the NGPA.

(4) Priority 2.3 is necessary in order to provide a priority level for other feedstock and process needs and pipeline customer storage injection requirements.

(5) Priority 3 is slightly modified in order to provide a priority level for industrial requirements not covered elsewhere.

In support of the subject application, Arkla states the following:

(1) A system of curtailment priorities must apply to "long-term" and "short-term" gas shortage situations:

(a) A "long-term" curtailment situation occurs when there is not enough gas on a particular system to supply the *annual* requirements of all users in a particular priority. Under this circumstance all the users in the priority may be curtailed 100 percent throughout the 365-day year, or the users in that priority may be seasonally curtailed 100 percent part of the year (typically the months of November, December, January, February and March and receive part or all of their requirements the rest of the year.

(b) A "short-term" curtailment situation occurs when curtailments may be necessary from day to day, or even from hour to hour, or may have to continue for several days, or for two or three weeks, or even a couple of months during severely cold weather.

(2) Unless the entire purpose of a "priority" system of regulating available gas usage is to be frustrated, a system of priorities must be practicably workable and enforceable at the point where the ultimate user consumes the gas. It is not enough that the priority system provide some percentage number to use at some sale for resale point remote from the thousands of points where the gas will be consumed. For a system of priorities to work at the burner tip, it is absolutely essential that the gas company be able to order and implement large-volume curtailments of gas quickly in order to divert those volumes to where the gas is needed. This requires that the gas company be able to call on the relatively few large consumers to curtail before having to try to deliver and enforce curtailment orders to thousands of small consumers (from whom enough gas could not be made available anyway even if the logistics of communicating curtailment orders could be accomplished in time to do any good).

Arkla states that it has been implementing a single, coordinated curtainment plan all the way to the burner tip throughout its 5-state service area. To modify the pre-Order 29 Arkla plan to conform it to the requirements of Sections 401 (essential agricultural use) and 402 (essential industrial process and feedstock use) of the NGPA and still have viable standards for allocating available gas supply which can be administered, Arkla proposes the following curtailment priorities:

Priority 1.1 Residential; all small commercial requirements of less than 50 Mcf per peak day.

Priority 1.2 All other commercial requirements (including schools, hospitals, and similar institutions), plant protection, small industrials with total requirements of up to 300 Mcf per day, and other uses the curtailment of which the Secretary of Energy or FERC determines would endanger life, health, or maintenance of physical property.

Priority 2.1 [1] Essential agricultural uses as defined in section 401 of the Natural Gas Policy Act of 1978 which cannot use an alternate fuel.

Priority 2.2 [1] Essential industrial process and feedstock uses as defined in section 402 of the Natural Gas Policy Act of 1978 which cannot use an alternate fuel.

Priority 2.3 [1] Other feedstock and process needs and pipeline customer storage injection requirements.

Priority 3 Industrial requirements not covered elsewhere.

Priority 4 Industrial requirements for boiler fuel use of more than 300 Mcf per day but not more than 1,500 Mcf per day.

Priority 5 Industrial requirements for boiler fuel use of more than 1,500 but not more than 3,000 Mcf per day.

Priority 6 Industrial requirements for boiler fuel use of more than 3,000 Mcf per day.

In implementing certain of the above curtailment priorities, customers

[1] When it is necessary to curtail loads in each of these priorities, the large requirements that normally use more than 3,000 Mcf per day will be curtailed before the smaller loads.

normally using more than 3,000 Mcf of gas per day would be curtailed before smaller loads in that particular priority. Arkla states that the relatively few customers in the more than 3,000 Mcf per day category can be reached quickly with a few telephone calls and provide the only readily available large volume block of gas that can be called on expeditiously under these circumstances for the benefit of the total system, because all other large industrial loads would already be off.

Further, Arkla states that it is of vital importance in the part of the country where Arkla serves customers with natural gas that gas service to commercial establishments using 50 Mcf of gas or more on a peak day be accorded a relatively high priority in any curtailment plan. Accordingly, Arkla submits, that in the interest of protecting life, health and maintenance of physical property, giving due regard to the practical logistical problems of ordering and enforcing curtailment of gas usage by such customers, and also considering what a relatively small volume of additional gas would be made available from curtailing such gas anyway, commercial service to customers using 50 Mcf of gas or more per day should be "high priority users" in a 1.2 priority.

Arkla states that it also serves approximately 1700 "small industrial customers" on its system. As a group each of these customers averages only 25 Mcf of gas a day, with none using more than 300 Mcf a day. Arkla urges that such small industrial users also be considered high priority users because the logistics of trying to curtail all of them 100 percent before getting to the large essential agricultural users would be such as to also endanger life, health or maintenance of physical property and cause special hardships, not only in their own operations but more importantly within residential neighborhoods. It is asserted that there are a great many such establishments and that to require that they all be curtailed 100 percent before (and so long as) any "essential agricultural uses" are curtailed would have an impact on communities of people all out of proportion to whatever benefit might result from having those relatively small volumes of gas available for priority consumption in the "essential agricultural uses".

Arkla indicates that in its original submission of an amended curtailment plan last June 18, 1979, which was rejected, Arkla prioritized the boiler fuel loads of essential agricultural users as boiler fuel and not as essential agricultural use because the long experience that Arkla and these customers have had has demonstrated that the use of an alternate fuel under their boilers is certainly feasible, just as alternate fuel can be used under any other boilers. Arkla would still urge the Commission to use the data and information already available and make the appropriate alternate fuel determinations in the same order that otherwise grants the relief request by the instant application.

Additionally, Arkla alleges that Order No. 29 assumes that a Data Verification Committee is essential for the implementation of a curtailment plan, but it is submitted that this is not correct, as demonstrated by the fact that the Arkla system has functioned satisfactorily without such a Committee for almost 8 years, Arkla urges that a Data Verification Committee not be required in connection with the administration of the Arkla curtailment plan.

If there is any possibility that the relief requested would not be forthcoming in time for the proposed curtailment plan to be implemented by December 1, 1979, Arkla requests interim relief under § 1.41(m) of the Commission's Rules of Practice and Procedure, and any other law or regulation under which interim relief can be granted, to the end that the proposed curtailment plan can in fact be implemented on the Arkla system next winter and the necessity for curtailing approximately 2,000 relatively small gas customers can be avoided.

It should be noted that the tariff sheets submitted with the application are considered to be *pro forma* and that their submittal with the application is not to be considered in lieu of the filing requirements of section 4 of the Natural Gas Act.

The procedures applicable to the conduct of this adjustment proceeding are found in § 1.41 of the Commission's rules of practice and procedure, Order No. 24 issued March 22, 1979.

Any person desiring to participate in this adjustment proceeding shall file a petition to intervene in accordance with the provisions of § 1.41. All petitions to intervene must be filed on or before October 25, 1979.

Kenneth F. Plumb,

Secretary.

[FR Doc. 79-31195 Filed 10-9-79; 8:45 am]

BILLING CODE 6450-01-M

[Docket No. CP79-460]

Columbia Gas Transmission Corp.; Application

October 1, 1979.

Take notice that on August 29, 1979, Columbia Gas Transmission Corporation (Columbia), 1700 MacCorkle Avenue SE., Charleston, West Virginia 25314, filed in Docket No. CP79-460 an application pursuant to Section 7(c) of the Natural Gas Act for a certificate of public convenience and necessity authorizing the revision of service agreements with Lynchburg Gas Company (Lynchburg), Orange & Rockland Utilities, Inc. (Orange & Rockland) and UGI Corporation (UGI), all as more fully set forth in the application which is on file with the Commission and open to public inspection.

Columbia specifically requests authorization for the following:

1. A revised service agreement with Lynchburg, dated May 10, 1979, effectuating an increase in Lynchburg's contract demand from 10,400 dekatherms equivalent of gas per day to 12,200 dekatherms equivalent of gas per day in Columbia's Rate Zone 2. The increase in contract demand is permitted by Section 12.2(a) of the General Terms and Conditions of Columbia's FERC Gas Tariff, Original Volume No. 1.

2. A revised service agreement with Orange & Rockland, dated May 10, 1979, effectuating an increase in Orange & Rockland's contract demand from 35,000 Mcf per day to 42,100 dekatherms equivalent of gas per day (41,700 Mcf per day) in Columbia's Rate Zone 7. The increase in contract demand is permitted by Section 12.2(a) of the General Terms and Conditions of Columbia's FERC Gas Tariff, Original Volume No. 1.

3. A revised service agreement with UGI dated May 10, 1979, effectuating agreement an increase in UGI's maximum daily quantity from 50,000 Mcf per day to 58,700 dekatherms equivalent of gas per dayl (58,000 Mcf per day) and a decrease in winter contract quantity from 2,906,300 Mcf to 2,935,000 dekatherms equivalent of gas (2,900,000 Mcf) in Columbia's Rate Zone 6. The increase in maximum daily quantity is permitted by Section 13.2(a) and the decrease in winter contract quantity is permitted by Section 13.2(b) of the General Terms and Conditions of Columbia's FERC Gas Tariff, Original Volume No. 1. UGI has requested increased maximum daily quantity for fewer days under its winter service contract.

National Gas and Oil Corporation (National) has requested Columbia to deliver a portion of National's maximum daily obligation at an existing point of delivery from Columbia to National, located in Millwood Township, Guernsey County, Ohio. This point of delivery was authorized in Docket No. CP78-271 and under the authorization granted therein, Columbia is presently transporting and delivering volumes of exchange gas to National.

The Service agreement between Columbia and National increases National's maximum daily obligation under Rate Schedule SGS from 300 Mcf per day to 370 Mcf per day in Columbia's Rate Zone 4. Columbia does not request authorization for this increase herein inasmuch as it was granted by the order issued January 6, 1971, in Docket No. CP71-82. National was included among the 18 customers with total daily entitlements under 5,000 Mcf for an authorized total delivery of 25,000 Mcf of maximum daily firm deliveries, in the aforementioned order. The increase for National as described above can be served from the currently authorized total delivery of 25,000 Mcf.

Any person desiring to be heard or to make any protest with reference to said application should on or before October 10, 1979, file with the Federal Energy regulatory Commission, Washington, D.C. 20426, a petition to intervene or a protest in accordance with the requirements of the Commission's rules of practice and procedure (18 CFR 1.8 or 1.10) and the regulations under the Natural Gas Act (18 CFR 157.10). All protests filed with the Commission will be considered by it in determining the appropriate action to be taken but will not serve to make the protestants parties to the proceeding. Any person wishing to become a party to a proceeding or to participate as a party in any hearing therein must file a petition to intervene in accordance with the Commission's rules.

Take further notice that, pursuant to the authority contained in and subject to jurisdiction conferred upon the Federal Energy Regulatory Commission by Sections 7 and 15 of the Natural Gas Act and the Commission's rules of practice and procedure, a hearing will be held without further notice before the Commission or it designee on this application if no petition to intevene is filed within the time required herein, if the Commission on its own review of the matter finds that a grant of the certificate is required by the public convenience and necessity. If a petition for leave to intervene is timely filed, or if the Commission on its own motion believes that a formal hearing is required, further notice of such hearing will be duly given.

Under the procedure herein provided for, unless otherwise advised, it will be unnecessary for Applicant to appear or be represented at the hearing.

Kenneth F. Plumb,

Secretay.

[FR Doc. 79-31179 Filed 10-9-79; 8:45 am]

BILLING CODE 6450-01-M

[Docket No. CP79-472]

Florida Gas Transmission Co.; Application

October 1, 1979.

Take notice that on September 3, 1979, Florida Gas Transmission Company (Applicant), P.O. Box 44, Winter Park, Florida 32790, filed in Docket No. CP79-472 an application pursuant to Section 7(c) of the Natural Gas Act for a certificate of public convenience and necessity authorizing the transportation of certain volumes of natural gas for Southern Natural Gas Company (Southern) and authorizing the construction and operation of certain facilities necessary to receive the gas for Southern's account, all as more fully set forth in the application on file with the Commission and open to public inspection.

Pursuant to a transportation agreement dated August 2, 1979, between Applicant and Southern, Applicant proposes to transport for Southern up to 10 billion Btu's equivalent of natural gas, or such greater or lesser volumes as Applicant may accept from time-to-time depending upon the operating and transmission conditions of its pipeline facilities and its own capacity requirements, from a new point of delivery proposed to be constructed on Applicant's mainline in Hidalgo County, Texas, to an existing authorized interconnection of Applicant's and Southern's facilities near Franklinton, Washington Parish, Louisiana. In order for Applicant to receive the volumes of gas which it proposes to transport hereunder, Applicant proposes to construct and operate necessary facilities to receive and measure the gas at the proposed new delivery point in Hidalgo County. The total cost of construction of such facilities is estimated to be $27,730, which cost Southern would reimburse Applicant, it is stated.

Applicant indicates that it would charge Southern a transportation charge of 11.4 cents per million Btu's redelivered at the point of redelivery or a minimum charge of $500 per month, which transportation rate is composed of a facility charge (10.3 cents per million Btu's) and a service charge (11.1 cents per million Btu's). Applicant states that it would retain 2.5 percent of the gas which it proposes to deliver to Southern to offset compressor fuel, unaccounted for losses, etc. that are attributable to the service proposed herein, as well as Southern's *pro rata* share of any gas that may be vented from Applicant's facilities utilized in rendering the proposed service.

Applicant asserts that the proposed transportation would aid Southern in maintaining, to the extent possible, adequate and reliable natural gas service.

Any person desiring to be heard or to make any protest with reference to said application should on or before October 22, 1979, file with the Federal Energy Regulatory Commission, Washington, D.C. 20426, a petition to intervene or a protest in accordance with the requirements of the Commission's rules of practice and procedure (18 CFR 1.8 or 1.10) and the regulations under the Natural Gas Act (18 CFR 157.10). All protests filed with the Commission will be considered by it in determining the appropriate action to be taken but will not serve to make the protestants parties to the proceeding. Any person wishing to become a party to a proceeding or to participate as a party in any hearing therein must file a petition to intervene in accordance with the Commission's Rules.

Take further notice that, pursuant to the authority contained in and subject to jurisdiction conferred upon the Federal Energy Regulatory Commission by Section 7 and 15 of the Natural Gas Act and the Commission's rules of practice and procedure, a hearing will be held without further notice before the Commission or its designee on this application if no petition to intervene is filed within the time required herein, if the Commission on its own review of the matter finds that a grant of the certificate is required by the public convenience and necessity. If a petition for leave to intervene is timely filed, or if the Commission on its own motion believes that a formal hearing is required, further notice of such hearing will be duly given.

Under the procedure herein provided for, unless otherwise advised, it will be unnecessary for Applicant to appear or be represented at the hearing.

Kenneth F. Plumb,

Secretary.

[FR Doc. 79-31180 Filed 10-9-79; 8:45 am]

BILLING CODE 6450-01-M

[Docket No. CP79-471]

Florida Gas Transmission Co.; Application

October 1, 1979.

Take notice that on September 5, 1979, Florida Gas Transmission Company (Florida Gas), P.O. Box 44, Winter Park, Florida 32790, filed in Docket No. CP79-471 an application pursuant to Section 7(c) of the Natural Gas Act for a certificate of public convenience and necessity authorizing the transportation of certain quantities of natural gas for Natural Gas Pipeline Company of America (Natural), all as more fully set forth in the application on file with the Commission and open to public inspection.

Pursuant to a transportation agreement dated March 1, 1979, between Florida Gas and Natural, Florida Gas proposes to transport up to 3 billion Btu's equivalent of natural gas per day, or a greater or less quantity of gas as Florida Gas may accept from time-to-time depending upon operating and transmission conditions of its pipeline facilities and its own capacity requirements, from a proposed point of receipt on Florida Gas' existing Mustang Island lateral in Nueces County, Texas, to a proposed point of interconnection between Florida Gas' and Natural's facilities in Matagorda County, Texas. Florida Gas states that in order to render the instant service both parties would need to provide connections to theier existing facilities and to install certain new facilities. Florida Gas indicates that Natural would reimburse it for all expenses it incurred in providing such connection and installing such new facilities, including tapping on Florida Gas' pipeline, gas lost in making such taps, cost of valves and other necessary appurtenances, and the cost of installing the measuring equipment, which cost is estimated to be $34,000.

Florida would charge Natural a transportation charge of 11.5 cents for each million Btu's of the redelivery quantity delivered at the point of redelivery or a minimum charge of $500 per month, which transportation rate is composed of a facility charge (8.6 cents per million Btu's redelivered at the point of redelivery) and a service charge (2.9 cents per million Btu's redelivered at the point of redelivery), it is stated.

It is asserted that the proposed transportation would aid Natural in maintaining, to the extent possible, adequate and reliable natural gas service.

Any person desiring to be heard or to make any protest with reference to said application should on or before October 22, 1979, file with the Federal Energy Regulatory Commission, Washington, D.C. 20426, a petition to intervene or a protest in accordance with the requirements of the Commission's rules of practice and procedure (18 CFR 1.8 or 1.10) and the regulations under the Natural Gas Act (18 CFR 157.10). All protests filed with the Commission will be considered by it in determining the appropriate action to be taken but will not serve to make the protestants parties to the proceeding. Any person wishing to become a party to a proceeding or to participate as a party in any hearing therein must file a petition to intervene in accordance with the Commission's rules.

Take further notice that, pursuant to the authority contained in and subject to jurisdiction conferred upon the Federal Energy Regulatory Commission by Sections 7 and 15 of the Natural Gas Act and the Commission's rules of practice and procedure, a hearing will be held without further notice before the Commission or its designee on this application if no petition to intervene is filed within the time required herein, if the Commission on its own review of the matter finds that a grant of the certificate is required by the public convenience and necessity. If a petition for leave to intervene is timely filed, of if the Commission on its own motion believes that a formal hearing is required, further notice of such hearing will be duly given.

Under the procedure herein provided for, unless otherwise advised, it will be unnecessary for Applicant to appear or be represented at the hearing.

Kenneth F. Plumb,

Secretary.

[FR Doc. 79-31181 Filed 10-9-79; 8:45 am]

BILLING CODE 6450-01-M

[Docket No. RP75-79]

Lehigh Portland Cement Co., and Florida Gas Transmission Co.; Extension of Time

September 26, 1979.

On September 18, 1979, Southern Gas Company and Commission Staff Counsel filed respective motions with the Commission for an extension of time to file Briefs on Exceptions to the Initial Decision issued August 29, 1979 in the above-referenced proceeding. On September 19, 1979, Florida Cities filed a motion for an extension of time to submit Briefs Opposing Exceptions in the subject proceeding. The motion of Southern Gas Company states that additional time is needed to file Briefs on Exceptions because of delay in the Company's receipt of the Initial Decision. In support of their motion, Commission Staff Counsel states that an extension is needed because of conflicting assignments. Both motion state that the active parties contacted have no objection to the requests.

In their motion to extend the time for filing opposing briefs, Florida Cities states that it anticipates that a large number of Briefs on Exceptions will be filed in response to the Initial Decision and requests that the date for filing Briefs Opposing Exceptions be extended to 40 days beyond the date for filing Briefs on Exceptions. The motion is premature and is therefore denied.

Upon consideration, notice is hereby given in the above-referenced proceeding that Briefs on Exceptions are due October 8, 1979. Briefs Opposing Exceptions are due on October 29, 1979.

Lois D. Cashell,

Acting Secretary.

[FR Doc. 79-31182 Filed 10-9-79; 8:45 am]

BILLING CODE 6450-01-M

[Docket No. CP79-457]

Mississippi River Transmission Corp.; Application

October 1, 1979.

Take notice that on August 27, 1979, Mississippi River Transmission Corporation (Applicant), 9900 Clayton Road, St. Louis, Missouri, 63124, filed in Docket No. CP79-457 an application pursuant to Section 7 of the Natural Gas Act for a certificate of public convenience and necessity authorizing Applicant to sell volumes of natural gas to Laclede Gas Company (Laclede), Panhandle Eastern Pipe Line Company (Panhandle) and Kansas-Nebraska Natural Gas Company, Inc. (K-N) and authorizing the acquisition and operation of certain facilities located in or adjacent to the North Reydon Field area, Roger Mills County, Oklahoma and Hemphill County, Texas, all as more fully set forth in the application which is on file with the Commission and open to public inspection.

Applicant requests authorization to sell natural gas to Laclede in accordance with a winter service contract dated April 16, 1979; to sell gas to Panhandle pursuant to a transportation and sales agreement dated April 16, 1979; to sell gas to K-N pursuant to a transporation and purchase agreement dated April 16, 1979; and to the extent authorization is necessary, to purchase certain gathering facilities which have been or will be constructed by Laclede to connect wells in the North Reydon Field from which

Applicant would be purchasing natural gas.

The service to be provided in accordance with the Winter Service Contract involves gas to be produced from Laclede's interests, interests committed to Laclede by other producers and interests which may be committed to Applicant in the future in the North Reydon Field area, Roger Mills County, Oklahoma and Hemphill County, Texas.

Laclede is currently selling the gas which is available to it from its own interests and by purchase from others to Panhandle pursuant to a limited term gas pruchase and sales agreement dated September 1, 1978. The agreement provides for a minimum term for the sale of one year from the date of first delivery and from month to month thereafter to a maximum term of two years. Deliveries thereunder commenced on March 29, 1979.

Laclede desires to use a portion of the North Reydon Field area production for its own system uses and has, accordingly, requested Applicant to provide it with a new winter service related to such production. Applicant has agreed to provide this new service to Laclede under the conditions and in accordance with the provisions of the winter service contract. It is stated that the limited-term sale to Panhandle was specifically designed to permit Laclede to protect its rights to North Reydon Field area gas so that such gas would be available for long-term commitment to the proposed winter service contract arrangement.

The winter service contract generally provides that Applicant would resell to Laclede a portion of the gas from the North Reydon Field producing area which Laclede has sold to Applicant or which Applicant has purchased from others. Of the total volumes purchased by Applicant, as adjusted to reflect volume reductions attributable to gathering system losses and to two field transportation and sale arrangements entered into by Applicant, Applicant would essentially resell 50 percent to Laclede and retain 50 percent to agument its own system supply. Gas which is involved in this arrangement is designated "Covered Production" under the winter service contract, and includes specified North Reydon areas production, whether purchased by Applicant from Laclede or other producers.

To enable Applicant to utilize this North Reydon area production for the purpose of rendering the subject winter service to Laclede and also for its own system uses, Applciant has made arrangements with others to provide for the transportation of such gas to its system.

Pursuant to the terms and conditions of a 15-year transportation and purchase agreement between Applicant and K-N, Applicant would deliver up to 30,000 Mcf per day to K-N at a delivery point on K-N's Reydon Line in Roger Mills County, Oklahoma, near the North Reydon Field area. K-N would in turn redeliver such volumes, less volumes sold to K-N pursuant to the agreement, to Pandhandle for Applicant's account at a delivery point in Dewey County, Oklahoma. As partial consideration for such transportation service, K-N has the right to purchase from Applicant up to 12.5 percent of the total volumes delivered by Applicant to K-N at the actual weighted average purchase price paid by Applicant for such gas at the wellhead plus a gathering fee equal to Applicant's costs of gathering, compressing, dehydrating, treating and delivering such gas. Applicant would also pay K-N a unit transportation charge equal to that provided for in Article IX, Section 9.1 of K-N's Rate Schedule T-1 on file with the Commission [1] and K-N's actual costs of operating and maintaining for Applicant certain measuring and dehydration facilities, except that such payments would not be made with respect to gas purchased by K-N. Under this agreement, Applicant would reimburse K-N for 87.5 percent of K-N's actual costs of purchasing and installing the measuring and dehydration facilities; Applicant's portion of these costs is estimated to be $70,000.

In accordance with the provisions of a transportation and sales agreement among Applicant, Panhandle and Trunkline Gas Company (Trunkline), Applicant would cause K-N to deliver to Panhandle, and Panhandle would receive for Applicant's account, up to 15,500 Mcf of natural gas per day on a firm basis and up to 5,250 Mcf per day on an interruptible basis at an existing point of interconnection between K-N and Panhandle in Dewey County, Oklahoma. Trunkline would in turn redeliver to Applicant daily quantities of natural gas thermally equivalent to those received by Panhandle from K-N, less volume sold to Panhandle under the agreement and less a reduction for fuel usage and line losses. As partial consideration for this transportation service, Panhandle would have the option to purchase up to 12.5 percent of the volumes delivered to K-N by Applicant at the actual weighted average purchase price paid by Applicant for such gas, plus associated transportation charges paid by Applicant to K-N, plus associated gathering, compression, dehydration and treatment costs incurred by Applicant prior to delivery of such volumes to K-N. Applicant would also pay Panhandle a monthly charge of $74,520 which is based on a daily firm transportation quantity of 13,500 Mcf per day. This monthly charge is subject to both increase and decrease at a rate of 18.15 cents per Mcf should Panhandle receive more gas on any day than the specified daily firm transportation quantity or, conversely, be unable to receive volumes tendered by Applicant up to that quantity. Such charge may also vary as a result of any Panhandle rate proceeding, the installation of additional facilities by Panhandle to maintain capacity to provide the transportation service, or should be daily transportation quantity be reduced in accordance with the provisions of the agreement.

The winter service which Applicant proposes herein to provide Laclede under the winter service contract generally consists of deliveries by Applicant to Laclede on 80 days selected by Laclede during a specified winter period [2] of both volumes designated under the contract as transportation component volumes and storage component volumes. Under the winter service contract, the total volume of Covered Production which is actually transported to Applicant's pipeline system (for retention by Applicant or for resale to Laclede) is termed the net transported volume which basically consists of all Covered Production which has been purchased by Applicant, less all reductions in volumes resulting from the field transportation and sales arrangements previously described, as well as reductions occurring in the field gather system. When winter service is being rendered, Laclede is to receive as the transportation component volume a quantity of gas which is equal to the net transported volume Applicant receives from the North Reydon area on that day. The storage component volume is an additional quantity which is determined by using North Reydon volumes for a prior period as one of the factors, but which is over and above the net

[1] Gas volumes transported by K-N for Applicant would be included in volumes K-N is transporting for itself as well as others for purposes of computing the transportation charge under K-N's Rate Schedule T-1. The rate paid by Applicant to K-N, therefore, would depend upon the total volumes included in Rate Schedule T-1, but is presently estimated to be in the range of 3.75 cents to 4.0 cents per Mcf.

[2] The winter period under the winter service contract is the 100-day period from November 21 of one year through February 28 of the next year.

transported volume available to Applicant on the particular day.

Applicant states that it has entered into an off-system storage agreement and certain storage transportation agreements with others which would enable Applicant to deliver the storage component volumes. Under the terms of these agreements, gas would be transported from Applicant's system to underground storage fields of ANR Storage Company (ANR) near Kalkaska, Michigan, in the summer months, and storage gas would be returned to Applicant's system in the winter months.

All of the agreements are written in terms of thermal equivalency. The summer period in each of them is from April 1 through October 31 and the winter period from November 1 through April 30. Under the agreements, Applicant would provide stated percentages of transported (or injected and withdrawn) volumes for compressor fuel. Each agreement provides for the payment by Applicant of a monthly charge, with the exception of the agreement among Applicant, Panhandle and Trunkline which involves a monthly charge during only the summer period and a unit charge during the winter period.

These agreements are designed to provide 3,000,000 Mcf of annual storage and withdrawal capability to Applicant. Of this quantity, 1,650,000 Mcf would support the deliverability to Laclede of 1,611,300 Mcf of Storage Component gas under the winter service contract (the difference between such quantities being attributable to compressor fuel consumed for storage withdrawal and transportation back to Applicant's pipeline system), and the remaining 1,360,000 Mcf would be available to Applicant for general system purposes.

It is indicated that the total charges to be assessed Laclede by Applicant pursuant to the winter service contract are intended and designed to compensate fully Applicant for Laclede's proportionate share of all costs incurred by Applicant under arrangements made in connection with the various offsystem operations and transactions involved in rendering the service proposed herein. Such costs involve, among others, those incurred with respect to the purchasing, gathering, treatment, dehydration, compressing and processing of the gas; costs related to the transportation of the gas from the North Reydon Field area to Applicant's system; and costs related to the transportation and offsystem storage of the gas under the agreements. For winter service deliveries made to it, Laclede would also pay Applicant's unit average system transmission cost of service which may vary from time to time, as such is based upon Applicant's rate filings with the Commission. Additionally, pursuant to the winter service contract, the charges to Laclede for Storage Component volumes may be reduced under certain circumstances if any of the offsystem storage capability used in the determination of such charges is employed for other purposes.

No new facilities are required to be installed on Applicant's existing pipeline system in order to effectuate any of the sales for which Applicant requests authorization herein. Applicant states that its existing system has sufficient capacity to serve the firm contract volumes of its existing customers, including additionally both the volumes delivered to Laclede under Applicant's existing special winter service (Applicant's Rate Schedule SWS-1) and the volumes which are to be delivered to Laclede in accordance with the winter service contract governing the service proposed in this application. It is indicated that the present capacity of Applicant's East Line is adequate to receive and transport the additional volumes of gas which Trunkline would deliver to Applicant in Clay County, Illinois pursuant to the arrangements described herein. The sales to Panhandle and K-N would be made in western Oklahoma, distant from Applicant's pipeline system, and, consequently, would not affect the capacity of Applicant's system, it is asserted.

The facilities which Applicant requests authorization to acquire by purchase from Laclede and operate are gathering facilities in the North Reydon Field area which have been or would be constructed by Laclede to connect North Reydon Field wells from which Applicant would be purchasing production. It is expected that the total price of such facilities (Laclede's actual cost) would not exceed $400,000.

Any person desiring to be heard or to make any protest with reference to said application should on or before October 22, 1979, file with the Federal Energy Regulatory Commission, Washington, D.C. 20426, a petition to intervene or a protest in accordance with the requirements of the Commission's rules of practice and procedure (18 CFR 1.8 or 1.10) and the regulations under the Natural Gas Act (18 CFR 157.10). All protests filed with the Commission will be considered by it in determining the appropriate action to be taken but will not serve to make the protestants parties to the proceeding. Any person wishing to become a party to a proceeding or to participate as a party in any hearing therein must file a petition to intervene in accordance with the Commission's Rules.

Take further notice that, pursuant to the authority contained in and subject to jurisdiction conferred upon the Federal Energy Regulatory Commission by Sections 7 and 15 of the Natural Gas Act and the Commission's rules of practice and procedure, a hearing will be held without further notice before the Commission or its designee on this application if no petition to intervene is filed within the time required herein, if the Commission on its own review of the matter finds that a grant of the certificate is required by the public convenience and necessity. If a petition for leave to intervene is timely filed, or if the Commission on its own motion believes that a formal hearing is required, further notice of such hearing will be duly given.

Under the procedure herein provided for, unless otherwise advised, it will be unnecessary for Applicant to appear or be represented at the hearing.

Kenneth F. Plumb,

Secretary.

[FR Doc. 79-31183 Filed 10-9-79; 8:45 am]

BILLING CODE 6450-01-M

[Docket No. CP75-141]

Natural Gas Pipeline Company of America; Petition to Amend

October 1, 1979.

Take notice that on September 14, 1979, Natural Gas Pipeline Company of America (Petitioner), 122 South Michigan Avenue, Chicago, Illinois 60603, filed in Docket No. CP75-141 a petition to amend further the order of February 12, 1975,[1] as amended, in said docket pursuant to Section 7(c) of the Natural Gas Act by authorizing new exchange points at 3 wells in Roger Mills County, Oklahoma, a balancing point for deliveries from Arkansas Louisiana Gas Company (Arkla) to Petitioner in Wheeler County, Texas, and from Petitioner to Arkla in Beckham County, Oklahoma, and such future wells and/or balancing points which may be attached to either party's system in a specified area of interest located in western Oklahoma and the panhandle area of Oklahoma and Texas, all as

[1] This proceeding was commenced before the Federal Power Commission (FPC). By the joint regulation of October 1, 1977 (10 CFR 1000.1), it was transferred to the Federal Energy Regulatory Commission (FERC). The term "Commission", when used in the context of action taken prior to October 1, 1977, refers to the FPC, when used otherwise, the reference is to the FERC.

more fully set forth in the petition to amend further which is on file with the Commission and open to public inspection.

The order of February 12, 1975, as amended, authorized the construction and operation of facilities and the exchange of natural gas between Petitioner and Arkla at specified exchange points. Petitioner states that pursuant to an amendment, dated June 22, 1979, to the gas exchange agreement, Petitioner and Arkla have agreed to provide 3 additional delivery points in Roger Mills County, Oklahoma. The proposed delivery points would allow Petitioner to deliver its share of the gas from the Gamble Unit No. 1, Clyde Tico No. 1-28 and Hartley No. 1-8 wells to Arkla which also is purchasing gas from said wells. Petitioner would not be required to construct any facilities to effectuate said delivery of gas to Arkla. Petitioner and Arkla have also agreed that an existing interconnection between them located in Wheeler County, Texas, serve as a balancing delivery point by Arkla to Petitioner and an existing point of interconnection located in Beckham County, Oklahoma, serve as a balancing delivery point by Petitioner to Arkla.

Petitioner also requests authorization to add future wells and balancing points which may be attached to either party's system in a specified area of interest in western Oklahoma and the panhandle area of Oklahoma and Texas in order to expedite attachment of the producing wells in the area of interest and to prevent duplication of facilities.

Any person desiring to be heard or to make any protest with reference to said petition should on or before October 22 1979, file with the Federal Energy Regulatory Commission, Washington, D.C. 20426, a petition to intervene or a protest in accordance with the requirements of the Commission's rules of practice and procedure (18 CFR 1.8 or 1.10) and the Regulations under the Natural Gas Act (18 CFR 157.10). All protests filed with the Commission will be considered by it in determining the appropriate action to be taken but will not serve to make the protestants parties to the proceeding. Any person wishing to become a party to a proceeding or to participate as a party in any hearing therein must file a petition to intervene in accordance with the Commission's rules.

Kenneth F. Plumb,

Secretary.

[FR Doc. 79-31184 Filed 10-9-79; 8:45 am]

BILLING CODE 6450-01-M

[Docket No. RP76-52, etc.]

Northern Natural Gas Co.; Certification of Settlement Offer to Commission

October 3, 1979.

Take notice that on September 11, 1979, the presiding administrative law judge in this docket certified to the Commission pursuant to § 1.18(e) of the Commission rules an offer of settlement filed by Northern Natural Gas Company (Northern), with respect to a curtailment plan on its system, including compliance with section 401 of the Natural Gas Policy Act of 1978 (NGPA) and the Commission regulations thereunder.

Comments by the parties to the proceeding have been received which indicate that the proposal is supported by most parties. Flambeau Paper Company is the only party which specifically opposes the settlement. The basis of its adverse comments is the contention that the "settlement proposal fails to give proper weight to an asserted aspect of the National Energy Policy favoring the promotion of co-generation operations" (Certification at p. 1). One other comment filed by Allied Chemical Corporation, while not expressly opposing the settlement, seeks an exemption as to it of certain provisions of the settlement. All other comments support the settlement.

The curtailment priorities (Categories 1 through 8) to be established by the proposed settlement are as follows:

1. (a) Residential, small commericial and irrigation requirements less than 50 Mcf on a peak day.

(b) All commercial and irrigation requirements from 50 Mcf per day through 199 Mcf per day and all industrial requirements through 199 Mcf per day.

(c) Customer storage injection requirements.

(d) Requirements greater than 199 Mcf per day for schools, hospitals, sanitation facilities, correctional institutions, police protection, and fire protection except where the use of a fuel other than natural gas is economically practicable and that fuel is reasonably available.

(e) Requirements for essential agricultural uses as certified by the U.S.D.A. except where the use of boiler fuel other than natural gas is economically practicable and that fuel is reasonably available.

If curtailment in this Category (1) is required, the order of curtailment shall be (e), (d), (c), (b), and then (a).

2. Requirements for essential process and feedstock uses and plant protection other than when production operations are shut down, except where the use of fuel other than natural gas is economically practicable and that fuel is reasonably available.

3. All commercial and industrial requirements from 200 Mcf per day through 499 Mcf per day, not otherwise classified.

4. All commercial and industrial requirements for nonboiler use 500 Mcf per day and over, not otherwise classified; all commercial requirements from 500 Mcf per day through 1,499 Mcf per day, not otherwise classified.

5. Industrial requirements for boiler fuel use from 500 Mcf per day through 1,499 Mcf per day, not otherwise classifed.

6. Commerical and industrial requirements for boiler fuel use from 1,500 Mcf per day through 2,999 Mcf per day, not otherwise classified.

7. Commercial and industrial requirements for boiler fuel use from 3,000 Mcf per day through 10,000 Mcf per day, not otherwise classified.

8. Commercial and industrial requirements for boiler fuel use over 10,000 Mcf per day, not otherwise classified.

With respect to the proposed settlement (Stipulation and Agreement at pp. 1-2) Northern has stated the following:

It is clear that the passage of the NGPA and the rules and regulations promulgated as a result of its passage would require material revisions in Northern's presently effective curtailment plan and that further hearings would be required. Accordingly, beginning May 16, 1979, settlement conferences were held and settlement and compromise of all the issues in this consolidated proceeding have been achieved as more fully set out hereafter.

This Commission has repeatedly stated that settlement is to be encouraged and that nothing in its rules precludes the submission of a settlement which proposes a curtailment plan differing from that set out in the Commission's rules. The Commission has further stated that such a settlement plan will be evaluated in light of its responsibility to meet the statutory goal of protecting, to the maximum extent practicable, high priority users and essential agricultural uses.

The curtailment plan set forth in this Stipulation and Agreement is specifically designed to meet this statutory goal by amalgamating the provisions of Title IV of the NGPA with Northern's historic pattern of service. The permanent curtailment plan herein agreed to achieves the statutory goal of protecting the maximum extent practicable high priority users and essential agricultural uses while at the same time preserving Northern's historic pattern of service to the maximum extent practicable.

This notice is issued so that all persons not presently parties to this proceeding may have the opportunity to comment on the proposed settlement. Therefore any nonparty desiring to be heard or to protect the settlement should file a petition to intervene or protest with the Federal Energy Regulatory Commission, 825 North Capitol Street, NE., Washington, D.C. 20426, in accordance with §§ 1.8 and 1.10 of the Commission's rules of practice and procedure (18 CFR 1.8 and 1.10). All such petitions or protests should be filed on or before October 17, 1979. Protests will be considered by the Commission in determining the appropriate action to be

taken, but will not serve to make protestants parties to the proceeding.

Any person wishing to become a party must file a petition to intervene. Copies of this settlement are on file with the Commission and are available for public inspection.

Kenneth F. Plumb,

Secretary.

[FR Doc. 79-31196 Filed 10-9-79; 8:45 am]

BILLING CODE 6450-01-M

[Docket No. CP 70-248]

Panhandle Eastern Pipe Line Co.; Petition To Amend

October 2, 1979.

Take notice that on September 14, 1979, Panhandle Eastern Pipe Line Company (Petitioner), P.O. Box 1642, Houston, Texas 77001, filed in Docket No. CP70-248 a petition to amend further the order of May 27, 1970[1], as amended, in said docket pursuant to Section 7(c) of the Natural Gas Act by authorizing a new point of receipt in Texas County, Oklahoma, through which Petitioner would receive exchange gas and purchased gas from Western Gas Interstate Company (Western), all as more fully set forth in the petition to amend further which is on file with the Commission and open to public inspection.

The order of May 27, 1970, as amended, authorized the construction and operation of facilities and the exchange of natural gas with Western. Petitioner states that on June 14, 1979, it and Western entered into an amendment of the gas purchase and sales agreement, dated November 21, 1969, as amended, whereby a new point of receipt was added to receive gas delivered by Western at a point on Petitioner's pipeline in Texas County, Oklahoma. Accordingly, Petitioner requests that the order of May 27, 1970, as amended, be further amended to authorize this new point.

Any person desiring to be heard or to make any protest with reference to said petition to amend should on or before October 22, 1979, file with the Federal Energy Regulatory Commission, Washington, D.C. 20426, a petition to intervene or a protest in accordance with the requirements of the Commission's rules of practice and procedure (18 CFR 1.8 or 1.10) and the Regulations under the Natural Gas Act (18 CFR 157.10). All protests filed with the Commission will be considered by it in determining the appropriate action to be taken but will not serve to make the protestants parties to the proceeding. Any person wishing to become a party to a proceeding or to participate as a party in any hearing therein must file a petition to intervene in accordance with the Commission's rules.

Kenneth F. Plumb,

Secretary.

[FR Doc. 79-31195 Filed 10-9-79; 8:45 am]

BILLING CODE 6450-01-M

[1] This proceeding was commenced before the Federal Power Commission (FPC). By the joint regulation of October 1, 1977 (10 CFR 1000.1), it was transferred to the Federal Energy Regulatory Commission (FERC). The term "Commission", when used in the context of action taken prior to October 1, 1977, refers to the FPC; when used otherwise, the reference is to the FERC.

[Docket No. CP79-483]

Public Service Electric and Gas Co.; Petition for Declaratory Order

October 1, 1979.

Take notice that on August 31, 1979, Public Service Electric and Gas Company (Public Service), 80 Park Place, Newark, New Jersey 07101, filed in Docket No. CP79-483 a petition pursuant to Section 1.7(c) of the Commission's rules of practice and procedure (18 CFR 1.7(c)) for an order declaring that the use of gas, transported for Public Service to generate electricity does not come within the purview of conditions in such transportation authorization limiting such use, all as more fully set forth in the petition which is on file with the Commission and open for public inspection.

The petition states that in 1972, Public Service formed a wholly-owned subsidiary, Energy Development Corporation (EDC), for the purpose of exploring for and developing natural gas supplies to offset partially pipeline curtailments and to assist in providing the supply needed to meet the requirements of New Jersey consumers. EDC has been successful in discovering a number of gas fields, and certificates authorizing the transportation of the gas to New Jersey have been issued by the Commission.

The Commission's May 4, 1976 order in Docket Nos. CP75-275, CP75-276, and CP75-337 contained the following condition relating to the use of gas for electric generation:

"(e) Except for gas used for ignition and emergency purposes (as described in the Petition filed by PSE&G in this proceeding on November 13, 1975), during each winter season (December 1 through March 31), the gas certificated herein from the North Parcperdue Field shall not be used by PSE&G as boiler fuel for electric generation until such gas has been offered for sale to one of the three transporting pipeline companies at the highest lawful rate (excluding emergency rates) applicable to such sales in interstate commerce, and such pipeline company has determined not to purchase such gas, such offer to sell by PSE&G and refusal by the pipeline company to be documented and filed thereafter with the Commission."

Nearly identical conditions were contained in the Commission's orders authorizing transportation in Docket Nos. CP77-206, CP77-630, and CP78-30.

Public Service asserts that in response to numerous policy statements of the Department of Energy regarding the desirability of utilizing natural gas to displace fuel oil, in the late winter and spring of this year Public Service began negotiations to acquire supplies of gas to displace oil in generating electricity. Public Service states that it entered into contracts with three suppliers, National Gas and Oil Corporation (National), Equitable Gas Company (Equitable), and Delhi Gas Pipeline Corporation (Delhi), for the purchase of gas to be utilized for electric generation. The National and Equitable contracts will expire in October 1979; the Delhi contract expires on June 1, 1980. Public Service is currently receiving deliveries of gas from all three of these suppliers.

Public Service expects to purchase gas from Delhi and possibly from other suppliers during the upcoming winter season for the purpose of displacing oil in generating electricity. It is unclear, Public Service states, as to whether or not the purchase of gas to be transported and the use of such gas for generating electricity would violate the conditions in the orders authorizing the transportation of the gas discovered through Public Service's exploration program. The purchases are for the use of gas by an end-user for the specific purpose of helping meet national policy objectives in displacing oil, it is asserted. Public Service seeks an appropriate declaration from the Commission that the use of such gas to generate electricity does not fall within the purview of the conditions contained in the transportation certificates.

In the alternative, if the Commission determines that the use of gas transported for electric generation does not fall within this purview Public Service requests that the Commission suspend such conditions, at least for the duration of the transportation transactions. Public Service submits such suspension would clearly be in the public interest. Public Service further submits that these conditions that restrict or limit the ability of Public Service to utilize gas to displace oil in generating electricity are contrary to the public interest under present day conditions and should be eliminated.

Any person desiring to be heard or to make any protest with reference to said petition should on or before October 22, 1979, file with the Federal Energy Regulatory Commission, Washington, D.C. 20426, a petition to intervene or a protest in accordance with the requirements of the Commission's rules of practice and procedure (18 CFR 1.8 or 1.10). All protests filed with the Commission will be considered by it in determining the appropriate action to be taken but will not serve to make the protestants parties to the proceeding. Any person wishing to become a party in any hearing therein must file a petition to intervene in accordance with the Commission's rules.

Kenneth F. Plumb,

Secretary.

[FR Doc. 79-31186 Filed 10-9-79; 8:45 am]

BILLING CODE 6450-01-M

[Docket No. CP79-469]

Southern Natural Gas Co.; Application

October 1, 1979.

Take notice that on September 5, 1979, Southern Natural Gas Company (Southern), P.O. Box 2563, Birmingham, Alabama 35202, filed in Docket No. CP79-469 an application pursuant to Section 7(c) of the Natural Gas Act for a certificate of public convenience and necessity authorizing the transportation of natural gas for Arkansas Louisiana Gas Company (Arkla), all as more fully set forth in the application which is on file with the Commission and open for public inspection.

Southern would receive approximately 20 billion Btu's equivalent of natural gas per day on an interruptible basis for Arkla's account made available to Arkla from the Block 72 field, Main Pass area, offshore Louisiana and transport such volumes of gas for redelivery to United Gas Pipe Line Company (United) for Arkla's account at the existing point of interconnection between the facilities of Southern and United adjacent to Southern's Shadyside Compressor stations, St. Mary Parish, Louisiana as described in a transportation agreement between Southern and Arkla dated March 16, 1979. Southern has been advised that United would effectuate redeliveries of the gas to Arkla pursuant to an exchange arrangement filed with the Commission on August 17, 1979 in Docket No. CP79-446.

Southern proposes to redeliver to United for Arkla's account equivalent volumes of gas less 3.5 percent of the volumes of gas redelivered to account for fuel, company-used and lost or unaccounted for gas. Arkla has agreed to compensate Southern for performing the transportation service at a rate of 19.9 cents per Mcf of gas redelivered for Arkla's account, the application states.

Any person desiring to be heard or to make any protest with reference to said application should on or before October 22, 1979, file with the Federal Energy Regulatory Commission, Washington, D.C. 20426, a petition to intervene or a protest in accorance with the requirements of the Commission's rules of practice and procedure (18 CFR 1.8 or 1.10) and the Regulations under the Natural Gas Act (18 CFR 157.10). All protests filed with the Commission will be considered by it in determining the appropriate action to be taken but will not serve to make the protestants parties to the proceeding. Any person wishing to become a party to a proceeding or to participate as a party in any hearing therein must file a petition to intervene in accordance with the Commission's rules.

Take further notice that, pursuant to the authority contained in and subject to the jurisdiction conferred upon the Federal Energy Regulatory Commission by Sections 7 and 15 of the Natural Gas Act and the Commission's Rules of Practice and Procedure, a hearing will be held without further notice before the Commission or its designee on this application if no petition to intervene is filed within the time required herein, if the Commission on its own review of the matter finds that a grant of the certificate is required by the public convenience and necessity. If a petition for leave to intervene is timely filed, or if the Commission on its own motion believes that a formal hearing is required, further notice of such hearing will be duly given.

Under the procedure herein provided for, unless otherwise advised, it will be unnecessary for Southern to appear or be represented at the hearing.

Kenneth F. Plumb,

Secretary.

[FR Doc. 79-31187 Filed 10-9-79; 8:45 am]

BILLING CODE 6450-01-M

[Docket No. CP79-458]

South Texas Natural Gas Gathering Co.; Application

October 1, 1979.

Take notice that on August 28, 1979, South Texas Natural Gas Gathering Company (Applicant), 5 Greenway Plaza East, Houston, Texas 77046, filed in Docket No. CP79-458 an application pursuant to Section 7(c) of the Natural Gas Act for a certificate of public convenience and necessity authorizing the interruptible transportation of natural gas purchased by Transcontinental Gas Pipe Line Corporation (Transco), all as more fully set forth in the application which is on file with the Commission and open to public inspection.

Applicant proposes to receive, on a best efforts basis, any gas delivered for the account of Transco at various mutually agreeable points on Applicant's pipeline system. Such gas would be redelivered to Transco on an Mcf for Mcf basis (less compressor fuel, company-used and lost and unaccounted for gas) at an existing interconnection between Applicant and Transco in LaSalle County, Texas, or at other mutually agreeable existing points of interconnection in Transco's Texas supply area.

Initially, Applicant would transport gas that has been purchased by Transco from three sources. These sources include:

(1) Up to 3,000 Mcf per day (at 14.65 psia; 3,016 Mcf per day at 14.73 psia) purchased from MorMac Oil and Gas Company and delivered on Applicant's 18-inch pipeline in Weil Field, Jim Hogg County, Texas;

(2) Up to 10,000 Mcf per day (at 14.65 psia; 10,055 Mcf per day at 14.73 psia) purchased from McMoRan Exploration Company and delivered on Applicant's gathering system in South McAllen Field, Hidalgo County, Texas; and

(3) Up to 25,000 Mcf per day (at 14.65 psia; 25,137 Mcf per day at 14.73 psia) purchased from Pennzoil Company and other sellers and delivered by Delhi Gas Pipeline Corporation at the Cinco de Mayo lateral in Zapata County, Texas.

Gas purchased by Transco and moved pursuant to the proposal herein would be transported under Applicant's proposed FERC Rate Schedule T-2, filed herewith and with the Commission in Docket No. GP79-20 on July 20, 1979. Rate schedule T-2 is designed for the transportation of gas pursuant to a certificate of unlimited duration. Applicant would notify the Commission of all transportation service provided under T-2, in accordance with the regulations.

Applicant presently transports other volumes of gas for Transco under Applicant's FERC Rate Schedule T-1, which applies to gas purchased by others pursuant to Section 311(b) of the Natural Gas Policy Act of 1978. Rate Schedule T-1 was filed with the Commission in Docket No. GP79-20 on May 11, 1979.

Applicant states that should the proposed service be approved, it would transport Section 311 gas for Transco

under Rate Schedule T-2 upon termination of the service under Rate Schedule T-1.

Any person desiring to be heard or to make any protest with reference to said application should on or before October 22, 1979, file with the Federal Energy Regulatory Commission, Washington, D.C. 20426, a petition to intervene or a protest in accordance with the requirements of the Commission's rules of practice and procedure (18 CFR 1.8 or 1.10) and the regulations under the Natural Gas Act (18 CFR 157.10). All protests filed with the Commission will be considered by it in determining the appropriate action to be taken but will not serve to make the protestants parties to the proceeding. Any person wishing to become a party to a proceeding or to participate as a party in any hearing therein must file a petition to intervene in accordance with the Commission's Rules.

Take further notice that, pursuant to the authority contained in and subject to jurisdiction conferred upon the Federal Energy Regulatory Commission by Sections 7 and 15 of the Natural Gas Act and the Commission's rules of practice and procedure, a hearing will be held without further notice before the Commission or its designee on this application if no petition to intervene is filed within the time required herein, if the Commission on its own review of the matter finds that a grant of the certificate is required by the public convenience and necessity. If a petition for leave to intervene is timely filed, or if the Commisson on its own motion believes that a formal hearing is required, further notice of such hearing will be duly given.

Under the procedure herein provided for, unless otherwise advised, it will be unnecessary for Applicant to appear or be represented at the hearing.

Kenneth F. Plumb,

Secretary.

[FR Doc. 79-31168 Filed 10-9-79; 8:45 am]

BILLING CODE 6450-01-M

[Docket No. CI79-524]

Sun Oil Co.; Petition for Declaratory Order

October 1, 1979.

Take notice that on June 22, 1979, Sun Oil Company (Sun), P.O. Box 20, Dallas, Texas 75221 filed a petition for declaratory order in Docket No. CI79-524 pursuant to § 1.7(c) of the Commission's rules of practice and procedure. Sun requests that such an order state whether or not Sun or Exxon Corporation (Exxon) is required to make any filings with or obtain any authorization from the Commission prior to Exxon's taking and receiving certain quantities of gas from the Seeligson Field Unit located in Jim Wells and Kleberg counties, Texas.

Sun is the unit operator for that part of the Seeligson field unit located in Jim Wells County under the terms of a 1956 operating agreement. Gas produced from the Sun-operated part of the unit is sold to Tennessee Gas Pipeline Company. Pursuant to a 1960 modification to the operating agreement, the Seeligson Field unit was enlarged to include an adjacent tract in Kleberg County. Exxon, owner of the leasehold rights, became a party to the operating agreement and was designated operator of the additional tract. In recent years, Exxon has been unable to produce its share of the unit reserves from this tract and has requested Sun to permit it to construct facilities and to receive through these facilities gas sufficient to make up its full allocated share of unit gas. To date, Sun has not granted Exxon's request. Exxon has filed suit against Sun [1] seeking to enjoin Sun from interfering with Exxon's construction of facilities and the receiving of gas through them.

Any person desiring to be heard or to make any protest with reference to said petition should file a petition to intervene or a protest with the Federal Energy Regulatory Commission 825 North Capitol Street, N.E., Washington, D.C. 20426, in accordance with the requirements of the Commission's rules of practice and procedure (18 CFR 1.8 or 1.10). All such petitions or protests should be filed on or before October 22, 1979. All protests filed with the Commission will be considered by it in determining the appropriate action but will not serve to make the protestants parties to the proceeding. Any person wishing to become a party to a proceeding, or to partcipate as a party in any hearing therein, must file a petition to intervene in accordance with the Commission's rules.

Kenneth F. Plumb,

Secretary.

[FR Doc. 79-31169 Filed 10-9-79; 8:45 am]

BILLING CODE 6450-01-M

[Docket No. CP79-53]

Texas Eastern Transmission Corp.; Petition to Amend

October 1, 1979.

Take notice that on September 17, 1979, Texas Eastern Transmission Corporation (Texas Eastern), P. O. Box 2521, Houston, Texas 77001, filed in Docket No. CP79-53 a petition to amend the order of January 3, 1979, issuing a certificate of public convenience and necessity in the instant docket pursuant to Section 7(c) of the Natural Gas Act and § 157.7(b) of the Commission's regulations thereunder (18 CFR 157.7(b)) so as to increase the total project cost limitations for the construction of gas purchase facilities for the calendar year 1979, all as more fully set forth in the petition to amend which is on file with the Commission and open for public inspection.

Pursuant to the order issued on January 3, 1979, Texas Eastern was authorized to construct, during the calendar year 1979, gas purchase facilities. The order limited the total cost of said facilities to $10,000,000 which was $2,000,000 les than the maximum of $12,000,000 available to Texas Eastern under § 157.7(b) of the regulations.

Texas Eastern requests authorization to increase its total project cost for the calendar year 1979 from $10,000,000 to the maximum allowable of $12,000,000 to be used for additional gas purchase facilities.

Texas Eastern asserts that due to increased construction costs caused by inflation and the number of new gas supply sources in Texas Eastern's gas supply area, Texas Eastern would soon exhaust the authorization for gas purchase facilities. It is asserted that the granting of this petition would insure that Texas Eastern would be able to maintain its present active gas supply program for the benefit of its customers, which at the same time, minimize the cost and delay which would be created by the requirement of filing separate applications.

Any person desiring to be heard or to make any protest with reference to said petition to amend should on or before October 22, 1979, file with the Federal Energy Regulatory Commission, Washington, D.C. 20426, a petition to intervene or a protest in accordance with the requirements of the Commission's rules of practice and procedure (18 CFR 1.8 or 1.10) and the regulations under the Natural Gas Act (18 CFR 157.10). All protests filed with the Commission will be considered by it in determining the appropriate action to be taken but will not serve to make the protestants parties to the proceeding. Any person wishing to become a party to a proceeding or to participate as a party in any hearing therein must file a

---

[1] *Exxon Corporation v. Sun Oil Company* No. 19,956, 79th Judicial District, Jim Wells County, Texas (filed April 24, 1979).

petition to intervene in accordance with the Commission's rules.

Kenneth F. Plumb,

Secretary.

[FR Doc. 79-31190 Filed 10-9-79; 8:45 am]

BILLING CODE 6450-01-M

[Docket No. CP79-488]

Texas Eastern Transmission Corp.; Application

October 1, 1979.

Take notice that on September 17, 1979, Texas Eastern Transmission Corporation (Texas Eastern), P.O. Box 2521, Houston, Texas 77001, filed in Docket No. CP79-488 an application pursuant to Section 7(c) of the Natural Gas Act for a certificate of public convenience and necessity for authorization to transport for Consolidated Edison Company of New York, Inc. (Con Ed), up to 15,000 dekatherms equivalent of natural gas per day, all as more fully set forth in the application which is on file with the Commission and open for public inspection.

Texas Eastern states that Con Ed has arranged to purchase natural gas for UGI Corporation for electric and/or steam generation to displace oil. Texas Eastern would receive from UGI the stated quantities of natural gas at the existing point of interconnection between Texas Eastern and Consolidated Gas Supply Corporation located in Somerset County, Pennsylvania, and transport and redeliver equal quantities, less quantities for fuel and shrinkage, to or for the account of Con Ed, at the following existing points of interconnection:

(a) To Con Ed at measuring station No. 058 in Richmond County, New York,

(b) For the account of Con Ed at the delivery point to Transcontinental Gas Pipe Line Corporation at Lambertville, New Jersey,

(c) For the account of Con Ed at the interconnection with Algonquin Gas Transmission Company in Morris County, New Jersey, or

(d) At other mutually agreeable points of delivery, for a term ending May 31, 1980.

Texas Eastern would charge Con Ed a rate of 16.08 cents per dekatherm delivered by Texas Eastern to or for the account of Con Ed, provided, however, for quantities delivered by Texas Eastern which, when added to quantities delivered by Texas Eastern to Con Ed under Texas Eastern's Rate Schedules TS-1 and ISS and other transportation agreements, exceed the combined total curtailment of gas sales to Con Ed under all of Texas Eastern's firm sales rate schedules, the rate would be 18.80 cents, subject to the outcome of proceedings at Docket No. RP78-87, Texas Eastern indicates in the application.

In addition, Texas Eastern would retain for fuel use and shrinkage an amount of gas equal to 3 percent of the quantities transported during the period, April 16 through November 15, and 6 percent of the quantities transported during the period, November 16 through April 15.

The proposed transportation service is in accord with the policy stated in the Commission's Order No. 30, issued May 17, 1979, in that such service would result in the displacement of oil, it is asserted.

Any person desiring to be heard or to make any protest with reference to said application should on or before October 22, 1979, file with the Federal Energy Regulatory Commission, Washington, D.C. 20426, a petition to intervene or a protest in accordance with the requirements of the Commission's rules of practice and procedure (18 CFR 1.8 or 1.10) and the Regulations under the Natural Gas Act (18 CFR 157.10). All protests filed with the Commission will be considered by it in determining the appropriate action to be taken but will not serve to make the protestants parties to the proceeding. Any person wishing to become a party to a proceeding or to participate as a party in any hearing therein must file a petition to intervene in accordance with the Commission's rules.

Take further notice that, pursuant to the authority contained in and subject to the jurisdiction conferred upon the Federal Energy Regulatory Commission by Sections 7 and 15 of the Natural Gas Act and the Commission's rules of practice and procedure, a hearing will be held without further notice before the Commission or its designee on this application if no petition to intervene is filed within the time required herein, if the Commission on its own review of the matter finds that a grant of the certificated is required by the public convenience and necessity. If a petition for leave to intervene is timely filed, or if the Commission on its own review of the matter finds that a grant of the certificate is required by the public convenience and necessity. If a petition for leave to intervene is timely filed, or if the Commission on its own motion believes that a formal hearing is required, further notice of such hearing will be duly given.

Under the procedure herein provided for, unless otherwise advised, it will be unnecessary for Texas Eastern to appear or be represented at the hearing.

Kenneth F. Plumb,

Secretary.

[FR Doc. 79-31191 Filed 10-9-79; 8:45 am]

BILLING CODE 6450-01-M

Economic Regulatory Administration

[ERA Docket No. 79-CERT-096]

ASARCO, Inc.; Application for Certification of the Use of Nature Gas To Displace Fuel Oil

Take notice that on September 26, 1979, ASARCO, Inc. (ASARCO), 120 Broadway, New York, New York 10005, filed an application for certification of an eligible use of natural gas to displace fuel oil at its smelters in Hayden, Arizona and El Paso, Texas pursuant to 10 CFR Part 595 (44 FR 47920, August 16, 1979), all as more fully set forth in the application on file with the Economic Regulatory Administration (ERA) and open to public inspection at the ERA, Docket Room 4126-A, 2000 M Street, NW., Washington, D.C., 20461, from 8:30 a.m.-4:30 p.m., Monday through Friday, except Federal holidays.

In its application, ASARCO states that the volume of natural gas for which it requests certification is 735,000 Mcf at the Hayden smelter and 630,000 at the El Paso smelter. The eligible seller is Esperanza Transmission Company, P.O. Box 1050, Corpus Cristie, Texas 78403. This natural gas is estimated to displace the use of 5,578,650 gallons of No. 2 diesel fuel oil (0.4% sulfur) at the Hayden smelter and 4,781,700 gallons of No. 2 diesel fuel oil (0.4% sulfur) at the El Paso smelter for the period from November 1, 1979 to April 30, 1980. The gas will be transported by the El Paso Natural Gas Company, P.O. Box 1492, El Paso, Texas 79978.

In order to provide the public with as much opportunity to participate in this proceeding as is practicable under the circumstances, we are inviting any person wishing to comment concerning this application to submit comments in writing to the Economic Regulatory Administration, Room 4126-A, 2000 M Street, NW., Washington, D.C. 20461, Attention: Mr. Finn K. Neilsen, on or before October 20, 1979.

An opportunity to make an oral presentation of data, views, and arguments either against or in support of this application may be requested by any interested person in writing within the ten (10) day comment period. The request should state the person's interest, and, if appropriate, why the person is a proper representative of a group or class of persons that has such

an interest. The request should include a summary of the proposed oral presentation and a statement as to why an oral presentation is necessary. If ERA determines an oral presentation is required, further notice will be given to ASARCO and any persons filing comments, and published in the Federal Register.

Issued in Washington, D.C., on October 4, 1979.

Doris J. Dewton,

Assistant Administrator, Office of Petroleum Operations, Economic Regulatory Administration.

[FR Doc. 79-31318 Filed 10-9-79; 8:45 am]

BILLING CODE 6450-01-M

DEPARTMENT OF ENERGY

Office of Assistant Secretary for International Affairs

Proposed Subsequent Arrangements

Pursuant to Section 131 of the Atomic Energy Act of 1954, as amended (42 U.S.C. 2160), notice is hereby given of proposed "subsequent arrangements" under the Agreement for Cooperation Between the Governments of the United States and Japan and the Agreement for Cooperation Between the Government of the United States and the European Atomic Energy Community.

The subsequent arrangements to be carried out under the above mentioned agreements involve approval of the following transfers from Japan to the United Kingdom, for the purpose of reprocessing:

Name of reactor and owner	Number of elements	Kgs of U	U-235%	Kgs of Pu
Tsurga Nuclear Power Station, Japan Electric Power Company.	42 (BWR Type).	7,900	1.03	61
Fukushima Station No. 1, Units 1, 2, and 5, Tokyo Electric Power Company.	224 (BWR Type).	41,840	1.01	134

The Department of Energy has received letters of assurance from the Japanese Government that the recovered uranium and plutonium will not be transferred from the United Kingdom without prior consent of the United States Government.

In accordance with Section 131 of the Atomic Energy Act of 1954, as amended, it has been determined that these subsequent arrangements will not be inimical to the common defense and security.

These subsequent arrangements will take effect October 25, 1979 and after fifteen days of continuous session of the Congress, beginning the day after the date on which the reports required by Section 131 of the Atomic Energy Act of 1954, as amended, (42 U.S.C. 2160) are submitted to the Committee on Foreign Affairs of the House of Representatives and the Committee on Foreign Relations of the Senate. The two time periods referred to above shall run concurrently.

For the Department of Energy.

Dated: October 5, 1979

Frederick McGoldrick,

Acting Director for Nuclear Affairs, International Nuclear and Technical Programs.

[FR Doc. 79-31488 Filed 10-9-79; 11:27 am]

BILLING CODE 6450-01-M

Sunshine Act Meetings

Federal Register
Vol. 44, No. 197
Wednesday, October 10, 1979

This section of the FEDERAL REGISTER contains notices of meetings published under the "Government in the Sunshine Act" (Pub. L. 94-409) 5 U.S.C. 552b(e)(3).

CONTENTS

	Items
Civil Aeronautics Board	1
Federal Communications Commission	2, 3
Federal Election Commission	4
Federal Energy Regulatory Commission	5
Federal Home Loan Bank Board	6, 7
Federal Reserve System	8, 9
International Trade Commission	10, 11

1

[M-251 Amdt. 3; 10/4/79]

CIVIL AERONAUTICS BOARD.

Notice of addition and closure of item to the October 9, 1979 meeting.

TIME AND DATE: 9:30 a.m., October 9, 1979.

PLACE: Room 1011, 1825 Connecticut Avenue NW., Washington, D.C. 20428.

SUBJECT: 18. Docket 27158, AeroPeru schedule filing. (BIA)

STATUS: Closed.

PERSON TO CONTACT: Phyllis T. Kaylor, the Secretary (202) 673-5068.

SUPPLEMENTARY INFORMATION: AeroPeru has filed proposed new schedules with the Board which are to take effect October 31, 1979. In order to permit timely discussion of the issues raised by this filing, we recommend that this item be placed on the October 9, 1979 agenda. Accordingly, the following Members have voted that agency business requires that the Board meet on this item on less than seven days' notice and that no earlier announcement of the meeting was possible:

Chairman Marvin S. Cohen
Member Richard J. O'Melia
Member Elizabeth E. Bailey
Member Gloria Schaffer

This memo relates to the civil aviation situation with Peru. Public disclosure, particularly to foreign governments, of opinions, evaluations, and strategies related to our problems could seriously compromise the ability of the United States to achieve an agreement which could be in the best interest of the United States. Accordingly, we believe that public observation of this meeting would involve matters the premature disclosure of which would be likely to significantly frustrate implementation of proposed agency action within the meaning of the exemption provided under 5 U.S.C. 552b(c)(9)(B) and 14 CFR section 310b.5(9)(B) and that the meeting should be closed:

Chairman Marvin S. Cohen
Member Richard J. O'Melia
Member Elizabeth E. Bailey
Member Gloria Schaffer

Persons Expected To Attend

Board Members.—Chairman Marvin S. Cohen; Member Richard J. O'Melia; Member Elizabeth E. Bailey; and Member Gloria Schaffer.
Assistants to Board Members.—Mr. David Kirstein; Mr. James L. Deegan; Mr. Daniel M. Kasper; and Mr. Stephen Lachter.
Managing Director.—Mr. Cressworth Lander.
Executive Assistant to the Managing Director.—Mr. John R. Hancock.
Office of the General Director.—Mr. Michael E. Levine.
Office of the General Counsel.—Ms. Mary M. Schuman; Mr. Gary J. Edles; Mr. Peter B. Schwarzkopf; and Mr. Michael Schopf.
Bureau of International Aviation.—Mr. Sanford Rederer; Mr. Ivars V. Mellups; Mr. Douglas V. Leister; Mr. Jerome Nelson; Ms. Carolyn K. Coldren; and Mr. Jeffrey B. Gaynes.
Bureau of Domestic Aviation.—Mr. James A. Saltsman.
Office of Economic Analysis.—Mr. Robert H. Frank and Mr. Larry Manheim.
Bureau of Consumer Protection.—Mr. Reuben B. Robertson and Ms. Patricia Kennedy.
Office of the Secretary.—Mrs. Phyllis T. Kaylor; Ms. Deborah A. Lee; and Ms. Louise Patrick.

General Counsel Certification

I certify that this meeting may be closed to the public under 5 U.S.C. 552b(c)(9)(B) and 14 CFR section 310b.5(9)(B) and that the meeting may be closed to public observation.

Gary J. Edles,
Deputy General Counsel.

[S-1971-79 Filed 10-5-79; 3:53 pm]
BILLING CODE 6320-01-M

2

FEDERAL COMMUNICATIONS COMMISSION.

TIME AND DATE: 9:30 a.m., Wednesday, October 10, 1979.

PLACE: Room 856, 1919 M Street NW., Washington, D.C.

STATUS: Closed Commission meeting following the open meeting.

MATTERS TO BE CONSIDERED:

Agenda, Item Number, and Subject

General—1—Briefing on 1979 WARC Developments.
General—2—Reorganization of the Common Carrier Bureau.

This meeting may be continued the following word day to allow the Commission to complete appropriate action.

Additional information concerning this meeting may be obtained from Maureen Peratino, FCC Affairs Office, telephone number (202) 632-7260.

Issued: October 4, 1979.

[S-1972-79 Filed 10-5-79; 3:53 pm]
BILLING CODE 6712-01-M

3

FEDERAL COMMUNICATIONS COMMISSION.

TIME AND DATE: 9:30 a.m., Wednesday, October 10, 1979.

PLACE: Room 856, 1919 M Street, NW., Washington, D.C.

STATUS: Commission open meeting.

MATTERS TO BE CONSIDERED:

Agenda, Item Number, and Subject

General—1—Amendment of the search fee provision of the Freedom of Information Rules.
General—2—Title: Fiscal Year 1980 Policy Research. This item will seek Commission approval for fiscal year 1980 funding of policy research studies. The areas of study include Common Carrier issues, UHF comparability, electro-magnetic propagation, and AM channel spacing.
General—3—*Minority Ownership Report to the Commission.*—On February 14, 1978, the FCC through its Minority Ownership Task Force Issued a contract to CCG, Inc., a research corporation in Cambridge, Mass. to conduct an in depth study of financial institutions' broadcast loan policies and their effect on minorities seeking to acquire broadcast properties. In addition, the FCC contract requested detailed information on the methods used by rating services and whether these services accurately reflect minority audience listening patterns.

The Minority Ownership Task Force will present a summary of CCG, Inc's study and submit CCG's report and recommendations to the Commission for their consideration of future FCC activities in light of the findings of the study.

Private Radio—1—*Title.*—Deregulation of Part 97 of the Rules regarding emissions authorized in the Amateur Radio Service. (Docket No. 20777)

Summary.—The Commission is asked to decide whether or not radio amateurs should be permitted the use of the American Standard Code for Information

Interchange (ASCII) and other types of radioteleprinter codes; and to determine what, if any, limitations should apply to such operation. Three basic options are under consideration: (1) Continued mandatory use of the Baudot Code only (the status quo), (2) Permitting the use of the American Standard Code for Information Interchange, and (3) Permitting the use of any desired radioteleprinter code. The Commission's decision here will not result in an immediate change in the rules, but will provide the basis for the development of a Third Report and Order which will amend the rules in accordance with the Commission's decision.

Private Radio—2—*Title.*—Amendment of Part 83 of the rules to ensure the availability of certain compulsory radio equipment to the operator of the vessel's steering station in use.

Summary.—The FCC will consider whether to adopt a Report and Order (PR Docket 79-101) that revises Sections 83.202 and 83.514 of the FCC Rules. The first revision would required that a crew member who is to stand watch at the vessel's steering station must have been instructed in radio operation and voice procedure by the radio operator. The second would require that the VHF radio capability of the vessel be available at whatever steering station is actually in use (except where the station is auxiliary in nature and used only during short periods for docking or close-in maneuvering).

Private Radio—3—*Title.*—Rulemaking petition RM-2574 to combine the amateur radio operators' examination and commercial radio operators' examination, which would enable applicants to receive both licenses simultaneously.

Summary.—The FCC will consider whether to adopt or deny a rulemaking petition (RM-2574). The rulemaking petition proposes that the FCC combine amateur radio operators and commercial radio operators' examination.

Private Radio—4—*Title.*—Inquiry into Alleged Improper Issuance of Licenses and Call Signs in the Amateur Radio Service (Docket No. 21418).

Summary.—The Commission received information from various indicating that some persons and obtained Amateur Radio Licenses or upgrades without taking and passing the required Commission examinations; that some Amateur licensees, including some Commission employees, had obtained call signs in a manner inconsistent with the Commission's rules; and that in some instances the payment of money or other consideration may have been involved in these transactions. On October 19, 1977, the FCC released an Order instituting the present proceeding to inquire into these matters. The Commission will consider the staff's report and recommendations for further action.

Common Carrier—1—*Title.*—Mark Edwards, d.b.a. Edwards Industries, and Edwards Industries, Inc. v. Bell Telephone Company of Nevada, The Pacific Telephone & Telegraph Company, and American Telephone & Telegraph Company. (File No. TS 7-78).

Summary.—Complainants, communications equipment manufacturers and consultants, allege that Nevada Bell threatened disconnection of the service of one of Complainant's customers if they did not remove a coupler which Complainants had manufactured and which was used with a key telephone system. Complainants seek damages and an order forbidding further interference with use of their products. Defendant claim that the coupler was not properly registered for use with key telephone systems, since it did not appear on the FCC's list of equipment registered for this purpose.

Common Carrier—2—*Title.*—Lincoln Telephone & Telegraph Company's Application for Review of NCCC's Section 214 Supplemental Facilities Application to lease additional channels between Lincoln and Omaha, Nebraska.

Summary.—In March, 1978 NCCC filed a Section 214 Application requesting authority to supplement existing facilities. On July 10, 1978 LT&T filed a Petition to Deny the grant. The Common Carrier Bureau declared the Petition moot. On August 30, 1978 LT&T filed its Application for Review. The Commission is considering the following: (1) when the application was effective; (2) whether the Petition to Deny was properly dismissed; (3) whether the application was difficult; and (4) whether economic harm would result to LT&T if the grant is allowed.

Common Carrier—3—*Title.*—ITT World Communications, Inc. Amendments to Joint Tariff FCC No. 12 Revising the Rate Structure for International Telex Service.

Summary.—The FCC will consider ITT's tariff revisions in which ITT proposes to offer a 30 cents per minute usage rate reduction for those customers who provide at their own expense access to ITT's international telex network. Among the issues to be considered are whether ITT has provided adequate cost support material, whether its revision will create unreasonable discriminations against certain classes of users, whether its revision will have an unlawful competitive impact on other international record carriers, and whether implementation of ITT is tariff revision will frustuate the Commission's policy concerning reformation of international telex rate structure.

Cable Television—1—*Title.*—"Request for Extension of Waiver" filed February 21, 1979, by Wometco Enterprises, Inc., operator of cable television systems serving Plainfield, North Plainfield, South Plainfield and East Brunswick, New Jersey.

Summary.—On July 20, 1977 Wometco was granted a two year period of time within which to divest its ownership interests either in a subscription television station, WTVG (Ind., Channel 68) Newark, New Jersey, or in the four co-located cable television systems. On Feburary 21, 1979 Wometco filed a request for an extension of that waiver for an additional two years or until the Commission issues a final order concluding its reformulation of the cross ownership rules pursuant to the *Order* filed December 18, 1978, by the U.S. Court of Appeals for the District of Columbia in *NCCB* v. *FCC*, No. 75-1933.

Cable Television—2—*Title.*—"Application for Review" filed August 28, 1978 by Cypress Valley Cablevision, Inc., operator of a CATV system serving Marshall, Texas.

Summary.—On July 28, 1978, the Cable Television Bureau denied the request of Cypress to add Station KLTV (ABC, Channel 7) Tyler, Texas because the carriage was inconsistent with Section 76.63 of the rules. Cypress now seeks review of that decision on the ground that the requested carriage will not cause undue economic harm to local broadcast stations as explained in Cablecom of Kirksville, Inc. 71 FCC 2d 587 (1979). The question before the Commission is whether to grant or deny the request for review.

Assignment and Transfer—1—*Title.*—Application for the voluntary transfer of control of 51 percent of the stock of KZFM(FM), Corpus Christi, Texas, from Frank J. Gerow, et al. to Arnold Malkan, Trustee et al.

Summary.—Roger H. Stoner filed a petition to deny the transfer application of KZFM(FM), Corpus Christi on the grounds that the Commission cannot act until litigation involving all parties in the States of Texas is resolved, and because the principals of the proposed transferee have conducted themselves in a manner demonstrating their lack of character qualifications to be Commission licensees.

Renewal—1—*Title.*—Application for review of the Broadcast Bureau's March 27, 1979 grant of renewal of license for Station WHRT, Hartselle, Alabama.

Subject.—Cable TV of Alabama, Inc. questions whether the Broadcast Bureau considered ongoing proceedings in the Common Carrier and Cable Television Bureaus involving WHRT licensee Dorsey Eugene Newman before granting Station WHRT renewal of license.

Renewal—2—*Title.*—By direction letters imposing appropriate EEO sanctions on certain broadcast stations and requiring them to submit periodic progress reports.

Summary.—After routinely evaluating the EEO programs submitted by various stations with their applications for renewal of licenses, the Bureau is recommending that the Commission impose various sanctions on the following stations, largely because of insufficient EEO effort: WABB/WABB-FM, WALG/WWCW(FM), WAVA(FM), WCEH/WCEH-FM, WDEN/WDEN-FM, WEVU-TV, WEXI, WJAT/WJAT-FM, WJAZ, WLAY/WLAY-FM, WLIQ, WLOQ(FM), WMAC/WHCC(FM), WNEX, WPNX, WQCK/WRBN-FM, WRGA/WQTU(FM), WSTU, WXGI, and KLRA.

Aural—1—*Title.*—Application for constuction permit (File No. BPED-790604AD) for a new education FM station by The Trustees of the University of Pennsylvania to replace the deleted facilities of former Station WXPN, Philadelphia, Pennsylvania.

Summary.—The FCC considers whether to grant a new construction permit, in an uncontested proceeding, to the former licensee of the same facilities.

Television—1—*Subject.*—Applications of Central Texas Broadcasting Company, Business Communications, Inc., Blake-Potash Corporation and Heart O' Texas Broadcasting, Inc., for a construction permit for a new commercial television broadcast station on channel 25, Waco, Tex.

Summary.—This designation order is before the Commission because it involves an applicant controlled by a party which pleaded nolo contendere to a criminal antitrust indictment and because it involves a clarification of the financial standards for new broadcast applicants.

Television—2—*Title.*—Application tendered by the Denton Channel Two Foundation for authority to construct a new television broadcast station at Denton, Texas. Request for waiver of Commission Cut-Off Rule and acceptance of late-filed application. Bureau recommends granting waiver request and accepting late-filed application.

Complaints and Compliance—1—*Title.*—Complaint of Thomas A. McCrary against Station WAGA-TV.

Summary.—The Commission has before it an Application for Review of a Broadcast Bureau ruling which denied a Section 315 complaint. The complaint concerns WAGA-TV's refusal to afford McCrary opportunities equal to those afforded to his gubernatorial opponents on WAGA-TV's "Georgians Speak" series. In its ruling, the Bureau found that McCrary was not entitled to equal opportunities since the program was a "bona fide news interview"; and that no action was warranted on McCrary's charge that WAGA-TV discriminated in providing broadcast services to opposing candidates. The Application for Review alleges that the Bureau found that the program was an "on-the-spot news event" and that WAGA-TV wrongfully failed to devote any time to McCrary's campaign. The Commission must decide whether the Application for Review contains sufficient grounds to warrant a reversal of the ruling.

Complaints and Compliance—2—*Title.*—Fairness Doctrine complaint of John Bickel against NBC. Fairness Doctrine complainant, who has alleged NBC distorted presentation on nuclear power and violated the Fairness Doctrine by not presenting view that nuclear power is safe and economical, seeks review of Broadcast Bureau denial of complaint. Review is limited to issue of alleged "news distortion." Commission must decide if Bureau was resonable in determining that no extrinsic evidence of intentional distortion by NBC was presented by complainant.

Complaints and Compliance—3—*Title.*—In re Complaint of John F. Donato against New Jersey Public Broadcasting Authority.

Summary.—The Commission has before it two Petitions for Reconsideration of its November 4, 1977 Memorandum Opinion and Order affirming a Bureau ruling which found that a rebroadcast of a debate held 2½ days earlier was not exempt from Section 315 "equal opportunities" as "on-the-spot coverage of a bona fide news event." Petitioners assert not only that is broadcast delay is permissible for purposes of the exemption to the extent dictated by the licensee's news judgment but also that any Commission limitation of the exemption impinges upon the licensee's exercise of free speech and the unique responsibilities of a public broadcaster. The Commission must decide whether the rebroadcast in question, delayed 2½ days, still qualified as exempt "on-the-spot coverage" under the circumstances.

This meeting may be continued the following work day to allow the Commission to complete appropriate action.

Additional information concerning this meeting may be obtained from Maureen Peratino, FCC Public Affairs Office, telephone number (202) 632-7260.

Issued: October 4, 1979.

[S-1973-79 Filed 10-5-79; 3:53 pm]

BILLING CODE 6712-01-M

4

[FR No. 1936]

FEDERAL ELECTION COMMISSION.

PREVIOUSLY ANNOUNCED DATE AND TIME: Thursday, October 11, 1979, 10 a.m.

CHANGES IN MEETING:

1. Remove from agenda draft AO 1979-48, James S. Eastham (Rexnor Inc. PAC).
2. Remove from agenda the Ernst & Whinney Consultant's report on statistical sampling—certification process.
3. Add to agenda revised draft AO 1979-50, James M. Peirce, President, National Federation of Federal Employees (Public Affairs Council).

PERSON TO CONTACT FOR INFORMATION: Mr. Fred Eiland, Public Information Officer, telephone: 202-523-4065.

Majorie W. Emmons,

Secretary to the Commission.

[S-1970-79 Filed 10-5-79; 3:07 pm]

BILLING CODE 6715-01-M

5

FEDERAL ENERGY REGULATORY COMMISSION.

"FEDERAL REGISTER" CITATION OF PREVIOUS ANNOUNCEMENT: Will be published October 5, 1979.

PREVIOUSLY ANNOUNCED TIME AND DATE OF MEETING: 10 a.m., October 5, 1979.

CHANGE IN MEETING: Addition to the closed meeting of October 5, 1979.

Item and Subject

(2) Initiation of a formal private investigation.

(3) Proposed disposition of administrative and investigative proceedings.

(4) Initiation of a private investigation.

Kenneth F. Plumb,

Secretary.

[S-1967-79 Filed 10-5-79; 11:33 am]

BILLING CODE 6450-01-M

6

FEDERAL HOME LOAN BANK BOARD.

"FEDERAL REGISTER" CITATION OF PREVIOUS ANNOUNCEMENT: Vol. 44, page 57295, October 4, 1979.

PREVIOUSLY ANNOUNCED TIME AND DATE OF MEETING: 9 a.m., October 11, 1979.

PLACE: 1700 G Street NW., sixth floor, Washington, D.C.

STATUS: Open meeting.

CONTACT PERSON FOR MORE INFORMATION: Franklin O. Bolling (202-377-6677).

CHANGES IN THE MEETING: The following item was added to the agenda for the open meeting:

Application for Conversion from Federal Mutal Savings and Loan to State-Chartered Mutual Savings Bank—First Federal Savings and Loan Association of Port Washington, Port Washington, New York—AND SUBSEQUENT MERGER INTO—The Dime Savings Bank of New York, Brooklyn, New York.

S-1966-79 Filed 10-5-79; 10:45 am]

BILLING CODE 6720-01-M

7

FEDERAL HOME LOAN BANK BOARD.

TIME AND DATE: 9:30 a.m., October 9, 1979.

PLACE: 1700 G Street NW., sixth floor, Washington, D.C.

STATUS; Open meeting.

CONTACT PERSON FOR MORE INFORMATION: Franklin O. Bolling (202-377-6677).

MATTERS TO BE CONSIDERED: Application for Permission to Convert From Mutual to Stock Form, Post-Approval Amendment No. 2—Beverly Hills Federal Savings and Loan Association, Beverly Hills, California.

Announcement is being made at the earliest practicable time.

[S-1963-79 Filed 10-5-79; 2:13 pm]

BILLING CODE 6720-01-M

8

FEDERAL RESERVE SYSTEM: Board of Governors.

TIME AND DATE: 10 a.m., Monday, October 15, 1979.

PLACE: 20th Street and Constitution Avenue NW., Washington, D.C. 20551.

STATUS: Open.

MATTERS TO BE CONSIDERED:

1. Proposed statement to be presented to the Subcommittee on Financial Institutions Supervision, Regulation and Insurance of the House Committee on Banking, Finance and Urban Affairs regarding pending bank holding company bills.
2. Any agenda items carried forward from a previously announced meeting.

Note.—This meeting will be recorded for the benefit of those unable to attend. Cassettes will be available for listening in the Board's Freedom of Information Office, and copies may be ordered for $5 per cassette by calling (202) 452-3684 or by writing to: Freedom of Information Office, Board of Governors of the Federal Reserve System, Washington, D.C. 20551

CONTACT PERSON FOR MORE INFORMATION: Mr. Joseph R. Coyne, Assistant to the Board (202) 452-3204.

Dated: October 5, 1979.

Griffith L. Garwood,

Deputy Secretary of the Board.

[S-1974-79 Filed 10-5-79; 3:53 pm]

BILLING CODE 6210-01-M

9

FEDERAL RSERVE SYSTEM: Board of Governors.

TIME AND DATE: 10 a.m., Friday, October 12, 1979.

PLACE: 20th Street and Constitution Avenue NW., Washington, D.C. 20551.

STATUS: Closed.

MATTERS TO BE CONSIDERED:

1. Personnel actions (appointments, promotions, assignments, reassignments, and salary actions) involving individual Federal Reserve System employees.
2. Any agenda items carried forward from a previously announced meeting.

CONTACT PERSON FOR MORE INFORMATION: Mr. Joseph R. Coyne, Assistant to the Board (202) 452-3204.

[S-1968-79 Filed 10-5-79; 11:02 am]

BILLING CODE 6210-01-M

10

[USITC SE-79-38]

INTERNATIONAL TRADE COMMISSION.

TIME AND DATE: 10 a.m., Tuesday, October 23, 1979.

PLACE: Room 117, 701 E Street NW, Washington, D.C. 20436.

STATUS: Open to the public.

MATTERS TO BE CONSIDERED:

1. Agenda.
2. Minutes.
3. Ratifications.
4. Petitions and complaints, if necessary.
   a. Powered tire changers (Docket Number 598).
5. Nonelectric cookware (Inv. TA-201-39)—briefing and vote on injury.
6. Any items left over from previous agenda.

CONTACT PERSON FOR MORE INFORMATION: Kenneth R. Mason, Secretary, (202) 523-0161.

[S-1945-79 Filed 10-4-79; 4:20 pm]

BILLING CODE 7020-02-M

11

[USITC SE-79-39]

INTERNATIONAL TRADE COMMISSION.

TIME AND DATE: 10:00 a.m., Friday, October 26, 1979.

PLACE: Room 117, 701 E Street, NW., Washington, D.C. 20436.

STATUS: Open to the public.

MATTERS TO BE CONSIDERED: 1. Nonelectric cookware (Inv. TA-201-39)—vote on remedy, if necessary.

CONTACT PERSON FOR MORE INFORMATION: Kenneth R. Mason, Secretary (202) 523-0161.

[S-1965-79 Filed 10-4-79; 4:20 pm]

BILLING CODE 7020-02-M

federal register

Wednesday
October 10, 1979

Part II

Environmental Protection Agency

Standards of Performance for New Stationary Sources; Continuous Monitoring Performance Specifications

ENVIRONMENTAL PROTECTION AGENCY

40 CFR Part 60

[FRL 1276-4]

Standards of Performance for New Stationary Sources; Continuous Monitoring Performance Specifications

AGENCY: Environmental Protection Agency (EPA).

ACTION: Proposed Revisions.

SUMMARY: On October 6, 1975 (40 FR 46250), the EPA promulgated revisions to 40 CFR Part 60, Standards of Performance for New Stationary Sources, to establish specific requirements pertaining to continuous emission monitoring. An appendix to the regulation contained Performance Specifications 1 through 3, which detailed the continuous monitoring instrument performance and equipment specifications, installation requirements, and test and data computation procedures for evaluating the acceptability of continuous monitoring systems. Since the promulgation of these performance specifications, the need for a number of changes which would clarify the specification test procedures, equipment specifications, and monitoring system installation requirements has become apparent. The purpose of the revisions is to incorporate these changes into Performance Specifications 1 through 3.

The proposed revisions would apply to all monitoring systems currently subject to performance specifications 1, 2, or 3, including sources subject to Appendix P to 40 CFR Part 51.

DATES: Comments must be received on or before December 10, 1979.

ADDRESSES: *Comments.* Comments should be submitted (in duplicate if possible) to the Central Docket Section (A-130), Attn: Docket No. OAQPS-79-4, U.S. Environmental Protection Agency, 401 M Street, S.W., Washington, D.C. 20460.

Docket. Docket No. OAQPS-79-4, containing material relevant to this rulemaking, is located in the U.S. Environmental Protection Agency, Central Docket Section, Room 2903B, 401 M Street, S.W., Washington, D.C. The docket may be inspected between 8 A.M. and 4 P.M. on weekdays, and a reasonable fee may be charged for copying.

FOR FURTHER INFORMATION CONTACT: Don R. Goodwin, Director, Emission Standards and Engineering Division (MD-13), Environmental Protection Agency, Research Triangle Park, North Carolina 27711, telephone number (919) 541-5271.

SUPPLEMENTARY INFORMATION: Changes common to all three of the performance specifications are the clarification of the procedures and equipment specifications, especially the requirement for intalling the continuous monitoring sample interface and of the calculation procedure for relative accuracy. Specific changes to the specifications are as follows:

Performance Specification

1. The optical design specification for mean and peak spectral responses and for the angle of view and projection have been changed from "500 to 600 nm" range to "515 to 585 nm" range and from "5°" to "3°", respectively.

2. The following equipment specifications have been added:

a. Optical alignment sight indicator for readily checking alignment.

b. For instruments having automatic compensation for dirt accumulation on exposed optical surfaces, a compensation indicator at the control panel so that the permissible maximum 4 percent compensation can be determined.

c. Easy access to exposed optical surfaces for cleaning and maintenance.

d. A system for checking zero and upscale calibration (previously required in paragraph 60.13).

e. For systems with slotted tubes, a slotted portion greater than 90 percent of effluent pathlength (shorter slots are permitted if shown to be equivalent).

f. An equipment specification for the monitoring system data recorder resolution of <5 percent of full scale.

3. A procedure for determining the acceptability of the optical alignment sight has been specified; the optical alignment sight must be capable of indicating that the instrument is misaligned when an error of ±2 percent opacity is caused by misalignment of the instrument at a pathlength of 8 meters.

4. Procedures for calibrating the attenuators used during instrument calibrations have been added; these procedures require the use of a laboratory spectrophotometer operating in the 400-700 nm range with a detector angle view of <10 degrees and an accuracy of 1 percent.

5. The following changes have been made to the procedures for the operational test period:

a. The requirement for an analog strip chart recorder during the performance tests has been deleted; all data are collected on the monitoring system data recorder.

b. Adjustment of the zero and span at 24-hour intervals during the drift tests is optional; adjustments are required only when the accumulated drift exceeds the 24-hour drift specification.

c. The amount of automatic zero compensation for dirt accumulation must be determined during the 24-hour zero check so that the actual zero drift can be quantified. The automatic zero compensation system must be operated during the performance test.

d. The requirement for offsetting the data recorder zero during the operational test period has been deleted.

e. Off the stack "zero alignment" of the instrument prior to installation is permitted.

Performance Specification 2

1. "Continuous monitoring system" has been redefined to include the diluent monitor, if applicable. The change requires that the relative accuracy of the system be determined in terms of the emission standard, e.g., mass per unit calorific value for fossil-fuel fired steam generators.

2. The applicability of the test procedures excludes single-pass, in-situ continuous monitoring systems. The procedures for determining the acceptability of these systems are evaluated on a case-by-case basis.

3. For extractive systems with diluent monitors, the pollutant and diluent monitors are required to use the same sample interface.

4. The procedure for determining the acceptability of the calibration gases has been revised, and the 20 percent (with 95 percent confidence interval) criterion has been changed to 5 percent of mean value with no single value being over 10 percent from the mean.

5. For low concentrations, a 10 percent of the applicable standard limitation for the relative accuracy has been added.

6. An equipment specification for the system data recorder requiring that the chart scale be readable to within <0.50 percent of full-scale has been added.

7. Instead of spanning the instrument at 90 percent of full-scale, a mid-level span is required.

8. The response time test procedure has been revised and the difference limitation between the up-scale and down-scale time has been deleted.

9. The relative accuracy test procedure has been revised to allow different tests (e.g., pollutant, diluent, moisture) during a 1-hour period to be correlated.

10. A low-level drift may be substituted for the zero drift test.

Performance Specification 3

1. The applicability of the test procedures has been limited to those monitors that introduce calibration gases directly into the analyzer and are used as diluent monitors. Alternative procedures for other types of monitors are evaluated on a case-by-case basis.

2. Other changes were made to be consistent with the revisions under Performance Specification 2.

The proposed revised performance specifications would apply to all sources subject to Performance Specifications 1, 2, or 3. These include sources subject to standards of performance that have already been promulgated and sources subject to Appendix P to 40 CFR Part 51. Since the purpose of these revisions is to clarify the performance specifications which were promulgated on October 6, 1975, not to establish more stringent requirements, it is reasonable to conclude that most continuous monitoring instruments which met and can continue to meet the October 6, 1975, specifications can also meet the revised specifications.

Under Executive Order 12044, the Environmental Protection Agency is required to judge whether a regulation is "significant" and therefore subject to the procedural requirements of the Order or whether it may follow other specialized development procedures. EPA labels these other regulations "specialized". I have reviewed this regulation and determined that it is a specialized regulation not subject to the procedural requirements of Executive Order 12044.

Dated: October 1, 1979.

Douglas M. Costle,

Administrator.

It is proposed to revise Appendix B, Part 60 of Chapter I, Title 40 of the Code of Federal Regulations as follows:

Appendix B—Performance Specifications

Performance Specification 1— Specifications and Test Procedures For Opacity Continuous Monitoring Systems in Stationary Sources

1. Applicability and Principle

1.1 Applicability. This Specification contains instrument design, performance, and installation requirements, and test and data computation procedures for evaluating the acceptability of continuous monitoring systems for opacity. Certain design requirements and test procedures established in the Specification may not be applicable to all instrument designs; equivalent systems and test procedures may be used with prior approval by the Administrator.

1.2 Principle. The opacity of particulate matter in stack emissions is continuously monitored by a measurement system based upon the principle of transmissometry. Light having specific spectral characteristics is projected from a lamp through the effluent in the stack or duct and the intensity of the projected light is measured by a sensor. The projected light is attenuated due to absorption and scatter by the particulate matter in the effluent; the percentage of visible light attenuated is defined as the opacity of the emission. Transparent stack emissions that do not attenuate light will have a transmittance of 100 percent or an opacity of zero percent. Opaque stack emissions that attenuate all of the visible light will have a transmittance of zero percent or an opacity of 100 percent.

This specification establishes specific design criteria for the transmissometer system. Any opacity continuous monitoring system that is expected to meet this specification is first checked to verify that the design specifications are met. Then, the opacity continuous monitoring system is calibrated, installed, an operated for a specified length of time. During this specified time period, the system is evaluated to determine conformance with the established performance specifications.

2. Definitions

2.1 Continuous Monitoring System. The total equipment required for the determination of opacity. The system consists of the following major subsystems:

2.1.1 Sample Interface. That portion of the system that protects the analyzer from the effects of the stack effluent and aids in keeping the optical surfaces clean.

2.1.2 Analyzer. That portion of the system that senses the pollutant and generates a signal output that is a function of the opacity.

2.1.3 Data Recorder. That portion of the system that processes the analyzer output and provides a permanent record of the output signal in terms of opacity. The data recorder may include automatic data reduction capabilities.

2.2 Transmissometer. That portion of the system that includes the sample interface and the analyzer.

2.3 Transmittance. The fraction of incident light that is transmitted through an optical medium.

2.4 Opacity. The fraction of incident light that is attenuated by an optical medium. Opacity (Op) and transmittance (Tr) are related by:

$$Op = 1 - Tr.$$

2.5 Optical Density. A logarithmic measure of the amount of incident light attenuated. Optical density (D) is related to the transmittance and opacity as follows:

$$D = -\log_{10} Tr = -\log_{10} (1 - Op).$$

2.6 Peak Spectral Response. The wavelength of maximum sensitivity of the transmissometer.

2.7 Mean Spectral Response. The wavelength which bisects the total area under the effective spectral response curve of the transmissometer.

2.8 Angle of View. The angle that contains all of the radiation detected by the photodetector assembly of the analyzer at a level greater than 2.5 percent of the peak detector response.

2.9 Angle of Projection. The angle that contains all of the radiation projected from the lamp assembly of the analyzer at a level of greater than 2.5 percent of the peak illuminace.

2.10 Span Value. The opacity value at which the continuous monitoring system is set to produce the maximum data display output as specified in the applicable subpart.

2.11 Upscale Calibration Value. The opacity value at which a calibration check of the monitoring system is performed by simulating an upscale opacity condition as viewed by the receiver.

2.12 Calibration Error. The difference between the opacity values indicated by the continuous monitoring system and the known values of a series of calibration attenuators (filters or screens).

2.13 Zero Drift. The difference in continuous monitoring system output readings before and after a stated period of normal continuous operation during which no unscheduled maintenance, repair, or adjustment took place and when the opacity (simulated) at the time of the measurements was zero.

2.14 Calibration Drift. The difference in the continuous monitoring system output readings before and after a stated period of normal continuous operation during which no unscheduled maintenance, repair, or adjustment took place and when the opacity (simulated) at the time of the measurements was the same known upscale calibration value.

2.15 Response Time. The amount of time it takes the continuous monitoring system to display on the data recorder 95 percent of a step change in opacity.

2.16 Conditioning Period. A period of time (168 hours minimum) during which the continuous monitoring system is operated without unscheduled maintenance, repair, or adjustment prior to initiation of the operational test period.

2.17 Operational Test Period. A period of time (168 hours) during which the continuous monitoring system is expected to operate within the established performance specifications without any unscheduled maintenance, repair, or adjustment.

2.18 Pathlength. The depth of effluent in the light beam between the receiver and the transmitter of a single-pass transmissometer, or the depth of effluent between the transceiver and reflector of a double-pass transmissometer. Two pathlengths are referenced by this Specification as follows:

2.18.1 Monitor Pathlength. The pathlength at the installed location of the continuous monitoring system.

2.18.2 Emission Outlet Pathlength. The pathlength at the location where emissions are released to the atmosphere.

3. Apparatus

3.1 Continuous Monitoring System. Use any continuous monitoring system for opacity which is expected to meet the design specifications in Section 5 and the performance specifications in Section 7. The data recorder may be an analog strip chart recorder type or other suitable device with an input signal range compatible with the analyzer output.

3.2 Calibration Attenuators. Use optical filters with neutral spectral characteristics or screens known to produce specified optical densities to visible light. The attenuators must be of sufficient size to attenuate the entire light beam of the transmissometer. Select and calibrate a minimum of three attenuators according to the procedures in Sections 8.1.2. and 8.1.3.

3.3 Upscale Calibration Value Attenuator. Use an optical filter with neutral spectral characteristics, a screen, or other device that produces an opacity value (corrected for pathlength, if necessary) that is greater than the sum of the applicable opacity standard and one-fourth of the difference between the opacity standard and the instrument span value, but less than the sum of the opacity standard and one-half of the difference between the opacity standard and the instrument span value.

3.4 Calibration Spectrophotometer. To calibrate the calibration attenuators use a laboratory spectrophotometer meeting the following minimum design specification:

Parameter	Specification
Wavelength range	400–700 nm
Detector angle of view	≤ 10°
Accuracy	≤ 0.5 pct. transmittance

4. Installation Specifications

Install the continuous monitoring system where the opacity measurements are representative of the total emissions from the affected facility. Use a measurement path that represents the average opacity over the cross section. Those requirements can be met as follows:

4.1 Measurement Location. Select a measurement location that is (a) downstream from all particulate control equipment; (b) where condensed water vapor is not present; (c) accessible in order to permit routine maintenance; and (d) free of interference from ambient light (applicable only if transmissometer is responsive to ambient light).

4.2 Measurement Path. Select a measurement path that passes through the centroid of the cross section. Additional requirements or modifications must be met for certain locations as follows:

4.2.1 If the location is in a straight vertical section of stack or duct and is less than 4 equivalent diameters downstream or 1 equivalent diameter upstream from a bend, use a path that is in the plane defined by the bend.

4.2.2 If the location is in a vertical section of stack or duct and is less than 4 diameters downstream and 1 diameter upstream from a bend, use a path in the plane defined by the bend upstream of the transmissometer.

4.2.3 If the location is in a horizontal section of duct and is at least 4 diameters downstream from a vertical bend, use a path in the horizontal plane that is one-third the distance up the vertical axis from the bottom of the duct.

4.2.4 If the location is in a horizontal section of duct and is less than 4 diameters downstream from a vertical bend, use a path in the horizontal plane that is two-thirds the distance up the vertical axis from the bottom of the duct for upward flow in the vertical section, and one-third the distance up the vertical axis from the bottom of the duct for downward flow.

4.3 Alternate Locations and Measurement Paths. Other locations and measurement paths may be selected by demonstrating to the Administrator that the average opacity measured at the alternate location or path is equivalent (± 10 percent) to the opacity as measured at a location meeting the criteria of Sections 4.1 and 4.2. To conduct this demonstration, measure the opacities at the two locations or paths for a minimum period of two hours. The opacities of the two locations or paths may be measured at different times, but must be measured at the same process operating conditions.

5. Design Specifications

Continuous monitoring systems for opacity must comply with the following design specifications:

5.1 Optics.

5.1.1 Spectral Response. The peak and mean spectral responses will occur between 515 nm and 585 nm. The response at any wavelength below 400 nm or above 700 nm will be less than 10 percent of the peak spectral response.

5.1.2 Angle of View. The total angle of view will be no greater than 4 degrees.

5.1.3 Angle of Projection. The total angle of projection will be no greater than 4 degrees.

5.2 Optical Alignment sight. Each analyzer will provide some method for visually determining that the instrument is optically aligned. The system provided will be capable of indicating that the unit is misaligned when an error of ± 2 percent opacity occurs due to misalignment at a monitor pathlength of eight (8) meters.

5.3 Simulated Zero and Upscale Calibration System. Each analyzer will include a system for simulating a zero opacity and an upscale opacity value for the purpose of performing periodic checks of the transmissometer calibration while on an operating stack or duct. This calibration system will provide, as a minimum, a system check of the analyzer internal optics and all electronic circuitry including the lamp and photodetector assembly.

5.4 Access to External Optics. Each analyzer will provide a means of access to the optical surfaces exposed to the effluent stream in order to permit the surfaces to be cleaned without requiring removal of the unit from the source mounting or without requiring optical realignment of the unit.

5.5 Automatic Zero Compensation Indicator. If the monitoring system has a feature which provides automatic zero compensation for dirt accumulation on exposed optical surfaces, the system will also provide some means of indicating that a compensation of 4 ± 0.5 percent opacity has been exceeded; this indicator shall be at a location accessible to the operator (e.g., the data output terminal). During the operational test period, the system must provide some means for determining the actual amount of zero compensation at the specified 24-hour intervals so that the actual 24-hour zero drift can be determined (see Section 8.4.1).

5.6 Slotted Tube. For transmissometers that use slotted tubes, the length of the slotted portion(s) must

be equal to or greater than 90 percent of the monitor pathlength, and the slotted tube must be of sufficient size and orientation so as not to interfere with the free flow of effluent through the entire optical volume of the transmissometer photodetector. The manufacturer must also show that the transmissometer uses appropriate methods to minimize light reflections: as a minimum, this demonstration shall consist of laboratory operation of the transmissometer both with and without the slotted tube in position. Should the operator desire to use a slotted tube design with a slotted portion equal to less than 90 percent of the monitor pathlength, the operator must demonstrate to the Administrator that acceptable results can be obtained. As a minimum demonstration, the effluent opacity shall be measured using both the slotted tube instrument and another instrument meeting the requirement of this specification but not of the slotted tube design. The measurements must be made at the same location and at the same process operating conditions for a minimum period of two hours with each instrument. The shorter slotted tube may be used if the average opacity measured is equivalent (± 10 percent) to the opacity measured by the non-slotted tube design.

6. Optical Design Specifications Verifciation Procedure.

These procedures will not be applicable to all designs and will require modification in some cases; all modifications are subject to the approval of the Administrator.

Test each analyzer for conformance with the design specifications of Sections 5.1 and 5.2 or obtain a certificate of conformance from the analyzer manufacturer as follows:

6.1 Spectral Response. Obtain detector response, lamp emissivity and filter transmittance data for the components used in the measurement system from their respective manufacturers.

6.2 Angle of View. Set up the receiver as specified by the manufacturer's written instructions. Draw an arc with radius of 3 meters in the horizontal direction. Using a small (less than 3 centimeters) non-directional light source, measure the receiver response at 4-centimeter intervals on the arc for 24 centimeters on either side of the detector centerline. Repeat the test in the vertical direction.

6.3 Angle of Projection. Set up the projector as specified by the manufacturer's written instructions. Draw an arc with radius of 3 meters in the horizontal direction. Using a small (less than 3 centimeters) photoelectric light detector, measure the light intensity at 4-centimeter intervals on the arc for 24 centimeters on either side of the light source centerline of projection. Repeat the test in the vertical direction.

6.4 Optical Alignment Sight. In the laboratory set up the instrument as specified by the manufacturers written instructions for a monitor pathlength of 8 meters. Assure that the instrument has been properly aligned and that a proper zero and span have been obtained. Insert an attenuator of 10 percent (nominal) opacity into the instrument pathlength. Slowly misalign the projector unit until a positive or negative shift of two percent opacity is obtained by the data recorder. Then, following the manufacturer's written instructions, check the alignment and assure that the alignment procedure does in fact indicate that the instrument is misaligned. Realign the instrument and follow the same procedure for checking misalignment of the receiver or retroreflector unit.

6.5 Manufacturer's Certificate of Conformance (Alternative to above). Obtain from the manufacturer a certificate of conformance which certifies that the first analyzer randomly sampled from each month's production was tested according to Sections 6.1 through 6.3 and satisfactorily met all requirements of Section 5 of this Specification. If any of the requirements were not met, the certificate must state that the entire month's analyzer production was resampled according to the military standard 105D sampling procedure (MIL-STD-105D) inspection level II; was retested for each of the applicable requirements under Section 5 of this Specification; and was determined to be acceptable under MIL-STD-105D procedures, acceptable quality level 1.0. The certificate of conformance must include the results of each test performed for the analyzer(s) sampled during the month the analyzer being installed was produced.

7. Performance Specifications

The opacity continuous monitoring system performance specifications are listed in Table 1-1.

Table 1-1.—*Performance specifications*

Parameter	Specifications
1 Calibration error [a]	≤ 3 pct opacity
2 Response time	≤ 10 seconds.
3 Conditioning period [b]	≥ 168 hours.
4 Operational test period [b]	≥ 168 hours.
5 Zero drift (24-hour) [a]	≤ 2 pct opacity.

Table 1-1.—*Performance specifications*—Continued

Parameter	Specifications
6 Calibration drift (24-hour) [a]	≤ 2 pct opacity.
7 Data recorder resolution	≤ 0.50 pct of full scale span value.

[a] Expressed as sum of absolute mean and the 95 percent confidence interval.

[b] During the conditioning and operational test periods, the continuous monitoring system shall not require any corrective maintenance, repair, replacement, or adjustment other than that clearly specified as routine and required in the operation and maintenance manuals.

8. Performance Specification Verification Procedure

Test each continuous monitoring system that conforms to the design specifications (Section 5) using the following procedures to determine conformance with the performance specifications of Section 7.

8.1 Preliminary Adjustments and Tests. Prior to installation of the system on the stack, perform these steps or tests at the affected facility or in the manufacturer's laboratory.

8.1.1 Equipment Preparation. Set up and calibrate the monitoring system for the monitor pathlength to be used in the installation as specified by the manufacturer's written instructions. If the monitoring system has automatic pathlength adjustment, follow the manufacturer's instructions to adjust the signal output from the analyzer to equivalent values based on the emission outlet pathlength. Set the span at the value specified in the applicable subpart. At this time perform the zero alignment by balancing the response of the continuous monitoring system so that the simulated zero check coincides with the actual zero check performed across the simulated monitor pathlength. Then, assure that the upscale calibration value is within the required opacity range (Section 3.3).

8.1.2 Calibrated Attenuator Selection. Based on the span value specified in the applicable subpart, select a minimum of three calibrated attenuators (low, mid, and high range) using Table 1-2. If the system is operating with automatic pathlength compensation, calculates the attenuator values required to obtain a system response equivalent to the applicable values shown in Table 1-2; use equation 1-1 for the conversion. A series of filters with nominal optical density (opacity) values of 0.1(20), 0.2(37), 0.3(50), 0.4(60), 0.5(68), 0.6(75), 0.7(80), 0.8(84), 0.9(88), and 1.0(90) are commercially available. Within this limitation of filter availability, select the calibrated

attenuators having the values given in Table 1–2 or having values closest to those calculated by Equation 1–1.

Table 1-2.—*Required Calibrated Attenuator Values (Nominal)*

Span value (percent opacity)	Calibrated attenuator optical density (equivalent opacity in parenthesis)		
	Low-range D_2	Mid-range	High-range
50	0.1 (20)	0.2 (37)	0.3 (50)
60	.1 (20)	.2 (37)	.3 (50)
70	1 (20)	.3 (50)	.4 (60)
80	1 (20)	.3 (50)	.6 (75)
90	.1 (20)	.4 (60)	.7 (80)
100	.1 (20)	.4 (60)	.9 (87½)

$$D_1 = D_2 (L_1/L_2) \qquad \text{Equation 1–1}$$

Where:

D_1 = Nominal optical density value of required mid, low, or high range calibration attenuators.

D_2 = Desired attenuator optical density output value from Table 1–2 at the span required by the applicable subpart.

L_1 = Monitor pathlength.

L_2 = Emission outlet pathlength.

8.1.3 Attenuator Calibration. Calibrate the required filters or screens using a laboratory spectrophotometer meeting the specifications of Section 3.4 to measure the transmittance in the 400 to 700 nm wavelength range; make measurements at wavelength intervals of 20 nm or less. As an alternate procedure use an instrument meeting the specifications of Section 3.4 to measure the C.I.E. Daylight$_C$ Luminous Transmittance of the attenuators. During the calibration procedure assure that a minimum of 75 percent of the total area of the attenuator is checked. The attenuator manufacturer must specify the period of time over which the attenuator values can be considered stable, as well as any special handling and storing procedures required to enhance attenuator stability. To assure stability, attenuator values must be rechecked at intervals less than or equal to the period of stability guaranteed by the manufacturer. However, values must be rechecked at least every 3 months. If desired, the stability checks may be performed on an instrument other than that initially used for the attenuator calibration (Section 3.4). However, if a different instrument is used, the instrument shall be a high quality laboratory transmissometer or spectrophotometer and the same instrument shall always be used for the stability checks. If a secondary instrument is to be used for stability checks, the value of the calibrated attenuator shall be measured on this secondary instrument immediately following calibration and prior to being used. If over a period time an attenuator value changes by more than ±2 percent opacity, it shall be recalibrated or replaced by a new attenuator.

If this procedure is conducted by the filter or screen manufacturer or independent laboratory, obtain a statement certifying the values and that the specified procedure, or equivalent, was used.

8.1.4 Calibration Error Test. Insert the calibrated attenuators (low, mid, and high range) in the transmissometer path at or as near to the midpoint as feasible. The attenuator must be placed in the measurement path at a point where the effluent will be measured; i.e., do not place the calibrated attenuator in the instrument housing. While inserting the attenuator, assure that the entire projected beam will pass through the attenuator and that the attenuator is inserted in a manner which minimizes interference from reflected light. Make a total of five nonconsecutive readings for each filter. Record the monitoring system output readings in percent opacity (see example Figure 1–1).

8.1.5 System Response Test. Insert the high-range calibrated attenuator in the transmissometer path five times and record the time required for the system to respond to 95 percent of final zero and high-range filter values (see example Figure 1–2).

8.2 Preliminary Field Adjustments. Install the continuous monitoring system on the affected facility according to the manufacturer's written instructions and perform the following preliminary adjustments;

8.2.1 Optical and Zero Alignment. When the facility is not in operation, conduct the optical alignment by aligning the light beam from the transmissometer upon the optical surface located across the duct or stack (i.e., the retroflector or photodetector, as applicable) in accordance with the manufacturer's instructions. Under clear stack conditions, verify the zero alignment (performed in Section 8.1.1) by assuring that the monitoring system response for the simulated zero check coincides with the actual zero measured by the transmissometer across the clear stack. Adjust the zero alignment, if necessary. Then, after the affected facility has been started up and the effluent stream reaches normal operating temperature, recheck the optical alignment. If the optical alignment has shifted realign the optics.

8.2.2 Optical and Zero Alignment (Alternative Procedure). If the facility is already on line and a zero stack condition cannot practicably be obtained, use the zero alignment obtained during the preliminary adjustments (Section 8.1.1) prior to installation of the transmissometer on the stack. After completing all the preliminary adjustments and tests required in Section 8.1, install the system at the source and align the optics, i.e., align the light beam from the transmissometer upon the optical surface located across the duct or stack in accordance with the manufacturer's instruction. The zero alignment conducted in this manner shall be verified and adjusted, if necessary, the first time the facility is not in operation after the operational test period has been completed.

8.3 Conditioning Period. After completing the preliminary field adjustments (Section 8.2), operate the system according to the manufacturer's instructions for an initial conditioning period of not less than 168 hours while the source is operating. Except during times of instrument zero and upscale calibration checks, the continuous monitoring system will analyze the effluent gas for opacity and produce a permanent record of the continuous monitoring system output. During this conditioning period there shall be no unscheduled maintenance, repair, or adjustment. Conduct daily zero calibration and upscale calibration checks, and, when accumulated drift exceeds the daily operating limits, make adjustments and/or clean the exposed optical surfaces. The data recorder shall reflect these checks and adjustments. At the end of the operational test period, verify that the instrument optical alignment is correct. If the conditioning period is interrupted because of source breakdown (record the dates and times of process shutdown), continue the 168-hour period following resumption of source operation. If the conditioning period is interrupted because of monitor failure, restart the 168-hour conditioning period when the monitor becomes operational.

8.4 Operational Test Period. After completing the conditioning period operate the system for an additional 168-hour period. It is not necessary that the 168-hour operational test period immediately follow the 168-hour conditioning period. Except during times of instrument zero and upscale calibration checks, the continuous monitoring system will analyze the effluent gas for opacity and will produce a permanent record of the continuous monitoring system output. During this period, there will be no unscheduled maintenance, repair, or adjustment. Zero and calibration adjustments, optical surface cleaning, and optical realignment may be performed (optional) only at 24-hour intervals or at

such shorter intervals as the manufacturer's written instructions specify. Automatic zero and calibration adjustments made by the monitoring system without operator intervention or initiation are followable at any time. If the operational test period is interrupted because of source breakdown, continue the 168-hour period following resumption of source operation. If the test period is interrupted because of monitor failure, restart the 168-hour period when the monitor becomes operational. During the operational test period, perform the following test procedures:

8.4.1 Zero Drift Test. At the outset of the 168-hour operational test period, record the initial simulated zero and upscale opacity readings (see example Figure 1–3). After each 24-hour interval check and record the final zero reading before any optional or required cleaning and adjustment. Zero and upscale calibration adjustments, optical surface cleaning, and optical realignment may be performed only at 24-hour intervals (or at such shorter intervals as the manufacturer's written instructions specify) but are optional. However, adjustments and/or cleaning must be performed when the accumulated zero calibration or upscale calibration drift exceeds the 24-hour drift specifications (±2 percent opacity). If no adjustments are made after the zero check the final zero reading is recorded as the initial reading for the next 24-hour period. If adjustments are made, the zero value after adjustment is recorded as the initial zero value for the next 24-hour period. If the instrument has an automatic zero compensation feature for dirt accumulation on exposed lens, and the zero value cannot be measured before compensation is entered then record the amount of automatic zero compensation for the final zero reading of each 24-hour period. (List the indicated zero values of the monitoring system in parenthesis.)

8.4.2 Upscale Drift Test. At each 24-hour interval, after the zero calibration value has been checked and any optional or required adjustments have been made, check and record the simulated upscale calibration value. If no further adjustments are made to the calibration system at this time, the final upscale calibration value is recorded as the initial upscale value for the next 24-hour period. If an instrument span adjustment is made, the upscale value after adjustment is recorded as the initial upscale for the next 24-hour period.

During the operational test period record all adjustments, realignments and lens cleanings.

9. Calculation, Data Analysis, and Reporting

9.1 Arithmetic Mean. Calculate the mean of a set of data as follows:

$$\bar{x} = \frac{1}{n}\sum_{i=1}^{n} x_i \qquad \text{Equation 2-1}$$

Where:

$\bar{x}$ = mean value.
n = number of data points.
Σx_i = algebraic sum of the individual measurements, x_i

9.2 Confidence Interval. Calculate the 95 percent confidence interval (two-sided) as follows:

$$C.I._{95} = \frac{t_{.975}}{n\sqrt{n-1}} \sqrt{n\,(\Sigma x_i^2) - (\Sigma x_i)^2} \qquad \text{Equation 2-2}$$

Where:

$C.I._{95}$ = 95 percent confidence interval estimate of the average mean value.
$t_{.975} = t_{(1-\alpha/2)}$.

Table 1-3—$t_{.975}$ Values

n	$t_{.975}$	n	$t_{.975}$	n	$t_{.975}$
2	12.706	7	2.447	12	2.201
3	4.303	8	2.365	13	2.179
4	3.182	9	2.306	14	2.160
5	2.776	10	2.262	15	2.145
6	2.571	11	2.228	16	2.131

The values in this table are already corrected for n-1 degrees of Freedom. Use n equal to the number of data points.

9.3 Conversion of Opacity Values from Monitor Pathlength to Emission Outlet Pathlength. When the monitor pathlength is different than the emisson outlet pathlength, use either of the following equations to convert from one basis to the other (this conversion may be automatically calculated by the monitoring system):

$$\log(1-Op_2) = (L_2/L_1)\,\mathrm{Log}\,(1-Op_1) \qquad \text{Equation 1-4}$$

$$D_2 = (L_2/L_1) \qquad \text{Equation 1-5}$$

Where:

Op_1 = opacity of the effluent based upon L_1
Op_2 = opacity of the effluent based upon L_2
L_1 = monitor pathlength
L_2 = emission outlet pathlength
D_1 = optical density of the effluent based upon L_1
D_2 = optical density of the effleunt based upon L_2

9.4 Spectral Response. Using the spectral data obtained in Section 6.1, develop the effective spectral response curve of the transmissometer. Then determine and report the peak spectral response wavelength, the mean spectral response wavelength, and the maximum response at any wavelength below 400 nm and above 700 nm expressed as a percentage of the peak response.

9.5 Angle of View. For the horizontal and vertical directions, using the data obtained in Section 6.2, calculate the response of the receiver as a function of viewing angle (21 centimeters of arc with a radius of 3 meters equal 4 degrees), report relative angle of view curves, and determine and report the angle of view.

9.6 Angle of Projection. For the horizontal and vertical directions, using the data obtained in Section 6.3, calculate the response of the photoelectric detector as a function of projection angle, report relative angle of projection curves, and determine and report the angle of projection.

9.7 Calibration Error. See Figure 1–1. If the pathlength is not adjusted by the measurement system, subtract the actual calibrated attenuator value from the value indicated by the measurement system recorder for each of the 15 readings obtained pursuant to Section 8.1.4. If the pathlength is adjusted by the measurement system subtract the "path adjusted" calibrated attenuator values from the values indecated by the measurement system recorder the "path adjusted" calibrated attenuator values are calculated using equation 1–4 or 1–5). Calculate the arithmetic mean difference and the 95 percent confidence interval of the five tests at each attenuator value using Equations 1–2 and 1–3. Calculate the sum of the absolute value of the mean difference and the 95 percent confidence interval for each of the three test attenuators; report these three values as the calibration error.

9.8 Zero and Upscale Calibration Drifts. Using the data obtained in Sections 8.4.1 and 8.4.2 calculate the zero and upscale calibration drifts. Then calculate the arithmetic means and the 95 percent confidence intervals using Equations 1–2 and 1–3. Calculate the sum of the absolute value of the mean and the 95 percent confidence interval and report these values as the 24-hour zero drift and the 24-hour calibration drift.

9.9 Response Time. Using the data collected in Section 8.1.5, calculate the mean time of the 10 upscale and downscale tests and report this value as the system response time.

9.10 Reporting. Report the following (summarize in tabular form where appropriate).

9.10.1 General Information.

a. Instrument Manufacturer.
b. Instrument Model Number.
c. Instrument Serial Number.

d. Person(s) responsible for operational and conditioning test periods and affiliation.

e. Facility being monitored.

f. Schematic of monitoring system measurement path location.

g. Monitor pathlength, meters.

h. Emission outlet pathlength, meters.

i. System span value, percent opacity.

j. Upscale calibration value, percent opacity.

k. Calibrated Attenuator values (low, mid, and high range), percent opacity.

9.10.2 Design Specification Test Results

a. Peak spectral response, nm.

b. Mean spectral response, nm.

c. Response above 700 nm, percent of peak.

d. Response below 400 nm, percent of peak.

e. Total angle of view, degrees.

f. Total angle of projection, degrees.

9.10.3 Operational Test Period Results.

a. Calibration error, high-range, percent opacity.

b. Calibration error, mid-range, percent opacity.

c. Calibration error, low-range, percent opacity.

d. Response time, seconds.

e. 24-hour zero drift, percent opacity.

f. 24-hour calibration drift, percent opacity.

g. Lens cleaning, clock time.

h. Optical alignment adjustment, clock time.

9.10.4 Statements. Provide a statement that the conditioning and operational test periods were completed according to the requirements of Sections 8.3 and 8.4. In this statement, include the time periods during which the conditioning and operational test periods were conducted.

9.10.5 Appendix. Provide the data tabulations and calculations for the above tabulated results.

9.11 Retest. If the continuous monitoring system operates within the specified performance parameters of Table 1-1, the operational test period will be successfully concluded. If the continuous monitoring system fails to meet any of the specified performance parameters, repeat the operational test period with a system that meets the design specifications and is expected to meet the performance specifications.

10. Bibliograpny.

10.1 "Experimental Statistics," Department of Commerce, National Bureau of Standards Handbook 91, 1963, pp. 3-31, paragraphs 3-3.1.4.

10.2 "Performance Specifications for Stationary-Source Monitoring Systems for Gases and Visible Emissions," Environmental Protection Agency, Research Triangle Park, N. C., EPA-650/2-74-013, January 1974.

BILLING CODE 6560-01-M

Person Conducting Test _____ Analyzer Manufacturer _____

Affiliation _____ Model/Serial No. _____

Date _____ Location _____

Monitor Pathlength, L_1 _____ Emission Outlet Pathlength, L_2 _____

Monitoring System Output Pathlength Corrected? Yes ____ No ____

Calibrated Neutral Density Filter Values

Actual Optical Density (Opacity):

Low Range _____ (_____)

Mid Range _____ (_____)

High Range _____ (_____)

Path Adjusted Optical Density (opacity)

Low Range _____ (_____)

Mid Range _____ (_____)

High Range _____ (_____)

Run Number	Calibration Filter Value (Path Adjusted Percent Opacity)	Instrument Reading (Percent Opacity)	Arithmetic Difference (% Opacity)		
			Low	Mid	High
1 – Low				–	–
2 – Mid			–		–
3 – High			–	–	
4 – Low				–	–
5 – Mid			–		–
6 – High			–	–	
7 – Low				–	–
8 – Mid			–		–
9 – High			–	–	
10–Low				–	–
11–Mid			–		–
12–High			–	–	
13–Low				–	–
14–Mid			–		–
15–High			–	–	–
Arithmetic Mean (Equation 1 – 2): A					
Confidence Interval (Equation 1 – 3): B					
Calibration Error $\lvert A \rvert + \lvert B \rvert$					

Figure 1 – 1. Calibration error determination

Person Conducting Test _____ Analyzer Manufacturer _____

Affiliation _____ Model/Serial No. _____

Date _____ Location _____

High Range Calibration Filter Value: Actual Optical Density (Opacity) _____(_____)

Path Adjusted Optical Density (Opacity) _____(_____)

Upscale Response Value (0.95 x filter value) _____ percent opacity

Downscale Response Value (0.05 x filter value) _____ percent opacity

Upscale	1	_____ seconds
	2	_____ seconds
	3	_____ seconds
	4	_____ seconds
	5	_____ seconds
Downscale	1	_____ seconds
	2	_____ seconds
	3	_____ seconds
	4	_____ seconds
	5	_____ seconds
Average response		_____ seconds

Figure 1-2. Response Time Determination

Person Conducting Test _____ Analyzer Manufacturer _____

Affiliation _____ Model/ Serial No. _____

Date _____ Location _____

Monitor Pathlength, L_1 _____ Emission Outlet Pathlength, L_2 _____

Monitoring System Output Pathlength Corrected: ? Yes _____ No _____

Upscale Calibration Value : Actual Optical Density (Opacity) _____ (_____)

Path Adjusted Optical Density (Opacity) _____ (_____)

Date	Time		Percent Opacity										Align-ment	
			Zero Reading*		Zero Drift	zero adjusted?	Upscale Calibration Reading		Upscale Drift	Cali-bration Drift	span adjusted?	lens cleaned?	checked?	adjusted?
	Begin	End	Initial A	Final B	C = B–A		Initial D	Final E	F = E–D	G = F–C**				

Arithmetic Mean (Eq. 1–2)			
Confidence Interval (Eq. 1–3)			
Zero Drift		Calibration Drift	

*without automatic zero compensation

**if zero was adjusted (manually or automatically) prior to upscale check, then use c = 0.

Figure 1 - 3. Zero Calibration Drift Determination

BILLING CODE 6560-01-C

Performance Specification 2—Specifications and Test Procedures for SO_2 and NO_x Continuous Monitoring Systems in Stationary Sources

1. Applicability and Principle

1.1 Applicability. This Specification contains (a) installation requirements, (b) instrument performance and equipment specifications, and (c) test procedures and data reduction procedures for evaluating the acceptability of SO_2 and NO_x continuous monitoring systems, which may include, for certain stationary sources, diluent monitors. The test procedures in item (c), above, are not applicable to single-pass, in-situ continuous monitoring systems; these systems will be evaluated on a case-by-case basis upon written request to the Administrator and alternative test procedures will be issued separately.

1.2 Principle. Any SO_2 or NO_x continuous monitoring system that is expected to meet this Specification is installed, calibrated, and operated for a specified length of time. During this specified time period, the continuous monitoring system is evaluated to determine conformance with the Specification.

2. Definitions

2.1 Continuous Monitoring System. The total equipment required for the determination of a gas concentration or a gas emission rate. The system consists of the following major sub-systems:

2.1.1 Sample Interface. That portion of a system that is used for one or more of the following: sample acquisition, sample transportation, sample conditioning, or protection of the monitor from the effects of the stack effluent.

2.1.2. Pollutant Analyzer. That portion of the system that senses the pollutant gas and generates an output that is proportional to the gas concentration.

2.1.3. Diluent Analyzer (if applicable). That portion of the system that senses the diluent gas (e.g., CO_2 or O_2) and generates an output that is proportional to the gas concentration.

2.1.4 Data Recorder. That portion of the monitoring system that provides a permanent record of the analyzer output. The data recorder may include automatic data reduction capabilities.

2.2 Types of Monitors. Continuous monitors are categorized as "extractive" or "in-situ," which are further categorized as "point," "multipoint," "limited-path," and "path" type monitors or as "single-pass" or "double-pass" type monitors.

2.2.1 Extractive Monitor. One that withdraws a gas sample from the stack and transports the sample to the analyzer.

2.2.2 In-situ Monitor. One that senses the gas concentration in the stack environment and does not extract a sample for analysis.

2.2.3 Point Monitor. One that measures the gas concentration either at a single point or along a path which is less than 10 percent of the length of a specified measurement line.

2.2.4 Multipoint Monitor. One that measures the gas concentration at 2 or more points.

2.2.5 Limited-Path Monitor. One that measures the gas concentration along a path, which is 10 to 90 percent of the length of a specified measurement line.

2.2.6 Path Monitor. One that measures the gas concentration along a path, which is greater than 90 percent of the length of a specified measurement line.

2.2.7 Single-Pass Monitor. One that has the transmitter and the detector on opposite sides of the stack or duct.

2.2.8 Double-Pass Monitor. One that has the transmitter and the detector on the same side of the stack or duct.

2.3 Span Value. The upper limit of a gas concentration measurement range which is specified for affected source categories in the applicable subpart of the regulations.

2.4 Calibration Gases. A known concentration of a gas in an appropriate diluent gas.

2.5 Calibration Gas Cells or Filters. A device which, when inserted between the transmitter and detector of the analyzer, produces the desired output level on the data recorder.

2.6 Relative Accuracy. The degree of correctness including analytical variations of the gas concentration or emission rate determined by the continuous monitoring system, relative to the value determined by the reference method(s).

2.7 Calibration Error. The difference between the gas concentration indicated by the continuous monitoring system and the known concentration of the calibration gas, gas cell, or filter.

2.8 Zero Drift. The difference in the continuous monitoring system output readings before and after a stated period of operation during which no unscheduled maintenance, repair, or adjustment took place and when the pollutant concentration at the time of the measurements was zero (i.e., zero gas, or zero gas cell or filter).

2.9 Calibration Drift. The difference in the continuous monitoring system output readings before and after a stated period of operation during which no unscheduled maintenance, repair or adjustment took place and when the pollutant concentration at the time of the measurements was a high-level value (i.e., calibration gas, gas cell or filter).

2.10 Response Time. The amount of time it takes the continuous monitoring system to display on the data recorder 95 percent of a step change in pollutant concentration.

2.11 Conditioning Period. A minimum period of time over which the continuous monitoring system is expected to operate with no unscheduled maintenance, repair, or adjustments prior to initiation of the operational test period.

2.12 Operational Test Period. A minimum period of time over which the continuous monitoring system is expected to operate within the established performance specifications with no unscheduled maintenance, repair or adjustment.

3. Installation Specifications

Install the continuous monitoring system at a location where the pollutant concentration measurements are representative of the total emissions from the affected facility and are representative of the concentration over the cross section. Both requirements can be met as follows:

3.1 Measurement Location. Select an accessible measurement location in the stack or ductwork that is at least 2 equivalent diameters downstream from the nearest control device or other point at which a change in the pollutant concentration may occur and at least 0.5 equivalent diameters upstream from the effluent exhaust. Individual subparts of the regulations may contain additional requirements. For example, for steam generating facilities, the location must be downstream of the air preheater.

3.2 Measurement Points or Paths. There are two alternatives: The tester may choose either (a) to conduct the stratification check procedure given in Section 3.3 to select the point, points, or path of average gas concentration, or (b) to use the options listed below without a stratification check.

Note.—For the purpose of this section, the "centroidal area" is defined as a concentric area that is geometrically similar to the stack cross section and is no greater than 1 percent of the stack cross-sectional area.

3.2.1 SO_2 and NO_x Path Monitoring Systems. The tester may choose to centrally locate the sample interface (path) of the monitoring system on a measurement line that passes through the "centroidal area" of the cross section.

3.2.2 SO_2 and NO_x Multipoint Monitoring Systems. The tester may choose to space 3 measurement points along a measurement line that passes through the "centroidal area" of the stack cross section, at distances of 16.7, 50.0, and 83.3 percent of the way across it (see Figure 2-1).

BILLING CODE 6560-01-M

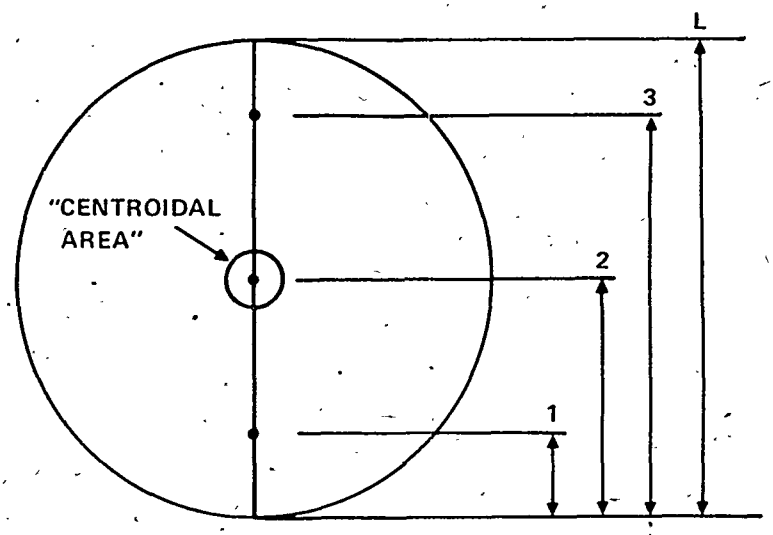

POINT NO.	DISTANCE (% OF L)
1	16.7
2	50.0
3	83.3

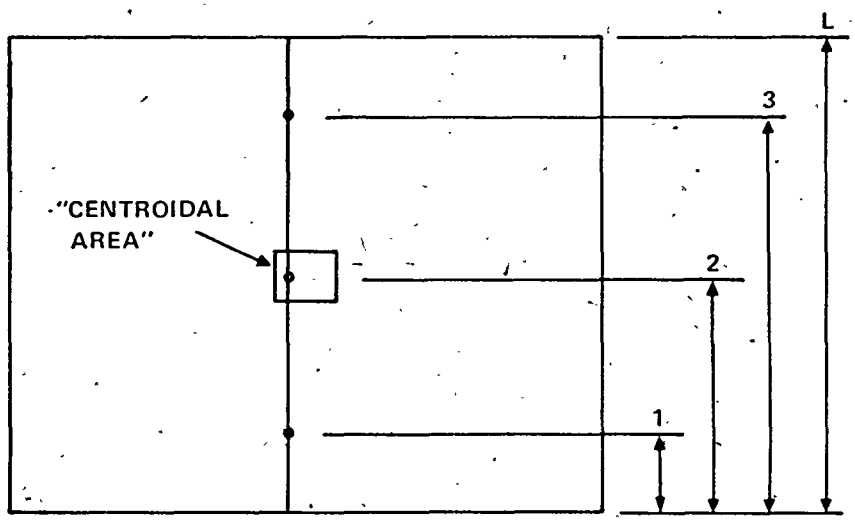

Figure 2-1. Location of an example measurement line (L) and measurement points.

BILLING CODE 6560-01-C

The following sampling strategies, or equivalent, for measuring the concentrations at the 3 points are acceptable: (a) The use of a 3-probe or a 3-hole single probe arrangment, provided that the sampling rate in each of the 3 probes or holes is maintained within 10 percent of their average rate (This option requires a procedure, subject to the approval of the Administrator, to demonstrate that the proper sampling rate is maintained); or (b) the use of a traversing probe arrangement, provided that a measurement at each point is made at least once every 15 minutes and all 3 points are traversed and sampled for equal lengths of time within 15 minutes.

3.2.3 SO_2 Single-Point and Limited-Path Monitoring Systems. Provided that (a) no "dissimilar" gas streams (i.e., having greater than 10 percent difference in pollutant concentration from the average) are combined upstream of the measurement location, and (b) for steam generating facilities, a CO_2 or O_2 cotinuous monitor is installed in addition to the SO_2 monitor, according to the guidelines given in Section 3.1 or 3.2 of Performance Specification 3, the tester may choose to monitor SO_2 at a single point or over a limited path. Locate the point in or centrally locate the limited path over the "centroidal area." Any other location within the inner 50 percent of the stack cross-sectional area that has been demonstrated (see Section 3.4) to have a concentration within 5 percent of the concentration at a point within the "centroidal area" may be used.

3.2.4 NO_x Single-Point and Limited-Path Monitoring Systems. For NO_x monitors, the tester may choose the single-point or limited-path option described in Section 3.2.3 only in coal-burning steam generators (does not include oil and gas-fired units) and nitric acid plants, which have no dissimilar gas streams combining upstream of the measurement location.

3.3 Stratification Check Procedure. Unless specifically approved in Section 3.2., conduct a stratification check and select the measurement point, points, or path as follows:

3.3.1 Locate 9 sample points, as shown in Figure 2–2, a or b. The tester may choose to use more than 9 points, provided that the sample points are located in a similar fashion as in Fgure 2–2.

3.3.2 Measure at least twice the pollutant and, if applicable (as in the case of steam generators), CO_2 or O_2 concentrations at each of the sample points. Moisture need not be determined for this step. The following methods are acceptable for the measurements: (a) Reference Methods 3 (grab-sample), 6 or 7 of this part; (b) appropriate instrumental methods which give relative responses to the pollutant (i.e., the methods need not be absolutely correct), subject to the approval of the Administrator; or (c) alternative methods subject to the approval of the Administrator. Express all measurements, if applicable, in the units of the applicable standard.

3.3.3 Calculate the mean value and select a point, points, limited-path, or path which gives an equivalent value to the mean. The point or points must be within, and the limited-path or path must pass through, the inner 50 percent of the stack cross-sectional area. All other locations must be approved by the Administrator.

BILLING CODE 6560-01-M

POINT NO.	DISTANCE (% OF D)
1, 9	10.0
2, 8	30.0
C	50.0
3, 7	70.0
4, 6	90.0

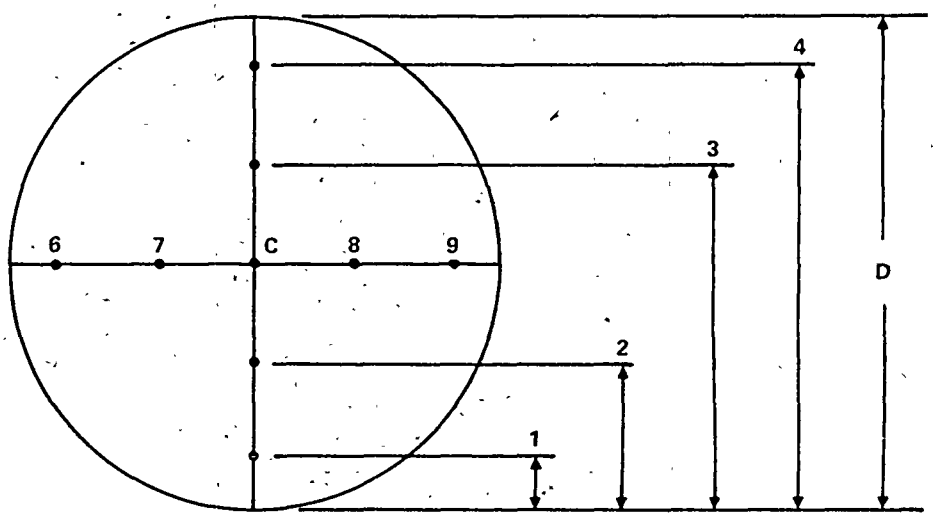

(a)

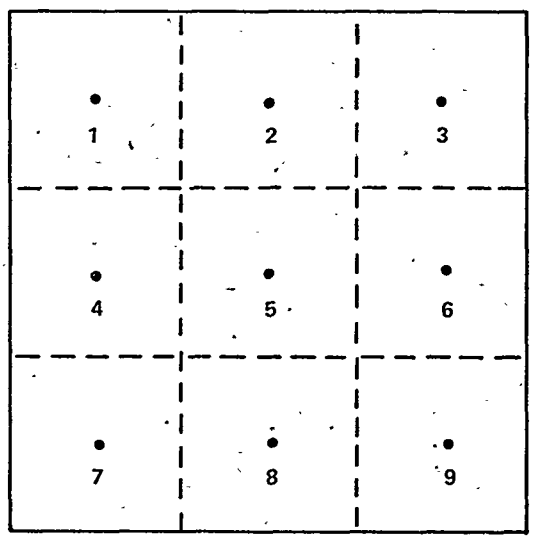

(b)

Figure 2-2. Location of 9 sampling points for stratification check.

BILLING CODE 6560-01-C

3.4 Acceptability of Single Point or Limited Path Alternative Location. Any of the applicable measurement methods mentioned in Section 3.3.2, above, may be used. Measure the pollutant and, if applicable, CO_2 or O_2 concentrations at both the centroidal area and the alternative locations. Moisture need not be measured for this test. Collect a 21-minute integrated sample or 3 grab-samples, either at evenly spaced (7 ± 2 min.) intervals over 21 minutes or all within 3 minutes, at each location. Run the comparative tests either concurrently or within 10 minutes of each other. Average the results of the 3 grab-samples.

Repeat the measurements until a minimum of 3 paired measurements spanning a minimum of 1 hour of process operation are obtained. Determine the average pollutant concentrations at the centroidal area and the alternative locations. If applicable, convert the data in terms of the standard for each paired set before taking the average. The alternative sampling location is acceptable if each alternative location value is within ± 10 percent of the corresponding centroidal area value and if the average at the alternative location is within 5 percent of the average of the centroidal area.

4. Performance and Equipment Specifications

The continuous monitoring system performance and equipment specifications are listed in Table 2-1. To be considered acceptable, the continuous monitoring system must demonstrate compliance with these specifications using the test procedures of Section 6.

5. Apparatus

5.1 Continuous Monitoring System. Use any continuous monitoring system of SO_2 or NO_x which is expected to meet the specifications in Table 2-1. For sources which are required to convert the pollutant concentrations to other emission units using diluent gas measurements, the diluent gas continuous monitor, as described in Performance Specification 3 of this Appendix, is considered part of the continuous monitoring system. The data recorder may be an analog strip chart recorder type or other suitable device with an input signal range compatible with the analyzer output.

5.2 Calibration Gases. For continuous monitoring systems that allow the introduction of calibration gases to the analyzer, the calibration gases may be SO_2 in air or N_2, NO in N_2, and NO_2 in air or N_2. Two or more calibration gases may be combined in the same gas cylinder, except do not combine the NO and air. For NO_x monitoring systems that oxidize NO to NO_2, the calibration gases must be in the form of NO. Use three calibration gas mixtures as specified below:

5.2.1 High-Level Gas. A gas concentration that is equivalent to 80 to 90 percent of the span value.

Table 2-1.—*Continuous Monitoring System Performance and Equipment Specifications*

Parameter	Specification
1. Conditioning period [a].	≥168 hours.
2. Operational test period [a].	≥168 hours.
3. Calibration error [b].	≤5 pct of each mid-level and high-level calibration value.
4. Response time	≤15 minutes (5 minutes for 3-point traversing probe arrangement).
5. Zero drift (2-hour) [b,c].	≤2 pct of span value.
6. Zero drift (24-hour) [b,c].	≤2 pct of span value.
7. Calibration drift (2-hour) [b].	≤2 pct of span value.
8. Calibration drift (24-hour) [b].	≤2.5 pct of span value.
9. Relative accuracy [b]	≤20 pct of the mean value of reference method(s) test data in terms of emission standard or 10 percent of the applicable standard, whichever is greater.
10. Calibration gas cells or filters.	Must provide a check of all analyzer internal mirrors and lenses and all electronic circuitry including the radiation source and detector assembly which are normally use in sampling and analysis.
11. Data recorder chart resolution.	Chart scales must be readable to within ≤0.50 pct of full-scale.
12. Extractive systems with diluent monitors.	Must use the same sample interface to sample both the pollutant and diluent gases. Place in series (diluent after pollutant analyzer) or use a "T." [a] During the conditioning and operational test periods, the continuous monitoring system shall not require any corrective maintenance, repair, replacement, or adjustment other than that clearly specified as routine and required in the operation and maintenance manuals. [b] Expressed as the sum of the absolute mean value plus the 95 percent confidence interval of a series of tests divided by a reference value. [c] A low-level (5-15 percent of span value) drift test may be substituted for the zero Drift tests.

5.2.2 Mid-Level Gas. A gas concentration that is equivalent to 45 to 55 percent of the span value.

5.2.3 Zero Gas. A gas concentration of less than 0.25 percent of the span value. Ambient air may be used for the zero gas.

5.3 Calibration Gas Cells or Filters. For continuous monitoring systems which use calibration gas cells or filters, use three certified calibration gas cells or filters as specified below:

5.3.1 High-Level Gas Cell or Filter. One that produces an output equivalent to 80 to 90 percent of the span value.

5.3.2 Mid-Level Gas Cell or Filter. One that produces an output equivalent to 45 to 55 percent of the span value.

5.3.3 Zero Gas Cell or Filter. One that produces an output equivalent to zero. Alternatively, an analyzer may produce a zero value check by mechanical means, such as a movable mirror.

5.4 Calibration Gas—Gas Cell or Filter Combination. Combinations of the above may be used.

6. Performance Specification Test Procedures.

6.1 Pretest Preparation.

6.1.1 Calibration Gas Certification. The tester may select one of the following alternatives: (a) The tester may use calibration gases prepared according to the protocol defined in Citation 10.5, i.e. These gases may be used as received without reference method analysis (obtain a statement from the gas cylinder supplier certifying that the calibration gases have been prepared according to the protocol); or (b) the tester may use calibration gases not prepared according to the protocol. In case (b), he must perform triplicate analyses of each calibration gas (mid-level and high-level, only) within 2 weeks prior to the operational test period using the appropriate reference methods. Acceptable procedures are described in Citations 10.6 and 10.7. Record the results on a data sheet (example is shown in Figure 2-3). Each of the individual analytical results must be within 10 percent (or 15 ppm, whichever is greater) of the average; otherwise, discard the entire set and repeat the triplicate analyses. If the average of the triplicate reference method test results is within 5 percent of the calibration gas manufacturer's tag value, use the tag value; otherwise, conduct at least 3 additional reference method test analyses until the results of 6 individual runs (the 3 original plus 3 additional) agree within 10 percent or 15 ppm, whichever is greater, of the average. Then use this average for the cylinder value.

Figure 2-3. Analysis of Calibration Gases[a]

Date_____(Must be within 2 weeks prior to the operational test period)

Reference Method Used_____

Sample Run	Mid-level[b] ppm	High-level[c] ppm
1		
2		
3		
Average		
Maximum % Deviation[d]		

[a] Not necessary if the protocol in Citation 10.5 is used to prepare the gas cylinders.

[b] Average must be 45 to 55 percent of span value.

[c] Average must be 80 to 90 percent of span value.

[d] Must be $\leq \pm$ 10 percent of applicable average or 15 ppm, whichever is greater.

6.1.2 Calibration Gas Cell or Filter Certification. Obtain (a) a statement from the manufacturer certifying that the calibration gas cells or filters (zero, mid-level, and high-level) will produce the stated instrument responses for the continuous monitoring system, and (b) a description of the test procedure and equipment used to calibrate the cells or filters. At a minimum, the manufacturer must have calibrated the gas cells or filters against a simulated source of known concentration.

6.2 Conditioning Period. Prepare the monitoring system for operation according to the manufacturer's written instructions. At the outset of the conditioning period, zero and span the system. Use the mid-level calibration gas (or gas cell or filter) to set the span at 50 percent of recorder full-scale. If necessary to determine negative zero drift, offset the scale by 10 percent. (Do not forget to account for this when using the calibration curve.) If a zero offset is not possible or is impractical, a low-level drift may be substituted for the zero drift, by using a low-level (5 to 15 percent of span value) calibration gas (or gas cell or filter). This low-level calibration gas (or gas cell or filter) need not be certified. Operate the continuous monitoring system for an initial 168-hour period in the manner specified by the manufacturer. Except during times of instrument zero, calibration checks, and system backpurges, the continuous monitoring system shall collect and condition the effluent gas sample (if applicable), analyze the sample for the appropriate gas constituents, and produce a permanent record of the system output. Conduct daily zero and mid-level calibration checks and, when drift exceeds the daily operating limits, make adjustments. The data recorder shall reflect these checks and adjustments. Keep a record of any instrument failure during this time. If the conditioning period is interrupted because of source breakdown (record the dates and times of process shutdown), continue the 168-hour period following resumption of source operation. If the conditioning period is interrupted because of monitor failure, restart the 168-hour conditioning period when the monitor becomes functional.

6.3 Operational Test Period. Operate the continuous monitoring system for an additional 168-hour period. The continuous monitoring system shall monitor the effluent, except during periods when the system calibration and response time are checked or during system backpurges; however, the system shall produce a permanent record of all operations. Record any system failure during this time on the data recorder output sheet.

It is not necessary that the 168-hour operational test period immediately follow the 168-hour conditioning period. During the operational test period, perform the following test procedures:

6.3.1 Calibration Error Determination. Make a total of 15 nonconsecutive zero, mid-level, and high-level measurements (e.g., zero, mid-level, zero, high-level, mid-range, etc.).

This will result in a set of 5 each of zero, mid-level, and high-level measurements. Convert the data output to concentration units, if necessary, and record the results on a data sheet (example is shown in Figure 2–4). Calculate the differences between the reference calibration gas concentrations and the measurement system reading. Then calculate the mean, confidence interval, and calibration errors separately for the mid-level and high-level concentrations using Equations 2–1, 2–2, and 2–3. In Equation 2–3, use each respective calibration gas concentration for R.V.

BILLING CODE 6560-01-M

Figure 2-4. Calibration Error Determination

Run no.	Calibration gas concentration[a] ppm	Measurement system reading ppm	Arithmetic differences ppm	
	A	B	A-B	
			Mid	High
1				
2				
3				
4				
5				
6				
7				
8				
9				
10				
11				
12				
13				
14				
15				
Arithmetic Mean (Eq. 2-1) =				
Confidence Interval (Eq. 2-2) =				
Calibration Error (Eq. 2-3)[b] =				

[a] Calibration Data from Section 6.1.1 or 6.1.2

Mid-level: C = _____ppm

High-level: D = _____ppm

[b] Use C or D as R.V. in Eq. 2-3

Figure 2-5. Response Time

Date_____ High-level = _____ppm

Test Run	Upscale min.	Downscale min.
1		
2		
3		
Average	A =	B =

System Response Time (slower of A and B) = _____ min.

BILLING CODE 6560-01-C

6.3.2 Response Time Test Procedure. At a minimum, each response time test shall provide a check of the entire sample transport line (if applicable), any sample conditioning equipment (if applicable), the pollutant analyzer, and the data recorder. For in-situ systems, perform the response time check by introducing the calibration gases at the sample interface (if applicable), or by introducing the calibration gas cells or filters at an appropriate location in the pollutant analyzer. For extractive monitors, introduce the calibration gas at the sample probe inlet in the stack or at the point of connection between the rigid sample probe and the sample transport line. If an extractive analyzer is used to monitor the effluent from more than one source, perform the response time test for each sample interface.

To begin the response time test, introduce zero gas (or zero cell or filter) into the continuous monitor. When the system output has stabilized, switch to monitor the stack effluent and wait until a "stable value" has been reached. Record the upscale response time. Then, introduce the high-level calibration gas (or gas cell or filter). Once the system has stabilized at the high-level concentration, switch to monitor the stack effluent and wait until a "stable value" is reached. Record the downscale response time. A "stable value" is equivalent to a change of less than 1 percent of span value for 30 seconds or 5 percent of measured average concentration for 2 minutes. Repeat the entire procedure three times. Record the results of each test on a data sheet (example is shown in Figure 2–5). Determine the means of the upscale and downscale response times using Equation 2–1. Report the slower time as the system response time.

6.3.3 Field Test for Zero Drift and Calibration Drift. Perform the zero and calibration drift tests for each pollutant analyzer and data recorder in the continuous monitoring system.

6.3.3.1 Two-hour Drift. Introduce consecutively zero gas (or zero cell or filter) and high-level calibration gas (or gas cell or filter) at 2-hour intervals until 15 sets (before and after) of data are obtained. Do not make any zero or calibration adjustments during this time unless otherwise prescribed by the manufacturer. Determine and record the amount that the output had drifted from the recorder zero and high-level value on a data sheet (example is shown in Figure 2–6). The 2-hour periods over which the measurements are conducted need not be consecutive, but must not overlap. Calculate the zero and calibration drifts for each set. Then calculate the mean, confidence interval, and zero and calibration drifts (2-hour) using Equations 2–1, 2–2, and 2–3. In Equation 2–3, use the span value for R.V.

6.3.3.2 Twenty-Four Hour Drift. In addition to the 2-hour drift tests, perform a series of seven 24-hour drift tests as follows: At the beginning of each 24-hour period, calibrate the monitor, using mid-level value. Then introduce the high-level calibration gas (or gas cell or filter) to obtain the initial reference value. At the end of the 24-hour period, introduce consecutively zero gas (or gas cell or filter) and high-level calibration gas (or gas cell or filter); do not make any adjustments at this time. Determine and record the amount of drift from the recorder zero and high-level value on a data sheet (example is shown in Figure 2–7). Calculate the zero and calibration drifts for each set. Then calculate the mean, confidence interval, and zero and calibration drifts (24-hour) using Equations 2–1, 2–2, and 2–3. In Equation 2–3, use the span value for R.V.

BILLING CODE 6560-01-M

Data set no.	Date	Time		Zero Rdg		Zero drift	Hi-level Rdg		Span drift	Calib. drift
		Begin	End	Init. A	Fin. B	C=B-A	Init. D	Fin. E	F=E-D	G=F-C
1										
2										
3										
4										
5										
6										
7										
8										
9										
10										
11										
12										
13										
14										
15										
Arithmetic Mean (Eq. 2-1)										
Confidence Interval (Eq. 2-2)										
Zero Drift[a]							Calibration drift[a]			

[a] Use Equation 2-3, with span value for R. V.

Figure 2-6. Zero and Calibration Drift (2 hour)

BILLING CODE 6560-01-C

Data set no.	Date	Time		Zero Rdg		Zero drift	Hi-level Rdg		Span drift	Calib. drift
		Begin	End	Init. A	Fin. B	C=B-A	Init. D	Fin. E	F=E-D	G=F-C
1										
2										
3										
4										
5										
6										
7										
Arithmetic Mean (Eq. 2-1)										
Confidence Interval (Eq. 2-2)										
Zero drift							Calibration drift[a]			

[a] Use Equation 2-3, with the span value for R. V.

Figure 2-7. Zero and Calibration Drift (24-hour)

Note.—Automatic zero and calibration adjustments made by the monitoring system without operator intervention or initiation are allowable at any time. Manual adjustments, however, are allowable only at 24-hour intervals, unless a shorter time is specified by the manufacturer.

6.4 System Relative Accuracy. Unless otherwise specified in an applicable subpart of the regulations, the reference methods for SO_2, NO_x, diluent (O_2 or CO_2), and moisture are Reference Methods 6, 7, 3, and 4, respectively. Moisture may be determined along with SO_2 using Method 6. See Citation 10.8. Reference Method 4 is necessary only if moisture content is needed to enable comparison between the Reference Method and monitor values. Perform the accuracy test using the following guidelines:

6.4.1 Location of Pollutant Reference Method Sample Points. The following specifies the location of the Reference Method sample points which are on the same cross-sectional plane as the monitor's. However, any cross-sectional plane within 2 equivalent diameter of straight runs may be used, by using the projected image of the monitor on the selected plane in the following criteria.

6.4.1.1 For point monitors, locate the Reference Method sample point no further than 30 cm (or 5 percent of the equivalent diameter of the cross section, whichever is less) from the pollutant monitor sample point.

6.4.1.2 For multipoint monitors, locate each Reference Method sample traverse point no further than 30 cm (or 5 percent of the equivalent diameter of the cross section, whichever is less) from each corresponding pollutant monitor sample point.

6.4.1.3 For limited-path and path monitors, locate 3 sample points on a line parallel to the monitor path and no further than 30 cm (or 5 percent of the equivalent diameter of the cross section, whichever is less) from the centerline of the monitor path. The three points of the Reference Method shall correspond to points in the monitor path at 16.7, 50.0, and 83.3 percent of the effective length of the monitor path.

6.4.2 Location of Diluent and Moisture Reference Method Sample Points.

6.4.2.1 For sources which require diluent monitors in addition to pollutant monitors, locate each of the sample points for the diluent Reference Method measurements within 3 cm of the corresponding pollutant Reference Method sample point as defined in Sections 6.4.1.1, 6.4.1.2, or 6.4.1.3. In addition, locate each pair of diluent and pollutant Reference Method sample points no further than 30 cm (or 5 percent of the equivalent diameter of the cross section, whichever is less) from *both* the diluent and pollutant continuous monitor sample points or paths.

6.4.2.2 If it is necessary to convert pollutant and/or diluent monitor concentrations to a dry basis for comparison with the Reference data, locate each moisture Reference Method sample point within 3 cm of the corresponding pollutant or diluent Reference Method sample point as defined in Sections 6.4.1.1, 6.4.1.2, 6.4.1.3, or 6.4.2.1.

6.4.3 Number of Reference Method Tests.

6.4.3.1 For NO_x monitors, make a minimum of 27 NO_x Reference Method measurements, divided into 9 sets.

6.4.3.2 For SO_2 monitors, make a minimum of 9 SO_2 Reference Method tests.

6.4.3.3 For diluent monitors, perform one diluent Reference Method test for each SO_2 and/or NO_x Reference Method test(s).

6.4.3.4 For moisture determinations, perform one moisture Reference Method test for each or each set of pollutant(s) and diluent (if applicable) Reference Method tests.

Note.—The tester may choose to perform more than 9 sets of NO_x measurements or more than 9 SO_2 reference method diluent, or moisture tests. If this option is chosen, the tester may, at his discretion, reject up to 3 of the set or test results, so long as the total number of set or test results used to determine the relative accuracy is greater than or equal to 9. Report all data including rejected data.

6.4.4 Sampling Strategy for Reference Method Tests. Schedule the Reference Method tests so that they will not be in progress when zero drift, calibration drift, and response time data are being taken. Within any 1-hour period, conduct the following tests: (a) one set, consisting of 3 individual measurements, of NO_x and/or one SO_2; (b) one diluent, if applicable; and (c) one moisture (if needed). Whenever two or more reference tests (pollutant, diluent, and moisture) are conducted, the tester may choose to run all these reference tests within a 1-hour period. However, it is recommended that the tests be run concurrently or consecutively within a 4-minute interval if two reference tests employ grab sampling techniques. Also whenever an integrated reference test is run together with grab sample reference tests, it is recommended that the integrated sample be started one-sixth the test period before the first grab sample is collected.

In order to properly correlate the continuous monitoring system and Reference Method data, mark the beginning and end of each Reference Method test period (including the exact time of day) on the pollutant and diluent (if applicable) chart recordings. Use one of the following strategies for the Reference Method tests:

6.4.4.1 Single Point Monitors. For single point sampling, the tester may: (a) take a 21-minute integrated sample (e.g. Method 6, Method 4, or the integrated bag sample technique of Method 3); (b) take 3 grab samples (e.g. Method 7 or the grab sample technique of Method 3), equally spaced at 7-minute (±2 min) intervals (or one-third the test period); or (c) take 3 grab samples over a 3-minute test period.

6.4.4.2 Multipoint or Path Monitors. For multipoint sampling, the tester may either: (a) make a 21-minute integrated sample traverse, sampling for 7 minutes (±2 min) (or one-third the test period) at each point; or (b) take grab samples at each traverse point, scheduling the grab samples to that they are an equal interval (7±2 minutes) of time apart (or one-third the test period).

Note.—If the number of sample points is greater than 3, make appropriate adjustments to the individual sampling time intervals. At times NSPS performance test data may be used as part of the data base of the continuous monitoring relative accuracy tests. In these cases, other test periods as specified in the applicable subparts of the regulations may be used.

6.4.5 Correlation of Reference Method and Continuous Monitoring System Data. Correlate the continuous monitoring system data with the Reference Method test data, as to the time and duration of the Reference Method tests. To accomplish this, first determine from the continuous monitoring system chart recordings, the integrated average pollutant and diluent (if applicable) concentration(s) for each Reference Method test period. Be sure to consider system response time. Then, compare each integrated average concentration against the corresponding average concentration obtained by the Reference Method; use the following guidelines to make these comparisons:

6.4.5.1 If the Reference Method is an integrated sampling technique (e.g., Method 6), make a direct comparison of the Reference Method results and the continuous monitoring system integrated average concentration.

6.4.5.2 If the Reference Method is a grab-sampling technique (e.g., Method 7), first average the results from all grab-samples taken during the test period, and then compare this average value against the integrated value obtained from the continuous monitoring system chart recording.

6.5 Data Summary for Relative Accuracy Tests. Summarize the results on a data sheet; example is shown in figure 2–8. Calculate the arithmetic differences between the reference method and the continuous monitoring output sets. Then calculate the mean, confidence interval, and system relative accuracy, using Equation 2–1, 2–2, and 2–3. In Equation 2–3, use the average of the reference method test results for R.V.

7. Equations

7.1 Arithmetic Mean. Calculate the mean of a data set as follows:

$$\bar{x} = \frac{1}{n} \sum_{i=1}^{n} x_i \qquad \text{Equation 1-2}$$

Where:

x=arithmetic mean.
n=number of data points.
Σx_i=algebraic sum of the individual values, x_i.

When the mean of the differences of pairs of data is calculated, be sure to correct the data for moisture.

7.2 Confidence Interval. Calculate the 95 percent confidence interval (two-sided) as follows:

$$C.I._{95} = \frac{t_{.975}}{n\sqrt{n-1}} \sqrt{n\Sigma x_i^2 - (\Sigma x_i)^2} \qquad \text{Equation 1-3}$$

Where:

$C.I._{95}$=95 percent confidence interval estimate of mean value.
$t_{.975}=t_{(1-\alpha/2)}$ (see Table 2–2)

BILLING CODE 6560-01-M

Table 2-2.—*t*=*Values*

n*	$t_{.975}$	n*	$t_{.975}$	n*	$t_{.975}$
2	12.706	7	2.447	12	2.201
3	4.303	8	2.365	13	2.179
4	3.182	9	2.306	14	2.160
5	2.776	10	2.262	15	2.145
6	2.571	11	2.228	16	2.131

* The values in this table are already corrected for n–1 degrees of freedom. Use *n* equal to the number of individual values.

Run no.	Date and time	SO_2			NO_x [b]			CO_2 or O_2 [a]		SO_2 [a]			NO_x [a]		
		RM	M	Diff	RM	M	Diff	RM	M	RM	M	Diff	RM	M	Diff
		ppm [d]			ppm [d]			% [d]	% [d]	mass/GCV			mass/GCV		
1															
2															
3															
4															
5															
6															
7															
8															
9															
10															
11															
12															
Average															
Confidence Interval															
Accuracy [c]															

[a] For steam generators [b] Average of 3 samples [c] Use average of reference method test results for R.V.
[d] Make sure that RM and M data are on a consistent basis, either wet or dry

Figure 2-8. Relative accuracy determination

BILLING CODE 6560-01-C

7.3 Relative Accuracy. Calculate the relative accuracy of a set of data as follows:

$$R.A. = \frac{|\bar{x}| + |C.I._{95}|}{R.V.} \times 100 \quad \text{Equation 2-3}$$

Where: R. A. = relative accuracy

$|\bar{x}|$ = absolute value of the arithmetic mean (from Equation 2-1).

$|C.I._{95}|$ = absolute value of the 95 percent confidence interval (from Equation 2-2).

R.V. = reference value, as defined in Sections 6.3.1, 6.3.3.1, 6.3.3.2, and 6.5.

8. Reporting

At a minimum (check with regional offices for additional requirements, if any) summarize the following results in tabular form: calibration error for mid-level and high-level concentrations, the slower of the upscale and downscale response times, the 2-hour and 24-hour zero and calibration drifts, and the system relative accuracy. In addition, provide, for the conditioning and operational test periods, a statement to the effect that the continuous monitoring system operated continuously for a minimum of 168 hours each, except during times of instrument zero, calibration checks, system backpurges, and source breakdown, and that no corrective maintenance, repair, replacement, or adjustment other than that clearly specified as routine and required in the operation and maintenance manuals were made. Also include the manufacturer's certification statement (if applicable) for the calibration gas, gas cells, or filters. Include all data sheets and calculations and charts (data outputs), which are necessary to substantiate that the system met the performance specifications.

9. Retest

If the continuous monitoring system operates within the specified performance parameters of Table 2-1, the operational test period will be successfully concluded. If the continuous monitoring system fails to meet any of the specifications, repeat that portion of the testing which is related to the failed specification.

10. Bibliography

10.1 "Monitoring Instrumentation for the Measurement of Sulfur Dioxide in Stationary Source Emissions," Environmental Protection Agency, Research Triangle Park, N.C., February 1973.

10.2 "Instrumentation for the Determination of Nitrogen Oxides Content of Stationary Source Emissions," Environmental Protection Agency, Research Triangle Park, N.C., Volume 1, APTD-0847, October 1971; Volume 2, APTD-0942, January 1972.

10.3 "Experimental Statistics," Department of Commerce, Handbook 91, 1963, pp. 3-31, paragraphs 3-3.1.4.

10.4 "Performance Specifications for Stationary-Source Monitoring Systems for Gases and Visible Emissions," Environmental Protection Agency, Research Triangle Park, N.C., EPA-650/2-74-013, January 1974.

10.5 Traceability Protocol for Establishing True Concentrations of Gases Used for Calibration and Audits of Continuous Source Emission Monitors (Protocol No. 1). June 15, 1978. Environmental Monitoring and Support Laboratory, Office of Research and Development, U.S. EPA, Research Triangle Park, N.C. 27711.

10.6 Westlin, P. R. and J. W. Brown. Methods for Collecting and Analyzing Gas Cylinder Samples. Emission Measurement Branch, Emission Standards and Engineering Division, Office of Air Quality Planning and Standards, U.S. EPA, Research Triangle Park, N.C., July 1978.

10.7 Curtis, Foston. A Method for Analyzing NO_x Cylinder Gases—Specific Ion Electrode Procedure. Emission Measurement Branch, Emission Standards and Engineering Division, Office of Air Quality and Standards, U.S. EPA, Research Triangle Park, N.C., October 1978.

10.8 Stanley, Jon and P. R. Westlin. An Alternative Method for Stack Gas Moisture Determination. Emission Measurement Branch, Emission Standards and Engineering Division, Office of Air Quality Planning and Standards, U.S. EPA, Research Triangle Park, N.C., August 1978.

Performance Specification 3—Specifications and Test Procedures for CO_2 and O_2 Continuous Monitors in Stationary Sources

1. Applicability and Principle

1.1 Applicability. This Specification contains (a) installation requirements, (b) instrument performance and equipment specifications, and (c) test procedures and data reduction procedures for evaluating the acceptability of continuous CO_2 and O_2 monitors that are used as diluent monitors. The test procedures are primarily designed for systems that introduce calibration gases directly into the analyzer; other types of monitors (e.g., single-pass monitors, as described in Section 2.2.7 of Performance Specification 2 of this Appendix) will be evaluated on a case-by-case basis upon written request to the Administrator, and alternative procedures will be issued separately.

1.2 Principle. Any CO_2 or O_2 continuous monitor, which is expected to meet this Specification, is operated for a specified length of time. During this specified time period, the continuous monitor is evaluated to determine conformance with the Specification.

2. Definitions

The definitions are the same as those listed in Section 2 of Performance Specification 2.

3. Installation Specifications

3.1 Measurement Location and Measurement Points or Paths. Select and install the continuous monitor at the same sampling location used for the pollutant monitor(s). Locate the measurement points or paths as shown in Figure 3-1 or 3-2.

3.2 Alternative Measurement Location and Measurement Points or Paths. The diluent monitor may be

installed at a different location from that of the pollutant monitor, provided that the diluent gas concentrations at both locations differ by no more than 5 percent from that of the pollutant monitor location for CO_2 or the quantity, 20.9-percent O_2, for O_2. See Section 3.4 of Performance Specification 2 for the demonstration procedure.

4. Continuous Monitor Performance and Equipment Specifications

The continuous monitor performance and equipment specifications are listed in Table 3–1. To be considered acceptable, the continuous monitor must demonstrate compliance with these specifications, using the test procedures in Section 6.

5. Apparatus

5.1 CO_2 or O_2 Continuous Monitor. Use any continuous monitor, which is expected to meet this Specification. The data recorder may either be an analog strip-chart recorder or other suitable device having an input voltage range compatible with the analyzer output.

5.2 Calibration Gases. Diluent gases shall be air or N_2 for CO_2 mixtures, and shall be N_2 for O_2 mixtures. Use three calibration gases as specified below:

BILLING CODE 6560-01-M

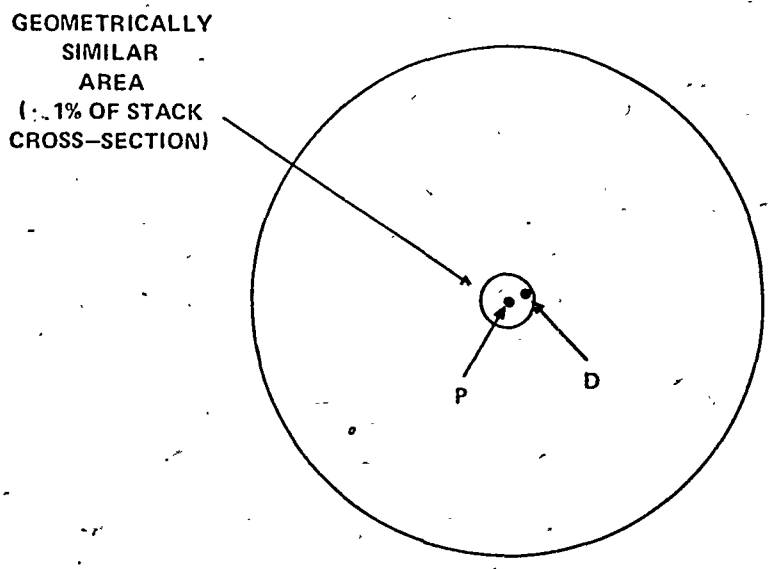

(a)

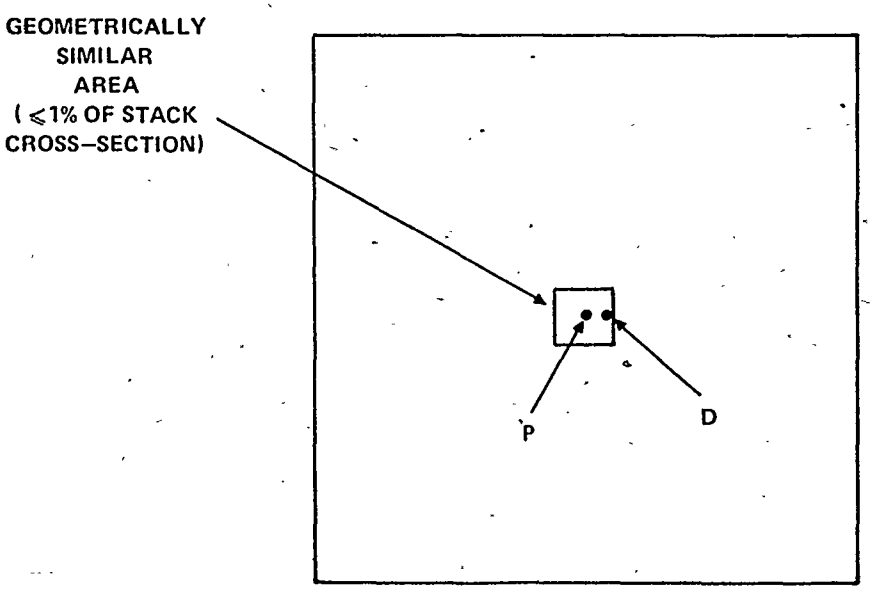

(b)

Figure 3-1. Relative locations of pollutant (P) and diluent (D) measurement points in (a) circular and (b) rectangular ducts. P is located at the centroid of the geometrically similar area. Note: The geometrically similar area need not be concentric.

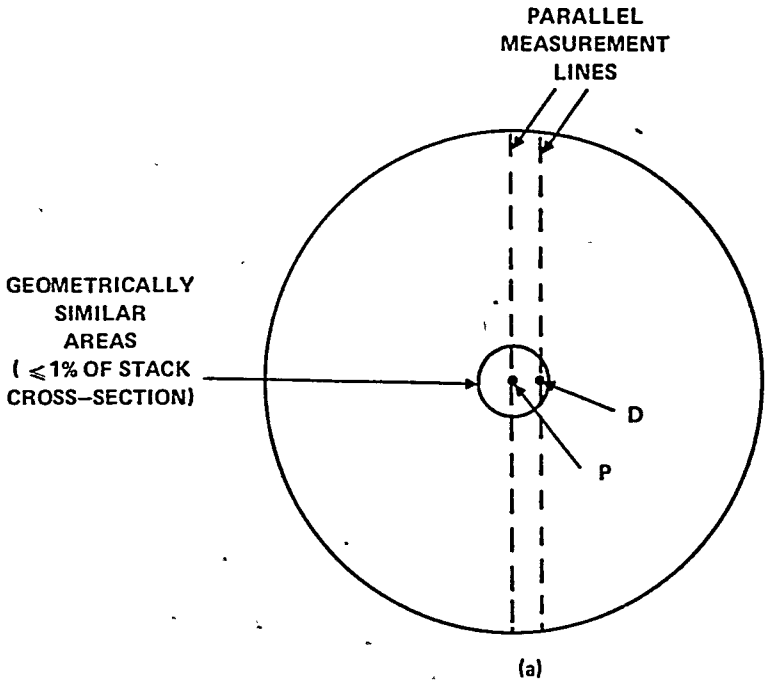

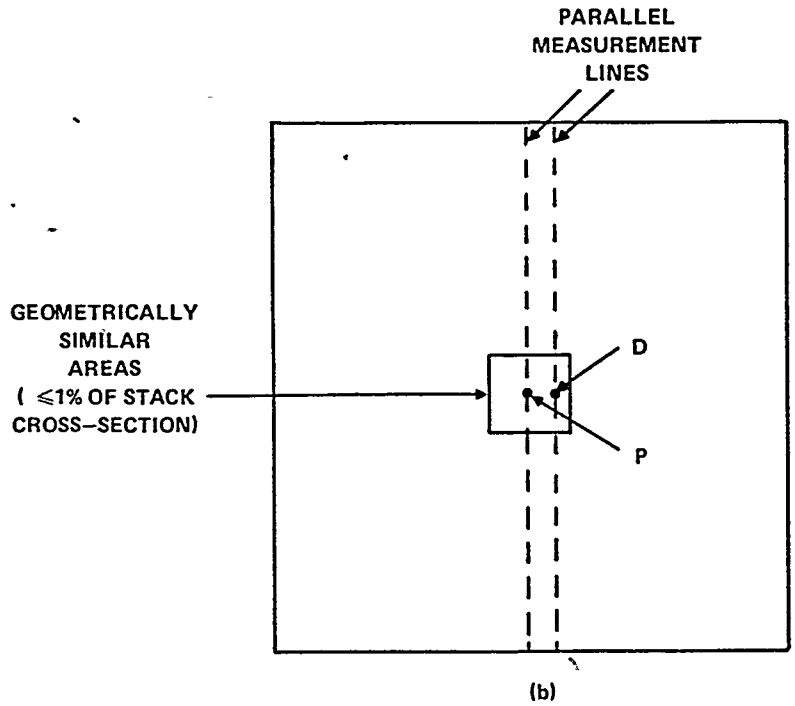

Figure 3-2. Relative locations of pollutant (P) and diluent (D) measurement paths for (a) circular and (b) rectangular ducts. P is located at the centroid of both the geometrically similar areas and the pollutant monitor path cross-sectional areas. D is located at the centroid of the diluent monitor path cross-sectional area.

BILLING CODE 6560-01-C

Table 3-1.—*Performance and Equipment Specifications*

Parameter	Specification
1. Conditioning period [a].	≥ 168 hours.
2. Operational test period [a].	≥ 168 hours.
3. Calibration error [b]...	≤ 5 pct. of each (mid-range and high-range, only) calibration gas value.
4. Reponse time.....	≤ 15 minutes.
5. Zero drift (2-hour) [b, c].	≤ 0.4 pct. CO_2 or O_2.
6. Zero drift (24-hour) [b, c].	≤ 10.5 pct. CO_2 or O_2.
7. Calibration drift (2-hour) [b].	≤ 0.4 pct. CO_2 or O_2.
8. Calibration drift (24-hour) [b].	≤ 0.5 pct. CO_2 or O_2.
9. Data recorder chart resolution.	Chart scales must be readable to within ≤ 0.50 pct. of full-scale.
10. Extractive monitors	Must use the same interface as the pollutant monitor. Place in a series (diluent after pollutant analyzer) or use a "T."

[a] During the conditioning and operational test periods, the continuous monitor shall not require any corrective maintenance, repair, replacement, or adjustment other than that clearly specified as routine and required in the operation and maintenance manuals.

[b] Expressed as the sum of the absolute mean value plus the 95 percent confidence interval of a series of tests.

[c] A low-level (5–15 percent of span value) drift tests may be substituted for the zero drift tests.

5.2.1 High-Level Gas. A CO_2 or O_2 concentration of 20.0 to 22.5 percent. For O_2 analyzers, ambient air (20.9 percent O_2) may be used as the high-range calibration gas; lower high-level O_2 concentration may be used, subject to the approval of the Administrator.

5.2.2 Mid-Level Gas. A CO_2 or O_2 concentration of 11.0 to 14.0 percent; for O_2 analyzers, concentrations in the operational range may be used.

5.2.3 Zero Gas. A CO_2 or O_2 concentration of less than 0.05 percent. For CO_2 monitors, ambient air (0.03 percent CO_2) may be used as the zero gas.

6. Performance Specification Test Procedures.

6.1 Calibration Gas Certification. Follow the procedure as outlined in Section 6.1.2 of Performance Specification 2, except use 0.5 percent CO_2 or O_2 instead of the 15 ppm. Figure 3–3 is provided as an example data sheet.

6.2 Conditioning Period. Follow the same procedure outlined in Section 6.2 of Performance Specification 2.

6.3 Operational Test Period. Follow the same procedures outlined in Section 6.3 of Performance Specification 2, to evaluate the calibration error, response time, and the 2-hour and 24-hour zero and calibration drifts. See example data sheets (Figures 3–4 through 3–7).

BILLING CODE 6560-01-M

Figure 3-3. Analysis of Calibration Gases[a]

Date_____ (Must be within 2 weeks prior to the operational test period)

Reference Method Used_____

Sample run	Mid-range[c] ppm	High-range[d] ppm
1		
2		
3		
Average		
Maximum % deviation[e]		

[a] Not necessary if the protocol in Citation 10.5 of Performance Specification 2 is used to prepare the gas cylinders.

[c] Average must be 11.0 to 14.0 percent; for O_2, see Section 5.2.2.

[d] Average must be 20.0 to 22.5 percent; for O_2, see Section 5.2.1.

[e] Must be $\leq \pm 10$ percent of applicable average or 0.5 percent, whichever is greater.

Figure 3-4. Calibration Error Determination

Run No.	Calibration Gas Concentration[a] ppm	Measurement System Reading ppm	Arithmetic Differences ppm	
	A	B	A-B	
			Mid	High
1				
2				
3				
4				
5				
6				
7				
8				
9				
10				
11				
12				
13				
14				
15				
Arithmetic Mean (Eq. 2-1)[b] =				
Confidence Interval (Eq. 2-2)[b] =				
Calibration Error (Eq. 2-3)[b,c] =				

[a] Calibration Data from Section 6.1

Mid-level: C = _____ ppm

High-level: D = _____ ppm

[b] See Performance Specification 2

[c] Use C or D as R. V.

Figure 3-5. Response Time

Date _____ High-Range = _____ ppm

Test Run	Upscale min	Downscale min
1		
2		
3		
Average	A =	B =

System Response Time (slower of A and B) = _____ min.

Data set no	Date	Time		Zero Rd.		Zero drift	Hi-Range Rdg.		Span drift	Calib. drift
		Begin	End	Init.	Fin.		Init.	Fin.		
				A	B	C=B-A	D	E	F=E-D	G=F-C
Arithmetic Mean (Eq. 2-1)[a]										
Confidence Interval (Eq. 2-2)[a]										
Zero drift[b]							Calibration drift[b]			

[a] From Performance Specification 2.

[b] Use Equation 2-3 of Performance Specification 2 and 1.0 for R. V.

Figure 3-6. Zero and Calibration Drift (2 hour)

Data set no.	Date	Time		Zero Rdg		Zero drift	Hi-Range Rdg		Span drift	Calib. drift
		Begin	End	Init.	Fin.		Init.	Fin.		
				A	B	C=B-A	D	E	F=E-D	G=F-C
Arithmetic Mean (Eq. 2-1)[a]										
Confidence Interval (Eq. 2-2)[a]										
Zero drift [b]							Calibration drift [b]			

[a] From Performance Specification 2.

[b] Use Equation 2-3 of Performance Specification 2, with 1.0 for R. V.

Figure 3-7. Zero and Calibration Drift (24-hour)

BILLING CODE 6560-01-C

6.4 System Relative Accuracy. [Note: The relative accuracy is not determined separately for the diluent monitor, but is determined for the pollutant-diluent system.] Unless otherwise specified in an applicable subpart of the regulations, the Reference Methods for the diluent concentration determination shall be Reference Method 3 for CO_2 or O_2. For this test, Fyrite analyses may be used for CO_2 and O_2 determinations. Perform the measurements using the guidelines below (an example data sheet is shown in Figure 2–8 of Performance Specification 2):

6.4.1 Location of Reference Method 3 Sampling Points. Locate the diluent Reference Method sampling points according to the guidelines given in Section 6.4.2.1 of Performance Specification 2.

6.4.2 Number of Reference Method Tests. Perform one Reference Method 3 test according to the guideline in Performance Specification 2.

6.4.3 Sampling Strategy for Reference Method Tests. Use the basic Reference Method sampling strategy outlined in Section 6.4.4 (and related sub-sections) of Performance Specification 2.

6.4.4 Correlation of Reference Method and Continuous Monitor Data. Use the guidelines given in Section 6.4.5 of Performance Specification 2.

7. Equations, Reporting, Retest, and Bibliography. The procedure and citations are the same as in Sections 7 through 10 of Performance Specification 2.

[FR Doc. 79-31033 Filed 10-9-79; 8:45 am]
BILLING CODE 6560-01-M

federal register

Wednesday
October 10, 1979

Part III

Department of the Interior

Bureau of Land Management

Simultaneous Oil and Gas Drawing Procedures

DEPARTMENT OF THE INTERIOR

Bureau of Land Management

43 CFR Part 3100

Simultaneous Oil and Gas Drawing Procedures

AGENCY: Bureau of Land Management, Interior.

ACTION: Proposed rulemaking.

SUMMARY: The Bureau of Land Management proposes regulations setting forth the procedures to be followed in a redrawing of simultaneous oil and gas lease drawing entry cards. This procedure is needed to standardize the redrawing procedures in those instances when initial drawing is invalidated.

DATE: Comments by: December 10, 1979.

ADDRESS: Send comments to: Director (650), Bureau of Land Management, 1800 C Street, N.W., Washington, D.C. 20240.

Comments will be available for examination in room 5555 of the above address during regular business hours (7:45 a.m.—4:15 p.m.).

FOR FURTHER INFORMATION CONTACT: Charles Weller, Division of Onshore Energy Resources, Bureau of Land Management, Department of the Interior, Washington, D.C. 20240, (202) 343-7753.

SUPPLEMENTARY INFORMATION: The regulations in 43 CFR 1821.2-3(b), 3110.1-6(b) and 3112.2-1(a)(3) provide for drawings to determine priorities of simultaneously filed documents, offers and applications. In the event that a properly filed oil and gas drawing entry card is omitted from a drawing, a redrawing is necessary. However, the simultaneous oil and gas leasing regulations have never explicitly provided for such redrawings.

From January 1960 until April 1964, the lands available under the simultaneous oil and gas drawing procedure were identified by legal subdivision, rather than by parcel numbers or leasing units. When conflicts existed among the applications (offers), all entries were drawn in order to assign a priority and a processing order.

In April 1964, the Bureau of Land Management began listing the available lands by parcels or leasing units and adopted the card form of application. Until August 1973, only one card was drawn for each parcel. At that time, the regulations were changed to provide for drawing three cards for each parcel or all the cards if less than that number were filed for any parcel.

A redrawing procedure is not required by either statute or regulation. It is an administrative procedure developed years ago and supported over the years by decisions of administrative appellate boards or offices within the Department as the proper interpretation of the regulations.

In a recent decision, *Milton D. Feinberg, Benson J. Lamp,* 37 IBLA 39 and 40 IBLA 222 (on Reconsideration) the Interior Board of Land Appeals held that the Bureau of Land Management's administrative practice of redrawing which allowed the results of the original drawing to stand unless the omitted entry was drawn as a replacement is contrary to the established Departmental policy that the first drawing is void and the priorities determined through the second drawing are controlling. The Bureau of Land Management's practice had been formally instituted by Instruction Memorandum No. 78-468, dated August 28, 1978. The Interior Board of Land Appeals held that a change in the procedure for redrawings must be accomplished by rulemaking (see 40 IBLA 222 at 230).

A redrawing which voids the original drawing is unfair to the applicant who receives a priority in the original drawing. The applicant of the omitted card receives the same chance of gaining a priority whether or not the original drawing is voided.

In most instances, before the necessity of redrawing becomes known, the cards have been returned to the unsuccessful applicants. The original entry cards cannot then be included in the second drawing. It would be administratively burdensome to restructure the drawing entry cards from microfilmed records.

Under the proposed procedure, a redrawing would be constructed of the omitted card(s) and blank cards representing those which were included in the original drawing. The results of the original drawing will stand unless an omitted card is drawn first, second or third at redrawing. Should this occur, the original drawing results will stand except the card chosen at redrawing will displace the priorities in the original drawing. For example, if the previously omitted card of Jane Smith is drawn second upon redrawing, her card will be given second priority. The card chosen at second priority and the card chosen at third priority in the original drawing will be moved to third and fourth priority. The point at which an omitted card is drawn will cause the original order of priority to slip one priority from that point on. This procedure gives the omitted entry an equal chance because it is competing against the same number of entries as if it had been in the original drawing.

Illustrative of the problems are situations which developed in the December drawings in Colorado and Montana. In Colorado, one card was inadvertently omitted from drawings on 16 parcels and two cards were omitted on another parcel. Each parcel attracted an average of 285 cards, ranging from a low of 37 cards to a high of 767 cards. In Montana, 629 cards were inadvertently omitted from 21 drawings. The number of omitted cards per drawing varied from 2 to 55. Each parcel attracted an average of 1,584 cards ranging from a low of 69 cards to a high of 4,360 cards.

By this proposed amendment, 43 CFR 3110.1-4(b) which allows an applicant to withdraw his drawing entry card prior to the drawing would be modified to prohibit withdrawal in a redrawing situaiton. This prohibition is designed to eliminate incidences of coercing or blackmailing the original drawing winners by omitted card offerors and has been in effect since the issuance of Instruction Memorandum No. 75-194, dated April 25, 1975.

These regulatory changes will apply to redrawings held after they became effective.

It is determined that publication of the proposed rulemaking does not require a detailed statement pursuant to section 102(2)(C) of the National Environmental Policy Act of 1969, and that the proposal does not constitute a significant rule requiring preparation of a regulatory analysis under 43 CFR Part 14 and Executive Order 12044.

The principal author of this document is Dale E. Zimmerman, Chief, Division of Onshore Energy Resources.

Under the authority of the Mineral Leasing Act of 1920, as amended, (30 U.S.C. 181 et seq.), and related laws, it is proposed to amend Part 3110, Group 3100, Subchapter C, Chapter II, Title 43 of the Code of Federal Regulations as follows:

1. Section 3110.1-4 is amended by amending paragraph (b) as follows:

§ 3110.1-4 Withdrawal of offer.

* * * * *

(b) *Simultaneous filings.* An applicant may withdraw his simultaneous drawing entry card prior to the drawing, except as provided in 3112.2-1(a)(5).

2. Section 3112.22-1(a) is amended by adding a new paragraph (5) as follows:

§ 3112.2-1 Offer to lease.

* * * * *

(a) * * *

* * * * *

(5) If a properly filed drawing entry card is omitted from the drawing, a new drawing shall be held. An omitted card may not be withdrawn by the applicant. The new drawing shall consist of the omitted card(s) and the number of blank cards equal to the number of cards which participated in the first drawing. Such drawing shall be conducted in the same manner as the original drawing. If the omitted card(s) is not drawn in the first, second, or third priority in the new drawing, the priority established in the original drawing shall stand. However, if an omitted card is drawn in the first, second, or third priority it shall displace the cards drawn with the same and lower priorities in the original drawing. No card chosen in the first drawing shall be eliminated from priority as a result, of the drawing of an omitted card in the redrawing. The number of priorities shall be increased as necessary.

October 4, 1979.

Guy R. Martin,

Assistant Secretary of the Interior.

[FR Doc. 79-31212 Filed 10-9-79; 8:45 am]

BILLING CODE 4310-84-M

Federal Register

Wednesday
October 10, 1979

Part IV

Environmental Protection Agency

National Emission Standards for Identifying, Assessing and Regulating Airborne Substances Posing a Risk of Cancer

ENVIRONMENTAL PROTECTION AGENCY

40 CFR Part 61

[FRL 1259-1]

National Emission Standards for Hazardous Air Pollutants; Policy and Procedures for Identifying, Assessing, and Regulating Airborne Substances Posing a Risk of Cancer

AGENCY: Environmental Protection Agency.

ACTION: Proposed rulemaking.

SUMMARY: This notice proposes for comment a rule governing the policies and procedures to be used by the Environmental Protection Agency in the identification, assessment, and regulation under the Clean Air Act of substances which, when emitted into the ambient air for stationary sources, increase the risk of cancer to the general population. The proposed policy implements for the air program of EPA the principles adopted by the President's Regulatory Council in a statement issued September 28, 1979 on the regulation of chemical carcinogens. In concert with this proposal, EPA is publishing elsewhere in today's Federal Register an advance notice of proposed rulemaking soliciting comments on draft generic work practice and operational standards which could be applied quickly to reduce emissions of airborne carcinogens from certain source categories.

Under the proposed policy, EPA would evaluate available information to identify those substances, including radioactive materials, which should be considered for regulation under the Clean Air Act as airborne carcinogens. Any air pollutant determined to present a significant carcinogenic risk to human health as a result of air emissions from one or more categories of stationary sources would be listed under section 112 as a hazardous air pollutant. Listing under section 112 would be accompanied, where applicable, by the proposal of generic standards for source categories producing or handling significant quantities of the substance. The generic standards would rapidly effect reasonable control of emissions while more detailed analyses are performed to establish priorities for further regulation, determine available control technology, and assess regulatory impacts.

Final standards for source categories presenting significant risks to public health would, as a minimum, require such sources to use best available technology to reduce emissions. If, however, the risk remaining after the application of best available technology is determined to be unreasonable, further control would be required. Unreasonable residual risk determinations would consider the risk remaining, the benefits conferred by the substance or activity, the distribution of those benefits versus the distribution of risks, the availability of substitutes, the costs of further control of the substance or source categories, and proposed sites in the case of new sources. Standards would be reviewed at no more than five-year intervals.

DATES: Written comments should be postmarked no later than February 7, 1980.

Notice of intent to appear at a public hearing should be postmarked no later than November 26, 1979. Hearing dates and locations, which will be held during the comment period, will be announced in the Federal Register.

Written comments responding to, supplementing, or rebutting written or oral comments received at public hearing must be made within 60 days of the hearing date.

ADDRESSES: All written comments should be addressed to: Central Docket Section, Room 2903B, Waterside Mall, 401 M Street, SW., Washington, D.C. 20460, ATTN: *OAQPS 79-14.*

EPA has established a rulemaking docket consistent with procedures established by section 307(d)(1)(N) of the Clean Air Act (42 U.S.C. 7607(d)). The docket number is *OAQPS 79-14* and it already contains the documents on which this proposal is based. All comments received during the comment period, as well as any other documents used in the promulgation of the final rule will be added to the docket promptly. The docket number should be on all written comments. The docket will be open for inspection at the Central Docket section at the above address between 8:00 a.m. and 4 p.m. Monday through Friday.

Notice of intent to appear at a public hearing should be directed to: Joseph Padgett, Director, Strategies and Air Standards Division (MD-12), Environmental Protection Agency, Research Triangle Park, North Carolina 27711.

Additional copies of this notice are available from: Industry Assistance Office, Office of Toxic Substances, U.S. EPA, 401 M Street, SW., Washington, D.C. 20460, 800-424-9065 (toll free) (202) 554-1404.

FOR FURTHER INFORMATION CONTACT: Joseph Padgett, Strategies and Air Standards Division, (919) 541-5204, FTS 629-5204.

SUPPLEMENTARY INFORMATION: *Availability of related information:* As described above, documents upon which this proposal is based are available for public inspection in the rulemaking docket (OAQPS 79-14). In addition to these materials, this notice includes a supplemental statement of basis and purpose containing further discussion of the legal basis for the proposed policy, various alternative control strategies considered, and comparisons with other carcinogen policy proposals. This statement follows the text of the proposed rule.

I. Background: The Need for a Policy and a Regulatory Mechanism

A. Introduction

The principal focus of the nation's air pollution control program to date has been the establishment and implementation of standards related to six major pollutant (particulate matter, sulfur oxides, ozone, nitrogen oxides, carbon monoxide, and lead). Recently, increasing attention has been directed towards those toxic components of air pollution which may not be adequately controlled by current programs. Pollutants that may contribute to the occurrence of human cancer have received particular attention because of the nature and seriousness of this group of diseases, and because of recent findings suggesting that a large number of airborne chemicals and radionuclides to which people are exposed may be implicated in cancer and other diseases related to genetic damage. *(1, 2, 3)*

B. The General Cancer Problem

The nature and magnitude of the cancer problem in the United States and the fact that radioactive agents and some chemicals can produce cancer in animals and humans have been well-documented and publicized.[1] Some of the more important aspects of the occurrence and causes of cancer and the role played by air pollution are briefly summarized below.

(1) Nature and Magnitude of the Problem *(4, 5, 6, 7, 8)*

Cancer is a group of diseases characterized by the unrestrained growth of cells that have somehow lost an essential self-regulatory mechanism. The uncontrolled growth of these cells eventually threatens the life of the host organism. Cancer is currently the second

[1] Detailed discussion of the general features of the problem have been presented by the Occupational Safety and Health Administration (*4*), the Consumer Product Safety Commission (*5*), and others (*6*).

leading cause of death in the United States. One American in four is expected to contact some form of cancer in his or her lifetime, and one in five is expected to die from the disease. The most recent statistics show a continued increase in total cancer incidence, due principally to increases in lung cancer.

The social, economic, and human costs of cancer are immense. Most forms of cancer are difficult if not impossbile to cure; less than one-half of all cancer patients live longer than five years from the discovery of their illness. The elusiveness of cures is due largely to the fact that cancer's basic biological mechanisms at the cellular level are not well understood. Approximately 1.8 billion dollars are spent each year for hospital care of cancer patients; significant additional costs not readily estimated include doctor's fees, out-patient therapy, and drug costs. In addition, it is estimated that 1.8 million work-years are lost annually because of cancer.

(2) Causes of Cancer: Importance of Environmental Factors

Studies of human cancer rates, their worldwide geographical variations, and observations of incidence rates in migrant populations have revealed that factors in the human environment are probably responsible for a large proportion of cancers. "Environmental factors" must be understood in the broad sense to include chemical exposures from smoking, diet, occupation, drinking water, and air pollution; various forms of radiation, including sunlight; and some forms of severe physical irritation. Although the uncertainties are great, estimates by the World Health Organization, other prominent institutions, and individual experts have suggested that 60 to 90 percent of all human cancers may be due to these factors. *(37, 9.)*

Studies of cancer incidence in particular groups have shown strong statistical relationships between exposure to certain chemical or radioactive substances and specific cancers. The connection between tobacco smoke and lung and other cancers is the most widely known.*(35)* Significant increases in leukemia and other forms of cancer have been noted among Japanese survivors of atomic bomb explosions during World War II. Markedly elevated cancer rates are found among certain occupational groups in the United States and other highly industrialized countries. In general, cancer rates are higher than average in urban areas.*(10)*

Unequivocal identification and quantification of the specific factors that lead singly or in combination with factors to specific forms of cancer in humans is, however, an extraordinarily difficult task. Observation from human experience is complicated by a number of factors. Purposeful experimentation of humans, for example, is ethically unacceptable, since the result would often be fatal. Definitive epidemiological studies of occupationally exposed groups are often difficult because the relatively small population exposed and inadequate information about duration, magnitude, and circumstances of exposures may not permit statistically reliable conclusions to be drawn. Studies of the cuases of cancer in the general population may be equivocal because of the complex modes of exposure, low exposure levels, and other complicating factors. In addition, synergistic and antagonistic interactions between chemicals substantially complicate any conclusions about the effects of a particular chemical.

Another major difficulty in the interepretation of such studies is the long latency period exposure to carcinogens and onset of the disease. Most cancers observed in today's population probably had their origins in exposures that began 15 to 40 years ago.*(36, 11)* Thus, epidemiological studies in current populations must involve estimation of historical exposures. The latency period also means that epidemiology cannot detect effects of relatively new substances until years of exposure have occurred.

To date, epidemiological studies have identified only 26 environmental agents believed to increase cancer risks in humans. *(12)*. The casual relationships implied by the statistical connections in these studies have generally been supported by controlled experiments on animals. With the possible exceptions of benzene and arsenic, those factors known to produce cancer in humans also produce cancer in test animals.*(34)* Animal experiments have also implicated many additional chemical substances as potential human carcinogens.

In addition to the potential that a substance acting alone may induce cancer, there is evidence that exposure to certain combinations of carcinogenic and non-carcinogenic agents may promote or potentiate the carcinogenic response. The disproportionate risk of lung caner to cigarette smokers occupationally exposed to asbestos fibers*(36, 37)* is an example of the synergism of two known human carcinogens. Non-carcinogenic and co-carcinogenic substances may also act to promote or enhance the human response to carcinogen exposure.

Although airborne carcinogens may induce cancer at a number of body sites, lung cancer is thought to be the principal form of cancer related to air pollution.*(15)* While cigarette smoking is probably the most important cause of lung cancer in the United States,*(16, 35)* many scientists believe that various air pollutants increase the risk of cancer from smoking and other carcinogenic insults. Available estimates also indicate that occupational exposures are responsible for a significant portion of lung cancer incidence in the United States*(10, 17)*.

Because of the difficulties inherent in studying the causes of cancer and the multifactorial nature of human exposures, the role of each major exposure pathway remains a matter of some debate. While factors such as smoking, occupational exposures, diet, and solar radiation are probably responsible for a greater proportion of cancers than ambient air pollution alone, (*10, 13, 14*) the dimensions of the problem posed by airborne carcinogens remain significant. Besides their contribution to cancers primarily related to other pathways, airborne carcinogens themselves pose risks to large numbers of people. In certain industrialized areas, especially, composite national figures may mask significantly higher air pollution-related cancer risks. And, in the vicinity of specific sources of carcinogenic emissions, risks to individuals can reach very high levels.

A preliminary EPA examination of chemical production, industries producing radioactive materials, and air sampling results has identified over fifty known or potential chemical carcinogens and numerous radioactive materials which may be emitted to the atmosphere. Many of these substances are synthetic organic chemicals that have been in commercial use only since the 1930's. (*18*) Since cancer induced by exposures to small amounts of airbone carcinogens may not appear for 15 to 40 years after exposure, it is still too early to detect the full impacts of these chemicals on human health. Thus, it is both prudent and, in view of the large number of people potentially affected, important to reduce or contain emissions of known or suspected atmospheric carcinogens in order to prevent future problems before they actually are observed.

C. Problems in Regulating Airborne Carcinogens

(1) Introduction

Although significant reductions in emissions of airborne carcinogens have resulted indirectly from control of pollutants such as particulate matter (*19*) and volatile organic chemicals (*20*) under sections 109 and 111 of the Clean Air Act,[2] EPA has taken direct regulatory action to control air carcinogens primarily under section 112.[3] Section 112, National Emission Standards for Hazardous Air Pollutants (NESHAPs), provides for the listing of pollutants which in the judgement of the Administrator cause or contribute to air pollution which may reasonably be anticipated to result in an increase in mortality or an increase in serious irreversible, or incapacitating reversible, illness. After a substance is listed as a hazardous air pollutant, EPA must establish control requirements for various source categories which emit the substance. The standards must, in the judgment of the Administrator, provide an ample margin of safety to protect the public health from such hazardous air pollutants. Carcinogens that have been listed under section 112 to date include asbestos, beryllium,[4] vinyl chloride, and benzene. A number of specific emission source categories of these substances have been regulated. (*21, 22*)

A number of scientific, technical, and policy problems have arisen which complicate the regulation of airborne carcinogens under section 112. Significant delays in establishing standards have been associated with determining the appropriate degree of control for certain sources of listed carcinogens. Although the determination of whether and to what degree a particular chemical presents a risk of cancer to humans has not yet been a significant source of delay under section 112, future disagreements are anticipated. This may be particularly true when dealing with substances for which epidemiological data are not available. These problems and their consequences are discussed in the following sections.

[2] 42 U.S.C. Sections 7409 and 7411.

[3] 42 U.S.C. Section 7412. Since the Clean Air Act provides for separate treatment of mobile source emissions under Title II, this policy addresses only air emissions from stationary sources. At this time, carcinogenic emissions from stationary sources appear to present a larger and more diverse public health problem than mobile source emissions.

[4] Beryllium was listed because of its non-carcinogenic toxic properties.

(2) Difficulty in Determining Carcinogenicity

The carcinogenic substances listed under section 112 to date were recognized as human carcinogens on the basis of epidemiological evidence. For most other chemical substances, however, such evidence will not be available, and other means of assessing carcinogenicity will have to be employed.

Protection of public health from current and future cancer risks therefore requires reliance on the results of laboratory tests, primarily involving animals, in the identification of probable human carcinogens. Practical limitations require that most animal tests be conducted with much smaller numbers of subjects than the human populations they represent, and at doses much higher than ambient exposure levels to improve the detectability of carcinogenic effects.

Evaluation of the carcinogenic risk to humans, based on such animal tests of candidate substances, raises a number of issues. Among these are the differences between species, extrapolation from the high doses administered to animals to the low concentrations present in the ambient air, differences in routes of exposure (e.g., ingestion versus inhalation), the significance of benign tumors, and the question of no-effect "thresholds" at lower exposures. Since animal testing is of key importance in carcinogen identification, policy decisions must be made and articulated on each of these issues.

(3) Problems Associated With the Large Number of Potential Air Carcinogens and Sources

Further difficulties in dealing with air pollution-related cancer result from the large number of potential atmospheric carcinogens and the correspondingly large number of sources emitting them. Preliminary analyses have identified a number of source types which may emit carcinogenic substances to the atmosphere. Most of these types fall into one of the following six broad groups: (1) mining, smelting, refining, manufacture and end-use of minerals and other inorganic chemicals; (2) combustion; (3) petroleum refining, distribution, and storage; (4) synthetic organic chemical industries and end-use applications, and waste disposal; (5) mining, processing, use, and disposal of radioactive substances and radioactive by-products; and (6) non-carcinogenic emissions which are chemically transformed into carcinogens in the atmosphere.

A survey of several thousand potential toxicants emitted from one broad category, the synthetic organic chemical industry, has identified over six hundred organic chemicals of possible concern. (*18*) Of these, over 140 showed some indication of possible carcinogenicity, mutagenicity, or teratogenicity. The results of a preliminary analysis of these substances suggest that as many as 40 of these substances are of concern as potential air carcinogens. (*29*) Although the synthetic organic chemical industry comprises the largest source grouping, a number of additional organic and inorganic air pollutants of concern, and a number of radioactive materials, are emitted from the other source categories.

Currently, EPA has only limited information on the emission rates, sources, and atmospheric concentrations of most potential airborne carcinogens. As a result of the generally low ambient concentrations expected from emissions of many of these substances, as well as their large number, source emissions testing and atmospheric monitoring programs will be more sophisticated and expensive, but less accurate or precise, then traditional air pollution monitoring. The resources necessary for developing such programs and for evaluating the health effects and control alternatives for this large number of substances and sources far exceed those currently available to EPA for the task. Clearly, priorities must therefore be established to maximize the public health benefits obtainable with existing resources.

(4) Difficulty in Determining the Appropriate Degree of Control

As noted above, a central problem in establishing standards and reqirements for air carcinogens under section 112 of the Clean Air Act has been determining the appropriate degree of control which should be required for significant source categories. The difficulty is related both to the characteristics of carcinogens and to the requirement of section 112 that the public health be protected with "an ample margin of safety."

As discussed above, most identifications of substances as probable human carcinogens have been based on studies of humans or animals exposed to relatively high doses of the substances. Whether the smaller doses generally encountered in the ambient environment cause cancer or, whether instead, some threshold or "safe" level of exposure may exist is a matter of considerable scientific debate. (*23*) EPA and other public health agencies and groups have, as a matter of prudent health policy, taken the position that in

the absence of identifiable effect thresholds, carcinogens pose some risk of cancer at any exposure level above zero. The existence of risk at any exposure level has created difficulty in setting required control levels. Some commenters have maintained that no risks should be permitted from emissions of carcinogens, while others argue that, in view of the uncertainty that any effect will occur at low exposure levels, only feasible and clearly cost-effective controls should be required.

This difficulty has been compounded by the language of section 112 itself, which calls for the establishment of standards which, in the judgment of the Administrator, provide "an ample margin of safety to protect the public health" from hazardous air pollutants. This language clearly mandates that the primary factor in standard-setting under section 112, in contrast to some other sections of the Act, such as section 111, be the protection of public health. How this mandate should be translated into standards for airborne carcinogens, however, is not clear. This uncertainty has led to delay and litigation, with some arguing that the *only* factor that may be considered is health effects, while others contend that EPA should simply balance risk against the cost of control and the benefits of the activity, giving all factors equal weight. While EPA has made limited statements (*21, 22*) of its view of section 112, the Administrator has not expressed a comprehensive interpretation of the provision as it applies to the regulation of carcinogens until now.

(5) EDF Petition

Citing concerns over the limited number of carcinogens listed as hazardous air pollutants to date and the regulatory delays encountered in controlling vinyl chloride, the Environmental Defense Fund (EDF), in November 1977, petitioned EPA to adopt a generic approach for classifying and regulating carcinogenic air pollutants under the Clean Air Act *(30)*.

The EDF proposal is patterned on the classification system proposed by OSHA and is based on scientific criteria similar to those articulated by CPSC, OSHA, and EPA for carcinogenicity determinations.[5] Suspect substances would be grouped into three categories (confirmed, probable, possible) based on the availability evidence of carcinogenicity. Under the main feature of the policy suggested by EDF, a determination that an air pollutant is a confirmed carcinogen would trigger the following responses: (a) immediate listing as a hazardous air pollutant under section 112; and (b) proposal and promulgation of regulations to (1) either ban the use of the material if a suitable substitute exists, or to require the application of emissions or equipment standards representing best available control technology; (2) establish a timetable leading to the reduction of emissions to zero at both existing and new sources; and (3) prevent any increase in emissions from additions to or replacements of existing facilities.

In March 1978, EPA conducted a public meeting to receive comments on the EDF proposal and any other suggestions regarding the Agency's regulatory process for the control of airborne carcinogens *(31, 32)*[6]. One major presentation made at that meeting was by the American Industrial Health Council (AIHC), advocating the use of a central board of non-governmental scientists for evaluating carcinogenicity and carcinogenic potency of substances of interest for all federal regulatory agencies *(33)*. The principles AIHC recommended for determination of carcinogenicity differ somewhat from those proposed by EPA, CPSC, and OSHA. AIHC also recommended that standards be set independently for each substance through a process of "balancing" predicted cancer incidence, costs of control, and benefit of the substance regulated. While AIHC gave examples of alternative balancing procudures which might be used, it did not recommed any specific course of action to EPA for use under section 112.

(6) Need for an Air Carcinogen Policy

The problems associated with the determination of carcinogenicity, the large number of potential carcinogens, and the appropriate level of control of emitting sources contribute to delays in decisions to list carcinogenic substances as hazardous air pollutants as well as to delays in establishing control requirements under section 112. Indeed, EPA has listed only three air pollutants as carcinogens under section 112 since 1970. Therefore, given the potentially large number of airborne carcinogens which may require control, the general unavailability of epidemiological data for determining carcinogenicity and potential risks, the requirements of section 112, and EPA's experience under section 112 to date, the Administrator has concluded that the establishment of a comprehensive and coherent policy and set of procedures for regulatory action in dealing with airborne carcinogens is imperative.

Specifically, publicly-stated, legally binding policies and regulatory mechanisms are needed for: (1) determining the carcinogenicity and carcinogenic risks of air pollutants for regulatory purposes; (2) establishing priorities for evaluating the need for and accomplishing additional regulatory action; (3) specifying the degree of control required in general under section 112 and how that level of control will be determined in setting individual standards; and (4) providing more extensive public involvement in the Agency's decisionmaking on the regulation of airborne carcinogens. Among the benefits of adopting such a policy, in addition to more expeditious control of probable carcinogens, are increased public understanding of and participation in EPA's actions and the providing of earlier notice of EPA's findings and intent to state and local regulatory authorities and to industries.

II. Discussion of the Proposed Rule

A. Introduction

The provisions of the proposed rule are stated formally at the end of this notice. The following sections present the Agency's rationale for, and describe the operation of, the proposed policy. Certain related issues, including the detailed legal basis of the proposal, the consideration of various alternatives, and a comparison with other policies, are discussed in a supplemental statement of basis and purpose following the text of the proposed rule. The Administrator intends to publish a finding at the time of the promulgation of this rule stating that the rule is based on determinations of nationwide scope and effect. The provisions of section 307(b) of the Act, 42 U.S.C. section 7607(b), will therefore limit judicial review to the U.S. Court of Appeals for the District of Columbia Circuit, and litigation of the issues posed by this rule will not be available in connection with subsequent rulemakings in which it is applied.

Pending final promulgation of the rule, as it may be modified after public comment, EPA will generally follow the proposed policy and procedures in actions taken in the interim. Such actions are expected to be listing decisions or regulatory proposals for specific substances, so that EPA will be able to reflect, in final regulatory action on such substances, any changes made in the proposed rule after public comment.

[5] A comparison of these approaches is presented in the supplemental statement which follows the text of the proposed rule.

[6] The comments received at that meeting have been considered in the formulation of today's proposal.

B. Identification and Preliminary Evaluation of Health Risks

This section describes the principles and procedures that EPA will use in identifying potential airborne carcinogens and in determining whether emissions of such substances pose significant risks to public health. These principles and procedures address determinations in three fundamental areas: (1) the generic determination that the presence of airborne carcinogens in relatively low ambient concentrations warrants regulatory action, (2) the identification of specific candidate substances for EPA assessment, and (3) the assessment of whether such substances pose significant risks to public health.

(1) The Need for Concern About Relatively Low Doses

The Administrator's belief that ambient concentrations of carcinogens represent a significant public health risk warranting regulatory action is based on the current understanding of the biological effects of these substances at low concentrations. Essentially, two hypotheses exist. The non-threshold hypothesis assumes that cancer can result from the interaction of as little as one molecule of a carcinogen with a critical receptor in one cell.

The threshold hypothesis, in contrast, assumes that there is a no-effect dose of a carcinogen below which induction of cancer cannot occur. This hypothesis argues that, at small doses, chemical carcinogens can be detoxified through metabolic processes, resulting in some level of exposure which produces no carcinogenic response, or that repair mechanisms or cell death may prevent the development of cancer from a single damaged cell.*(23)*

The public health community has generally concluded that evidence for identifiable dose thresholds does not exist for carcinogens. Under this view, any exposure to a carcinogenic substance carries a risk of cancer. A recent report by the National Academy of Sciences*(24)* offers the following observations in support of this conclusion:

Consideration of the Dose-Response Relationship. In considering the possibility of thresholds for carcinogenesis, it is important to understand that there is no agent, chemical, or physical, which induces in man a form of cancer that does not occur in the absence of that agent. In other words, *when there is exposure to a material, we are not starting at an origin of zero cancers. Nor are we starting at an origin of zero carcinogenic agents in our environment. Thus, it is likely that any carcinogenic agent added to the environment will act by a particular mechanism on a particular cell population that is already being acted on by the same mechanism to induce cancers.* This reasoning implies that the only way for a new carcinogen added to the environment to have a threshold in its dose-response curve would be if it were acting by a mechanism entirely different from that already being experienced by that tissue.

Examination of Experimental Dose-Response Curves. The most extensive information on carcinogenesis both in experimental animals and in humans is with ionizing radiation. Although there is evidence implicating thresholds in some animal tissues, thresholds have in general not been established for most tissues. If such thresholds exist, they occur at sufficiently low doses that it would require massive, expensive, and impracticable experiments to establish them. In view of the common finding—for example, a linear dose-response relationship (unaffected by dose-rate)—of cancer induction in animals by high LET [Linear Energy Transfer] radiation, it is unlikely that such thresholds exist. Linearity is not essential to the no-threshold argument since nonlinear, dose-response relationships do not necessarily imply the existence of thresholds . . .

Heterogeneity of the Population. The human population in the United States—the population we are trying to protect—is a large, diverse, and genetically heterogeneous group exposed to a variety of toxic agents. Genetic variability to carcinogenesis is well-documented (Strong, 1976), and it is also known that individuals who are deficient in immunological competence (for genetic or environmental reasons) are particularly susceptiple to some forms of cancer (Cottier, et al., 1974).

It seems, therefore, that even if we were to postulate an average threshold for a particular cancer induced by a particular agent, we would in practice need a series of thresholds for different individuals. It would be extremely difficult, in practice, to establish a single threshold.

We conclude from these arguments that, despite all the complexities of chemical carcinogenesis, thresholds in the dose-response relationships do not appear to exist for direct-acting carcinogens. If they do exist, they are unlikely to be detected and, hence, impossible to use. This means that there can be no totally "safe" exposure to a particular carcinogen. (Emphasis added.)

EPA has therefore made a generic determination that, in view of the existing state of scientific knowledge, prudent public health policy requires that carcinogens be considered for regulatory purposes to pose some finite risk of cancer at any exposure level above zero. The Administrator believes that this is consistent with the mandate of section 112 requiring the protection of public health against air pollutants which "may reasonably be anticipated" to cause or contribute to the health effects of concern, and the application of an "ample margin of safety" in making such public health judgments.

(2) Identification and Screening of Potential Airborne Carcinogens

Potential airborne carcinogens are now and will continue to be identified through various EPA programs, including searches of the scientific literature, monitoring studies, and biological assays of substances found in ambient air and source emissions, as well as by examining information obtained from federal, state, or other regulatory authorities, private research groups, and other scientific sources. Suspect substances (compounds or mixtures) identified in this manner will be screened to provide a rough estimate of the potential extent of public exposure resulting from ambient air emissions. Screening is essential for two reasons: first, to optimize the use of Agency resources in view of the growing number of substances of concern, and second, to distinguish between those substances which may, through their presence in the air, present carcinogenic risks and those which, although probably carcinogenic, are not emitted in quantities sufficient to pose such risks.

Readily available information will be collected on the intentional and inadvertent production of such substances and their uses, volatility, and other chemical and physical properties. Ambient air measurements and previous scientific assessments will be considered where available. Appropriate offices within EPA and other relevant agencies will be contacted to determine whether any regulatory actions, assessments, or screening activities are underway.

Suspect substances to which the screening process indicates the public is probably exposed through ambient air will receive further attention to evaluate the likelihood that they pose significant carcinogenic risks. Priorities for these evaluations will be assigned based on the expected potential for public exposure to the substances. In some cases, EPA may determine after screening that regulatory actions under other laws administered by EPA or by other regulatory agencies eliminate the need for further EPA action under the Clean Air Act. Otherwise, potential airborne carcinogens will be evaluated for the likelihood that they pose significant risks to public health.

These procedures are already in operation. As noted above, screening of over 140 potential airborne carcinogens has yielded of 40 for which carcinogenicity determinations and preliminary exposure assessments are underway. These determinations are

excepted to be largely completed by December 1979.

(3) Evaluation of Significance of Risk to Public Health[7]

The determination of significant carcinogenic risk will be based on assessments in two areas: the probability that the substance is a human carcinogen, and the extent of human exposure via the ambient air.

(a) *Evaluation of the Probability of Human Carcinogenicity.* The criteria for evaluating the probability that an airborne substance presents a carcinogenic risk to humans are not unique to the air, but are conceptually the same as those for substances present in any exposure medium. It would thus be inappropriate for EPA to use a novel set of criteria for airborne substances alone. Accordingly, in determining the carcinogenic risk posed by air pollutants, EPA will use the criteria specified in general guidelines adopted by the Agency. The EPA "Interim Guidelines for Carcinogen Risk Assessment" ("Interim Guideline") issued on May 25, 1976 *(25)* outlines the basic scientific criteria and policy judgments currently used by EPA in evaluating evidence regarding suspect carcinogens. This guidance is supplemented by the recent release for comment by the Risk Assessment Work Group of the Interagency Regulatory Liaison Group (IRLG)[8] of a scientific review of the principles and methods applicable to the identification and assessment of human risk from carcinogens. *(26)*

In evaluating the likelihood that a substance is carcinogenic in humans under EPA's Interim Guideline and the IRLG Work Group report, available information is considered and judgments concerning the probability of human carcinogenicity are made based on the quality and weight of evidence. The information principally relevant to such an evaluation includes epidemiological and animal or other laboratory studies.

The available information is evaluated in light of the following criteria:

Judgments about the weight of evidence involve considerations of the quality and adequacy of the data and the kinds of responses induced by the suspect carcinogen. The *best evidence* that an agent is a human carcinogen comes from epidemiological studies in conjunction with confirmatory animal tests. *Substantial evidence* is provided by animal tests that demonstrate the induction of malignant tumors in one or more species including benign tumors that are generally recognized as early stages of malinancies. *Suggestive evidence* includes the induction of only those non-life-shorting benign tumors which are generally accepted as not progressing to malignancy and indirect tests of tumorigenic activity, such as mutagenicity, *in vitro* cell transformation, and initiation-promotion skin tests in mice. *Ancillary* reasons that bear on judgments about carcinogenic potential, e.g., evidence from systematic studies that relate chemical structure to carcinogenicity, should be included in the assessment. *(25)*

This "weight of evidence" evaluation outlined in the Interim Guideline does not involve automatic categorization of carcinogenic probability, but rather evaluates the nature of the evidence in each case. Once the evidence has been weighted, of course, the conclusions must be useful for regulatory decisions. For this reason, substances which have been evaluated will be grouped into three broad categories (high, moderate, low) according to the probability of carcinogenicity. Assignment to a particular regulatory category will be made on a case-by-case basis, and will reflect the strength of the evidence that the substance in question is a human carcinogen in comparison with the range of other substances which have been evaluated for regulatory action. In general, substances for which "best" or "substantial evidence" as described above exists will be considered for designation as high-probability human carcinogens for purposes of section 112. Substances for which only "suggestive" evidence exists will be considered for designation as moderate-probability human carcinogens. Substances for which only "ancillary" evidence exists will be considered for designation as low-probability human carcinogens.

EPA recognizes that a range of scientific uncertainty exists within these broad evidentiary classes. For example, a substance which has been found to be carcinogenic in all animal species and sexes tested may be more likely to be carcinogenic in humans than a substance tested in several species and found to produce tumors in only one sex of one species. Although upon consideration of the relative strength of evidence it may be concluded that both substances should be considered high-probability human carcinogens, the extent of uncertainty will be considered on a case-by-case basis.

(b) *Preliminary Evaluation of Ambient Exposure.* EPA will also determine whether a suspect airborne carcinogen is emitted into or present in the ambient air in such a way that significant human exposure results. While the threshold of significance for the ambient exposure determination will be relatively low, some consideration of exposure levels is appropriate to avoid initiating regulatory action under the Clean Air Act for substances such as "laboratory curiosities" which are very unlikely to be present in the ambient air in measureable quantities. This preliminary exposure evaluation is designed to make that distinction.

In the preliminary assessment of ambient exposure, EPA will consider available data on ambient concentrations of the substance, the number and nature of emitting sources, and the number of people living near the sources or in areas in which ambient concentrations have been reported. Where possible, preliminary estimates of lifetime individual risks to the potentially most exposed individuals, based on estimates of carcinogenic strength, will also be calculated.

The preliminary exposure assessment will not be designed to produce the more detailed information appropriate in deciding what control measures may be necessary; that information, including detailed quantitative assessments of risk, will also be developed where possible by EPA, but is not required for the determination of significant ambient exposure.

C. Initial Responses to Preliminary Assessments of Health Risks

The evaluation of the significance of risk to public health will be used to identify those substances for which, in the judgment of the Administrator, there is sufficient evidence to warrant listing under section 112 as airborne carcinogens. For substances which fall short of meeting the criteria for this determination, or for which available information is not sufficient to make a determination, the proposed policy provides for alternative responses. The following paragraphs describe EPA's specific responses to various possible evaluations under the proposed rule.

(1) Listing Under Section 112: Significant Risk

Any subtance judged by the Administrator to present significant carcinogenic risks to the public will be

[7] Today's notice deals only with the carcinogenic hazards of an air pollutant. A substance may also be regulated under section 112 due to its non-carcinogenic health effects, or due to a combination of carcinogenic and other serious effects. Non-carcinogenic effects of substances being reviewed as possible airborne carcinogens will also be evaluated and considered where information on those effects is available.

[8] IRLG Agencies include Environmental Protection Agency, Occupational Safety and Health Administration, Consumer Product Safety Commission, Food and Drug Administration, and Foods Safety and Quality Service (U.S. Department of Agriculture). The Occupational Safety and Health Administration, however, did not participate in the joint issuance of the Risk Assessment Work Group report.

listed under section 112 as a hazardous air pollutant. The finding of significant carcinogenic risk is based on the judgment that a substance has a high probability of human carcinogenicity, and evidence of significant public exposure via the ambient air from emissions from one or more categories of stationary sources.

A high-probability carcinogen may also be listed under section 112 if a preliminary quantitative risk assessment suggests that there is a significant risk to the potentially most exposed groups as a result of emissions of the substance. These preliminary assessments of risk will be considered as supplemental evidence that listing is warranted where the available evidence before the Administrator is otherwise insufficient to indicate the existence of a significant risk. In the judgment of the Administrator, it would not be prudent health policy to base a decision not to list upon a preliminary risk estimate in the presence of qualitative evidence of significant human exposure.

The limitation of the role of these preliminary risk assessments to supplementary evidence in support of a finding of significant risk is based on the Administrator's judgment that these quantitative estimates are too imprecise and uncertain to use as a factor in deciding *not* to list a substance. The Administrator does believe, however, that despite their considerable uncertainty it would be imprudent to ignore assessments suggesting the existence of significant risk, especially in light of the limited direct consequences of listing. The Administrator's views concerning the use of quantitative risk assessment under this proposal are discussed in greater detail elsewhere in this notice.

The timing of the listing decision for a given airborne carcinogen will depend on the nature of the information available to the Administrator. Initially available information will often be adequate to conclude that emissions of the sustance present a significant risk to the public. If so, listing would occur immediately upon that finding. Sometimes, however, the preliminary assessments will not provide enough information to allow the Administrator to decide if emissions of a substance present a significant risk. Where that is the case, further information will be obtained to allow a determination to be made. Substances for which exposures are potentially substantial will be assigned high priority for this further effort.

The purposes of this "early" listing approach are: to increase the priority of a substance for further action, to facilitate the expeditious application of clearly necessary control measures to certain sources, to accelerate the process by which final regulatory decisions are made, and to provide for earlier public notice of the Agency's views and increased public participation in the regulatory decision-making process. Paragraphs (a) and (b) below describe the immediate consequences of listing under the proposed policy.

(a) *Listing Where Generic Standards Are Applicable.* As explained more fully in a companion advance notice of proposed rulemaking (ANPR) elsewhere in today's Federal Register, EPA has developed a draft set of low-cost and readily implemented control procedures and work practices that can be applied to control emissions from various categories of sources producing, consuming, and handling significant quantities of a broad class of substances (volatile organic chemicals) sharing certain properties. Where substances listed as carcinogens under section 112 are emitted from source categories to which these "generic standards" could apply, the application of the standards would be proposed immediately upon listing.

The draft generic standards published elsewhere in the notice as an Advance Notice of Proposed Rulemaking (ANPR) were developed from information and efforts of EPA's Synthetic Organic Chemical Manufacturing Industry (SOCMI) standards development program. This program was initiated in 1976 to gather technical and cost data on the control of air pollution from organic chemical manufacturing and to prepare (1) new source performance standards (NSPS) for total volatile organic compound (VOC) emissions, (2) control techniques guidelines (CTG) for VOC emissions, and (3) section 112 standards for specific volatile organic chemical emissions.

The SOCMI program has focused its efforts on four kinds of emissions: (1) emissions from storage tanks and transportation vessels, (2) fugitive leaks and spills of VOC, (3) losses of VOC from liquid and solid wastes, and (4) emissions from process vents. Information-gathering, analysis, and standards development are at various stages in these four areas, and the program's goal is to develop generic standards in each area. The draft generic standards in today's ANPR, dealing with leaks and spills of VOC, represents the first generic application of information developed by the SOCMI program to standards under section 112. As further information becomes available from the program relating to the other kinds of emissions under study, EPA intends to develop further generic standards for use in conjunction with section 112. EPA would expect to follow a public paritcpation and regulatory development process similar to that of today's ANPR in connection with the development of additional generic standards.

The draft generic standards which are contained in today's ANPR would apply to a large proportion of the organic chemical industry, and are based on the similarity of many operations and equipment throughout the industry. Examples of required procedures are the periodic inspection for and reporting of fugitive leaks and subsequent repair, and the painting of storage tanks white to reduce volatilization of organics. Since most of the potientially carcinogenic chemical air pollutants identified by preliminary surveys to date have been organic chemicals, these generic standards would be expected to apply to the significant sources of most of the chemical carcinogens which might be listed.

In general, the applicablility of the draft generic standards would be dependent on the characteristics of source operations and the quantity of the substance which is produced or handled. The application of the draft generic standards would be proposed only for sources dealing with significant quantities of the listed substance, and some "tailoring" of the standards may be necessary for source categories of each listed pollutant. Sources currently meeting the requirements of such standards would effectively be required to continue doing so. The purpose of the immediate proposal of the generic standards is to ensure that risk reduction which can quickly and easily be achieved through the implementation of clearly appropriate "good housekeeping" measures is not delayed by the further assessments and detailed analyses which will be conducted before final regulatory decisions are made.

These initial regulatory requirements would not be applicable to all airborne carcinogens, and would not necessarily represent the degree of control which may ultimately be required. Because the draft generic standards currently address only fugitive emission sources, further standards will have to be developed individually to control process emissions from significant source categories. As further generic standards are developed for the remaining types of emission points and processes, the extent to which further control requirements will have to be

developed and applied on a case-by-case basis will decrease significantly.

(b) *Listing Where Generic Standards Are Not Applicable* While a substantial majority of the substances which will be listed under section 112 as airborne carcinogens are expected to be chemicals to which generic standards could apply, there will be other substances such as inorganics or radioactive materials emitted from source categories for which generic standards have not been developed. In these cases, listing of a substance will trigger the assignment of a priority for the development of final emission regulations for significant categories of sources emitting the substance.

(2) Regulation Under Section 111: Moderate Probability of Carcinogenicity and High Exposures

Substances for which the probability of human carcinogenicity is moderate to low generally will not be considered for immediate regulation as carcinogens under section 112. If analysis suggests high exposures to a substance of "moderate probability," however, the resulting risk of cancer to the general population remains of concern. Such a substance will therefore undergo further assessment and, unless that assessmet indicates the substance is a high-probability carcinogen, will be considered for interim regulation under section 111 of the Clean Air Act.

Under section 111, new and existing sources may be regulated if they cause or contribute to "air pollution which may reasonably be anticipated to endanger public health or welfare." While a substance of only moderate probability of carcinogenicity would not generally "be reasonably anticipated to result in an increase in mortality or an increase in serious irreversible or incapacitating reversible illness," high exposures to that substance certainly may *endanger* public health. Such a substance may therefore be regulated under section 111.

(3) Further Assessment or Testing

EPA will conduct, recommend, or request that others conduct further biological testing on low or moderate probability substances. Testing may include both cancer and other toxicity assays with priorities based on the extend of public exposures.

(4) Quantitative Risk Assessments for Listed Carcinogens

EPA will conduct a quantitative risk assessment, if possible, for any substance which has been listed under section 112 as a carcinogen. While such quantitative assessments are subject to considerable uncertainty, the Administrator believes that they can provide useful information for two phases of the proposed policy: establishing priorities for regulation of specific source categories of listed pollutants, and determining the degree of control required in final emission standards for those source categories. In assigning priorities for risk assessments, consideration will be given to the likelihood of significant exposures, the effect of any generic standards proposed, carcinogenic strength (potency), and the feasibility of expeditious control.

(a) *Nature of Quantitative Risk Assessments.* Quantitative risk estimates at ambient concentrations involve an analysis of the effects of the substance in high-dose epidemiological or animal studies, and extrapolation of these high-dose results to relevant human exposure routes at low doses. The mathematical models used for such extrapolations are based on observed dose-response relationships for carcinogens and assumptions about such relationships as the dose approaches very low levels or zero. *(23), (25), (26)* Examples of such models are the linear non-threshold model and the log probit model. *(25)* Often, assumptions must be made regarding the relevance of studies involving doses given through feeding or other pathways in extrapolating to inhalation exposures. Where only animal studies exist, additional assumptions must be made concerning "mouse to man" extrapolations.

The risks to public health from emissions of a high-probability carcinogen may be estimated by combining the dose-response relationship obtained from this carcinogenicity strength calculation with an analysis of the extent of population exposure to the substance through the ambient air. Exposure in this context is a function of both the concentraton of a substance and the length of time the concentration is encountered. A detailed exposure analysis will estimate likely exposures for long-term temporal trends, short-term maximum levels, and weighted averages for both the total population exposed and subgroups whose exposures may be significantly greater or otherwise different from the average.

Although ambient monitoring data will be used whenever possible, exposure analyses will often be based on the use of air quality models, available estimates of emissions from significant source categories, and approximations of population distributions near the source categories. Similar models may be used to estimate exposure through other pathways ultimately resulting from air emissions. Detailed air quality models will be used to estimate the range of pollutant exposures associated with each major source category. The air quality models used will generally permit estimation of exposures of up to 20 kilometers and and in some cases 80 kilometers from individual sources. Population and growth statistics will be examined to allow projections to be made of future exposures. The information collected, together with the existing carcinogenic strength determinations, will be used to provide estimates of the degree of risk to individuals and the range of increased cancer incidence expected from ambient air exposures associated with source categories of the carcinogenic air pollutant at various possible emissions levels.

(b) *Uncertainties in the assessment of Risk.* The assumptions and procedures discussed above for extrapolation and for exposure estimates are subject to considerable uncertainty. Where only animal data are available to assess the magnitude of cancer risk to human populations, the differences in susceptibility between animal species and humans, and the need to extrapolate dose-response data to very low ambient concentrations, result in risk estimates that must be regarded only as rough indications of effect. *(25)*

Uncertainty in exposure estimates arises from the use of limited monitoring, pollutant transport models, mobility of the exposed population and other factors. In combining these exposure estimates with dose-response extrapolations to provide estimates of cancer incidence, the total uncertainties are increased.

The primary model that EPA will use to estimate carcinogenic risk from exposure to a particular substance will be the linear non-threshold dose/response model. This model has been chosen in order to avoid understating the risk calculated from the extrapolation of the effects osbserved at high doses to the lower doses characteristic of ambient exposure. To the extent possible, the range of uncertainty in the risks extrapolated from animal studies to humans and from high to low doses will be described.

The decision to employ estimates of carcinogic risks despite their lack of precision rests on the belief that although they are subject to considerable uncertainties, current analytical models and techniques can, with due consideration of the uncertainties, provide useful estimates of relative carcinogenic strength and of

the probable general ranges of excess cancer incidence and individual risks. This view has been supported by the National Academy of Sciences, *(24)* the National Cancer Advisory Board, *(27)* and others. *(28)*

D. Establishment and Review of Emission Standards and Related Requirements

(1) Introduction

A central issue in developing a policy for the protection of public health from carcinogens is the determination of the extent to which exposures must be reduced. Given the impossibility of identifying levels of carcinogens with no associated risk, some have argued that no exposure should be tolerated and that emissions should be reduced as expeditiously as practicable to zero. Others contend that permissible exposures should be determined by an unstructured balancing of risks, costs, and benefits.

A number of approaches for addressing the appropriate level for control of carcinogens have been considered or proposed by the federal regulatory agencies, industrial groups, environmental organizations, and others. Prominent examples include the OSHA proposal, the CPSC policy,[9] and the EDF petition on airborne carcinogens. A discussion of the suggested alternatives is presented in the supplemental statement which follows the text of the proposed rule. The following sections describe the approach proposed by EPA.

(2) The Proposed EPA Approach

The standard-setting policy proposed today requires, as a minimum, the use of "best available technology" (BAT) to control emissions from source categories presenting significant risks to public health. The policy would also require additional controls, as necessary, to eliminate "unreasonable residual risks" remaining after the use of best available technology. This approach is a judgmental one, designed to protect the public health with an ample margin of safety from risks associated with exposure to airborne carcinogens. The implementing procedure described below puts prime emphasis on public health, consistent with section 112, but permits consideration of economic impacts and benefits of the activity in setting standards for each source category. Uncertainties in the assessments of risks, costs, and potential benefits, as well as the distributional (equity) problems of various situations, would also be considered in setting standards.

(a) *Source Categories Regulated*

The first step in establishing standards and requirements for pollutants listed under section 112 under this proposed policy is the determination of which categories of sources emitting the pollutants will be regulated, and in what order regulations will be developed. Although a pollutant may have been listed because emissions from a particular source category pose a significant risk, other source categories may also emit the pollutant in lesser amounts. This may occur, for example, because the sources process very little of the substance, because the substance is present in only trace amounts in the sources' raw materials, or because sources have installed adequate controls on their own initiative or in response to other regulatory requirements.

The Administrator will therefore propose regulations only for those source categories which may pose significant risks to public health. The determination of whether a source category emitting a listed pollutant poses a significant risk will be made on essentially the same basis as the listing decision, except that the more detailed exposure analysis and risk assessement then available will be used in lieu of the preliminary information used in the listing decision. As in the listing decision, the risk assessment will be used to indicate the existence of a significant risk where the exposure analysis alone is insufficient, but will not be used as evidence that a significant risk does not exist where the exposure analysis indicates to the contrary.

(b) *Priorities for Development of Standards.* EPA anticipates that a substantial number of substances will be listed as carcinogenic air pollutants under section 112 in the near future. It is also likely that many of these substances will be emitted in significant quantities from more than one source category. As a result, EPA will need to develop emission standards and other requirements for a large number of source categories emitting these substances. At least until generic standards can be developed for large groups of these sources, the resources that would be necessary to complete this task immediately far exceed those available to EPA for this purpose. Today's proposal therefore provides for the assignment of priorities to significant source categories for the development of these regulations, through publicly stated criteria and announced decisions.

Under today's proposal, source categories posing significant risks will be assigned priority status (high, medium, or low) for further regulatory action (beyond generic standards) on the basis of: (1) the magnitude of projected total excess cancer incidence associated with current and future source emissions; (2) magnitude of cancer risks for the most exposed individuals; (3) ease of expeditious standards development and implementation; and (4) feasibility of significant improvements in controls. In addition, significant sources of more than one carcinogen may be given priority over single-pollutant sources, based on the sum of risks from the emitted substances.

A high priority will be assigned, for example, to a source category constituting an important problem requiring immediate attention, or where risks are somewhat lower but an appropriate regulatory solution is both feasible and readily available. Source categories assigned medium priority will generally be those that present lower risks and will be scheduled for standard development as resources become available. Lower risk source categories for which the extent of feasible control may be substantially limited will be assigned low priority for regulation development. Assignment to the low priority category will generally mean that active development of regulations will not begin until there is some change in the factors which led to the assignment, or until higher priority actions have been completed.

(c) *Regulatory Options Analysis.* EPA will perform detailed analyses to identify alternative, technologically feasible control options and the economic, energy, and environmental impacts that would result from their application. Where substitution is determined to be a feasible option, the benefits of continued use of the substance or process will be considered. These analyses will rely primarily on the procedures and techniques employed by EPA for developing New Source Performance Standards under section 111 of the Act.

The identification of feasible control options will initially survey the existing control devices at the sources within a particular category to determine the best controls currently in use. The potential emission points of the listed pollutant at a particular kind of facility will also be identified, as will possible emissions of carcinogens other than the specific one under study. EPA will, in addition, examine the applicability of available technologies which are not currently

[9] The CPSC interim policy has been rescinded, 44 FR 23821 (April 23, 1979).

used by the industry to control the pollutant of concern (technology transfer) but which have been demonstrated in pilot tests or other industrial applications. Finally, the availability and adequacy of substitutes which would eliminate some or all emissions of the pollutant will be assessed.

Once the technologically feasible control alternatives, which may range from no further control to a complete ban on emissions, have been identified, the environmental, economic and energy impacts of these options will be determined. Considerations in these impact assessments will include for each option: the number of plant closures predicted and the direct impact on employment and end product prices; the impact on growth and expansion of the industry; the resulting changes in profitability; capital availability for control equipment; the impacts from the availability of substitute products and foreign imports; the potential increases in national energy consumption; and the impacts on other environmental medial including increased water pollution and solid waste disposal. On the basis of these assessments, one of the control options identified will be designated as the "best available technology" for the control of emissions from the sources in the category. This level of control will be that technology, which in the judgment of the Administrator, is the most advanced level of control adequately demonstrated, considering economic, energy, and environmental impacts.

The control level designated "best available technology" may be different for new and existing facilities in a category. For practical purposes, this level of control for new sources will, as a minimum, be equivalent to that which would be selected as the basis for a New Source Performance Standard (NSPS) under section III. The requirement of "best available technology" for new sources would consider "economic feasibility" and would not preclude new construction.

The selection of BAT for existing sources may require consideration of the technological problems associated with retrofit and related differences in the economic, energy, and environmental impacts. In practice, BAT for existing sources would consider economic feasibility and would not exceed the most advanced level of technology that at least most members of an industry could afford without plant closures.

(d) *Minimum Requirements for Existing Sources.* Final section 112 standards will require existing sources in any regulated source category, as a minimum, to limit their emissions to the levels corresponding to the use of "best available technology." This requirement is based on the Administrator's' judgment that any risks that could be avoided through the use of these feasible control measures are unreasonable. Whether BAT controls are sufficient to protect public health will be determined by a subsequent evaluation of the remaining risks.

(e) *Determination of Unreasonable Residual Risk for Existing Sources.* Following the identification of BAT for existing sources, the quantitative risk assessment described earlier will be used to determine the risks remianing after the application of BAT to the source category. If the residual risks are not judged by the Administrator to be unreasonable, further controls would not be required. If, however, there is a finding of unreasonable residual risk, a more stringent alternative would be required. Among the possible alternatives would be the immediate application of more restrictive emission standards, including those based on more extensive use of substitutes, and scheduled or phased reductions permissible emissions. The alternative selected would be that necessary, in the Administrator's judgment, to eliminate the unreasonable residual risks.

Given the differences in the degree of certainty in risk estimates, in the numbers of people exposed, in benefits, in the distribution of risks and benefits, in the costs of controls, in the availability of substitutes, and in other relevant factors, it is not possible to state any precise formula for determining unreasonable residual risk. The determination will necessarily be a matter of judgment for each category involved. Nevertheless, the process followed and the various factors involved can be outlined.

The determination of unreasonable residual risk will be based primarily on public health, and will require protection with an ample margin of safety. To the extent possible, quantitative or qualitative estimates of various factors will be made for purposes of comparison. Among these are: (1) the range of total expected cancer incidence and other health effects in the existing and future exposed populations through the anticipated operating life of existing sources; (2) the range of health risks to the most exposed individuals; (3) readily identifiable benefits of the substance or activity; (4) the economic impacts of requiring additional control measures; (5) the distribution of the benefits of the acitivity versus the risks it causes; and (6) other posseible health and environmental effects resulting from the increased use of substitutes.

(f) *The Degree of Control Required for New Sources.* The need to focus independently on new sources of carcinogenic emissions stems principally from the nature of the threat posed by airborne carcinogens. Because of the lag time betweeen exposure to a carcinogen and onset of the disease, any assessment of the magnitude of the problem posed by current exposure levels is subject to considerable uncertainty, since the consequences have not yet become manifest. Decisions on the appropriate level of control must take into account the possibility that the dimensions of the current problem have been underestimated.

It also appears likely that the activities causing current carcinogenic emissions will continue to expand, and that new ones will appear. Since new emissions would threaten an increased cancer incidence, it is incumbent upon the Agency to meet that threat in advance, especially if that can be done free of some of the constraints associated with the reduction of risks from existing sources.

The policy of developing separate requirements for new sources is based on two additional considerations. First, many of the factors affecting risks can be controlled to a significant extent before new construction takes place. Foremost among these factors is siting: new sources in heavily populated areas create much greater cancer risks than those locating in less populated areas. In addition, new sources can sometimes apply control technology more cheaply and effectively than existing sources, since new sources: (1) are often larger and can thus benefit from the economies of scale; (2) can engineer the integration of emission controls from the ground up; and (3) do not have existing control equipment which must be dismantled or scrapped.

Second, given these differences, a determination of the appropriate control level for new sources on the basis of unreasonable residual risk may also weigh the relevant factors differently. While the focus for existing sources is primarily the balancing of health risks against the costs of retrofit controls beyond BAT, for new sources the balance can focus more heavily on siting, the benefits of the activity, and the possibility of fundamental changes in the process which would lower emissions.

For these reasons, the Administrator proposes to include in this policy a mechanism dealing specifically with new sources. Under this mechanism,

described in more detail below, the standards applicable to new and modified sources would be determined on a case-by-case basis, and would consist of either (a) a presumptive emission standard, (b) the best available technology standard, or (c) an alternative standard. Regulations concerning procedures for the approval of construction or modification under section 112 standards (40 CFR 61.07) would be amended to reflect the requirements of the proposed policy, if it is adopted.

The Administrator recognizes that the mechanism proposed here is somewhat complex. After extensive consideration, however, this procedure appears to be the approach most likely to satisfy the policy and practical needs described above, within the constraints imposed by section 112. The Administrator actively solicits comment on the procedure, and particularly on possible alternative means to achieve the same objectives.

(1) Presumptive Emission Standards

EPA will prescribe a presumptive national emission standard for each regulated source category. This standard will prescribe a maximum emission rate and will be based solely on potential health effects. The presumptive standard will be designed to preclude the existence of significant risks under projected worst case assumptions of plant size and emissions, surrounding population density and distribution, and meteorology. Any proposed new source which would meet this limit would be certified for construction under section 112(c) (1)(A) without further demonstration or analysis.

(2) Waiver to Best Available Technology

Any new source meeting Risk Avoidance Criteria (described below) specified for each regulated source category will be granted an automatic waiver of the applicable presumptive emission standard, and will instead be required to meet the best available technology standard. Risk Avoidance Criteria will be designed to recognize actual conditions more favorable than the worst case assumptions used as the basis for the presumptive emission standard. Waivers will be granted, upon application of the source during the certification process, where, as a result of those different conditions, emissions greater than the level of the presumptive emission standard would not result in risks greater than those associated with the presumptive emission standard. The criteria to be met, in general form, are:

(a)(1) Population density and distribution around the proposed site at the sources's proposed emission rate are within limits specified by EPA. These limits will be set to allow carefully-sited sources, whose emissions using best available technology under specified siting conditions would not result in significant risks, to receive automatic waivers; and

(2) The proposed source is not within a specified distance of a source of carcinogens regulated under section 112; or

(b) An offset against new emissions can be obtained either internally (existing sources seeking to expand) or from existing sources of carcinogens regulated under section 112 within a specified distance. This criterion is intended to allow automatic waivers to best available technology where exposure to people already at risk from recognized carcinogenic emissions would not increase as a result.

(3) Establishment of Alternative Standard

Any proposed source unable to qualify for an automatic waiver to best available technology would be eligible to apply to EPA for the establishment of an alternative standard applicable to that source. The alternative standard would be based on the avoidance of unreasonable residual risk after the use of best available technology, and may range from the presumptive emission standard to best available technology. In establishing an alternative standard, the Administrator would generally consider the same factors as in an unreasonable residual risk determination for existing sources. The relevant factors include:

(a) the range of total expected cancer incidence and other serious health effects associated with emissions of the source throughout its anticipated operating life;

(b) the range of health risks to the most exposed individuals from the source's emissions;

(c) existing risks to the affected population from emissions of the listed pollutant and other carcinogenic air pollutants;

(d) readily identifiable benefits of the substances or the activity producing the risk;

(e) the economic and technological feasibility of further control measures;

(f) the distribution of the benefits of the activity versus the distribution of risks;

(g) other possible health effects resulting from the use of substitutes for the substance or activity; and

(h) the extent to which possible emissions offsets may be obtained.

(3a) Summary of the Legal Basis for Proposed EPA Standard-Setting Approach

As noted earlier, EPA has experienced considerable difficulty in interpreting and applying the requirement of "an ample margin of safety to protect the public health" in setting standards for carcinogenic air pollutants under section 112 of the Clean Air Act. The factual aspects of the problem are first, as explained above, that airborne carcinogens appear to have no identifiable thresholds (minimum exposure levels) for adverse health effects; second, that in many cases the individual risks they present at ambient concentrations may be extremely small; and third, that total elimination of those risks could require the closure of some of the nation's basic industries. The corresponding problem of legal interpretation is that Congress does not appear to have addressed this situation when enacting section 112.

For the reasons discussed in more detail in the supplemental statement of basis and purpose following this notice, the Administrator has concluded that although it is possible to read section 112 as requiring regulation designed to protect health absolutely, Congress has not expressed any clear intention to require the total elimination of risks posed by carcinogenic air pollutants. The Administrator therefore believes that, in light of the legislative history of section 112 and of the Act as a whole, the most reasonable interpretation of that section requires him to focus principally on health protection in regulating airborne carcinogens but does not require the total elimination of risks from such substances. Consequently, it is the Administrator's judgment that standards set under the policy proposed today will protect the public health with an ample margin of safety. These conclusions are reinforced by the likelihood that Congress would have provided much clearer guidance had it intended the drastic results that would flow from a requirement to eliminate totally all risks from airborne carcinogens.

(4) Public Notification and Involvement

(a) *Screening, Identification, and Assessment.* The results of the preliminary screening process, determinations of carcinogenicity, preliminary exposure analyses, and decisions on listing, proposal of generic regulations, and further analysis and testing will be published in the Federal Register. This notification will serve to advise the public, state and local agencies, and industry of the potential

hazards associated with the substances examined, will indicate which substances are receiving further attention, and will request the involvement of interested parties.

(b) *Listing, Quantitative Risk Assessments, and Determination of Regulatory Priorities.* The development of regulations is a time-consuming process. While the use of generic standards and the initial focus on regulating the most significant sources first will accelerate the process of reducing risks to public health, it is likely that regulation of medium and lower priority sources will not be completed for a number of years. To insure that the public, industry, and the states are aware of the status of federal regulatory efforts, the results of risk assessments and priority determinations will be published in the Federal Register. These notices will include decisions and recommended actions on all substances under review.

(c) *Proposal and Promulgation of Standards.* Upon the proposal of generic or final regulations for source categories of listed airborne carcinogens, EPA will hold public hearings and solicit written comments on the proposed rulemaking. Records of such hearings and comments received will be made available for public inspection through the maintenance of public dockets.

(5) Preparation of Regulatory Analyses

This proposal is classified as a major regulation under EPA's final report implementing Executive Order 12044 "Improving Government Regulations" (44 FR 30988) in that it addresses a "major health or ecological problem." The Executive Order requires that a regulatory analysis of potential economic impacts be prepared for major regulations meeting certain criteria. The criteria are, in brief: 1) additional costs of compliance totalling $100 million; 2) additional costs of production exceeding 5 percent of the selling price of the product; or 3) the Administrator requests such an analysis.

The procedures outlined in the proposed rule are intended to guide the Agency in the identification and control of airborne carcinogens under the principal authority of section 112 of the Clean Air Act. The policy does not impose regulatory requirements on any emission source and, therefore, does not meet either of the economic criteria for preparing a regulatory analysis. The purpose of the policy is to establish a framework for EPA decisions including the conduct of economic and risk analyses of subsequent regulatory actions. To attempt to quantify the impact of future regulations requiring unidentified controls on unknown source categories of, as yet, unnamed pollutants would not, in the judgment of the Administrator, be a meaningful exercise.

While an economic analysis is not considered appropriate for this proposed procedural rule, EPA has considered possible regulatory alternatives. A discussion of relevant issues is presented in the supplemental statement of basis and purpose which follows the text of the proposed rule.

(6) Periodic Review

At intervals of no more than five years, regulations promulgated for each source category of airborne carcinogens will be reviewed for possible modification, based on recent technological developments and any new health effects information available. This will provide an opportunity to consider the tightening of standards for existing sources to reflect new technology, and the application of innovative technologies for new sources. At the conclusion of each review, standards will be revised to reflect more stringent control requirements, or the existing standards may be reaffirmed, as appropriate.

(Sections 111, 112, and 301(a) of the Clean Air Act, as amended, 42 U.S.C. sections 7411, 7412, and 7601(a).)

Dated: August 22, 1979.

Douglas H. Costle,

Administrator.

The Administrator proposes to add the following rule as Appendix C to Part 61 of Title 40 of the Code of Federal Regulations:

Appendix C—Policy and Procedures for Identifying, Assessing, and Regulating Airborne Substances Posing a Risk of Cancer

I. Introduction

A. Scope of Rule

This rule specifies the policies used by EPA in the regulation of stationary sources of potentially carcinogenic air pollutants under relevant Clean Air Act authorities, principally section 112. The rule does not affect regulation of non-carcinogenic hazardous substances under section 112[10] or supplemental regulation of airborne carcinogens under other Agency authorities where applicable.

B. Statement of General Policy

(1) The EPA policy for regulation of sources emitting airborne carcinogens under section 112 of the Clean Air Act is to protect the public health with an ample margin of safety. This protection will be achieved by requiring the elimination of unreasonable residual risks from existing sources as quickly as possible, and by preventing the development of such risks from new sources.

(2) The presence of "unreasonable residual risks" to an affected population will be determined independently for each category of sources regulated. Primary emphasis in this determination will be on the level of risk remaining after the installation of the "best available technology" for the control of emissions from sources in the category. In evaluating this risk, consideration will be given to the benefits conferred by the substance or activity, the distribution of those benefits versus the distribution of the risks presented by the substance or activity, the availability of substitutes, the cost of further control of the substance or source category, and the proposed siting of new sources.

II. Preliminary Assessment of Health Risks

A. Identification of Candidate Substances

Potential airborne carcinogens (candidate substances) will be identified through EPA programs, including searches of the scientific literature, monitoring studies, and biological assays of substances found in the ambient air and source emissions, as well as by examining information obtained from federal, state, or other public testing or regulatory authorites, private research groups, and other scientific sources.

B. Screening

Candidate substances will be screened to determine the potential extent of exposure of the public through air emissions.

(1) Screening of candidate substances will consist of an analysis of readily available information on their production, uses, properties, air concentrations, and of other indices useful in assessing the potential for public exposure. EPA will also ascertain whether any other regulatory efforts are in progress with respect to these substances.

(2) Substances which the identification and screening process indicates (a) may be carcinogenic and (b) the public probably is exposed to via the ambient air will be evaluated to determine whether they pose a significant carcinogenic risk to the public. Substances with the greatest apparent potential for public exposure will be given highest priority for this further examination.

C. Preliminary Evaluation of Risk

The preliminary evaluation of the risks posed by a candidate substance will consist primarily of an evaluation of the probability that it is a human carcinogen and a preliminary evaluation of the extent of ambient exposure.

(1) *Evaluation of the Probability of Human Carcinogenicity.* Evaluation of the probability that a substance is a human carcinogen will be performed using criteria adopted by EPA for such determinations. These currently applicable criteria are summarized in the Interim Guidelines for Carcinogen Risk Assessment (41 FR 21404; May 25, 1976). Using these criteria, the weight and quality of evidence of human carcinogenicity for

[10] A substance may also be regulated under section 112 due to its non-carcinogenic health effects, or due to a combination of carcinogenic and other serious effects. Non-carcinogenic effects of substances being reviewed as possible airborne carcinogens will also be evaluated and considered where information on these effects is available.

candidate substances will be assessed. Based on such assessments, including comparison with other substances which have been evaluated for regulatory action, a judgment of the probability that a substance is a human carcinogen for regulatory purposes will be made roughly as follows:

(a) High Probability of Human Carcinogenicity—Substances for which "best" or "substantial" evidence exists from epidemiological and/or at least one mammalian study.

(b) Moderate Probability of Human Carcinogenicity—Substances for which "suggestive" evidence exists from epidemiological, animal, or "short-term" studies.

(c) Low Probability of Human Carcinogenicity—Substances for which only "ancillary" evidence exists, such as from structural correlations, or for which epidemiological or animal results are judged to indicate low probability.

(2) *Preliminary Evaluation of Ambient Exposure.* EPA will also conduct preliminary evaluations to determine whether source emissions of high-probability carcinogens exist which cause or contribute to air pollution posing significant carcinogenic risks to the public. Among the factors that this evaluation may take into account are the number and types of sourses emitting the substances in areas where people may be exposed, the volume of their emissions, any ambient concentrations which may have been reported, and the number of people living near emitting sources or in the vicinity of ambient measurement sites. Where available, estimates of carcinogenic strength may be used to compute preliminary quantitative estimates of lifetime individual risks to the potentially most exposed individuals.

III. Initial Responses to Preliminary Assessment of Health Risks

A. Listing

Substances judged by the Administrator to present significant carcinogenic risks to the public will be listed under section 112 as hazardous air pollutants. A substance will be judged to present a significant carcinogenic risk if (1) it is judged by the Administrator to have a high probability of being a human carcinogen, and (2) there is evidence of significant public exposure via the ambient air from emissions from one or more categories of stationary sources. Where the available evidence is otherwise insufficient to indicate the existence of a significant risk, a high-probability carcinogen also will be listed under section 112 if a preliminary quantitative risk estimate suggests that a significant risk to the potentially most exposed groups exists. Where emissions or exposure data indicate the existence of a significant risk, quantitative risk estimates will not be considered evidence to the contrary.

B. Generic Standards

Upon the listing of a substance, previously-developed generic standards will be proposed for source categories of that substance to which they could apply. Generic standards, developed based on the similarities among industrial processes, will be "tailored" as necessary to fit the source categories for which they are proposed.

C. Moderate-Probability and Low-Probability Carcinogens

EPA will recommend or require further biological testing of substances initially judged to have a moderate or low-probability of being human carcinogens. Priorities for testing will be based on the extent of public exposure. Moderate-probability substances for which public exposures appear to be high will be considered for regulation under section 111 of the Clean Air Act.

D. Quantitative Risk Assessments

Quantitative risk assessments on all high-probability carcinogens will be performed, if possible. These assessments will be undertaken based on priorities designed to produce action most quickly on the most serious problems pending at any given time. The results of these assessments will be used in the assignment of priorities for further regulation and in the evaluation of residual risks.

(1) The risk assessments will examine:

(a) detailed information on emission sources of the pollutants, the sources' control status and total emissions, measured and predicted ambient concentrations of the pollutants, and the production levels and uses of the substances;

(b) distribution of the population around sources in specific sources categories;

(c) estimated duration and magnitude of exposures of the affected population and the most exposed individuals;

(d) estimated carcinogenic strength (potency) of the substances;

(e) estimated range of expected cancer incidence for the total population and individual risks for the most exposed individuals at various possible emission levels;

(f) other serious health effects of the substances; and

(g) projected population growth around existing sources.

(2) The criteria to be considered in assigning priorities for quantitative risk assessments include, in usual order of importance:

(a) probable extent of exposure of the public through air emissions;

(b) estimated carcinogenic strength;

(c) the effect of any generic standards proposed; and

(d) the feasibility of expeditious control.

(3) The results of detailed risk assessments and determinations resulting from the assessments will be published in the Federal Register and public comments will be solicited.

IV. Establishment and Review of Standards and Requirements

A. Source Categories Regulated

Emission standards in addition to generic standards will be proposed for any source category whose emissions present a significant risk to public health. Such standards and other requirements will be determined independently for each regulated source category. A source category emitting a listed pollutant will be found to pose a significant risk if there is evidence, from the detailed exposure analysis, that its emissions result in significant public exposure to the pollutant via the ambient air. Significant risk also will be found in the absence of such evidence, if a detailed risk assessment suggests that such a risk to the most exposed individuals or to the population exists. If emissions or exposure data indicate the existence of a significant risk, the quantitative risk assessment will not be considered as evidence to the contrary.

B. Priorities for Further Regulation

Further standards and requirements for regulated source categories will be developed according to the priority assigned to those source categories. Source categories will be assigned high, medium, or low priority based on the following criteria:

(1) magnitude of the total expected and upper bound cancer incidence associated with exposure to all carcinogens emitted by the source category;

(2) degree of risk to the most exposed individuals;

(3) ease of expeditious development and implementation of standards; and

(4) feasibility of significant improvements in controls.

C. Regulatory Options Analysis

EPA will conduct a regulatory options analysis to support decisions on further required control measures.

(1) The analysis will identify technologically feasible control alternatives, their economic, energy, and environmental impacts, and, in the case of substitutes, the benefits of continued use of the substance or process.

(2) The analysis will also designate levels of control considered "best available technology" for new and for existing sources in a category. The control level designated "best available technology" may be different for new and existing facilities in a category.

(a) For new sources, "best available technology" is that technology which, in the judgment of the Administrator, is the most advanced level of controls adequately demonstrated, considering economic, energy, and environmental impacts.

(b) For existing sources, "best available technology" is that technology which, in the judgment of the Administrator, is the most advanced level of controls adequately demonstrated, considering economic, energy, environmental impacts, and the technological problems associated with retrofit.

D. Requirements for Existing Sources

(1) Existing sources in a regulated source category will be required, as a minimum, to limit their emissions to the levels corresponding to the use of "best available technology".

(2) Existing sources in a regulated source category also will be required to limit their emissions in whatever additional amount is necessary, in the Administrator's judgment, to eliminate unreasonable residual risks to public health associated with those emissions.

(3) The principal emphasis in determining the level of additional control required to

eliminate unreasonable residual risk from an existing source category will be on public health. Factors which may be considered in this judgment include:

(a) the range of total expected cancer incidence and other serious health effects in the existing and future populations exposed, for the anticipated operating life of existing sources in the category;

(b) the range of health risks to the most exposed individuals;

(c) readily identifiable benefits of the substance or activity producing the risk;

(d) the economic effects (expecially plant closures) of requiring additional control measures;

(e) the distribution of the benefits of the activity versus the distribution of its risks; and

(f) other possible health effects resulting from the increased use of substitutes.

E. Requirements for New (Including Modified) Sources

(1) Except as provided below, new sources in a regulated source category will be required to meet a presumptive national emission standard designed to preclude the existence of significant risks under projected worst case assumptions of plant size and emissions, surrounding population density and distribution, and meteorology.

(2) Any proposed new source which shows, in the certification process required by section 112(c)(1)(A), that it meets the requirements of the Risk Avoidance Criteria (described below) applicable to that source category will automatically be permitted to meet the applicable best available technology standard instead of the applicable presumptive national emission standard. The specific terms of Risk Avoidance Criteria will be prescribed separately for each source category.

The criteria will generally require that either:

(a)(1) Population density and distribution around the proposed site at the source's proposed emission rate are within limits specified by EPA, and

(2) The proposed source is not within a specified distance of a source of carcinogens regulated under section 112; or

(b) An offset against new emissions can be obtained either internally (existing sources seeking to expand) or from existing sources of carcinogens regulated under section 112 within a specified distance.

(3) Any proposed new source which is unable to qualify for the automatic waiver to best available technology described in paragraph (2) may apply for the establishment of an alternative standard applicable to the proposed source as part of the certification process required under section 112(c)(1)(A). The Administrator will establish an alternative standard for that source at the best available technology standard or at whatever more stringent level of control is necessary, in his/her judgment, to prevent the existence of an unreasonable residual risk associated with emissions from the proposed source. Factors which may be considered in this judgment include:

(a) the range of total expected cancer incidence and other serious health effects associated with emissions of the source throughout its anticipated operating life;

(b) the range of health risks to the most exposed individuals from the source's emissions;

(c) existing risks to the affected population from emissions of the listed pollutant and other carcinogenic air pollutants;

(d) readily identifiable benefits of the substance or the activity producing the risk;

(e) the economic and technological feasibility of control measures more stringent than BAT;

(f) the distribution of the benefits of the activity versus the distribution of its risks;

(g) other possible health effects resulting from the use of substitutes for the substance or activity; and

(h) the extent to which possible emission offsets have been obtained.

F. Review of Standards and Requirements

Regulations promulgated for each source category of airborne carcinogens will be reviewed and, if appropriate, revised at intervals of no more than five years.

References

1. Pellizzari, E. D., "Development of Methods for Carcinogenic Vapor Analysis in Ambient Atmospheres". Publication No. EPA-605/2-74-121, RTP, N.C. July 1974.

2. Pitts, J., D. Grosjean and T. M. Mischke, Mutagenic Activity of Airborne Particulate Organic Pollutants, *Toxicology Letters*, 1:65-70 (1977).

3. Sawicki, E., "Chemical Composition and Potential Genotoxic Aspects of Polluted Atmospheres", Mohr, U., Tomatis, L., and Schmahl, D., eds. in *Air Pollution and Cancer in Man*, International Agency for Research on Cancer (IARC Scientific Publication No. 16). Lyon, Franke (1977).

4. Occupational Safety and Health Administration, "Identification, Classification and Regulation of Toxic Substances Posing a Potential Occupational Carcinogenic Risk", 29 CFR Part 1990, 43 *FR* 54148, October 4, 1977.

5. Consumer Product Safety Commission, "Interim Policy and Procedure for Classifying, Evaluating, and Regulating Carcinogens in Consumer Products", 43 *FR* 25658, June 13, 1978 (withdrawn April 23, 1979 44 *FR* 23821).

6. "Carcinogens in the Environment", in: Council on Environmental Quality, Sixth Annual Report, Washington, D.C. (1975).

7. Cairns, J., "The Cancer Problem", *Scientific American*, 233(5):64-78, (November 1975).

8. Young, J. L., A. J. Asire, and E. S. Pollack, "SEER Program: Cancer Incidence and Mortality in the United States 1973-1976", DHEW Publication No. (NIH) 78-1837, National Cancer Institute, Bethesda, Maryland (1978).

9. "Prevention of Cancer", Report of a World Health Organization Expert Committee, WHO Technical Report Series No. 276, Geneva, 1964.

10. Fraumeni, J. E., Ed., *Persons at High Risk of Cancer: An Approach to Cancer Etiology and Control*. Academic Press, Inc., New York (1975).

11. Selikoff, Irving J. in *Persons at High Risk of Cancer: An Approach to Cancer Etiology and Control*. Academic Press, Inc., New York (1975).

12. Maugh, J. H., "Chemical Carcinogens: The Scientific Basis for Regulation", Science 201: 1200-1205, September 29, 1975.

13. Mohr, V., L. Tomatis, P. Schmahl, *Air Pollution and Cancer in Man*, pp. 169-253. International for Research on Cancer. Publication No. 16, Lyon, France (1977).

14. Cederloff, R., R. Doll, B. Foyer, L. Friberg, N. Nelson, and V. Vouk (ed), "Air Pollution and Cancer: Risk Assessment Methodology and Epidemiological Evidence". *Environmental Health Perspectives*. 22:1-12, February 1978.

15. Pike, M. C. *et al.* "Air Pollution" in *Persons at High Risk of Cancer: An Approach to Cancer Etiology and Control*. Academic Press, Inc., New York (1975).

16. "Cancer Facts and Figures", American Cancer Society, New York (1974).

17. "Estimates of the Fraction of Cancer Incidence in the United States Attributable to Occupational Factors", National Institute of Environmental Health Sciences, Draft Summary, September 11, 1978.

18. "Preliminary Scoring of Organic Air Pollutants", EPA-450/3-77-008 (1976).

19. Faoro, Robert B. and J. A. Manning, "Trends in Benzo(a)pyrene (1966-1975)", pre-publication 1978 copy, accepted for publication in JAPCA.

20. Atmospheric Benzene Emissions, U.S. EPA, RTP, N.C. October, 1977 (EPA-450/3-88-029).

21. National Emission Standards for Hazardous Air Pollutants, Asbestos, Beryllium, and Mecury, EPA, 38 *FR* 8820 (1973).

22. National Emission Standards for Hazardous Air Pollutants, Proposed Standard for Vinyl Cloride, EPA, 40 *FR* 59532, December 24, 1975 (final standard 41 *FR* 46560).

23. Maugh, T. H., "Chemical Carcinogens: How Dangerous are Low Doses?" *Science* 202: 37-41, October 6, 1978.

24. *Drinking Water and Health*, Part 1, Chapters 1-5, Draft, National Research Council, National Academy of Sciences, Washington, D.C. (1977).

25. EPA, "Health Risk and Economic Impact Assessments for Suspected Carcinogens", Interim Procedures and Guidelines, 41 *FR* 24102, May 25, 1976.

26. "Scientific Bases for Identification of Potential Carcinogens and Estimation of Risks" Report by the Work Group on Risk Assessment of the Interagency Regulatory Liaison Group (IRGL) 44 FR 39858, July 6, 1979.

27. "General Criteria for Assessing the Evidence for Carcinogenicity of Chemical Substances," Report of the Subcommittee on Environmental Carcinogenesis, National Cancer Advisory Board, *Journal of the National Cancer Institute*, 58:2, February, 1977.

28. Hoel, David G., *et al.* "Estimation of Risks of Irreversible, Delayed Toxicity," *Journal of Toxicology and Environmental Health* 1:133-151, 1975.

29. Bachmann, John D. and John R. O'Connor, "Identification, Assessment, and Regulation of Toxic Air Pollutants" presented at the Air Pollution Control Association

Speciality Conference, February 14, 1979, Gainesville, Florida.

30. "Petition for the Initiation of Rulemaking Proceedings to Establish a Policy Governing the Classification and Regulation of Carcinogenic Air Pollutants under the Clean Air Act," Environmental Defense Fund, November 7, 1977.

31. "Public Meeting—Regulation of Carcinogenic Air Pollutants," EPA Internal Memorandum from Joseph Padgett to Walter C. Barber, May 17, 1978.

32. "Summary of Responses and Proposals—Testimony and Written Submissions," U.S. EPA Public Hearings on Regulation of Carcinogenic Air Pollutants, Washington, D.C., March 23, 1978.

33. "Testimony on OSHA's Generic Carcinogen Proposal," American Industrial Health Council, New York, May 16, 1978.

34. "Quantitative Risk Assessment for Ambient Exposure to Arsenic," U.S. EPA Carcinogen Assessment Group, November 27, 1978.

35. "Smoking and Health: A Report of the Surgeon General" Public Health Service, U.S. DHEW, January, 1979.

36. I. J. Selikoff, E. C. Hammond, and J. Churg "Asbestos exposure, smoking, and neoplasia" JAMA 204(2): 106, April 8, 1968.

37. "Asbestos Exposure, Cigarette Smoking, and Death Rates" E. C. Hammond, I. J. Selikoff, and H. Seidman. Presented at the International Conference on Health Hazards of Asbestos Exposure, New York Academy of Sciences, June 24, 1978.

[Note.—This Supplemental Statement will not appear in the Code of Federal Regulations.]

Policy and Procedures for Identifying, Assessing, and Regulating Airborne Substances Posing a Risk of Cancer

Supplemental Statement of Basis and Purpose

This document is intended as an elaboration of three aspects of the basis and purpose of EPA's proposed rule for the regulation of airborne carcinogens. It should be read in conjunction with the preamble to the Notice of Proposed Rulemaking for this action, which it supplements. The three aspects of the background of the proposal which are discussed in this supplement are: (1) a comparison of the EPA proposal with recent proposals of other Federal agencies for regulating carcinogens; (2) various regulatory approaches considered by the Administrator in formulating the proposed rule; and (3) a fuller explanation of the underlying view of the meaning and intent of section 112 of the Clean Air Act which led the Administrator to choose the standard-setting approach actually proposed.

I. Comparison With Other Proposals

The policies and regulatory approaches reflected in EPA's proposed rule are similar in many important respects to those contained in recent proposals by the Occupational Safety and Health Administration (OSHA) (*1*) and the Consumer Product Safety Commission (CPSC) (*2*). There are also a number of similarities to proposals made to EPA and other agencies by the Environmental Defense Fund (EDF) (*3*) and to some extent by the American Industrial Health Council (AIHC) (*4*). The most important similarities and differences among the various proposals are described below.

The critical areas for comparison of the various proposals are: (1) the scientific criteria underlying determinations of carcinogenicity for regulatory purposes; (2) the use of those criteria in automatic classification systems; (3) the regulatory response to determinations of carcinogenicity; and (4) the role of quantitative risk assessments.

A. Carcinogenicity Criteria

The scientific criteria for determination of carcinogenicity under the OSHA, CPSC, and EDF proposals are similar to the EPA Interim Guideline for Carcinogen Risk Assessment (*5*). All accept epidemiology as best evidence but presume human cancer risk as a result of animal data alone. All accept the principle that there is no safe level of exposure to carcinogenic substances. Differences between the EPA and OSHA criteria are discussed in some detail in the EPA testimony at the OSHA hearing. The major difference is that EPA may consider the results of a single well-conducted animal study as sufficient to classify a substance a high probability carcinogen, while the OSHA proposal requires replication of such a study or a second "postive" study in a different species. EPA feels that such a requirement is scientifically unnecessary where the original study is of sufficient quality and could result in unnecessarily long delays while retesting takes place.

Although the general scientific principles are similar, the OSHA and CPSC statements are considerably more specific on a number of points than are the EPA guidelines. EPA believes that greater specificity and agreement among the agencies are desirable, where possible, and has joined with the Occupational Safety and Health Administration (OSHA), Consumer Product Safety Commission (CPSC), Food and Drug Administration (FDA), and Food Safety and Quality Service (FSQS) in the Interagency Regulatory Liaison Group (IRLG) for the purpose of developing a uniform scientific basis for determining the probability that a substance is carcinogenic. The IRLG has recently published a document dealing with these issues (*6*). Once the document becomes final, the rule proposed today will be amended if necessary and those principles will be used by EPA in regulating airborne carcinogens under section 112.

There are a number of differences between the methods recommended by AIHC for carcinogenicity determinations and EPA's Interim Guideline. In particular, AIHC suggests that greater weight be given to negative epidemiological studies; that single-species animal studies are insufficient to make a presumption of human carcinogenicity; and that short-term test results are unsuitable for use in regulatory decisions.

EPA feels that while "negative" epidemiological evidence can sometimes provide upper bounds on possible risks, epidemiology is normally not a sensitive enough tool to provide proof that a substance which is carcinogenic in animals is not carcinogenic in humans. EPA considers well-conducted single species tests and single tests results substantial evidence of carcinogenicity. Such tests are widely used in industry and government laboratories. In light of the available evidence, delaying the implementation of controls for three or more years while confirmatory tests are conducted would not be a prudent policy. The Agency feels that existing experience with short-term tests is sufficient to suggest including results along with other evidence in deciding the likelihood of carcinogenicity. In summary, EPA feels that, given the available scientific evidence, protection of public health requires the use of the criteria outlined in the Interim Guideline.

The AIHC also recommends establishment of a nine-member panel to evaluate and classify carcinogens for all Federal agencies, suggesting that identification and classification of carcinogens is too important and too complicated to be left to government regulators alone. EPA believes, however, that there would be little advantage to this approach. Agreement among the IRLG agencies should make it unlikely that these Federal agencies would reach inconsistent conclusions about a substance's carcinogenicity. Having a single group—whether it be one agency or an outside group of scientists—perform these evaluations would only add another layer of review, which could create serious problems. Among other things, establishing priorities that would accomodate the needs of all affected agencies with their many different regulatory responsibilities and deadlines would be complex and resource-intensive. In addition, if an outside group of scientists were used to evaluate cancer risks, the scientists might be reluctant to take positions on substances for which data are not definitive. This would conflict with the agencies' obligation to act upon the best available information rather than to await definitive evidence. Finally, it should also be noted that current EPA procedures include an evaluation of carcinogenicity determinations and risk assessments by the EPA Science Advisory Board, a review panel consisting of scientists from outside of the Federal government.

The AIHC makes no clear recommendation on techniques to be used in evaluating excess cancer incidence other than to recommend that carcinogen strength and cancer risks be evaluated as part of the regulatory process. As EPA's proposal indicates, the Agency agrees that carcinogenic strength and risk should play a role in that process.

B. Classification Systems

In testimony at the OSHA hearings, EPA articulated its reservations about the use of rigid, fixed criteria and automatic classification schemes. EPA is concerned that, since each determination is to some extent unique, rigid classification schemes may not provide enough room for the use of informed scientific judgment in making carcinogenicity determinations. Examples of the Agency's concerns are discussed in the EPA testimony (*7*). EPA, therefore, prefers to continue to use a "weight of evidence" approach which allows the use of informed

scientific and policy judgments in evaluating test results.

C. Response to Determinations of Carcinogenicity

Under the policy proposed by OSHA (upon which the EDF petition is modeled), substances classified as "confirmed carcinogens" would be automatically regulated through an immediate emergency temporary standard including exposure limits, monitoring, and work practices. Within six months, a permanent standard would be proposed to: (1) effectively ban the substance if a suitable substitute were available and (2) require exposures to be reduced to lowest feasible level through technological means.

The approach published by the CPSC establishes procedures for identification and classification of carcinogens based on scientific criteria and categories similar to those proposed by OSHA. A major difference between the CPSC and OSHA approaches is that if a substance is identified as a confirmed carcinogen ("Category A"), CPSC would not automatically propose a particular regulatory action. Instead action would be taken on a case-by-case basis, after a study of relevant factors.

EPA believes that the appropriate regulatory response following the listing of an airborne carcinogen under section 112 must take into consideration more than a determination of carcinogenicity. Given the large number of potential airborne carcinogens, some means of establishing priorities for regulating those substances posing the greatest public health risks is necessary to ensure that available Agency resources are used to the greatest effect. The set of initial regulatory responses in the proposed EPA rule is designed to accomplish that by accelerating the process of listing and initial regulation, and by enabling the Agency to address the most significant sources and substances first.

The CPSC policy also recognizes the need for such procedures. The system for setting priorities for assessment proposed by EPA is conceptually similar to that adopted by CPSC for establishing priorities for staff evaluation and Commission appraisal of consumer products containing carcinogens.

The OSHA and EDF proposals do not contain explicit procedures for the establishment of priorities after carcinogenicity determinations. Those proposals would entail a fairly rigid schedule of regulatory responses to notification or discovery of potential carcinogenicity. After carcinogenicity determinations, both the OSHA and EDF schemes would require automatic responses without explicit consideration of risks or other indices of relative priority.

One element of the OSHA proposal is the immediate imposition of an emergency temporary standard. The response is somewhat analogous to the "generic standards" element of today's proposal. Like OSHA, EPA believes that there is no reason to permit the continued exposure to risks which could be prevented by the use of clearly feasible control measures. EPA views the implementation of such measures as a high priority matter, especially since the application of pre-existing generic standards to specific sources will not divert significant Agency resources from other control efforts.

EPA also believes, however, that a system for establishing priorities for further regulatory actions is necessary in effectively implementing section 112. The Agency does not believe that a full system of automatic responses, such as that proposed by OSHA, would be feasible for use under section 112, both because of the large number of airborne carcinogens likely to be encountered and because of the differences in the statutory and practical tasks EPA must perform.

D. Role of Quantitative Risk Assessment

It is not celar what role, if any, quantitative risk estimates would play in the approach OSHA intends to employ. As noted earlier, EPA believes that, while cancer risk estimation is an imprecise endeavor involving many uncertainties, such estimation can provide a rough measure of the magnitude of carcinogenic risk posed by a substance. EPA believes that consideration of such estimates in establishing regulatory priorities and in determining the degree of additional control required beyond BAT is both useful and appropriate under section 112. This is particularly true in the Administrator's view with respect to exposures to carcinogens in the ambient environment, which, in contrast to occupational exposures, can often be very low and involve large populations. Like OSHA, however, EPA does not view these estimates as required for the decision that a particular substance being emitted into the air should be regulated as a hazardous pollutant, once a determination of probable carcinogenicity and significant exposure has been made.

II. Various Regulatory Approaches Considered

A central issue in developing a policy for the protection of public health from carcinogens is the determination of the extent to which exposures must be reduced. Given the impossibility of identifying levels of carcinogens with no associated risk, some have argued that no exposure should be tolerated and that emissions should be reduced as expeditiously as practical to zero. Others contend, on the contrary, that permissible exposures should be determined by an unstructured balancing of risks, costs, and benefits.

A number of approaches for addressing this problem have been considered or proposed by the Federal regulatory agencies, industrial groups, environmental organizations, and others. Prominent examples include the OSHA proposal 1, the CPSC policy (2), and the EDF petition (3) on airborne carcinogens. This section discusses various suggested possibilities that have been considered by EPA, as well as the approach proposed today.

The possibile approaches and schemes suggested fall into essentially four groups: zero-oriented approaches; predetermined decision rules; special approaches for new sources; and judgmental approaches. The charcteristics of these approaches are discussed below in terms of their possible usefulness in regulating carcinogens under section 112 of the Clean Air Act.

A. Zero-Oriented Approaches

As discussed above, the lack of identifiable health effects exposure thresholds for carcinogens suggests that exposure to even minute amounts of such substances poses some finite risk, and that repeated exposures increase the risk. This has led to the proposition that for public health purposes, no level of exposure to carcinogens can be considered absolutely "safe." In particular, because section 112 emission standards must protect the public health with an ample margin of safety, it has been argued that those standards must therefore eliminate risk completely.

The Administrator believes that his goal in administering section 112 must be to reduce exposures to carcinogens to the maximum extent possible. While this implies at least a theoretical goal of zero emissions of these substances, the immediate imposition of zero-emission requirements would lead to the closing of most facilities now emitting carcinogenic air pollutants. It is not now physically possible, for example, to manufacture, handle, and store volatile organic compounds without some emissions, however small.

As noted earlier, the Administrator does not believe that the immediate imposition of zero-emission standards on a general basis, with their attendant consequences, is appropriate under section 112. Nevertheless, in setting section 112 emission standards, public health considerations must be paramount. Various mechanisms designed to minimize risk as part of certain zero-oriented approaches may therefore be useful for purposes of section 112. These mechanisms include:

(1) *Immediate Emission Control Requirements Beyond the use of Best Available Technology.* Standards more restrictive than those achievable through the use of "best available technology" for existing sources, effective within between ninety days and two years of promulgation, could result in the closure of some sources.[11] Depending on the degree of additional control judged necessary, and on particular economic and technological factors, this could range from a few older, marginal facilities to industry closure. Such requirement may be appropriate where large residual risks remain after the use of best available controls.

(2) *Phased Control Requirements.* Although standards requiring controls beyond "best available" might not be immediately feasible for certain affected emission sources, such controls might be feasible if sufficient lead time were available before their required achievement. A form of phased control requirements, designed to force technology improvements, is suggested by EDF in its petition. This approach would involve establishing a predetermined schedule for periodic tightening of emission standards, leading ultimately to zero emissions. EPA

[11] The meaning of the term "best available technology" as used here, is explained in the principal text accompanying the proposed rule.

does not regard this particular form of phased control as well-suited for use under section 112, primarily because it fails to provide for consideration of the consequences of a zero-emissions requirement in differing circumstances, and because it could prove legally and practically infeasible for the Agency to implement.

The concept of technology forcing phased control has, however, been used in achieving ambient air standards and reducing automotive emissions, and may be employed on a more selective basis under the proposed rule. Such requirements might entail somewhat accelerated closure of older, poorly controlled plants, allowing time for funding and construction of better controlled facilities and the development of improved control technology. This approach could result in reduction of risks without extensive economic dislocation or loss of the benefits associated with the activity or substance involved.

(3) *Required Use of Substitutes.* The availability of safe and adequate substitutes for particular substances or uses can be an important factor in determining the degree of control required for a given source category. It has been suggested, in fact, that in order to eliminate emissions of the carcinogenic substance the use of substitutes should be required whenever they exist.

The main difficulty with this approach is that while partial or full substitutes are often available, their consequences vary greatly. In many cases, for example, requiring the use of substitutes can result in prohibitive economic penalties. Substitutes available for some applications are also often inadequate for other applications. Moreover, the potential health effects associated with substitutes will often be unknown. Since adequate substitutes are often similar to the original substances, they may therefore pose risks which could approach or exceed those of the banned substances.

In addition, because carcinogens can be emitted in varying amounts from such diverse sources as fireplaces, chemical plants, automobiles, dry cleaning establishments, steel manufacturing, and natural chemical and radioactive emission sources elimination of carcinogenic risks through substitution for all these activities is clearly impractical. Substitutes cannot therefore be realistically considered a solution for all or even most airborne carcinogen problems.

In establishing control requirements under section 112, consequently, EPA would consider measures requiring the use of substitutes. In reaching a decision, however, the Agency will also weigh the factors noted above to ensure that the net effect of such requirements is consistent with the other aspects of the proposed rule.

B. Predetermined Decision Rules

A number of approaches, rejecting the zero risk concept, suggest that the appropriate degree of control can be determined through uniform decision rules, applied irrespective of individual circumstances. While such decision rules vary widely in their relative emphasis on factors such as risk, cost, benefits, and technology, they share the central premise that regulatory consistency can be achieved by prescribing in advance the weight to be assigned to each of these factors under all circumstances.

Although regulatory consistency is desirable, decisions made according to predetermined rules are often unable to account adequately for unforeseen or varying circumstances. Because of the difficulty in anticipating all possible combinations of the relevant factors, decisions bound by such rules will frequently fail to produce desirable regulatory results.

EPA feels that while it is important to articulate the way in which relevant factors will be considered and weighed in determining control requirements for airborne carcinogens, the complexity and unpredictability of the situations that may arise dictate that some flexibility be maintained. Predetermined decision rules will therefore not form the principal basis for determining control requirements for airborne carcinogens under section 112. Nevertheless, some elements of decision rule approaches may be useful as benchmarks or guidelines. These approaches are discussed below.

(1) *Specification of a Fixed Target Carcinogenic Risk or Incidence Level.* This approach involves the selection of a target level of cancer risk or incidence for purposes of regulatory action, and is based on the use of quantitative risk assessment techniques. Under this approach, a fixed numerical risk or expected cancer incidence rate target would be used in determining the degree of control required for carcinogens.

The use of target risk levels does have some precedent as a basis for regulatory decisions. The FDA, for example, has regarded an upper bound lifetime cancer incidence rate of less than one per million people exposed to carcinogenic residues in certain foods as "virtually safe". EPA could theoretically establish a similar goal for airborne carcinogens for use under section 112. If the predicted risk or incidence were higher than the target, the degree of control required would be that needed to reach the goal.

While this approach might be consistent with the requirement that section 112 standards place primary emphasis on protection of public health, it suffers from two drawbacks. First, although current quantitative risk assessment techniques for chemical carcinogens are useful decisionmaking tools, considerable uncertainties are associated with the techniques at their current stage of development. Consequently, the Administrator believes that in using quantitative risk assessments, he should generally be free to consider the varying degrees of uncertainty that actual cancer risks may be significantly above or below those predicted by the estimation procedures, and not be bound by a fixed target.

Second, a fixed target risk level, used as the determinant of emissions standards, would also inadequately account for the varying conditions characteristic of air pollution. The suggested use of target risk levels instead of a zero-risk requirement is based on the importance of considering the various consequences of incremental risk reductions to levels approaching zero, and it would be inconsistent with this basis to use a fixed target risk level, irrespective of these varying consequences, in setting standards. These consequences differ greatly among source categories of air pollutants, and a fixed target fails to provide the flexibility necessary for an appropriate response. Where risks could be reduced beyond the target without significant costs, for example, that should be permitted. Likewise, where attainment of the goal would eliminate a highly beneficial activity, the decision-maker should be able to consider less stringent standards.

(2) *"Cost-Per-Life" Goals.* Some have suggested that "acceptable" standards for carcinogens may be developed by striking a predetermined balance of health risks, human lives, economics, and social benefits. Fundamental to this approach is the expression of all these factors in economic terms and the adoption of a cost-per-life-saved goal. Under this decision rule scheme, regulations would require control to, but not beyond, the point where the incremental costs associated with saving an additional life were equivalent to the goal. Proponents of this approach argue that it would result in a more optimal allocation of national resources.

The Administrator believes that several aspects of this approach render it unsuitable for standard-setting under section 112. One such aspect is the basic assumption that it is appropriate to assign a single monetary value to human life. The Administrator regards that task as neither practical nor ethically acceptable. It is impractical because no consensus criteria exist which can be used to establish that cost value. Indeed, the internalized and external expenditures for protection of human lives in American society ranges across a vast spectrum, and the very existence of this spectrum is persuasive evidence that the society places heavy emphasis on the surrounding circumstances in "assigning" health protection values. The approach is also unacceptable in that it fails to consider the balance of equities between those benefiting from the activity creating the risk and those who may die as a consequence of the activity. Finally, the fixed-cost approach also necessarily ascribes more certainty to the risk assessment and cost estimates underlying its use than is justifiable, in view of the uncertainties present in both sets of estimates. Therefore, although cost-per-life estimates may be used for perspective in considering control options, they will not be used as decision rules in setting standards under section 112.

(3) *"Best Technology".* Requirements for "best" control technology for emission sources have been advocated as an interim or ultimate approach which can be used without difficult considerations of economics in determining the degree of control required. Although such a technology-based approach at first appears relatively simple to implement, it is soon apparent that "best available technology" cannot be defined by technical considerations alone. For example, if an "add-on" control device achieves 90% control, then the installation of an additional unit of similar capabilities could reduce

remaining emissions by an additional 90%. Still further units could always be applied to marginally reduce emissions. Clearly, at some point in this process the costs associated with marginal increases in control would be grossly disproportionate to the incremental reductions in emissions. Thus, "best available technology" must be defined with at least some reference to economic considerations, as in the case of new source performance standards under section 111 of the Clean Air Act.

"Best available technology" as defined in section 111 of the Clean Air Act may not be an adequate level of control for purposes of section 112, however, since "best available technology" does not consider the health risks remaining after its use. While "best available technology" may prove a useful starting point, therefore, it is not itself sufficient for section 112 purposes without consideration of the residual health effects.

C. Special Approaches for New Sources.

A number of approaches and mechanisms have been suggested to contain or minimize increases in risks which may be associated with operation of new sources of carcinogenic air pollutants. It has been argued that special requirements for new sources are both necessary and justified because (1) given existing uncertainties about the health effects associated with exposures to various levels of carcinogens, those exposures should be limited as much as possible, and (2) new sources can reasonably consider control and risk avoidance options not readily available for existing sources. Several mechanisms for treatment of new sources are discussed below.

(1) *Stricter Standards for New Sources.* This approach would specify control requirements for new sources that are more stringent than those for existing sources. In effect, this is simply a modification of the best technology approach discussed above. The approach does have the advantage of limiting emissions from new facilities to a greater degree than from existing facilities under a best technology standard, and in that sense can be said to contain the risk somewhat.

The approach could also involve consideration of residual risks associated with projected typical new source siting conditions. However, because it cannot consider the residual health risks associated with all of the varying sets of population distributions in which a new source might actually be located, the approach may not provide sufficient protection under actual conditions. Thus, like the best technology approach for existing sources, this approach can serve as a useful starting point, but is not sufficient alone.

(2) *Regional Emissions Offsets.* An "offset" policy would require a reduction in emissions of a given carcinogenic air pollutant from existing sources in an area as a precondition for construction of new sources within a specified distance of the existing sources. To the extent that new sources desire to locate near existing facilities, development of improved emissions control technology would be encouraged by this approach and increases in risk to health beyond existing levels would be prevented.

The disadvantages of this approach as a general policy are that it would have no effect at all on the establishment of sources at new locations, and could prevent the expansion of sources which have already installed advanced technology or do not present significant new risks. In short, it employs the somewhat arbitrary assumption that any increased risk in an area with existing sources is not tolerable, but that increased risks in areas with no existing sources are permissible.

(3) *National Emissions Freeze.* Under this option, additional emissions from new or modified sources would be prohibited except to the extent that offsets are obtained from existing sources on a nationwide basis. This approach would account for some of the disadvantages of the regional emissions offset approach. It also provides incentives for technology-forcing and containment of risk.

The main drawbacks of the approach are that it presumes that any additional emissions create an intolerable risk, and that it would fall the most heavily on the newest industries (those with the fewest existing sources) and on those which have already forced technology the most. It also fails to provide incentives for careful siting of new sources.

(4) *Case-by-Case Review of New Sources.* Under this approach, additional emissions in populated or high risk areas would be permitted only after consideration of residual risks and other relevant factors associated with each new source proposed. In this review, special emphasis would be placed on appropriate siting and the use of improved control measures.

By evaluating risks, benefits, controls, and siting on a case-by-case basis, this approach could significantly limit risk without arbitrariness and over-regulation problems of either regional or nationwide offset requirements. Yet by requiring individual reviews, the pressure is maintained for both careful siting of new sources and improving technology where that appears necessary.

D. Judgmental Approaches

In contrast to the zero-oriented and fixed-decision rule approaches outlined above, "judgmental" approaches posit that the degree of control which is appropriate for airborne carcinogens cannot be predetermined in the abstract for all cases and, to some extent, depends on the particular circumstances. Circumstantial factors which might be considered, in addition to the risk to public health, include the costs of further control, the benefits of the activity, the distribution of risk versus benefits, and the availability of substitutes.

The use of a judgmental approach appears desirable to the Administrator because it permits him to take advantage of the strong points of various available approaches without suffering their drawbacks. The specific approach chosen, however, must be compatible with the mandate of section 112 to put principal emphasis on public health protection, and each of the factors involved must be assigned a weight consistent with this principle.

Although protection of public health must be paramount, the relative importance of other factors can vary. Society may be willing to pay more for control or accept higher health risks associated with activities viewed as important or essential. The distributional aspects of control situations can differ even when the magnitude of risk, costs, and benefits are similar. Moreover, differing degrees of certainty in the cancer incidence, economic, and benefits estimates can call for different regulatory responses. Given this variety of circumstances and the frequent uncertainty of analyses, the Administrator believes that it is important to consider different situations on their own merits.

Judgmental approaches obviously place great responsibility on decisionmakers to weigh the relevant factors carefully and to reach judgments in the best interest of the public. The Administrator believes that such responsibility, while heavy, is unavoidable if protection of public health is to be maximized within the constraints of a world of finite resources. The policy contained in the proposed rule is based on these views.

III. Legal Basis for the Proposed EPA Approach

A. Congressonal Intent and the Characteristics of Airborne Carcinogen

The main question the Administrator has found it necessary to answer in arriving at the interpretation of section 112 reflected in today's proposal is whether Congress, in enacting that section, had any specific intent about how an ample margin of safety would be derived in setting standards for air pollutants with the characteristics of carcinogens. If Congress had a specific intent, that would of course be conclusive. If, on the other hand, the situation presented by regulation of airborne carcinogens under section 112 falls in the interstices of congressional intent, the Administrator is required by established legal principles to deduce and impute an intent in a reasonable way that is consistent with the overall purposes and scheme of the statues.[12]

(1) The focus of congressional attention: "threshold" pollutants. In answering this question, the Adminstrator has found it helpful to recall the pollution problem that Congress perceived and addressed in 1970, when section 112 was enacted as part of a major revision of the entire Act. The legislative history of the Clean Air Amendments of 1970 reveals that the attention of Congress was at that time fixed primarily on the two problems perceived to be at the heart of the air pollution crisis: stationary source emissions of various widely prevalent pollutants such as sulfur dioxide, particulate matter, and photochemical oxidants; and automotive emissions of some of the same pollutants. The statutory scheme constructed for dealing with these pollutants reflected congressional recognition of the view that the pollutants have exposure thresholds for adverse health effects; that is, levels below which exposure to the pollutants

[12] See, e.g., *Maurning v. Family Publications Serv., Inc.*, 411 U.S. 356, 371–373 (1973); *Morton v. Ruiz*, 415 U.S. 199, 231 (1974); *United States v. Southwestern Cable Co.*, 392 U.S. 157, 171–173 (1968); *International Harvester Co. v. Ruckelshaus*, 478 F.2d 615, 643 (D.C. Cir., 1973).

would not be expected to result in adverse health effects[13]

Because it is seldom scientifically feasible to identify precisely the levels at which thresholds occur, the location of a threshold must be estimated somewhere below the exposure level (the "demonstrated effects level") at which adverse health effects have been found to occur in empirical research. Congress therefore required in section 109 of the Act that "margins of safety" be established to protect against unknown dangers below the demonstrated effects levels.[14] The Administrator believes that Congress intended health effects to be the only consideration in setting standards under section 109 under these circumstances, and this view has governed the establishment of national ambient air quality standards (NAAQS) under section 109 to date.[15]

Congress also incorporated the "margin of safety" concept, used in section 109 in dealing with the widespread apparent threshold pollutants that were at the forefront of its awareness into the requirements of section 112. The Administrator believes that this incorporation reflects both a parallel intent and parallel assumptions. Thus section 112 standards set to protect against adverse health effects characterized by a threshold must also be based solely on health,[16] with an "ample" rather than an "adequate" margin of safety to account for the greater severity of the pollutants involved.[17] The apparent underlying congressional assumption, however—the existence of thresholds—also leads the Administrator to believe, in the absence of significant contrary indications, that Congress did not specifically foresee or address the problems inherent in applying the margin of safety concept to air pollutants under fundamentally different circumstances.

(2) The carcinogen problem: no apparent thresholds. Regulation airborne carcinogens under section 112 does require the application of the margin of safety concept under fundamentally different circumstances. Although carcinogens, as air pollutants which may cause an increase in mortality, are clearly among the pollutants that the Administrator is required to regulate under section 112 of the Act, carcinogens must also (for the reasons discussed earlier) be regarded for public health purposes as having no identifiable adverse health effects thresholds. The method used to establish a margin of safety for a threshold pollutant—setting the standard somewhere below the demonstrated effects level at a point at which the absence of adverse health effects is predicted—therefore cannot be used to set standards (other than at zero) for carcinogens under section 112, since risk of cancer is believed to exist at any exposure level greater than zero.

In establishing margins of safety for carcinogens, therefore, the task is to determine how low the risk of the occurrence of cancer in an exposed persons or the projected incidence in an exposed population must be driven before a margin of safety can be considered ample to protect the public health. Only two approaches are available for performing this task: either the emission standards must be set at zero to eliminate the risk of cancer incidence altogether, or some residual risk must be permitted. Because Congress did not give specific consideration to this problem, the Administrator does not believe that section 112 expresses an intent to eliminate totally all risks from emissions of airborne carcinogens.[18] Section 112 standards which permit small residual risks can, in the Administrator's judgment, therefore provide an ample margin of safety to protect the public health.

(3) *The consequences of a zero-risk requirement.* This view is based on several additional factors. Foremost among these is the belief that if Congress had intended the drastic results that would flow from a requirement to eliminate all risk from emissions of carcinogens, it would have spoken with much greater clarity.[19]

A requirement that the risk from atmospheric carcinogen emissions be reduced to zero would produce massive social dislocations, given the pervasiveness of at least minimal levels of carcinogenic emissions in key American industries. Since few such industries could soon operate in compliance with zero-emission standards, closure would be the only legal alternative. Among the important activities affected would be the generation of electricity from either coal-burning or nuclear energy; the manufacturing of steel; the mining, smelting, or refining of virtually any mineral (*e.g.*, copper, iron, lead, zinc, and limestone); the maufacture of synthetic organic chemicals; and the refining, storage, or dispensing of any petroleum product.[20] That Congress had no clear intention of mandating such results seems self-evident.

The conclusion that Congress did not contemplate closure of the nation's basic industries, or even widespread industry closures, is also supported by the history and language of section 112. First, Congress in 1970 gave the subject of plant closures only brief consideration in connection with section 112.[21] While the legislative history makes clear that the Administrator is empowered to set standards under section 112 that result in plant or industry closures where appropriate,[22] it is by no means clear that Congress intended that result for all non-threshold hazardous pollutants, or even that Congress really focused on the problem.[23] Indeed, the very limited nature of the legislative history itself compels the conclusion that closure of the nation's basic industries, irrespective of the actual levels of risk involved, could not have been contemplated. That conclusion becomes even more inescapable in light of the 1977 Amendments, which added radioactive substances—long regarded as confirmed carcinogens and emitted from a wide variety of sources—to the coverage of the Act, with no mention anywhere of industry closures as the inevitable consequence.

The language of section 112 is also consistent with today's proposal. In using the phrase "margin of safety," Congress was borrowing a concept from the field of enginering,[24] where it had previously employed the term.[25] By prescribing the use of a margin of safety for the load factors of underground mine hoist cables in the 1969 Mine Safety Act, for example, Congress surely did not intend to suggest that the safety factor must guarantee a failure risk of zero. Indeed, no reputable engineer would say that even with a margin of safety an "adequately strong" hoist cable[26] presents a failure risk of absolutely zero.

Nor does the use of the term "safety" necessarily imply a zero-risk concept. Where Congress has intended to require safety from the risk of cancer to be absolute, it has known how to express that intention clearly, as it did in the Delaney Clause of the Food and Drug Act,[27] prohibiting the use of any food additive found to induce cancer in man or animal at any level of exposure. This provision was enacted years before section

---

[13] Some physiological responses (not producing adverse health effects) may occur at exposure levels below the thresholds.

[14] S. Rep. No. 91-1196, 91st Cong., 2d Sess., at 9-10 (1970).

[15] *See, e.g.*, 44 FR 8202 (February 8, 1979) (revisions of ozone standard). Although Congress has precluded consideration of the feasibility of attaining NAAQS in the standard-setting process, it has provided various means for feasilbilty factors to be considered in connection with control of the pollutants described in section 108. Control of pollutants listed under section 108 can take account of feasibility through opportunities for allocation of the burdens of control by the states under section 110, through delays in compliance under sections 113(d) and 119, and through attainment date extensions under section 110(e). Under section 111(d) of the Act, feasibility is taken into account directly in connection with control of certain similar, but less ubiquitous, pollutants emitted by discrete source categories.

[16] This view was recently endorsed in *Hercules, Inc. v. EPA*, F.2d——, 12 ERC 1376 (D.C. Cir., 1978).

[17] This construction of the difference between "adequate" and "ample" was recently expressed by the U.S. Court of Appeals for the District of Columbia circuit in *EDF (PCBs) v. EPA*,——F.2d——, 12 ERC 1353 (1978).

[18] While Congress apparently believed that some substances might be so toxic that any level of emissons should be prohibited (*see, e.g., A Legislative History of the Clean Air Amendments of 1970*, U.S. Government Printing Office, 1974, at 227) (Statement of Senator Muskie), it seems to have had in mind sustances so poisonous that essentially any ambient concentration would be expected to produce widespread serious health effects, rather than substances with the characteristics of carcinogens, which would produce only scattered, random health effects at very low concentrations.

[19] *Cf. Brown v. EPA*, 521 F. 2d 827, 834 (9th Cir., 1975), *vacated on other grounds*, 431 U.S. 99 (1977), opinion on remand, 566 F. 2d 665 (1977).

[20] One widespread, though non-industrial, activity that would also be affected is the buring of wood in home fireplaces.

[21] *See, e.g., Legis. Hist., supra*, at 133 (statement of Senator Muskie).

[22] *See, Legis. Hist., supra*, at 133 (statement of Senator Muskie); *Adamo Wrecking Co. v. U.S.*, 434 U.S. 275, 54 L. Ed. 2d 538, 555 (Stevens, J., dissenting).

[23] In fact, the congressional expectation in 1970 was apparently that only a few pollutants would untimately be found "hazardous" within the meaning of what became section 112. See, S. Rep. No. 91-1196, *supra*, at 20.

[24] See *EDF (PCBs) vs. EPA, EPA, supra*, slip opin. at 40.

[25] Federal Coal Mine Health and Safety Act of 1969, 314(a), 30 U.S.C. § 874(a); *see also* 30 CFR 75.1401-1 (1977).

[26] 30 U.S.C. 874(a).

[27] 21 U.S.C. 348(c)(3)(A).

112, and the absence of comparable specificity in section 112 suggests that "an ample margin of safety to protect the public health" need not be interpreted as requiring the complete elimination of all risks.[28]

In interpreting the margin of safety concept in section 112 of the Clean Air Act, moreover, there is no reason to believe that Congress intended to make air pollution practically the sole facet of American life from which the government would attempt to eliminate risk entirely.

Not only is there no indication, as noted above, that Congress considered the inevitable consequences of such a decision, but such an interpretation would also be quite incongruous in view of the provisions of numerous other public health statutes enacted during or since 1970. These statutes deal with, among other things, environmental carcinogens to which people are equally or more exposed, and they all permit consideration of factors other than risk in setting standards or taking comparable actions.[29]

In particular, the recent enactment of the Toxic Substances Control Act, which was intended to address the problem of toxic substances comprehensively, supports the view that where Congress has specifically considered the problem of reducing risks posed by environmental exposure to carcinogens, it has not required complete elimination of those risks. Taken together, the Administrator believes that these statutes provide strong evidence that the complete elimination of risk from environmental exposure to carcinogens is not the task with which he has been charged by Congress.

B. *Ample margins of safety under section 112.* For reasons stated previously, the Administrator has concluded that section 112 does not require him to base all emission standards for carcinogens on a criterion of zero risk from exposure to such substances. Once that proposition is accepted, at least limited consideration of factors other than the level of risk itself is unavoidable, since some criteria are needed in order to judge whether or not the degree of public health protection associated with a particular standard is "ample." [30]

The Administrator believes that section 112 clearly requires this determination to be based primarily on risk. The Administrator also believes, however, that he may consider other social and economic factors in determining whether an ample margin of safety is provided by a given control level. These factors include the benefits of the activity or substance producing risk; the distribution of the benefits versus the distribution of the risks; the availability and possible environmental risks of substitutes for that substance or activity; and the cost of reducing the risks further.

The rule proposed today will provide an ample margin of safety in several ways, consistent with this view. First, it protects against the unknown dangers of low-level exposures to airborne carcinogens by treating them as pollutants presenting risks even at low exposure levels. Next, it places primary emphasis on risk in establishing standards for sources regulated under section 112, and therefore requires at a minimum that such sources use best available technology to reduce cancer risks from their emissions. Beyond that, additional control measures will be required to eliminate residual risks judged unreasonable in light of the factors noted above. If necessary, this could entail closure of a source or even an industry, although the Administrator is not now aware of any source category whose carcinogenic emissions would be likely to require industry closure.

The proposal would also carry out the public health mandate of section 112 in two additional ways: first, by quickly imposing generic standards where possible to eliminate swiftly certain existing sources of carcinogenic emissions; and second, by applying the unreasonable risk criterion to contain the risks posed by emissions from new sources. The Administrator believes that provisions dealing specifically with the otherwise unpredictable increases in risks posed by emissions from new sources are a necessary element of a policy under section 112 that requires the elimination of unreasonable residual risks. The Administrator also regards these provisions as consistent with, if not required by, the policy of the Act to afford maximum public health protection b preventing significant increases in exposure to pollutants regulated by the Act.[31]

Finally, since the issues posed by today's proposal have not yet been judicially resolved,[32] the Administrator regards the foregoing analysis of the requirements of section 112 as a valid exercise of his discretion to interpret the meaning of these complex provisions of the Act.[33] The interpretation of section 112 stated here is the first detailed analysis the Administrator has published of the application of the section to regulation of airborne carcinogens. It is, however, consistent with his initial (and subsequent) actions in regulating asbestos, the first substance regulated under section 112 in part for carcinogenic effects. In that initial rulemaking, despite the absence of a known threshold level for carcinogenic effects, the Administrator explicitly considered the technological and economic importance of certain uses of asbestos and decided that, although a certain "minimal risk to the public" would probably remain, emissions from certain of those activities should be allowed to continue.[34]

EPA also considered such factors in establishing emission standards for vinyl chloride, the only other substance for which emission standards have been set under section 112 to control carcinogenic effects. The interpretations of section 112 published in connection with that action are consistent with, though not as detailed as, the analysis appearing here.[35] Those interpretations were reiterated, and the health-based nature of section 112 emphasized, in a proposal to amend the vinyl chloride standards.[36] These publications make clear the Administrator's consistent view that section 112 requires him to focus principally on health risks in regulating airborne carcinogens, but that it does not require the elimination of all risks from carcinogens in establishing an ample margin of safety to protect the public health.

References

1. Occupational Safety and Health Administration, Identification, Classification and Regulation to Toxic Substances Posing a Potential Occupational Carcinogenic Risk, 29 CFR Part 1990, 43 FR 54148, October 4, 1977.

2. Consumer Products Safety Commission, "Interim Policy and Procedure for Classifying, Evaluating, and Regulating Carcinogens in Consumer Products", 43 FR 25658, June 13, 1978. Withdrawn, 44 FR 23821, April 23, 1979.

3. "Petition for the Initiation of Rulemaking Proceedings to Establish a Policy Governing the Classification and Regulation of Carcinogenic Air Pollutants under the Clean Air Act," Environmental Defense Fund, November 7, 1977.

4. "Testimony on OSHA's Generic Carcinogen Proposal," American Industrial Health Council, New York.

5. EPA, "Health Risk and Economic Impact Assessments for Suspected Carcinogens', Interim Procedures and Guidelines, 41 FR 21402, May 25, 1976.

6. "Scientific Bases for Identification of Potential Carcinogens and Estimation of Risks" Report by the Work Group on Risk Assessment of the Interagency Regulatory Liaison Group (IRLG) 44 FR 39658, July 6, 1979.

7. EPA's Testimony on OSHA's Proposed Cancer Policy, presented at OSHA public hearings beginning May 16, 1978.

[FR Doc. 79-31302 Filed 10-9-79; 8:45 am]

BILLING CODE 6560-01-M

[28] That Congress might have chosen an absolute safety rule for food additives, but not for air pollution, is quite plausible on policy grounds. *Cf.* Doniger, "Federal Regulations of Vinly Chloride," 4 *Ecology Law Quarterly* 497, at 656–658 (1978).

[29] *See*, Federal Insecticide, Fungicide and Rodenticide Act, as amended, 7 U.S.C. 136a *et seq.*; Toxic Substances Control Act, 15 U.S.C. 2601 *et seq.*; Safe Drinking Water Act, 42 U.S.C. 300f *et seq.*; Clean Water Act, as amended, 33 U.S.C. 1251 *et seq.*; and Occupational Safety and Health Act of 1970, 29 U.S.C. 651 *et seq.*

[30] As discussed above, this conclusion is of course limited to situations where standards cannot be set on the basis of an adverse health effects threshold. Where standards can be set on that basis under section 112, factors other than health effects need not and may not be considered.

[31] *See*, §§ 101(b)(2) and 160–169 of the Act, 42 U.S.C. 7401(b)(2) and 7470–7479, H.R. Rep. No. 95–294, 95th Cong., 1st Sess. at 103–178 (1977). The Administrator has previously expressed his view that new sources of carcinogen emissions should not be allowed to create significant new risks to exposed populations, 42 FR 28154, 28156 (June 2, 1977), and that new sources should be required to use improved emission control techniques, *Id.* at 28155.

[32] The Administrator does not regard the *EDF(PCBs)* and *Hercules* cases noted above as controlling precedent for the interpretation expressed here. Neither of those cases involved regulations promulgated under section 112, and neither dealt with the primary question involved here, the regulation of carcinogens—nonthreshold pollutants—under the Clean Air Act.

[33] *See, e.g.*, *Train* v. *NRDC*, 420 U.S. 60 (1975).

[34] *See* 38 FR 8820 (April 6, 1973).

[35] *See* 40 FR 59532, 59534, 59535–59536 (December 24, 1975); 41 FR 46560, 46561–46562 (October 21, 1976).

[36] *See* 42 FR 28154 (June 2, 1977).

40 CFR Part 61

[FRL 1254-2]

National Emission Standards for Hazardous Air Pollutants; Advance Notice of Proposed Generic Standards

AGENCY: Environmental Protection Agency (EPA).

ACTION: Advance notice of proposed rulemaking.

SUMMARY: This notice sets forth draft generic standards that EPA may propose for sources of carcinogenic organic chemicals that are listed as hazardous air pollutants under section 112 of the Clean Air Act. Elsewhere in this issue of the Federal Register EPA is proposing a policy for the identification, assessment and regulation of airborne carcinogens under section 112. Under this policy, EPA would employ generic standards where applicable to reduce emissions of airborne carcinogens. These generic standards would be proposed simultaneously with the listing of a carcinogen as a hazardous air pollutant. The intent of this notice is to solicit comment on the generic standards EPA is currently developing.

DATES: Written comments and information should be postmarked on or before December 10, 1979.

ADDRESSES:

Comments: Written comments and information should be submitted to the Central Docket Section (A-130), U.S. Environmental Protection Agency, Attn: Docket No. A-79-13, 401 M Street, SW., Washington, D.C. 20460.

Docket: Docket No. A-79-13, containing material relevant to this rulemaking, is located in the U.S. Environmental Protection Agency, Central Docket Section, Room 2903B, 401 M Street, SW., Washington, D.C. 20460. The docket may be inspected between 8:00 a.m. and 4:00 p.m. on workdays, and a reasonable fee may be charged for copying.

FOR FURTHER INFORMATION CONTACT: Environmental Protection Agency, Office of Air Quality Planning and Standards, Emission Standards and Engineering Division (MD-13), Research Triangle Park, North Carolina 27711, Attention: Mr. Don R. Goodwin, telephone number (919) 541-5271.

SUPPLEMENTARY INFORMATION: Section 112 of the Clean Air Act as amended, 42 U.S.C. 7412, requires EPA to regulate hazardous air pollutants by establishing emission standards and, where necessary, certain other measures to protect public health. The rapidly developing body of knowledge concerning toxicology indicates that many air pollutants, primarily in the form of airborne carcinogens, may present significant risks to public health. Many of these air pollutants will likely be volatile organic chemicals. The technical complexity and diversity of the organic chemical manufacturing industry and the stringency of Clean Air Act time limits on regulation of hazardous air pollutants indicate a need to improve EPA's regulatory procedures in this area. Accordingly, as a significant part of the program for regulation of airborne carcinogens contained in the rule proposed elsewhere in today's Federal Register, EPA is developing generic standards for use in reducing emissions of organic chemical carcinogens listed under section 112 in the future. The use of generic standards would provide a quick, first step in the regulation of organic chemical air carcinogens.

Generic Standards

Generic standards used to regulate emission sources of carcinogenic air pollutants are standards which are independent of process or chemical and are based on the similarity of operations and equipment throughout an industry, such as the organic chemical manufacturing industry. They can be applied to similar emission sources and represent reasonable and prudent measures a responsible plant owner or operator would take in dealing with a carcinogenic air pollutant.

Consistent with the mandate of section 112 that emissions of hazardous air pollutants be reduced quickly, generic standards would be proposed for applicable emission sources simultaneously with listing of a volatile organic chemical determined to be an airborne carcinogen. Depending on the nature of the listed organic chemical and the emission sources of this chemical, generic standards may require "tailoring" in certain cases to reflect unique or unusual situations. Generic standards and the rationale supporting those standards would be published in the Federal Register. Additional documents outlining and summarizing the information supporting the standards would not necessarily be published. However, supporting information would be available at the time of proposal for public inspection. This supporting information would include general assessments of the economic, energy, and environmental impacts of the proposed standards.

Proposal of generic standards for applicable organic chemical emission sources would be followed by a public comment period and an opportunity for a public hearing. EPA would evaluate the comments submitted during the public hearing and comment period, make appropriate changes to the proposed generic standards, and then promulgate the generic standards. Generic standards would be followed, in most cases, by proposal of additional standards. These additional standards would be developed under the rule proposed today for regulation of airborne carcinogens.

As EPA identifies and develops additional standards, an evaluation of the reasonableness of including these requirements in future generic standards will be made. As a result, the generic standards will evolve and become more extensive as EPA's experience and expertise increase.

Implementation of Generic Standards

As discussed below, the draft generic standards focus primarily on reducing fugitive emissions through the use of an effective leak detection and repair program. There are a number of possible approaches to implementing these generic standards. The first approach would be to require the attainment of specific performance levels by the sources regulated. For example to control fugitive emissions from pump seals, a performance level could specify that no more than a certain percentage of pump seals leak. Achievement of the performance level would be enforced through tests of pump seals in a plant to determine what percentage of seals were leaking. If more leaks were found than the percentage allowed by a performance level, the source would be out of compliance and enforcement action would be taken. This approach, therefore, would be similar to the approach followed in most existing new source performance standards and national emission standards for hazardous air pollutants. Because this approach would depend on testing, rigorous enforcement of the standards would be possible. This approach also would provide each plant with complete flexibility to institute its own method of achieving and maintaining compliance with the standards. Data to establish specific performance levels, however, is not currently available, although programs underway may provide some data which could be used for this purpose. If the data developed by these programs show that this approach is feasible, future generic standards may incorporate performance levels in some areas.

A second approach to implementing generic standards would be to specify that certain work practices be followed. For example, to control fugitive emissions from pump seals, the standards would specify (1) how often pump seals must be inspected for leaks,

(2) the detection technique and procedure for determining if a leak exists, and (3) the time period within which any leak found must be repaired. Compliance with work practice requirements would be enforced through examination of records kept by the plant showing that inspections were carried out, leaks detected, and repairs made. Compliance would be monitored through use of routine reporting. This approach would, of course, provide less flexibility to the plant owner or operator. The reliance of this approach on self-reporting and recordkeeping could make enforcing generic standards difficult. However, data and information are currently available which allow the development of work practice requirements.

A third approach to implementing generic standards would use the standards as guidelines. Guidelines would provide maximum flexibility in the actions by industry; each plant could tailor its method of locating and repairing leaks to its particular situation. Guidelines would also allow innovation in control techniques. Guidelines, however, would have no legal status. Therefore, EPA could not enforce compliance with guidelines. Given the nature of the problem presented by public exposure to hazardous air pollutants and the requirements of section 112, this approach is inadequate.

The Manufacturing Chemists Association (MCA) has suggested an approach similar to that of guidelines. MCA's approach would require owners and operators to prepare and implement plant-specific plans for reducing fugitive emissions of the hazardous air pollutant. The draft generic standards would serve as guidelines for developing these plans. Plans could depart from the guidelines if an owner or operator felt the departure was justified.

MCA's suggested approach is similar to an approach used by EPA in oil pollution prevention regulation (40 CFR Part 112) promulgated in 1973 and in hazardous substance pollution prevention regulation (40 CFR Part 151) proposed in 1978 under the Clean Water Act. This approach provides each plant with flexibility and allows innovation in control techniques. In the proposal, enforcement of this approach is triggered by an identifiable event, such as discharge of hazardous substances in harmful quantities as determined in 40 CFR Part 118, and focuses on a review of the effectiveness of the plan. Enforcement of this approach is enhanced by surprise inspections which focus on review of the plan. After review of a plan, an owner or operator may be required to amend the plan. Also, the owner or operator is liable for a civil penalty for violations of requirements of the regulation.

The plan preparation approach, if used to implement generic standards, would be enforced through review of a plan to determine the effectiveness of the plan. Review of each plan would be required at some point in time. The mechanism for triggering review could be based on an identifiable event or could be based on an automatic or periodic review.

In the example of the proposed regulation under the Clean Water Act, review is triggered by an identifiable event, such as a discharge. For emission sources covered by the draft generic standards, an identifiable event to trigger review of a plan is not readily apparent. These emission sources are spread out in an organic chemical plant and often require a measurement device for detection. A mechanism for triggering review other than the identifiable event mechanism would be necessary.

Another mechanism for triggering of review plans would follow procedures similar to those used under 40 CFR Part 51 for development of State Implementation Plans. These procedures would require automatic preparation of plans and their submittal to EPA for review. After a review to determine the effectiveness of a plan, the plan would be approved or disapproved. Approved plans would be incorporated into 40 CFR Part 61, thus assuring their implementation and allowing their enforcement. Incorporating plans into 40 CFR Part 61 would be very time consuming. The time and resources required to review and determine the effectivieness of a plan and then to incorporate the plan into 40 CFR Part 61 prohibit the use of this mechanism.

Review of a plan to determine its effectiveness is central to enforcement of the plan proparation approach. The use of an identifiable event to trigger review of a plan does not appear reasonable. The use of automatic review procedures similar to those used under 40 CFR Part 51 is prohibited by the time and resources required by the procedures. Thus, the plan preparation approach is limited in its usefulness.

EPA recognizes the general desirability of the performance level approach to generic standards. However, data and information are not available to develop these types of generic standards at the present time. Although EPA recognizes the possible use of the plan preparation approach, the time and resources required to establish effective plans prohibit the usefulness of this approach. Therefore, in developing draft generic standards, EPA has chosen the approach of specifying detailed work procedures as the most viable approach now available. This is consistent with EPA control techniques guidelines documents which recommend this approach. EPA invites public comment on advantages and disadvantages of each of the approaches discusesed above.

Draft Generic Standards

The draft generic standards are outlined in Attachment A to this notice. These draft standards would be proposed for sources of carcinogenic organic chemicals listed under section 112 of the Clean Air Act. When proposing generic standards for regulation of carcinogenic organic hazardous air pollutants, EPA would evaluate the appropriateness of each standard outlined in Attachment A. Tailoring may be required and therefore in some instances, additions to these draft standards may be made, and in other instances, deletions may be made.

To achieve the goal of expeditious control of carcinogenic emission sources, the draft generic standards were based on the following selection criteria. First, draft generic standards were selected which are broadly applicable to organic chemical emission sources. Second, standards were selected which lend themselves to quick implementation and third, standards were selected which do not require substantial capital expenditure. Finally, standards were selected which would be consistent with any additional standards promulgated later; thus, the generic standards could be instituted with confidence.

The draft generic standards categorize emission sources of organic chemicals into six groups. These groups are: fugitive emissions, chemical storage, chemical transfer and handling, waste disposal, process vents, and air pollution control devices. All of these emission sources lend themselves to control through the use of generic standards. In accordance with the selection criteria, the draft generic standards would require control of these emission sources, for the most part, through the use of improved operation, maintenance, and housekeeping practices.

The major focus of the draft generic standards is leak detection and repair. The draft standards would require inspection of potential fugitive emission sources at specific intervals to locate leaks which require repair. These fugitive emission sources consist of equipment which comes into contact

with any liquid or gaseous mixture containing more than a specified minimum concentration of the listed pollutant. Inspection includes routinely monitoring potential fugitive emission sources to detect gaseous leaks, and routinely observing sources to detect liquid leaks. If an organic chemical concentration greater than a defined action level is measured at the interface between the source and the atmosphere using a portable detection device, it is considered that a gaseous leak has been detected. Upon monitoring, if a gaseous leak is detected, the leak must be repaired within a specified repair interval. Upon observation, if a liquid leak is detected, the emission source is monitored. If a gaseous leak is detected, then repair is required within the specified repair interval. Repair of the leak would be confirmed by monitoring the source to determine that the concentration is less than the defined action level. Inspection intervals ranging from weekly to annually are currently being considered. Values of 1 to 10 percent for the minimum concentration in the mixture, 5 to 15 days for the repair interval, and 1,000 to 10,000 parts per million by volume measured as hexane (ppmv) as the action level or definition of a leak are also currently being considered.

If repair of a leak would result in more emissions than cumulative emissions from the leak prior to a scheduled process or operation shutdown, or if repair of a leak is not possible because of location, service, or unavoidable circumstances, the required repair could be delayed pending approval of EPA. EPA Regional Enforcement Divisions must be notifed by telegram or telephone within a specified number of days of requests for delay in the repair of a leak, and would retain the authority to disapprove any requests. If, however, EPA failed to respond within a specified number of days to a request for delay in repair of a leak, approval of the request would be granted automatically. Values of 2 to 5 days from the finding of a leak for requesting of a delay, and 2 to 5 days from receiving of a delay request for EPA response to the request, are being considered. Rather than follow this procedure for all leaks, EPA is considering this reporting procedure only for requests for delays in repair of excessive leaks. An excessive leak would be defined as some emission concentration greater than the current 1,000 to 10,000 ppmv range being considered as the definition of a leak. For example, an excessive leak could be defined as a concentration of equal to or greater than 100,000 ppm. Because either of these approaches is likely to require excessive resources and may be difficult to enforce, EPA is requesting comment on their feasibility and alternative approaches which could be employed.

The numerical values of the specific requirements in the draft generic standards were based on preliminary evaluation of various engineering studies. In most cases, the requirements are illustrated by a range of values that are being considered. The inspection intervals, which could vary from weekly to annually for equipment in liquid service and from monthly to quarterly for equipment in gaseous service, were based on data developed from test programs conducted within refinery and petrochemical plants. In general, the inspection intervals are based on the observed frequency of leaks and their expected emission rates. Preliminary evaluation of fugitive emission sources within benzene production units of petroleum refineries indicates that the inspection interval influences potential emission reduction more than other factors, such as definition of a leak, or repair interval. Currently, a monthly inspection interval for equipment in gaseous and liquid service appears the most reasonable inspection interval.

The repair interval which ranges from 5 to 15 days was based on observations in the petroleum refinery and petrochemical industry and on expected reporting requirements. In many cases, repairs could be made sooner than 5 days. However, there are unavoidable circumstances which can delay repair beyond 5 days. Circumstances, such as a plant's parts stock being depleted, are generally avoidable. While a plant normally stocks sufficient spare parts, there may be unique circumstances leading to the depletion of a plant's parts stock. Requests for delays in repair of leaks will be approved only where repair is likely to result in emissions in excess of the emissions resulting from the leak, or where repair is not possible because of circumstances which EPA considers unavoidable. Thus, the objective in selecting the repair interval was to select a time interval consistent with the ability of a plant to repair a leak expeditiously, but not to select a time interval so short that it requires plants to continually request repair delays for repair of routine leaks. Preliminary evaluation of fugitive emission sources within benzene production units of petroleum refineries indicates that the emission reduction gained by going from 15 to five days is small. Thus, the 15-day repair interval is currently considered reasonable.

The purpose of specifying a minimum concentration level of the pollutant in gaseous or liquid mixtures is to exclude process streams with trace quantities of the hazardous pollutant. The 10 percent upper boundary for this concentration level is based on analogy with the current vinyl chloride national emission standard. The lower boundary of 1 percent is based on estimates that this level, under certain conditions, would allow emissions of less than 10 ppmv of the hazardous air pollutant. Preliminary evaluation of fugitive emission sources within benzene production units of petroleum refineries indicates that the 10 percent minimum concentration level is most reasonable. Going from 10 percent to 1 percent would greatly increase the number of sources covered by the standards without a corresponding reduction in emissions. Therefore, 10 percent is currently considered the most reasonable minimum concentration level.

A hexane-based definition of a gaseous leak at 10,000 ppmv as defined in an EPA control techniques guideline document, "Control of Volatile Organic Compound Leaks from Petroleum Refinery Equipment" (EPA-450/2-78-036), was considered the maximum for use in regulating organic hazardous air pollutants. The 1000 ppmv definition of a leak is a simple reduction of the value in the control techniques guideline. The 1000 ppmv value appears a reasonable lower value because some leakage is unavoidable for emission sources covered by the draft generic standards. The 10,000 ppmv and 1000 ppmv concentrations would be measured at the interface between the leak and the atmosphere. These values are based on a technical evaluation of leaks and are not based on an evaluation of potential health risk of leaks. Preliminary evaluation of fugitive emission sources within benzene production units of petroleum refineries indicates that the 10,000 ppmv action level is more reasonable than the 1000 ppmv action level. Experience indicates that repair of leaks will result in emission reduction with an action level of 10,000 ppmv. However, experience does not indicate that repair of leaks with concentrations between 10,000 and 1000 ppmv will result in emission reduction. Therefore, 10,000 ppm is currently considered the most reasonable action level.

Miscellaneous Issues

Continuous area-wide monitoring to measure ambient concentrations of specific hazardous organic compounds was considered. EPA experience with the effectiveness of area-wide monitoring indicates that this technique

is not as effective in locating leaks as a seal-by-seal inspection, which is the technique outlined in the draft generic standards. The use of area-wide monitoring may add to the effectiveness of seal-by-seal inspection, but experience indicates that this added effectiveness in minimal. Also, area-wide monitoring is a capital intensive technique. Thus, continuous area-wide monitoring seems impractical for the draft generic standards.

On the other hand, some organic chemical facilities currently have leak detection and repair programs based on continuous area-wide monitoring of ambient air hydrocarbon concentrations. In some cases, these programs or other types of leak detection and repair programs might be as effective in reducing fugitive emissions as the program described in the draft generic standards. During meetings with industry associations, it has been suggested that an alternative to requiring duplication of equally effective leak detection and repair programs should be developed. This suggestion is reasonable. However, it depends upon determining equivalency of various programs with the draft generic standards. Three basic criteria seem necessary for any technique for determining equivalency. These criteria are: (1) the technique for determining equivalency should minimize both industry and Agency resource requirements; (2) the type of data necessary to demonstrate equivalency should normally be available or easily developed; and (3) the technique should be quantitative, with little room for discretion or argument concerning equivalency. EPA specifically invites comments on possible approaches to determining equivalency that meet these criteria.

The draft generic standards also include requirements for recordkeeping and reporting. Recordkeeping and reporting are considered necessary to insure that the improved operation, maintenance, and good housekeeping practices generally required by the draft generic standards are put into practice quickly, effectively, and consistently. Detected leaks would be recorded in a log and the corrective actions noted when a leak is repaired. EPA would be notified on a quarterly basis of leaks not repaired within the specified repair interval; these quarterly reports would include a listing of those units and components which leaked past the specified repair interval, date and duration of these leaks, and concentrations of the hazardous organic chemicals. In some cases, recordkeeping and reporting would be a duplication of other EPA requirements. Where duplication is unnecessary, duplication would not be required in the generic standards.

In early versions of the draft generic standards, recordkeeping and reporting requirements were the only measures used to ascertain compliance with the standards. In meetings with environmental groups, it was suggested that either EPA or a certified independent contractor perform scheduled inspections, observations and monitoring to confirm compliance with the standards. This suggestion would be extremely burdensome on EPA resources. Therefore, it has not been included in the draft generic standards. This suggestion, however, did lead to incorporation of an approach requiring the plant's owner or operator to notify EPA one week prior to the date of certain inspections, observations and monitoring. This would give EPA the opportunity to observe these activities and determine compliance with the generic standards, without requiring extensive resource commitments. EPA is actively seeking specific comments on this approach to enforcement of the draft generic standards, and specific comments on alternative approaches.

Minimal capital expenditure was a criterion for selection of the draft generic standards. The most readily identifiable capital expenditure required by the draft standards is the purchase of the portable organic vapor monitor. The cost of two such monitors used by EPA totals about $10,000. A preliminary estimate of annual leak detection and repair costs for benzene production units within a petroleum refinery is about $25,000 per year. This estimate includes the amortized cost of two monitors, annual operating cost of the monitors, annual cost of labor for leak detection, annual parts and labor cost for leak repair, and annual cost of administrative support. It does not, however, include cost savings, which could be significant, for the value of the retained organic chemicals. EPA is interested in specific information on the cost of the draft generic standards.

The draft standards would also require the owner or operator to submit to EPA within four months following the promulgation of a specific generic standard an estimate of emissions of the hazardous air pollutant. This estimate would be based on nameplate operating capacity and would be categorized by emission source.

Specific Requests

EPA is requesting comments on the approaches discussed under the implementation of Generic Standards section of this preamble. EPA is interested in comment on other approaches for implementing generic standards and is specifically interested in any data and information which could lead to the development of performance level generic standards and means for enforcing the plan preparation approach advocated by MCA.

EPA is also interested in specific comments on the following aspects of the draft generic standards: (1) identification of various operations, procedures and equipment that are sources of emissions of organic chemicals; (2) identification of demonstrated control techniques which can be broadly applied to these sources of emissions; (3) costs associated with the requirements listed in the draft generic standards; (4) standard equipment, designs, or operating and maintenance procedures (including periods of start-up and shutdown) for controlling emissions from operations that may emit organic chemicals; (5) comments on the various numerical ranges included in the draft generic standards; (6) comments on the approach of requiring requests for delays in repair of leaks or requests for delays in repair of excessive leaks only, and the specified levels of an excessive leak; (7) identification of techniques or procedures which could be used to determine the equivalency of alternative leak detection and repair programs; (8) identification of ways to reduce the burden of recordkeeping and reporting on the source and EPA while maintaining the effectiveness of the draft generic standards; (9) the enforcement approach of the draft generic standards and alternative approaches to the enforcement of these standards; and (10) specific information on leak detection and repair programs similar to the program in the draft generic standard; for each program, the information should include (a) chemical name and the process used to produce the chemical, (b) a detailed description of the leak detection and repair program, (c) the number of pieces of each type of equipment affected by the program, (d) separate costs for monitoring, equipment, installation of equipment, labor for monitoring, repair parts, labor for repair, and overhead, and (e) an estimate of the emission reduction potential and the product recovery credits, including an explanation of the estimation method.

This advance notice of proposed rulemaking is issued under the authority of sections 112, 114, and 301(a) of the

Clean Air Act as amended [42 U.S.C. 7412, 7414 and 7601(a)].

Dated: August 22, 1979.

Douglas M. Costle,

Administrator.

Attachment A—Draft Generic Standards

I. Applicability

Except as noted below, these standards would apply, for applicable emission sources, to the owner or operator of equipment affected by these standards. These standards would affect equipment which comes into contact with a liquid mixture containing 1 [10] percent or more by weight, or a gaseous mixture containing 1 [10] percent or more by volume, of organic chemicals listed by EPA as carcinogenic hazardous air pollutants under § 112 of the Clean Air Act.

Note.—Some requirements are illustrated with one end of the range of values currently being considered placed in brackets.

II. Fugitive Emissions

(A) All compressor seals and pipleline valves in gaseous service shall be monitored as provided in section IX (A) quarterly [monthly]. Whenever a concentration of 1,000 ppmv (parts per million by volume as hexane) [10,000 ppmv] is detected, a leak exists. Whenever a leak exists, it shall be repaired within 5 [15] days, except as provided in sections II (F) and (G).

(B) All pump seals, pipeline valves in liquid service, and process drains shall be monitored as provided in section IX (A) annually [monthly]. Whenever a concentration of 1,000 ppmv [10,000 ppmv] is detected, a leak exists. Whenever a leak exists, it shall be repaired within 5 [15] days, except as provided in sections II (F) and (G).

(C) Pressure relief valves, except those vented to a control device, shall be monitored as provided in section IX (A) quarterly [monthly]. Whenever a concentration of 1,000 ppmv [10,000 ppmv] is detected, a leak exists. Whenever a leak exists, it shall be repaired within 5 [15] days, except as provided in sections II (F) and (G).

(D) Whenever a rupture disk installed ahead of a pressure relief valve ruptures, it shall be replaced within 5 [15] days.

(E) Pump seals shall be observed for liquid leaks weekly as provided in section IX (B). Whenever liquids are observed running or dripping from a pump seal, the seal shall be monitored as provided in section IX (A). Whenever a concentration of 1,000 ppmv [10,000 ppmv] is detected, a leak exists. Whenever a leak exists, it shall be repaired within 5 [15] days, except as provided in sections II (F) and (G).

(F) When repair would clearly result in emissions in excess of the emissions resulting from the leak, repair may be delayed, as provided in section VIII (G), until a regularly scheduled shutdown. In determining whether emissions from repair of a leak would exceed those resulting from the leak, cumulative emissions over the time until the regularly scheduled shutdown shall be considered.

(G) Where repair is not possible because of location, service, or unavoidable circumstances, repair may be delayed, as provided in section VIII (G), until a time when repair is possible.

(H) Housekeeping practices.

(1) All liquid spills shall be cleaned up within 8 [24] hours. Acceptable cleanup methods include siphoning into a storage container (e.g., a portable spill tank), chemical absorption and other appropriate methods. Cleanup methods shall be in compliance with requirements under 40 CFR Part 151 (proposed).

(2) Wherever a valve is located at the end of a pipe or line, the pipe or line shall be sealed with a second valve, blind flange, plug or cap. This requirement does not apply to pressure relief valves.

(3) Whenever liquid or gaseous samples are taken from lines or equipment, a closeable container shall be used and sample valves shall be closed between samples. Liquid and gas that is bled from sample lines shall also be collected. All sample and bled material shall be returned to the process or disposed as provided in section V.

III. Chemical Storage

For storage equipment of greater than 40 [150] cubic meters capacity:

(A) All fixed-roof storage vessels exposed to direct sunlight shall be painted white. No more than 20 percent of the surface of the storage vessel, or 20 square meters, whichever is less, shall be covered with writing and figures. This requirement shall not apply to insulated, pressurized, or controlled temperature storage vessels and storage vessels equipped with a refrigerated condenser, carbon adsorber, incinerator, or any combination of these.

(B) Tank connection flanges and manway seals shall be monitored as provided in section IX (A) quarterly [monthly]. Whenever a concentration of 1,000 ppmv [10,000 ppmv] is detected, a leak exists. Whenever a leak exists, it shall be repaired within 5 [15] days, except as provided in sections II (F) and (G).

(C) Conservation vents on fixed roof storage vessels shall be inspected and, if necessary, maintained quarterly [monthly].

(D) Seals on floating roof storage vessels shall be inspected and, if necessary, maintained quarterly [monthly].

IV. Chemical Transfer and Handling

For equipment used in transferring and handling to or from rail cars, tank trucks, barges, and other transfer or transportation vehicles, all seals and fittings, excluding flanges, shall be monitored as provided in section IX (A) quarterly [monthly]. Whenever a concentration of 1000 ppmv [10,000 ppmv] is detected, a leak exists. Whenever a leak exists, it shall be repaired within 5 [15] days, except as provided in sections II (F) and (G).

V. Waste

(A) For waste covered by regulation under the Resource Conservation and Recovery Act (RCRA) and containing greater than 1 [10] percent by weight of a pollutant affected by section I, the following requirements would apply:

(1) Waste from sampling shall be disposed by returning it to the process stream, by reducing it in an appropriate air pollution control device, or by absorbing or adsorbing it with a liquid or solid. These absorbents and adsorbents, except those returned to the process stream, shall then be wastes.

(2) Waste shall be stored in vapor-tight containers.

(3) A Regional Administrator may require an owner/operator, who is demonstrating that treatment or disposal of a volatile waste (i.e., greater than 78 mm Hg) will not contribute airborne contaminant to the atmosphere, as provided in the NOTE in 40 CFR 250.45 (proposed), to demonstrate that treatment or disposal of the pollutant affected by section I will not contribute the airborne contaminant to the atmosphere such that concentrations above the source have the potential to increase risk to the public.

(B) For waste containing greater than 1 [10] percent by weight of a pollutant affected by section I and not covered by regulation under RCRA, the following requirements would apply:

(1) Disposal and treatment of waste shall be in compliance with standards for treatment/disposal, as provided in 40 CFR 250.45 (proposed).

(2) Disposal and treatment of waste shall be in compliance with sections V(A) (1), (2), and (3).

VI. Process Vents

Where a process vent may emit a hazardous organic chemical or any mixture containing 1 [10] percent or more by volume of hazardous chemicals, procedures describing process operation, including start-up, shutdown, normal and emergency procedures, shall be written and available to appropriate process operators. Operators shall receive an annual minimum of two hours of training in these procedures.

VII. Air Pollution Control Devices

Where a control device is used to reduce air pollutant emissions of a hazardous organic chemical, procedures outlining normal and emergency procedures for the control device shall be written and available to all operators. These procedures shall include at least all operating and maintenance procedures recommended by the control device manufacturer. Operators shall receive an annual minimum of two hours of training in these procedures.

VIII. Recordkeeping and Reports

(A) When a leak is detected, the presence of the leak shall be noted on a survey log as illustrated in Figure 1. Other information as shown shall be included on this survey log. Figure 1 is used to illustrate the minimum acceptable information to be recorded and is not a required form. A weatherproof and readily visible tag bearing an identification number and the date that the leak was detected shall be affixed to the leaking component. After the leak has been repaired, the remaining portion of the survey log shall be completed and the tag discarded. The survey log shall be retained for at least two years after the repair is completed.

(B) Quarterly reports shall be submitted to the appropriate EPA Regional Office, Enforcement Division Director. Each report shall include a list as shown in Figure 2 of all leaks that were located since the last report and not repaired within 5 [15] days. Each report shall include a separate list as shown

in Figure 2 of all leaks which were reported in a previous quarterly report and which have not been repaired. In addition, each report shall include a statement signed by the plant manager confirming that all weekly, [monthly], quarterly and annually inspecting, observing and monitoring has been performed.

(C) When a spill occurs, records of the date and the time of the spill and the cleanup shall be maintained for a minimum of two years. The records shall include an estimate of the quantity of the lost material, concentration of hazardous organic chemical, actions taken for the cleanup, and method of final disposal.

(D) When an owner or operator must comply with requirements in section VI, records of the times and approximate duration of all safety valve discharges shall be maintained for a minimum of two years. A summary of these safety valve discharges shall be reported annually to the appropriate EPA Regional Office, Enforcement Division Director.

(E) Written operating procedures as described in sections VI and VII shall be maintained and updated as necessary.

(F) Within four months of the date of promulgation of this section, the owner or operator of any facility subject to this section shall submit to the Administrator an evaluation of the emissions from the sources of the hazardous pollutant specified in this paragraph. This evaluation shall be an engineering estimate and shall be subject to the approval of the Administrator. The evaluation shall include as a basis the nameplate production rate, include the appropriate operating production rate, provide estimation of mass emissions from the sources in sections, II, III, IV, V, VI, and VII, and explain the technique for the estimation.

(G) A request for delay in repairing a leak must begin within two [five] days after locating the leak. The owner or operator making a delay request shall provide by telephone or telegram all necessary information for making an evaluation at the time of the initial request to the appropriate EPA Regional Office, Enforcement Division Director, and as required by the EPA Regional Office. In evaluating the request, the EPA Regional Office will consider the expected length of the delay, the reasons for the delay, the consequences of no delay, and other relevant factors. If the EPA Regional Office does not deny a requested delay within two [five] days after receipt of the request, the delay request will be granted automatically.

(H) Whenever an owner or operator is unable to comply with the two [five]-day requirement as provided in section VIII (G), he shall notify by telephone or telegram the appropriate EPA Regional Office, Enforcement Division Director, within one working day after determining the inability to comply. When notifying the appropriate EPA Regional Office, the owner or operator shall provide an explanation of the inability to comply with section VIII (G). In evaluating the inability to comply with section VIII (G), the EPA Regional Office shall consider the reasons for the inability to comply. After evaluation, the EPA Regional Office may allow application of section VIII (G) for delay requests after two [five] days after the plant locates a leak.

(I) At least one working week prior to each [monthly], quarterly, or annual inspections, observations, and monitoring, an owner or operator shall notify the appropriate EPA Regional Office, Enforcement Division Director, by telephone or telegram that such inspections, observations, or monitoring are scheduled.

IX. Test Methods

(A) Monitoring hazardous organic chemicals emissions.

This test method describes the procedures used to detect volatile organic chemical (VOC) leaks from sources of hazardous air pollutants. A portable test device is used to survey individual equipment leak sources. The specifications and performance criteria for the test instrument are included.

(1) Apparatus.

(a) Monitoring Instrument.

The VOC detection instrument used in this procedure may be of any type that is designed to respond to total hydrocarbons. The instrument must incorporate appropriate range options so that source levels can be measured. The instrument will be equipped with a pump so that a continuous sample is provided to the detector. The instrument meter readout will be such that the scale can be read to ±5 percent at 1,000 ppmv [10,000 ppmv]. The instrument must be capable of achieving the performance criteria given in Table 1. The definitions and evaluation procedures for each parameter are given in subcategory (3).

Table 1.—*Monitoring Instrument Performance Criteria*

Parameter	Specification
1. Zero drift (2-hour)	≤ 5 ppmv.
2. Calibration drift (2-hour)	≤ 5% of the calibration gas value.
3. Calibration error	≤ 5% of the calibration gas value.
4. Response time	≤ 5 seconds.

The instrument must be subjected to the performance evaluation test prior to being placed in service and every three months thereafter.

The performance evaluation test is also required after any modification or replacement of the instrument detector.

(b) Calibration Gases.

The VOC detection instrument is calibrated so that the meter readout is in terms of ppmv hexane. The calibration gases require for monitoring and instrument performance evaluation are a zero gas (air, <3 ppmv hexane) and a hexane in air mixture of about 1,000 ppmv [10,000 ppmv]. If cylinder calibration gas mixtures are used, they must be analyzed and certified by the manufacturer to be within ±2 percent accuracy. Calibration gases may be prepared by the user according to any accepted gaseous standards preparation procedure that will yield a mixture accurate to within ±2 percent. Alternative calibration gas species may be used in place of hexane if a relative response factor for each instrument is determined so that calibrations with the alternative species may be expressed as hexane equivalents on the meter readout.

(2) Procedures.

(a) Calibration.

Assemble and start up the VOC analyzer according to the manufacturer's instructions. After the appropriate warm-up period and zero or internal calibration procedure, introduce the 1,000 ppmv [10,000 ppmv] hexane or hexane equivalent calibration gas into the instrument sample probe. Adjust the instrument meter readout to correspond to the calibration gas value.

(b) Individual Source Surveys.

Place the instrument sample probe inlet at the surface of the component interface where leakage could occur. During sample collection, the probe should be moved along the interface surface with special emphasis placed on positioning the probe inlet at the local upwind and downwind side of the component interface. This general technique is applied to specific types of equipment leak sources as follows:

(i) Valves—The most common source of leaks from block (glove, plug, gate, ball, etc.) and control valves is at the seal between the stem and housing. The probe should placed at the interface where the stem exits the seal and sampling should be conducted on all sides of the stem. For valves where the housing is a multipart assembly, or where leaks can occur from points other than the stem seal, these sources should also be surveyed with the probe inlet moved along the surface of the interface.

(ii) Flanges and other connections—For welded flanges, the probe should be placed at the outer edge of the flange-gasket interface and samples collected around the circumference of the flange. For other types of non-permanent joints such as threaded connections, a similar traverse is conducted at the component interface.

(iii) Pumps and compressors—A circumferential traverse is conducted at the outer surface of the pump or compressor shaft and housing seal interface. In cases where the instrument probe cannot be placed in contact with a rotating shaft, the probe inlet must be placed within one centimeter of the shaft-seal interface. In those cases where the housing configuration of the pump or compressor prevents the complete traversing of the seal periphery, all accessible portions of the shaft seal should be probed. All other joints where leakage could occur will

also be sampled with the probe inlet placed at the surface interface. For pumps or compressors using sealing oil, the vent from the seal oil reservoir will be sampled by placing the probe inlet at approximately the centroid of the vent area to atmosphere.

(iv) Pressure relief devices—The physical configuration of most pressure relief devices prevents sampling at the sealing surface interface. However, most devices are equipped with an enclosed extension, or horn. For this type device, the probe inlet is placed at approximately the centroid of the exhaust area to atmosphere.

(v) Process drains—For open process drains, the sample probe inlet will be placed at approximately the centroid of the area open to the atmosphere. For covered drains, the probe should be placed at the surface of the cover interface and a circumferential traverse shall be conducted.

(3) Instrument performance evaluation procedures.

(a) Definitions.

Zero Drift—The change in the instrument meter readout over a stated period of time of normal continuous operation when the VOC concentration at the time of measurement is zero.

Calibration Drift—The change in the instrument meter readout over a stated period of time of normal continuous operation when the VOC concentration at the time of measurement is the same known upscale value.

Calibration Error—The difference between the VOC concentration indicated by the meter readout and the known concentration of a test gas mixture.

Response Time—The time interval from a step change in VOC concentration at the input of the sampling system to the time at which 95 percent of the corresponding final value is reached as displayed on the instrument readout meter.

(b) Evaluation Procedures.

At the beginning of the instrument performance evaluation test, assemble and start up the instrument according to the manufacturer's instructions for recommended warmup period and preliminary adjustments.

(i) Zero and calibration drift test—Calibrate the instrument per the manufacturer's instructions using zero gas and a calibration gas representing about 1,000 ppmv [10,000 ppmv]. Record the time, zero, and calibration gas readings (example data sheet shown in Figure 3). After 2 hours of continuous operation, introduce zero and calibration gases to the instrument. Record the zero and calibration gas meter readings. Repeat for three additional 2-hour periods.

(ii) Calibration error test—Make a total of nine measurements by alternately using zero gas and a calibration gas mixture corresponding to about 1,000 ppmv [10,000 ppmv]. Record the meter readings (example data sheet shown in Figure 4).

(iii) Response time test procedure—Introduce zero gas into the instrument sample probe. When the meter reading has stabilized, switch quickly to the 1,000 ppmv [10,000 ppmv] calibration gas. Measure the time from concentration switching to 95 percent of final stable reading. Perform this test sequence three (3) times and record the results (example data sheet given in Figure 5).

(iv) The calibration error test and the response time test may be performed during the zero and calibration drift test.

(c) Performance Calculations.

All results are expressed as mean values, calculated by:

$$\bar{x} = \frac{1}{n} \sum_{i=1}^{n} X_i$$

where:

X_i = value of the measurements

Σ = sum of the individual values

x = mean value (the absolute value of the mean value)

n = number of data points.

The specific calculations for each performance parameter are indicated on the respective example data sheet given in Figures 3, 4, and 5. The example data sheets are constructed so that performance criteria tests can be conducted on 1,000 ppmv [10,000 ppmv] levels of gas.

(B) Observing for liquid leaks of hazardous organic chemicals.

This test method describes the procedures used to detect organic chemical liquid leaks from sources of hazardous air pollutants. The method uses visual observations to determine the existence of a liquid leak.

(1) Apparatus.

No apparatus is needed to perform this method.

(2) Procedure.

Observing from vantage points to sufficiently inspect the source, determine if any chemicals are leaking. A liquid leak exists if any chemical liquid is observed running or dripping from the surface of the source. When a chemical liquid is dripping to a surface which is in the vicinity of a possible hazardous pollutant emission source, locate the source of the liquid.

BILLING CODE 6560-01-M

Leak Detection and Repair Survey Log

Instrument Operator:_____

Recorder:_____

TAG NUMBER	UNIT	COMPONENT	HAZARDOUS ORGANIC CHEMICAL CONCENTRATION IN STREAM	DATE LEAK LOCATED	DATE MAINTEN-ANCE PERFORMED	COMPONENT RECHECK AFTER MAINTENANCE	
						DATE	INSTRUMENT READING (PPM)
			DRAFT				

FIGURE 1. Example Monitoring Survey Log Sheet.

TAG NUMBER	UNIT	COMPONENT	HAZARDOUS ORGANIC CHEMICAL CONCENTRATION IN STREAM	DATE LEAK LOCATED	DATE MAINTEN-ANCE PERFORMED	DATES MAINTEN-ANCE ATTEMPTED	REASONS REPAIRS POST-PONED OR FAILED
			DRAFT				

FIGURE 2. Example Leak Report.

Instrument ID: _____ Calibration Gas Data: _____ ppmv

Date and Time	Zero Reading ppmv	Zero Drift ppmv	Calibration Gas Reading ppmv	Calibration Drift ppmv
Start				
1.				
2.				
3.				
4.				

DRAFT

Mean (1) Value: Zero Drift = _____ ppmv

$$\text{Calibration Drift} = \frac{\text{mean calibration drift}}{\text{calibration gas value}} \times 100 = _____\%$$

(1) Absolute Value

Figure 3. Zero and Calibration Drift Determination

Instrument ID _____

Calibration Gas Mixture Data

_____ ppmv

Run No.	Calibration Gas Concentration, ppmv	Instrument Meter Reading, ppmv	Difference,(1) ppmv
1.			
2.			
3.			
4.			
5.			
6.			
7.			
8.			
9.			

DRAFT

Mean Difference(2) _____

$$\text{Calibration Error} = \frac{\text{Mean Difference}^{(2)}}{\text{Calibration Gas Concentration}} = _____$$

(1) (Calibration Gas Concentration - Instrument Reading)
(2) Absolute Value

Figure 4. Calibration Error Determination

Instrument ID _____

Calibration Gas Concentration _____ ppmv

95% Response Time:

1. _____ Seconds
2. _____ Seconds
3. _____ Seconds

DRAFT

Mean Response Time _____ Seconds

Figure 5. Response Time Determination

[FR Doc. 79-31303 Filed 10-9-79; 8:45 am]
BILLING CODE 6560-01-C

Reader Aids

Federal Register
Vol. 44, No. 197
Wednesday, October 10, 1979

INFORMATION AND ASSISTANCE

Questions and requests for specific information may be directed to the following numbers. General inquiries may be made by dialing 202-523-5240.

Federal Register, Daily Issue:

202-783-3238	Subscription orders (GPO)
202-275-3054	Subscription problems (GPO)
	"Dial-a-Reg" (recorded summary of highlighted documents appearing in next day's issue):
202-523-5022	Washington, D.C.
312-663-0884	Chicago, Ill.
213-688-6694	Los Angeles, Calif.
202-523-3187	Scheduling of documents for publication
523-5240	Photo copies of documents appearing in the Federal Register
523-5237	Corrections
523-5215	Public Inspection Desk
523-5227	Finding Aids
523-5235	Public Briefings: "How To Use the Federal Register."

Code of Federal Regulations (CFR):

523-3419	
523-3517	
523-5227	Finding Aids

Presidential Documents:

523-5233	Executive Orders and Proclamations
523-5235	Public Papers of the Presidents, and Weekly Compilation of Presidential Documents

Public Laws:

523-5266 -5282	Public Law Numbers and Dates, Slip Laws, U.S. Statutes at Large, and Index
275-3030	Slip Law Orders (GPO)

Other Publications and Services:

523-5239	TTY for the Deaf
523-5230	U.S. Government Manual
523-3408	Automation
523-4534	Special Projects
523-3517	Privacy Act Compilation

FEDERAL REGISTER PAGES AND DATES, OCTOBER

56305-56662 1
56663-56918 2
56919-57064 3
57065-57378 4
57379-57906 5
57907-58492 9
58493-58670 10

CFR PARTS AFFECTED DURING OCTOBER

At the end of each month, the Office of the Federal Register publishes separately a list of CFR Sections Affected (LSA), which lists parts and sections affected by documents published since the revision date of each title.

3 CFR

Executive Orders:
10893 (Revoked by EO 12163) 56673
10900 (Amended by EO 12163) 56673
10973 (Revoked by EO 12163) 56673
11223 (Amended by EO 12163) 56673
11269 (Amended by EO 12164) 56681
11579 (Amended by EO 12163) 56673
11846 (Amended by EO 12163) 56673
11958 (Amended by EO 12163) 56673
12065 (Amended by EO 12163) 56673
12092 (Amended by EO 12161) 56663
12140 (Amended by EO 12162) 56665
12161 56663
12162 56665
12163 56673
12164 56681

Proclamations:
4693 56669
4694 56671
4695 58493

Administrative Orders:

Memorandums:
October 18, 1961 (Amended by EO 12163) 56673

Presidential Determination:
No. 79-17 of September 28, 1979 56667

5 CFR

340 57379
353 56683
890 57379

6 CFR

705 56900
706 56910

7 CFR

2 ..... 57907, 58495
15a 57907
16 56919
29 57907
906 57909
908 57065
910 57383
929 56683
932 58495
979 56684
982 57065
1139 57066
1421 ..... 56305, 57383
1464 57909
1822 56919
1861 56920
1942 56684
1951 56306
1980 56920

Proposed Rules:
6 56943
20 57931
27 57932
272 57414
273 57414
318 57415
725 57932
729 57416
981 57417
1065 57103

8 CFR

100 56311

Proposed Rules:
103 56368

9 CFR

78 57384

10 CFR

50 ..... 57911, 57912
51 56312
211 ..... 56888, 57067
212 57069
476 57370
570 56921

Proposed Rules:
211 56369
214 57103
220 56369
375 56953
376 56953

12 CFR

Ch. VII 56691
201 57385
202 57070
207 56922
220 56922
221 56922
224 56922
226 56312
263 56685
265 56313
346 57385
545 57386
704 58496
742 57071

Proposed Rules:
Ch. V 57419

13 CFR
121 ... 57914

14 CFR
39 ... 56315-56322, 57072, 57073
71 ... 56322, 56323, 57075-57080, 57083, 57084, 57915-57917
73 ... 57080-57082
75 ... 57082-57084
97 ... 57918
207 ... 58499
208 ... 58499
212 ... 57386, 58500
214 ... 57387, 58500
221a ... 57085
241 ... 58500
287 ... 57085
1214 ... 56923
Proposed Rules:
Ch. I ... 56369
Ch. V ... 56377
11 ... 56370
21 ... 56370
37 ... 56370
39 ... 57105
71 ... 56373-56376, 57106, 57934-57938
93 ... 56376

16 CFR
13 ... 56323, 56923, 57920
1700 ... 57920
Proposed Rules:
Ch. II ... 57352
13 ... 58516, 58518

17 CFR
210 ... 57030, 57037
211 ... 57038
231 ... 56924
240 ... 57387
241 ... 56924
249 ... 57374, 57387
270 ... 58502
Proposed Rules:
240 ... 56953
270 ... 58521

18 CFR
2 ... 56926
154 ... 57726
201 ... 57726
204 ... 57726
271 ... 56926
282 ... 57726, 57754, 57778
Proposed Rules:
282 ... 57783, 57786, 57788
292 ... 57107

19 CFR
4 ... 57086, 57087
101 ... 57088
Proposed Rules:
134 ... 58527
155 ... 57044
159 ... 57044
177 ... 56715

20 CFR
404 ... 56691
675 ... 56866
680 ... 56866
Proposed Rules:
615 ... 56715

21 CFR
109 ... 57389
510 ... 57389
558 ... 57389
1316 ... 56324
Proposed Rules:
166 ... 57422
890 ... 57939, 57940
1020 ... 57423

22 CFR
Proposed Rules:
216 ... 56378

24 CFR
Ch. XIII ... 58507
42 ... 56324
203 ... 57089
205 ... 57090
207 ... 57090
213 ... 56927, 57089, 57090
220 ... 57090
221 ... 57090
232 ... 57090
234 ... 57089
235 ... 57090
236 ... 57090
240 ... 58503
241 ... 57090
242 ... 57090
244 ... 57090
250 ... 57090
290 ... 56608
403 ... 58503
510 ... 58506
570 ... 56325
841 ... 57922
888 ... 57925
Proposed Rules:
203 ... 58527
888 ... 58528

25 CFR
31a ... 58096
31b ... 58101

26 CFR
1 ... 57390, 57925
7 ... 57390
Proposed Rules:
Ch. I ... 56502
1 ... 57423, 57427
31 ... 57940
301 ... 56715

27 CFR
9 ... 56692
201 ... 56326

28 CFR
0 ... 57926, 58507
2 ... 58507
50 ... 57926
Proposed Rules:
2 ... 58528

29 CFR
14 ... 57397
1604 ... 58073
2703 ... 57348

30 CFR
Ch. VII ... 57927

32 CFR
51 ... 56328
231 ... 56328
706 ... 56929, 57400
901 ... 56930

33 CFR
127 ... 57092, 57927
147 ... 57927
165 ... 57928, 57929

35 CFR
133 ... 56916
253 ... 56693
Proposed Rules:
133 ... 57941

36 CFR
50 ... 56934
1228 ... 58088
Proposed Rules:
Ch. IX ... 56954, 58528

38 CFR
36 ... 56329, 58508

39 CFR
111 ... 58509

40 CFR
52 ... 56694, 57401
65 ... 56696
81 ... 57929
231 ... 58076
413 ... 56330
600 ... 57358
Proposed Rules:
40 ... 56955
50 ... 56730
51 ... 56957, 57107
52 ... 56716, 56717, 56721, 56957, 57107, 57109, 57117, 57118, 57427, 57942
55 ... 56721
60 ... 57792, 58602
61 ... 58642, 58661
62 ... 57118, 57948
81 ... 57942
120 ... 57428
122 ... 56957
162 ... 57429
250 ... 56724
600 ... 57362
707 ... 56856

41 CFR
Ch. 101 ... 56699
Proposed Rules:
Ch. 25 ... 56387
9 ... 57119
9-7 ... 57119
109 ... 57121
109-60 ... 57121

42 CFR
57 ... 56937
456 ... 56333

43 CFR
221 ... 56339
2880 ... 58126
3400 ... 56339
3410 ... 56339
3420 ... 56339
3422 ... 56339
3430 ... 56339
3440 ... 56339
3450 ... 56339
3460 ... 56339
3470 ... 56339
3500 ... 56339
3501 ... 56339
3502 ... 56339
3503 ... 56339
3504 ... 56339
3507 ... 56339
3511 ... 56339
3520 ... 56339
3521 ... 56339
3524 ... 56339
3525 ... 56339
3526 ... 56339
3550 ... 56339
3564 ... 56339
3565 ... 56339
3566 ... 56339
3568 ... 56339
Proposed Rules:
4 ... 57948
1780 ... 56622
2800 ... 58106
3100 ... 58638

44 CFR
64 ... 56354, 57092, 57093
65 ... 57094
67 ... 56366, 56701
Proposed Rules:
67 ... 56957, 57429-57432

45 CFR
Ch. I ... 56938
80 ... 58509
304 ... 56939
1010 ... 56548
1012 ... 56548
1050 ... 56548
1060 ... 56548
1061 ... 56548
1062 ... 56548
1063 ... 56548
1064 ... 56548
1067 ... 56548
1068 ... 56548
1069 ... 56548
1070 ... 56548
1075 ... 56548
1076 ... 56548
Proposed Rules:
Ch. VI ... 56387
Ch. XI ... 56389
234 ... 56389
236 ... 56389
617 ... 57127
1152 ... 56725
1172 ... 57130

46 CFR
503 ... 57411
Proposed Rules:
66 ... 57137

47 CFR
0 ... 57096

18 56699
61 57096
73 57097
90 57098
Proposed Rules:
0 57636
73 ..... 57138, 57636

49 CFR

192 57100
213 56342
571 57100
801 ..... 56340, 57930
1011 58511
1033 ..... 56343, 56939
1100 58511
1307 57413
1310 57413
1322 57930
Proposed Rules:
Ch. X 57139
195 57952
575 56389

50 CFR

17 56862
32 ..... 56940, 56941
216 57100
611 57101
652 56941
653 ..... 56700, 56701
Proposed Rules:
17 56618
285 57140

AGENCY PUBLICATION ON ASSIGNED DAYS OF THE WEEK

The following agencies have agreed to publish all documents on two assigned days of the week (Monday/Thursday or Tuesday/Friday).

This is a voluntary program. (See OFR NOTICE FR 32914, August 6, 1976.)

Monday	Tuesday	Wednesday	Thursday	Friday
DOT/SECRETARY*	USDA/ASCS		DOT/SECRETARY*	USDA/ASCS
DOT/COAST GUARD	USDA/APHIS		DOT/COAST GUARD	USDA/APHIS
DOT/FAA	USDA/FNS		DOT/FAA	USDA/FNS
DOT/FHWA	USDA/FSQS		DOT/FHWA	USDA/FSQS
DOT/FRA	USDA/REA		DOT/FRA	USDA/REA
DOT/NHTSA	MSPB/OPM		DOT/NHTSA	MSPB/OPM
DOT/RSPA	LABOR		DOT/RSPA	LABOR
DOT/SLSDC	HEW/FDA		DOT/SLSDC	HEW/FDA
DOT/UMTA			DOT/UMTA	
CSA			CSA	

Documents normally scheduled for publication on a day that will be a Federal holiday will be published the next work day following the holiday.

Comments on this program are still invited. Comments should be submitted to the Day-of-the-Week Program Coordinator, Office of the Federal Register, National Archives and Records Service, General Services Administration, Washington, D.C. 20408

***NOTE: As of July 2, 1979, all agencies in the Department of Transportation, will publish on the Monday/Thursday schedule.**

REMINDERS

The items in this list were editorially compiled as an aid to **Federal Register** users. Inclusion or exclusion from this list has no legal significance. Since this list is intended as a reminder, it does not include effective dates that occur within 14 days of publication.

Rules Going Into Effect Today

TRANSPORTATION DEPARTMENT

Coast Guard—

53352 9-13-79 / Engineering equipment; Design and approval requirements for oil pollution prevention equipment

Next Week's Deadlines for Comments On Proposed Rules

AGRICULTURE DEPARTMENT

Agricultural Stabilization and Conservation Service—

47543 8-14-79 / 1980 Extra Long Staple Cotton Program; proposed determinations regarding national marketing quota, national acreage allotment, and related operating provisions; comments by 10-15-79

Animal and Plant Health Inspection Service—

54518 9-20-79 / Quarantine; Hawaiian fruits and vegetables; comments by 10-20-79

Commodity Credit Corporation—

47544 8-14-79 / Cotton; proposed determinations regarding 1980-Crop Loan and Payment Programs; comments by 10-15-79

Federal Crop Insurance Corporation—

47944 8-16-79 / Corn Crop Insurance; comments by 10-15-79

Rural Electrification Administration—

54719 9-21-79 / Proposed revision of REA Bulletin 181-3, accounting interpretations for rural electric borrowers; comments by 10-19-79

CIVIL AERONAUTICS BOARD

55018 9-24-79 / Data requirements for applications for passenger route authority filed with the board and by commuter carriers serving an eligible point; comment period extended to 10-15-79

[Originally published at 44 FR 44106, July 26, 1979]

44106 7-26-79 / Passenger route authority filed with the board and by commuter carriers serving an eligible point; reply comments by 10-15-79

COMMERCE DEPARTMENT

Maritime Administration—

54734 9-21-79 / Conservative dividend policy, amendment of standard for dividend declarations; comments extended to 10-17-79

[Originally published at 44 FR 41854, July 18, 1979]

National Oceanic and Atmospheric Administration—

47862 8-15-79 / Endangered and threatened wildlife and plants; comments by 10-15-79

52284 9-7-79 / Groundfish of the Gulf of Alaska Fishery Management Plan; comments by 10-20-79

COMMUNITY SERVICES ADMINISTRATION

47961 8-16-79 / Establishment and eligibility of Community Action Program; comments by 10-15-79

CONSUMER PRODUCT SAFETY COMMISSION

53676 9-14-79 / Omnidirectional Citizens Band base station antennas; comments by 10-15-79

DEFENSE DEPARTMENT

Corps of Engineers—

53179 9-13-79 / Navigation regulations; Cape Cod Canal, Mass.; comments by 10-15-79

ENERGY DEPARTMENT

Bonneville Power Administration—

55921 9-28-79 / Fairview-Bandon No. 2230-KV Line; comments by 10-19-79

Economic Regulatory Administration—

56369 10-1-79 / Distribution of strategic petroleum reserve crude oil; comments by 10-20-79

Federal Energy Regulatory Commission—

52253 9-7-79 / High cost natural gas produced from tight formations; comments by 10-15-79

ENVIRONMENTAL PROTECTION AGENCY

54070 9-18-79 / Approval of Missouri air quality implementation plan; comments by 10-18-79

44054 7-26-79 / Good laboratory practice standards for health effects; comments by 10-16-79

54323 9-19-79 / Hazardous waste guidelines and regulations; change in statistical test; comments by 10-19-79

44054 7-26-79 / Health effects test standards for Toxic Substances Control Act; comments by 10-16-79

53183 9-13-79 / Proposed tolerances for the pesticide chemical chlorpyrifos; comments by 10-15-79

FARM CREDIT ADMINISTRATION

53534 9-14-79 / Loan policies and operations; comments by 10-15-79

FEDERAL COMMUNICATIONS COMMISSION

50379 8-28-79 / FM broadcast station in Bentonville, Ark.; changes in table of assignments; comments by 10-15-79

50378 8-28-79 / FM broadcast stations in Manhattan, Kans.; changes in table of assignments; comments by 10-15-79

44196 7-27-79 / Inquiry into economic relationship between television broadcasting and cable television; reply comments by 10-17-79

50866 8-30-79 / MTS and WATS market structure; comments by 10-15-79

48997 8-21-79 / Proposing to add Florence, Alabama, to the Huntsville-Decatur television market; comments by 10-15-79

26772 5-7-79 / Provisions for noncommercial educational FM broadcast stations; comment period extended to 10-15-79

[Originally published at 43 FR 27682, June 7, 1978]

47359 8-13-79 / Revision of uniform system of accounts; reply comments by 10-15-79

45653 8-3-79 / West Union, Ohio; changes in FM table of assignments; reply comments by 10-15-79

FEDERAL ELECTION COMMISSION

53929 9-17-79 / Freedon of Information Act implementation; comments by 10-17-79

FEDERAL MARITIME COMMISSION

53547 9-14-79 / Financial reports by common carriers by water in the Domestic Offshore Trades; comments by 10-15-79

FEDERAL RESERVE SYSTEM

47775 8-15-79 / Credit by Brokers and Dealers; Credit to Exchange Specialists; comments by 10-15-79

47776 8-15-79 / Credit by Brokers and Dealers; Loan value for Mutual Fund Shares; comments by 10-15-79

45141 8-1-79 / Truth in lending; calculation and disclosure of annual percentage rates; comments by 10-15-79

54291 9-19-79 / Truth in Lending disclosures for transactions involving required deposit balances; comments by 10-19-79

[Originally published at 44 FR 46438, Aug. 8, 1979]

FEDERAL TRADE COMMISSION

51826 9-5-79 / Games of chance in the food retailing and gasoline industries; comments by 10-15-79

35237 6-19-79 / Petition to issue rule declaring oil company ownership of petroleum pipelines to be an unfair method of competition; comments by 10-18-79

HEALTH, EDUCATION, AND WELFARE DEPARTMENT

Food and Drug Administration—

44177 7-27-79 / Ammoniated glycyrrhizin; affirmation of GRAS status as direct human food ingredient; comments by 10-15-79

[Originally published at 44 FR 28334, May 15, 1979]

47548 8-14-79 / Certification of antibiotics and insulin; financial responsibility of agents; comments by 10-15-79

48265 8-17-79 / Identity standards for ice cream, frozen custard, ice milk and sherbet; comments by 10-16-79

53539 9-14-79 / Safety and effectiveness data supporting the approval of minor use new animal drugs; comments by 10-19-79

HOUSING AND URBAN DEVELOPMENT DEPARTMENT

Assistant Secretary for Housing, Federal Housing Commissioner—

47549 8-14-79 / Mutual mortgage insurance and insured home improvement loans; mortgage financing changes; comments by 10-15-79

INTERIOR DEPARTMENT

Fish and Wildlife Service—

47862 8-15-79 / Endangered and Threatened Wildlife and Plants; comments by 10-15-79

INTERSTATE COMMERCE COMMISSION

48304 8-17-79 / Return haul applications for movement of exempt agricultural commodities; comments by 10-16-79

54324 9-19-79 / Standards for determining rail services continuation subsidies; comments by 10-15-79

LABOR DEPARTMENT

Mine Safety and Health Administration—

47746 8-14-79 / Independent contractors; identification as operators; comments by 10-15-79

Occupational Safety and Health Administration—

48274 8-17-79 / Educational scientific diving; comments by 10-15-79

LIBRARY OF CONGRESS

Copyright Office—

47550 8-14-79 / Filing of statements of certain types of author information; reply comments by 10-15-79

NAVAJO AND HOPI INDIAN RELOCATION COMMISSION

53760 9-17-79 / Revision of Commission hearings procedures; comments by 10-17-79

NUCLEAR REGULATORY COMMISSION

48234 8-17-79 / Radioactive material packaging, environmental statement on transportation; comments by 10-16-79

PERSONNEL MANAGEMENT OFFICE

47543 8-14-79 / Local elections in Stafford County, Va.; political participation by U.S. Government employees; comments by 10-15-79

54067 9-18-79 / Temporary assignment of employees between executive agencies and States; comments by 10-18-79

TRADE NEGOTIATIONS, OFFICE OF SPECIAL REPRESENTATIVE

53535 9-14-79 / Procedures for complaints received; comments by 10-14-79

TRANSPORTATION DEPARTMENT

Coast Guard—

51620 9-4-79 / Amendment of Navigation Safety regulations applying to vessels on the Great Lakes; comments by 10-17-79

51614 9-4-79 / Revision of the anchorage regulations for Los Angeles and Long Beach Harbors, California; comments by 10-15-79

Federal Railroad Administration—

51128 8-30-79 / Assistance to States for local rail service; comments by 10-15-79

Materials Transportation Bureau—

43858 7-26-79 / Hazardous Materials Identification Numbers; comments by 10-18-79

47966 8-16-79 / Requirements for transportation of radioactive materials; comments by 10-16-79

Office of the Secretary—

51141 8-30-79 / Common Carrier data reporting requirements; comments by 10-15-79

TREASURY DEPARTMENT

Customs Service—

48709 8-20-79 / Revision of customs regulations relating to public disclosure of information; comments by 10-19-79

Fiscal Service—

53090 9-12-79 / Indorsement and payment of checks drawn on the U.S. Treasury; forms of endorsement; comments by 10-15-79

49478 8-23-79 / Regulations governing book-entry treasury bills; comments by 10-19-79

Internal Revenue Service—

54315 9-19-79 / Income tax; short-term corporate obligations and certificates of deposit and similar deposit arrangements; comments by 10-19-79

48269 8-17-79 / One-half percent TRASOP credit; comments by 10-15-79

47958 8-16-79 / Taxes on excess business holdings; comments by 10-15-79

WAGE AND PRICE STABILITY COUNCIL

56900 10-2-79 / Anti-inflationary pay and price standards; interim final standards for the second program year; comments by 10-17-79

56910 10-2-79 / Procedural rules; interim final rules for the second year program; comments by 10-17-79

Next Week's Meetings

ARTS AND HUMANITIES, NATIONAL FOUNDATION

55252 9-25-79 / Design Arts Panel, Washington, D.C. (open), 10-19-79

56062 9-28-79 / Humanities Panel; Washington, D.C. (closed), 10-15-79

56408 10-1-79 / Humanities Panel, Washington, D.C. (closed), 10-16 and 10-19-79

53592 9-14-79 / Humanities Panel, Washington, D.C. (closed), 10-19 and 10-20-79

53114 9-12-79 / Partnership Coordination Advisory Panel, Washington, D.C. (open), 10-16 and 10-17-79

55252 9-25-79 / Visual Arts Panel, Washington, D.C. (open), 10-16 and 10-17-79

CIVIL RIGHTS COMMISSION

55222 9-25-79 / Kentucky Advisory Committee, Louisville, Ky. (open), 10-16-79

54081 9-18-79 / Massachusetts Advisory Committee, Boston, Mass. (open), 10-17-79

54081 9-18-79 / North Carolina Advisory Committee, Atlanta, Ga. (open), 10-19-79

55407 9-26-79 / Rhode Island Advisory Committee, Providence, R.I. (open), 10-16-79

54531 9-20-79 / Vermont Advisory Committee, Montpelier, Vt. (open), 10-18-79

[Rescheduled at 44 FR 55408, Sept. 26, 1979]

COMMERCE DEPARTMENT

Census Bureau—

55918 9-28-79 / Census Advisory Committee of the American Economic Association, Suitland, Md. (open), 10-19-79

Industry and Trade Administration—

53272 9-13-79 / Exporters' Textile Advisory Committee, Washington, D.C. (open), 10-17-79

National Oceanic and Atmospheric Administration—

56392 10-1-79 / Western Pacific Fishery Management Council, Pago Pago, American Samoa, (open), 10-15 and 10-16-79

DEFENSE DEPARTMENT

Air Force Department—

55222 9-25-79 / Scientific Advisory Board, Washington, D.C. (closed), 10-15-79

54084 9-18-79 / Scientific Advisory Board, Washington, D.C. (closed), 10-18 and 10-19-79

53282 9-13-79 / USAF Scientific Advisory Board, Andrews Air Force Base, Md. (closed), 10-16 and 10-17-79

Army Department—

55920 9-28-79 / U.S. Army Medical Research and Development Advisory Panel Ad Hoc Study Group on Viral & Rickehsial Diseases, Washington, D.C. (partially open), 10-16 and 10-17-79

Office of the Secretary—

55413 9-26-79 / DOD Advisory Group on Electron Devices, New York, N.Y. (closed), 10-17-79

49009 8-21-79 / Wage Committee, Washington, D.C. (closed), 10-16-79

ENVIRONMENTAL PROTECTION AGENCY

44054 7-26-79 / Health effects test standards for Toxic Substances Control Act; Melrose Park, Ill. (open), 10-15 and 10-16-79

52881 9-11-79 / Science Advisory Board Executive Committee, Toxic Substances Subcommittee, Washington, D.C. (open), 10-19-79

FEDERAL COMMUNICATIONS COMMISSION

56739 10-2-79 / Radio Technical Commission for Marine Services Executive Committee, Washington, D.C. (open), 10-18-79

FEDERAL PREVAILING RATE ADVISORY COMMITTEE

53570 9-14-79 / Open Committee, Washington, D.C. (open), 10-18-79

GOVERNMENT PRINTING OFFICE

50920 8-30-79 / Depository Library Council to the Public Printer, Washington, D.C. (open), 10-15 through 10-17-79

HEALTH, EDUCATION, AND WELFARE DEPARTMENT

Alcohol, Drug Abuse and Mental Health Administration—

54121 9-18-79 / Alcohol Biomedical Research Review Committee, Bethesda, Md. (open and closed), 10-17 through 10-19-79

54122 9-18-79 / Alcohol Psychosocial Research Review Committee, Bethesda, Md. (open and closed), 10-17 through 10-19-79

54122 9-18-79 / Basic Psychopharmacology and Neuropsychology Research Review Committee, Silver Spring, Md. (open and closed), 10-18 and 10-19-79

54122 9-18-79 / Community Processes and Social Policy Review Committee, Washington, D.C. (open and closed), 10-18 through 10-20-79

56026 9-28-79 / Interagency Committee on Federal Activities, Washington, D.C. (open), 10-16-79

57221 10-4-79 / Minority Advisory Committee, Albuquerque, N. Mex., 10-18 and 10-19-79

54122 9-18-79 / Paraprofessional Education Review Committee, Rockville, Md. (open), 10-19-79

Education Office—

57224 10-4-79 / Bilingual Education National Advisory Council, Washington, D.C. (partially open), 10-14 through 10-16-79

50660 8-29-79 / Education of Disadvantaged Children, National Advisory Council, Washington, D.C. (open), 10-19 and 10-20-79

[Rescheduled at 44 FR 52889, Sept. 11, 1979]

Food and Drug Administration—

53572 9-14-79 / Clinical Chemistry Devices Section of Clinical Chemistry and Hematology Devices Panel, Silver Spring, Md. (open) 10-15-79

53573 9-14-79 / Clinical Toxicology Devices Section of the Clinical Chemistry and Hematology Devices Panel, Washington, D.C. (open), 10-19-79

56028 9-28-79 / Consumer Participation, Baltimore, Md. 10-18-79

52338 9-7-79 / Gastrointestinal Drugs Advisory Committee, Rockville, Md. (open), 10-15 and 10-16-79

53573 9-14-79 / General and Plastic Surgery Devices Section of the Surgical and Rehabilitation Devices Panel, Washington, D.C. (open), 10-18-79

53572 9-14-79 / Ophthalmic Devises Section of the Ophthalmic; Ear, Nose, Throat; and Dental Devices Panel (open and closed), 10-15 and 10-16-79

53572 9-14-79 / Orthopedic Devices Section of the Surgical and Rehabilitation Devices Panel (open and closed), 10-15 and 10-16-19

Health Resources Administration—

55064 9-24-79 / Graduate Medical Education National Advisory Committee, Hyattsville, Md. (open), 10-15 and 10-16-79

Health Services Administration—

54551 9-20-79 / National Advisory Council on Migrant Health, Rockville, Md. (open), 10-15 through 10-18-79

National Institutes of Health—

53107 9-12-79 / Allergy and Infectious Diseases, Bethesda, Md. (open), 10-15-79

50657 8-29-79 / Blood Diseases and Resources Advisory Committee, Bethesda, Md. (open), 10-15 and 10-16-79

55422 9-26-79 / Board of Scientific Counselors, Bethesda, Md. (partially open), 10-19 and 10-20-79

53802 9-17-79 / Board of Scientific Counselors, Division of Cancer Biology and Diagnosis, Bethesda, Md. (closed), 10-16 and 10-17-79

49307 8-22-79 / Division of Research Services, Silver Spring, Md. (open), 10-17 and 10-18-79

53107 9-12-79 / Neurological Disorders Program, Project Review A Committee, Bethesda, Md. (partially open), 10-18 through 10-20-79

52938 9-6-79 / President's Cancer Panel, Bethesda, Md. (open), 10-15-79

53890 9-17-79 / Six research grant study sections, Bethesda and Chevy Chase, Md. (partially open), 10-15 to 10-20-79 inclusive

INTERIOR DEPARTMENT

Land Management Bureau—

56407 10-1-79 / Alabama: Federal Regional Coal Team Briefing, Tuscaloosa, Al., 10-16-79

55068 9-24-79 / Discussion of intent to apply coal unsuitability criteria in the Alton, Kaiparowits, and Eastern Fields, Utah; Kanab, Utah (open), 10-17-79

National Park Service—

55068 9-24-79 / Cape Cod National Seashore Advisory Commission; South Wellfleet, Mass. (open), 10-19-79

56992 10-3-79 / Indiana Dunes National Lakeshore Advisory Commission, Michigan City, Ind. (open), 10-19-79

INTERNATIONAL JOINT COMMISSION—UNITED STATES AND CANADA

55070 9-24-79 / Water quality of the Poplar River, Scobey, Mont., 10-16 and 10-17-79

LABOR DEPARTMENT

Employment and Training Administration—

56052 9-28-79 / Federal Committee on Apprenticeship, Landover, Md. (open, 10-17 and 10-18-79)

Labor Statistics Bureau—

54132 9-18-79 / Business Research Advisory Council Committee, Washington, D.C. (open), 10-15 and 10-16-79

METRIC BOARD

54381 9-19-79 / Personnel matters, Dearborn, Mich. (closed), 10-18 and 10-19-79

54368 9-19-79 / Public forum, Dearborn, Mich. (open), 10-18-79

NATIONAL AERONAUTICS AND SPACE ADMINISTRATION

55673 9-27-79 / Informal Executive Subcommittee of the NASA Advisory Council, Boulder, Colo. (closed), 10-17-79

NATIONAL SCIENCE FOUNDATION

56064 9-28-79 / Advisory Committee for Behavioral and Neural Sciences Subcommittee for Sensory Physiology and Perception, Washington, D.C. (partially open), 10-17 through 10-19-79

56063 9-28-79 / Subcommittee for Geography and Regional Science of the Advisory Committee for Social and Economic Science, Washington, D.C. (partially open), 10-15 and 10-16-79

56064 9-28-79 / Subcommittee for Ocean Sciences Research of the Advisory Committee for Ocean Sciences; Washington, D.C. (closed), 10-18 and 10-19-79

56063 9-28-79 / Subcommittee on Genetic Biology of the Advisory Committee for Physiology; Washington, D.C. (closed), 10-18 through 10-20-79

56063 9-28-79 / Subcommittee on Political Science of the Advisory Committee for Social and Economic Science, Washington, D.C. (closed), 10-19 and 10-20-79

56064 9-28-79 / Subcommittee on Population Biology and Physiological Ecology of the Advisory Committee for Environmental Biology, Washington, D.C. (closed), 10-18 and 10-14-79

NUCLEAR REGULATORY COMMISSION

56409 10-1-79 / Advisory Committee on Reactor Safeguards, Subcommittee on Radiobiological Effects and Site Evaluation, Washington, D.C. (open), 10-16 and 10-17-79

56768 10-2-79 / Reactor Safeguards Advisory Committee, Subcommittee on Emergency Core Cooling Systems (ECCS), Washington, D.C. (open), 10-17 and 10-18-79

SMALL BUSINESS ADMINISTRATION

50421 8-28-79 / Region I Advisory Council, Providence, R.I. (open), 10-15-79

56772 10-2-79 / Region II Advisory Council, Monroeville, Penn. (open), 10-19-79

56419 10-1-79 / Region V Advisory Council, Madison, Wis. (open), 10-16-79

52066 9-6-79 / Region VI Advisory Council, Kerrville, Tex. (open), 10-19-79

54574 9-20-79 / Region VI Advisory Council, Dallas, Tex. (open), 10-15-79

54574 9-20-79 / Region X Advisory Council, Boise, Idaho (open), 10-16-79

54574 9-20-79 / Region X Advisory Council, Seattle, Wash. (open), 10-19-79

55262 9-25-79 / Region IX Advisory Council, Phoenix, Ariz. (open), 10-17-79

55262 9-25-79 / Region X Advisory Council, Spokane, Wash. (open), 10-17-79

56088 9-28-79 / Region X Advisory Council, Portland, Oreg. (open), 10-18-79

56772 10-2-79 / Region III Advisory Council, Clarksburg, W. Va. (open), 10-18-79

55262 9-25-79 / Region III Advisory Council, Wilkes-Barre, Pa. (open), 10-18-79

State Department—

56088 9-28-79 / Shipping Coordinating Committee, Washington, D.C. (open), 11-20-79

TRANSPORTATION DEPARTMENT

Federal Railroad Administration—

55075 9-24-79 / Minority Business Resource Center Advisory Committee, Washington, D.C. (open), 10-15-79

National Highway Traffic Safety Administration—

15823 3-15-79 / Biomechanics Advisory Committee, Washington, D.C. (open), 10-16 and 10-17-79

34235 6-14-79 / Biomechanics Advisory Committee, Washington, D.C., 10-16 and 10-17-79

34235 6-14-79 / Planning; Public Industry Technical meeting, Ann Arbor, Mich. (open), 10-17-79

VETERANS ADMINISTRATION

54581 9-20-79 / Station Committee on Educational Allowances, Fargo, N. Dak. (open), 10-15-79

53602 9-14-79 / Wage Committee, Washington, D.C. (closed), 10-18-79

Next Week's Public Hearings

AGRICULTURE DEPARTMENT

Agricultural Marketing Service—

55184 9-25-79 / Spearmint oil produced in the Far East; hearing, Pasco, Wash., 10-16-79

COMMERCE DEPARTMENT

National Oceanic and Atmospheric Administration—

55914 9-28-79 / Mid-Atlantic Fishery Management Council:

Narragansett, R.I., 10-15-79

Falmouth and Gloucester, Mass.; 10-16 and 10-17-79

Portland, Maine, 10-18-79

Asbury Park and Cape May, N.J., 10-18 and 10-19-79

ENERGY DEPARTMENT

52140 9-6-79 / Electric and hybrid vehicle research, development, and demonstration program; Performance standards for demonstrations, Washington, D.C., 10-16-79

Economic Regulatory Administration—

54902 9-21-79 / Mandatory petroleum price regulations; Equal application rule and allocation of increased cost at retail level, Denver, Colo., 10-18-79

50605 8-29-79 / Phased Deregulation of Upper Tier Crude Oil, Abuquerque, N. Mex., 10-16-79

Office of the Secretary—

52842 9-11-79 / Outer Continental Shelf oil and gas sequential bidding; leasing, Washington, D.C., 10-15-79

ENVIRONMENTAL PROTECTION AGENCY

54069 9-18-79 / Requirements for preparation, adoption and submittal of implementation plans, hearings, San Francisco, Calif., 10-18 and 10-19-79

54069 9-18-79 / Requirements for preparation, adoption and submittal of implementation plans, hearings, Washington, D.C., 10-15 and 10-16-79

57107 10-4-79 / State Implementation Plans; requirements for preparation, adoption, and submittal, Washington, D.C., 10-15 through 10-19-79

HEALTH, EDUCATION, AND WELFARE DEPARTMENT

Food and Drug Administration—

47105 8-10-79 / Hearing aids; exemption from preemption of State and local requirements, hearing, Rockville, Md., 10-16 and 10-17-79

47699, 47713 8-14-79 / Protection of human research subjects, Houston, Texas, 10-16-79 (2 documents)

56026 9-28-79 / Psychopharmacological Drugs Advisory Committee, Rockville, Md., 10-15 and 10-16-79

INTERIOR DEPARTMENT

Surface Mining Reclamation and Enforcement Office—

56272 9-28-79 / Surface coal mining and reclamation operations permanent regulatory program, Denver, Colo., 10-18-79

LABOR DEPARTMENT

Mine Safety and Health Administration—

53540 9-14-79 / Independent contractors, Dallas, Tex., 10-18-79

53540 9-14-79 / Independent contractors, Minneapolis, Minn., 10-16-79

LIBRARY OF CONGRESS

Copyright Office—

52260 9-7-79 / Compulsory license for making and distributing phonorecords, Arlington, Va., 10-19-79

POSTAL RATE COMMISSION

12306 3-6-79 / Express mail metro service, 1978, Washington, D.C., 10-18-79

TRANSPORTATION DEPARTMENT

Federal Railroad Administration—

52783 9-10-79 / National Railroad Passenger Corporation, hearing, Boston, Mass., 10-18-79

52783 9-10-79 / National Railroad Passenger Corporation, hearing, Philadelphia, Pa., 10-16-79

List of Public Laws

Last Listing October 3, 1979

This is a continuing listing of public bills from the current session of Congress which have become Federal laws. The text of laws is not published in the Federal Register but may be ordered in individual pamphlet form (referred to as "slip laws") from the Superintendent of Documents, U.S. Government Printing Office, Washington, D.C. 20402 (telephone 202-275-3030).

S. 544 / Pub. L. 96-79 "Health Planning and Resources Development Amendments of 1979". (Oct. 4, 1979; 93 Stat. 592) Price $2.25.

Documents Relating to Federal Grant Programs

This is a list of documents relating to Federal grant programs which were published in the Federal Register during the previous week.

RULES GOING INTO EFFECT

56325 10-1-79 / HUD/CPD—Community Development Block Grant; uniform relocation assistance and real property acquisition; effective 11-8-79

56324 10-1-79 / HUD/Sec'y—Uniform relocation assistance and real property acquisition, Community Development Block Grant Program; effective 11-8-79

56868 10-2-79 / Labor/ETA—Comprehensive Employment and Training Act; Regulations for programs under Parts A and C of Title IV of the Act; effective 10-1-79

56684 10-2-79 / USDA/FmHA—Development grants for community domestic water and waste disposal systems; effective 10-2-79

56919 10-3-79 / USDA/FmHA-Rural housing loan grants; procedures; effective 10-3-79

56920 10-3-79 / USDA/FmHA—Servicing of community program loans and grants; effective 10-3-79

56920 10-3-79 / USDA/FmHA—Business and Industrial Loan Program; effective 10-3-79

56937 10-3-79 / HEW/PHS—Grants for residency training in general internal medicine or general pediatrics; effective 10-3-79

DEADLINES FOR COMMENTS ON PROPOSED RULES

56955 10-3-79 / EPA—Review and award of research grants and cooperative agreements; comments by 11-2-79

56725 10-2-79 / NFAH—National Endowment for the Arts; nondiscrimination on the basis of age; comments by 11-15-79

APPLICATIONS DEADLINES

56660 10-1-79 / National Telecommunications and Information Administration—Public telecommunications facilities program; apply by 1-9-80

OTHER ITEMS OF INTEREST

56402 10-1-79 / HEW/Sec'y—Policy Research on Work and the Aged; announcement of awards

57855 10-5-79 / OMB—Uniform Administrative Requirements for Grants-in-Aid to State and Local Governments: Circular A-102