12-31-79
Vol. 44 No. 251
Pages 77125-77498

federal register

Monday
December 31, 1979

NOTE:

Due to a shortage of newsprint, today's Federal Register is printed on a higher quality paper. As supplies become available, the Federal Register will resume the use of newsprint.

Highlights

77125 Panama Military Education and Training Assistance Presidential determination

77264 Medicare Supplementary Medical Insurance Program HEW/Sec'y announces monthly adequate actuarial rates for aged and disabled; effective 7-1-80

77267 Educational and Socioeconomic Programs Interior/BIA sets aside funds to establish Osage Tribal Educational Committee, and accepts applications for financial assistance for second semester 1979-80 academic year

77284 State Science, Engineering, and Technology Program NSF proposes guidelines and criteria; comments by 1-30-80

77490 Housing For the Elderly or Handicapped Direct Loan Program HUD/FHC announces availability of Fiscal Year 1980 loan authority (Part VIII of this issue)

77233, 77286, 77294 Privacy Act CPSC, NTPSC and Treasury/Sec'y publish documents affecting systems of records (3 documents)

77460, 77235 Privacy Act FRS and CPSC issue annual publication of systems of records (2 documents)

CONTINUED INSIDE

FEDERAL REGISTER Published daily, Monday through Friday, (not published on Saturdays, Sundays, or on official holidays), by the Office of the Federal Register, National Archives and Records Service, General Services Administration, Washington, D.C. 20408, under the Federal Register Act (49 Stat. 500, as amended; 44 U.S.C. Ch. 15) and the regulations of the Administrative Committee of the Federal Register (1 CFR Ch. I). Distribution is made only by the Superintendent of Documents, U.S. Government Printing Office, Washington, D.C. 20402.

The Federal Register provides a uniform system for making available to the public regulations and legal notices issued by Federal agencies. These include Presidential proclamations and Executive Orders and Federal agency documents having general applicability and legal effect, documents required to be published by Act of Congress and other Federal agency documents of public interest. Documents are on file for public inspection in the Office of the Federal Register the day before they are published, unless earlier filing is requested by the issuing agency.

The Federal Register will be furnished by mail to subscribers, free of postage, for $5.00 per month or $50 per year, payable in advance. The charge for individual copies of 75 cents for each issue, or 75 cents for each group of pages as actually bound. Remit check or money order, made payable to the Superintendent of Documents, U.S. Government Printing Office, Washington, D.C. 20402.

There are no restrictions on the republication of material appearing in the Federal Register.

Area Code 202-523-5240

Highlights

77356 **Revenue Sharing** Treasury/RSO proposes rules regarding nondiscrimination on the basis of age or handicap, and technical and procedural amendments; comments by 2-29-80 (Part III of this issue)

77328, 77348 **Freight Cars, Locomotives, Passenger Cars and Cabooses** DOT/FRA adopts safety standards; effective 1-31-80 and 3-1-80 (Part II of this issue) (2 documents)

77155 **Income Tax** Treasury/IRS issues temporary regulations relating to the foreign earned income exclusion; effective 12-31-77

77161 **Unleaded Gasoline Availability** EPA issues enforcement policy; effective 12-31-79

77210 **Seat Belts** DOT/NHTSA proposes to specify additional performance requirements for both manual and automatic safety belt assemblies; comments by 4-1-80

77199 **Light Trucks** DOT/NHTSA proposes establishment of average fuel economy standards for trucks manufactured in model years 1982-85; comments by 1-30-80 on proposed 1982 standards; comments by 3-31-80 on proposed 1983-85 standards

77440, 77447, 77454, 77456, 77458 **Surface Coal Mining and Reclamation Operations** Interior/SMRE amends rules and proposes rules regarding interim and permanent regulatory programs, and holds hearing and extends comment period on Wyoming Permanent Regulatory Program; various effective and comment dates, hearing 1-7-80 (5 documents) (Part IV of this issue)

77470 **Health and Safety Data Reporting** EPA proposes submission of health and safety studies on specifically listed chemicals; comments by 2-29-80 (Part VI of this issue)

77293 **Federal-Aid Highway Projects** DOT/FHWA publishes interim instructions regarding implementation of regulations issued by CEQ under NEPA; effective 11-30-79

77298 **Sunshine Act Meetings**

Separate Parts of This Issue

77328 **Part II, DOT/FRA**
77356 **Part III, Treasury/RSO**
77440 **Part IV, Interior/SMRE**
77460 **Part V, FRS**
77470 **Part VI, EPA**
77482 **Part VII, OMB**
77490 **Part VIII, HUD/FHC**

Contents

Federal Register
Vol. 44, No. 251
Monday, December 31, 1979

The President
ADMINISTRATIVE ORDERS
77125 Panama, military education and training assistance (Presidential Determination No. 80-8 of Dec. 18, 1979)

Executive Agencies

Actuaries, Joint Board for Enrollment
NOTICES
Meetings:
77274 Actuarial Examinations Advisory Committee

Agricultural Marketing Service
RULES
Milk marketing orders:
77135 Middle Atlantic
77133 Oranges (navel) grown in Ariz. and Calif.
77134 Papayas grown in Hawaii

Agriculture Department
See also Agricultural Marketing Service; Farmers Home Administration; Federal Crop Insurance Corporation; Forest Service.
PROPOSED RULES
Natural gas; essential agricultural uses:
77187 Process fuel; definition
NOTICES
Import quotas and fee:
77226 Sugar; quarterly determinations

Air Force Department
NOTICES
Meetings:
77236 Scientific Advisory Board

Alcohol, Drug Abuse, and Mental Health Administration
NOTICES
Committees; establishment, renewals, terminations, etc.:
77263 Rape Prevention and Control Advisory Committee
Meetings:
77262 Advisory committees; January

Antitrust Division
NOTICES
Competitive impact statements and proposed consent judgments:
77274 Arden-Mayfair, Inc., et al.
77278 Continental Group, Inc., et al.

Arts and Humanities, National Foundation
NOTICES
Meetings:
77283 Literature Advisory Panel
77283 Music Advisory Panel

Canada and United States—International Joint Commission
NOTICES
77273 Lake Erie ice boom; extension of order of approval

Civil Aeronautics Board
PROPOSED RULES
Accounts and reports for certificated air carriers; uniform system:
77189 Statistical reporting requirements for small carriers and new entrants, etc.
NOTICES
All-cargo air service certificate application
77227 Certificates of public convenience and necessity and foreign air carrier permits
Hearings, etc.:
77228 Commuter Airlines Inc. enforcement proceeding
77228 Former large irregular air service investigation

Commerce Department
See Industry and Trade Administration; Maritime Administration; National Oceanic and Atmospheric Administration; National Technical Information Service.

Commodity Futures Trading Commission
NOTICES
Futures contracts, proposed; availability:
77233 New York Mercantile Exchange
77298 Meetings; Sunshine Act

Community Services Administration
RULES
Grantees; funding:
77163 Federal Register and Code of Federal Regulations; sole issuance system; access to publications; correction

Comptroller of Currency
RULES
National banks; recordkeeping and confirmation requirements for transactions

Consumer Product Safety Commission
RULES
77150 Organization and functions
PROPOSED RULES
77196 Freedom of Information Act; implementation
NOTICES
77233 Privacy Act; systems of records
77235 Privacy Act; system of records; annual publication

Customs Service
NOTICES
77294 Customs regulations; reprinted looseleaf edition; availability

Defense Department
See also Air Force Department; Defense Nuclear Agency; Engineers Corps.
RULES
77158 Defense Acquisition Regulation; notice of revision of 1976 edition

Defense Nuclear Agency
NOTICES
Meetings:
77237 Scientific Advisory Group on Effects

Economic Regulatory Administration
NOTICES
Crude oil, domestic; allocation program; 1979; entitlement notices:
77239 October
Remedial orders:
77238 Canyon Lake Marina, Inc.
77239 Clearview Gulf Service Center
77238 Expressway 66
77238 Hilliard Chevron Service Station
77238 I-75 & Warren Shell
77238 Wright's Freeway Texaco

Energy Department
See also Economic Regulatory Administration; Energy Information Administration; Energy Research Office; Federal Energy Regulatory Commission; Hearings and Appeals Office, Energy Department.
NOTICES
International atomic energy agreements; civil uses; subsequent arrangements:
77259 European Atomic Energy Community and Sweden (2 documents)

Energy Information Administration
NOTICES
77248 Natural gas, high cost; alternative fuel price ceilings and incremental price threshold; correction

Energy Research Office
NOTICES
Meetings:
77248 High Energy Physics Advisory Panel (2 documents)

Engineers Corps
NOTICES
Environmental statements; availability, etc.:
77236 Snohomish Mediated Plan, Wash.
77237 Swan Pond golf course complex, Manorville, N.Y.

Environmental Protection Agency
RULES
Air programs; fuel and fuel additives:
77161 Unleaded gasoline availability; enforcement policy
PROPOSED RULES
Air quality implementation plans; approval and promulgation:
77199 State plans; visability protection; advance notice; workshops
Toxic substances:
77470 Health and safety data reporting; submission of lists and studies
NOTICES
Environmental statements; availability, etc.:
77261 Agency statements; review and comment

Farmers Home Administration
PROPOSED RULES
77183 Appeals procedure
NOTICES
77226 Mailing list for program regulations, administrative notices, and forms; establishment

Federal Communications Commission
RULES
Radio broadcasting:
77164 Monitoring stations; protection from radio interference
Radio stations; table of assignments:
77163 Indiana
NOTICES
Hearings, etc.:
77262 Broadcast Management, Inc., et al.

Federal Crop Insurance Corporation
RULES
Crop insurance; various commodities:
77132 Tomatoes and sweet corn

Federal Election Commission
RULES
Presidential Election Campaign Fund:
77137 Federal financing of Presidential nominating conventions; correction
77136 Federal financing of Presidential nominating conventions; effective date announced; existing regulations removed

Federal Emergency Management Agency
RULES
Flood insurance; communities eligible for sale:
77161 Georgia et al.

Federal Energy Regulatory Commission
RULES
Practice and procedures:
77155 Adjustments from Commission rules and orders; hearing cancelled
PROPOSED RULES
Natural Gas Policy Act of 1978:
77198 Incremental pricing; industrial users not granted exemption from program by statute; hearings
NOTICES
Hearings, etc.:
77248 Alabama Power Co.
77249 Cliffs Electric Service Co.
77249 El Paso Natural Gas Co., et al.
77249 Gulf States Utilities Co.
77249 Inland Gas Co., Inc.
77250 Mid Louisiana Gas Co.
77250 Minnesota Power & Light Co. (2 documents)
77251 Missouri Power & Light Co.
77251 Mobil Oil Corp., et al.
77252 Montaup Electric Co.
77252 Natural Gas Pipeline Co. of America
77253 Northern Natural Gas Co.
77253 Otter Tail Power Co.
77253 Panhandle Eastern Pipe Line Co.
77254 Philadelphia Electric Co.
77254 Public Service Co. of New Mexico
77256 Sea Robin Pipeline Co.
77257 Southern California Edison Co.
77257 Southeastern Power Administration et al.
77257 Tennessee Gas Pipeline Co.
77258 Transcontinental Gas Pipe Line Corp.
77258 Trunkline Gas Co.
77259 Vermont Electric Power Co., Inc.

Natural Gas Policy Act of 1978:
77252 Alternative filing requirements application receipts

Federal Highway Administration
NOTICES
77293 Environmental impact and related procedures

Federal Home Loan Bank Board
NOTICES
77298 Meetings; Sunshine Act

Federal Housing Commissioner
NOTICES
Mortgage and loan insurance program:
77490 Elderly or handicapped direct loan program; fund availability for FY 1980

Federal Railroad Administration
RULES
77328 Freight car safety standards
77348 Locomotives, passenger cars and cabooses; safety glazing standards
NOTICES
77293 Locomotive Inspection Test Program; extension of test period; second supplemental report and order

Federal Reserve System
RULES
Truth-in-lending (Regulation Z):
77139 Annual percentage rates; calculation and disclosure
NOTICES
77460 Privacy Act; systems of records; annual publication

Federal Trade Commission
RULES
Prohibited trade practices:
77149 RR International, Inc., et al.

Fiscal Service
RULES
Bonds, U.S. savings:
77158 Series E and H; termination of sale

Fish and Wildlife Service
RULES
Fishing:
77173 Audubon National Wildlife Refuge N. Dak., et al.
77171 J. N. "Ding" Darling National Wildlife Refuge, Fla., et al.
Public entry and use:
77168 Chincoteague National Wildlife Refuge, Va.
77169 Salt Plains National Wildlife Refuge, Okla., et al.
NOTICES
77272, 77273 Endangered and threatened species permits; applications (4 documents)

Forest Service
NOTICES
Land use plans:
77273 Utah; coal mining unsuitability study
Meetings:
77226 Humboldt National Forest Grazing Advisory Board

Health, Education, and Welfare Department
See also Alcohol, Drug Abuse, and Mental Health Administration.
NOTICES
Medicare, supplementary medical insurance:
77264 Actuarial and premium rates (July 1980–June 1981)
Meetings:
77263 Ethics Advisory Board
77263 White House Conference on Families National Advisory Committee
77264 White House Conference on Families; national hearings

Hearings and Appeals Office, Energy Department
NOTICES
Applications for exception:
77259 Decisions and orders

Housing and Urban Development Department
See Federal Housing Commissioner.

Indian Affairs Bureau
NOTICES
Irrigation projects, operation and maintenance charges:
77266 Wapato, Wash.
Judgment funds; plan for use and distribution:
77267 Osage Tribe

Industry and Trade Administration
RULES
77182 Agency nomenclature change

Interior Department
See Fish and Wildlife Service; Indian Affairs Bureau; Land Management Bureau; Surface Mining Office.

Internal Revenue Service
RULES
Income taxes:
77155 Foreign earned income exclusion; temporary regulation

International Trade Commission
NOTICES
77298 Meetings; Sunshine Act

Interstate Commerce Commission
NOTICES
Environmental statements; availability, etc.:
77295 Motor carrier task force proposals on entry control; withdrawal of notice of intent
77295 Fourth section applications for relief
Railroad car service orders; various companies:
77296 Kansas City Terminal Railroad Co.
Railroad operation, acquisition, construction, etc.:
77295 Chicago & Illinois Western Railroad Co.

Justice Department
See also Antitrust Division
RULES
Organization, functions, and authority delegations:
77157 Associate Attorney General; Federal equal opportunity recruitment program
77157 Public Affairs Office
NOTICES
Pollution control; consent judgments:
77283 Washington Surburban Sanitary Commission et al.

Land Management Bureau
NOTICES
Airport leases:
77268 California
Authority delegation:
77271 Alaska State Office; Chief, Lands and Minerals Operations Branch, Technical Services Division, et al.
77269 Idaho; Idaho Falls District Area Managers
Coal leases:
77268 New Mexico
77269 Grazing use adjustments; 1979 reductions; special right to appeal
Management framework plans; review and supplement:
77273 Utah; coal mining unsuitability study
Meetings:
77272 Susanville District Grazing Advisory Board
Outer Continental Shelf:
77270 Oil and gas leasing; North Atlantic; area nominations and comments
77268 Potassium leases; Eddy County, New Mexico
Wilderness areas; characteristics, inventories, etc.:
77269 Utah (2 documents)
Withdrawal and reservation of lands, proposed etc.:
77270 New Mexico

Management and Budget Office
NOTICES
77290 Agency forms under review
77482 Budget rescissions and deferrals
Improving Government regulations:
77286 Semiannual agenda for directives
Meetings:
77292 National Agenda for the Eighties, President's Commission

Maritime Administration
NOTICES
Applications, etc.:
77228 Waterman Steamship Corp.

Minimum Wage Study Commission
NOTICES
77283 Meetings

National Credit Union Administration
NOTICES
77298
Meetings; Sunshine Act

National Highway Traffic Safety Administration
PROPOSED RULES
Fuel economy standards, average:
77199 Truck, light; 1982–85 model years
Motor vehicle safety standards:
77224 Rearview mirrors
77210 Seat belt assemblies

National Mediation Board
NOTICES
77298 Meetings; Sunshine Act

National Oceanic and Atmospheric Administration
RULES
77174 Squid fishery; Northwest Atlantic
NOTICES
Environmental statements: availability, etc.:
77229 Monterey Bay, Calif.; marine sanctuary; meeting
Marine mammal permit applications, etc.:
77230 Elsner, Robert
77230 Minnesota Zoological Garden
77229 Northwest Fisheries Center
77230 USSR Ministry of Fishing Industry
Marine sanctuaries:
77228 Shrewsbury Rocks, N.J.
Meetings:
77229 National Marine Fisheries Service State/Federal activities; interjurisdictional resource management

National Science Foundation
NOTICES
77284 State science, engineering, and technology program; proposed guidelines and criteria; inquiry

National Technical Information Service
NOTICES
77231, 77232 Inventions, Government-owned: availability for licensing (3 documents)

National Transportation Safety Board
NOTICES
77299 Meetings; Sunshine Act (2 documents)

Nuclear Regulatory Commission
RULES
Radioactive material packaging:
77135 Environmental statement on transportation; inspection of licensees involved in shipment; enforcement guidelines
NOTICES
77299 Meetings; Sunshine Act

Panama Canal Commission
RULES
77160 Freedom of Information Act; implementation; fee schedule

Personnel Management Office
RULES
77127 Agency administrative grievance system
Excepted service:
77127 Federal Home Loan Bank Board and Environmental Protection Agency; correction

Railroad Retirement Board
NOTICES
77299 Meetings; Sunshine Act

Revenue Sharing Office
PROPOSED RULES
Fiscal assistance to State and local governments:
77356 Nondiscrimination on the basis of age and handicapped in federally-assisted programs

State Department
NOTICES
Meetings:
77292 Oceans and International Environmental and Scientific Affairs Advisory Committee

Surface Mining Office
RULES
Surface coal mining and reclamation enforcement operations:
77447, 77454 Permanent regulatory program; suspensions (2 documents)
77440 Permanent regulatory program on Federal lands; operator compliance schedule effective date postponement and preservation of applicability of designation process
PROPOSED RULES
Surface coal mining and reclamation enforcement operations:
77456 Permanent regulatory program; sediment control performance standards; advance notice
NOTICES
Permanent program submission; various States:
77458 Wyoming; extension of time

Tennessee Valley Authority
NOTICES
Environmental statements; availability, etc.:
77292 Murphy Hill 500-kV substation and transmission line connections, Ala.

Transportation Department
See Federal Highway Administration; Federal Railroad Administration; National Highway Traffic Safety Administration.

Transportation Policy Study, National Commission
RULES
77127 CFR regulations removed
NOTICES
77286 Privacy Act; systems of records; revocation and transfer to GSA

Treasury Department
See also Comptroller of Currency; Customs Service; Fiscal Service; Internal Revenue Service; Revenue Sharing Office.
NOTICES
77294 Privacy Act; systems of records; correction

MEETINGS ANNOUNCED IN THIS ISSUE

AGRICULTURE DEPARTMENT
Forest Service—
77226 Humboldt National Forest Grazing Advisory Board, 1-30-80

ARTS AND HUMANITIES, NATIONAL FOUNDATION
77283 National Council on the Arts, Literature Panel, 1-17 through 1-20-80
77283 National Council on the Arts, Music Panel, 1-14 through 1-16-80

COMMERCE DEPARTMENT
National Oceanic and Atmospheric Administration—
77229 Interjurisdictional resource management, 1-29, 1-30 and 1-31-80

DEFENSE DEPARTMENT
Air Force Department—
77236 USAF Scientific Advisory Board, 1-22 and 1-23-80
Defense Nuclear Agency—
77237 Scientific Advisory Group on Effects, 2-19 through 2-22-80

ENERGY DEPARTMENT
Energy Research Office—
77248 High Energy Physics Advisory Panel, 1-21 and 1-22-80
77248 High Energy Physics Advisory Panel, Subpanel on Accelerator R & D, 1-17 and 1-18-80

ENVIRONMENTAL PROTECTION AGENCY
77199 Protection of visibility, public workshops, 1-22, 1-23, and 1-25-80

HEALTH, EDUCATION, AND WELFARE DEPARTMENT
77262 Alcohol, Drug Abuse, and Mental Health Administration—Mental Health Small Grant Review Committee, 1-31 through 2-2-80 National Advisory Council on Drug Abuse, 1-24 and 1-25-80
Center for Disease Control—
77263 Ethics Advisory Board, 2-1 and 2-2-80
Office of the Secretary—
77263 White House Conference on Families National Advisory Committee, 1-23 through 1-25-80

INTERIOR DEPARTMENT
Land Management Bureau—
77272 District Grazing Advisory Board, 2-5-80

JOINT BOARD FOR THE ENROLLMENT OF ACTUARIES
77274 Advisory Committee on Actuarial Examinations, 1-29-80

MANAGEMENT AND BUDGET OFFICE
77292 President's Commission for a National Agenda for the Eighties, 1-11-80

MINIMUM WAGE STUDY COMMISSION
77283 Meeting, 1-8-80

STATE DEPARTMENT
Office of the Secretary—
77292 Oceans and International Environmental and Scientific Affairs Advisory Committee, 1-17-80

HEARINGS

ENERGY DEPARTMENT
Federal Energy Regulatory Commission—
77198 Proposed incremental pricing program to include industrial users of natural gas, requests to participate by 1-11-80, hearings 1-18, 1-21, 1-23, 1-25 and 1-29-80

HEALTH, EDUCATION, AND WELFARE DEPARTMENT
Office of the Secretary—
77264 White House Conference on Families, 1-11 and 1-12-80

CFR PARTS AFFECTED IN THIS ISSUE

A cumulative list of the parts affected this month can be found in the Reader Aids section at the end of this issue.

1 CFR
445 77127

3 CFR
Administrative Orders:
Presidential Determinations:
No. 80-8 of December 18, 1979 77125

5 CFR
213 77127
771 77127

7 CFR
401 77132
907 77133
928 77134
1004 77135
Proposed Rules:
1900 77183
2900 77187

10 CFR
71 77135

11 CFR
107 (2 documents) 77136, 77137
114 (2 documents) 77136, 77137
120 77137
121 77137
122 77137
123 77137
124 77137
125 77137
9008 (2 documents) 77136, 77137

12 CFR
12 77137
226 77139

14 CFR
Proposed Rules:
241 77189

15 CFR
Ch. III 77182

16 CFR
13 77149
1000 77150
Proposed Rules:
1015 77196

18 CFR
1 77155
Proposed Rules:
282 77198

26 CFR
5B 77155

28 CFR
0 (2 documents) 77157
42 77157

30 CFR
701 77440
715 77447
717 77447
741 77440
761 77440
769 77440
783 77454
785 77454
816 (2 documents) 77447, 77454
817 (2 documents) 77447, 77454
823 77454
Proposed Rules:
715 77456
717 77456
816 77456
817 77456

31 CFR
316 77158
332 77158
339 77158
Proposed Rules:
51 77356

32 CFR
1-39 77158

35 CFR
9 77160

40 CFR
80 77161
Proposed Rules:
51 77199
716 77470

44 CFR
64 77161

45 CFR
1067 77163

47 CFR
Ch. I 77163
0 77164
5 77164
21 77164
22 77164
23 77164
25 77164
73 77164
74 77164
78 77164
81 77164
87 77164
90 77164
94 77164
95 77164
97 77164
99 77164

49 CFR
215 77328
223 77348
Proposed Rules:
533 77199
571 (2 documents) 77210, 77224

50 CFR
26 (2 documents) 77168, 77169
33 (2 documents) 77171, 77173
655 77174

Federal Register
Vol. 44, No. 251
Monday, December 31, 1979

Presidential Documents

Title 3—

The President

Presidential Determination No. 80-8 of December 18, 1979

Determination Under Section 28 of the International Security Assistance Act of 1979—Panama

Memorandum for the Secretary of State

Pursuant to the authority vested in me by Section 28 of the International Security Assistance Act of 1979, I hereby determine that the provision of International Military Education and Training under Chapter 5 of Part II of the Foreign Assistance Act of 1961, as amended, to Panama in the fiscal year 1980 would further the national interests of the United States.

You are requested on my behalf to report this determination to the Congress, as required by law.

This determination shall be published in the Federal Register.

THE WHITE HOUSE,
Washington, December 18, 1979.

[FR Doc. 79-39907
Filed 12-27-79; 2:03 pm]
Billing code 3195-01-M

Rules and Regulations

Federal Register
Vol. 44, No. 251
Monday, December 31, 1979

This section of the FEDERAL REGISTER contains regulatory documents having general applicability and legal effect, most of which are keyed to and codified in the Code of Federal Regulations, which is published under 50 titles pursuant to 44 U.S.C. 1510.
The Code of Federal Regulations is sold by the Superintendent of Documents. Prices of new books are listed in the first FEDERAL REGISTER issue of each month.

NATIONAL TRANSPORTATION POLICY STUDY COMMISSION

1 CFR Part 445

Removal of Regulations

Editorial Note: The National Transportation Policy Study Commission was terminated, effective December 28, 1979.

Since the National Transportation Policy Study Commission is legally terminated and its regulations are no longer in force and effect, the Office of the Federal Register is removing 1 CFR Part 445 from the Code of Federal Regulations, in compliance with the provisions of 1 CFR 8.2.

BILLING CODE 6820-36-M

OFFICE OF PERSONNEL MANAGEMENT

5 CFR Part 213

Excepted Service; Federal Home Loan Bank Board; Environmental Protection Agency; Correction

AGENCY: Office of Personnel Management.

ACTION: Final rule.

SUMMARY: This document corrects the paragraph designations of two excepted service appointing authorities published by the Office of Personnel Management on November 6, 1979, and November 27, 1979. These are editorial changes only.

EFFECTIVE DATE: December 31, 1979.

FOR FURTHER INFORMATION CONTACT: Beverly M. Jones, Issuance System Manager (202)-254-7086.

SUPPLEMENTARY INFORMATION: (1) FR Document 79-34263, published November 6, 1979, at 44 FR 64065, incorrectly added § 213.3354(b) to Title 5, CFR. Since paragraph (b) already existed, this document redesignates the paragraph to read § 213.3354(i). (2) FR Document 79-36281, published November 27, 1979, at 44 FR 67620, incorrectly added § 213.3318(a)(2) to Title 5, CFR. Since paragraph (a)(2) already existed, this document redesignates that paragraph to read § 213.3318(a)(3).

(5 U.S.C. 3301, 3302; EO 10577, 3 CFR 1954-1958 Comp., p. 218)

Office of Personnel Management,
Beverly M. Jones,
Issuance System Manager.

[FR Doc. 79-39830 Filed 12-28-79; 8:45 am]

BILLING CODE 6325-01

5 CFR Part 771

Agency Administrative Grievance System

AGENCY: Office of Personnel Management.

ACTION: Final regulation.

SUMMARY: This document revises OPM's regulations governing agency administrative grievance systems. It provides criteria for the establishment and publication of an administrative grievance system by each agency and defines the employee and action coverage governing the system. The revision was undertaken to provide coverage in accordance with provisions of the Civil Service Reform Act.

EFFECTIVE DATE: December 31, 1979.

FOR FURTHER INFORMATION CONTACT: Wilma Lehman, Workforce Effectiveness and Development Group (202) 632-7647.

SUPPLEMENTARY INFORMATION: A proposed Part 771, Agency Administrative Grievance System, was published in the Federal Register on August 3, 1979, (44 FR 45629) and comments were invited. A total of 20 different agencies, labor organizations, and individuals submitted comments and recommendations. Of these, eight recommended publication as a final rule with no material change. Following is a section by section analysis of the comments together with the resulting modifications.

§ *771.201 Purpose.* No comments were expressed with regard to this section.

§ *771.202 Definitions. Bargaining unit employee.* A clarified definition of bargaining unit employee was submitted and adopted.

Employee. The comments about the definition of "employee" were all concerned with the inclusion of former employees: a former employee should be excluded, a former employee should be limited to one who had been actually employed within a definite and recent time period, and a former employee should be permitted to grieve only matters concerning the former employment with the agency for which a valid remedy could be provided. Former employees have been covered in the past and so far as OPM knows there has been little or no difficulty with legitimate grievances for such persons. With respect to limitations on grievances for former employees, the definition of a grievance requires "personal relief in a matter of concern or dissatisfaction relating to the employment . . . which is subject to the control of agency management." The definition of personal relief requires "a specific remedy directly benefiting the grievant. . . ." When the two definitions are read together, OPM believes that proper grievances from former employees are covered and at the same time grievances which cannot or should not be remedied are excluded. It is expected that agency grievance procedures will include appropriate time limits on the filing of grievances. We believe that such time limits as applied to all grievances are more appropriate than time restrictions in a definition of former employee.

Grievance. There were no comments on the definition of grievance.

Grievance file. A definition of "grievance file" was added at the request of one who commented.

Personal relief. One of those commenting requested that examples of personal relief be included. Examples will be included in the Federal Personnel Manual chapter 771. OPM believes that explanatory material is more appropriately included in guidance material rather than in regulation. Another suggested that relief should include action against another employee. This was rejected since OPM does not believe that disciplinary action against another employee is a proper remedy under the administrative grievance system. The agency may,

however, decide to take some action against another employee as a result of facts uncovered by a grievance inquiry.

Two clarifying suggestions, that an "s" be added to grievant to cover group grievances and that the word "directly" be substituted for "only", have been made.

A proposed new definition of personal relief, "a specific remedy which lessens or eliminates the personal effect of the matter grieved", was not adopted because we believe that the definition as amended more clearly expresses the intent of OPM.

§ *771.203 Agency coverage.* No comments were received on this section.

§ *771.204 Employee coverage.*

(a) *Required coverage.* Two recommendations dealt with limiting employees to those with other than temporary appointments. We believe that the grievance system should be available to all employees, whether their appointments are competitive or excepted, temporary or career; that the grievance system should not be reserved for those with certain kinds of appointments if the matter being grieved can be appropriately remedied. Another recommendation was to include bargaining unit employees when negotiated procedures are not available for reviewing the matter. We assume that this refers to matters which the labor organization and the agency have agreed to exclude from coverage of the negotiated grievance procedure. Such coverage under the administrative procedure is properly subject to the discretionary authority of the agency and is provided for in paragraph (b) of this section.

A final comment recommended that the paragraph be changed to read, "Except as provided in § 771.206, this part should cover all nonbargaining unit employees of the agency and those bargaining unit employees who are not covered under a negotiated grievance procedure." As stated in the previous paragraph, OPM believes that the inclusion of bargaining unit employees should be left to the discretion of agencies.

(b) *Discretionary coverage.* Two of those commenting recommended that applicants for employment with the agency be deleted from the discretionary coverage. Since agencies have been delegated examining functions formerly performed by OPM (or the Civil Service Commission), we believe that agencies may wish to consider covering applicants. One remark questioned the meaning of "other" employees. We have amended the paragraph to read "bargaining unit" employees. A final criticism on this paragraph was that an agency should not have authority to extend coverage to bargaining unit employees for matters covered by negotiated procedures. We agree that any extension of coverage to bargaining unit employees can occur only when the agency and the labor organization, in accordance with the provisions of chapter 71 of title 5, United States Code, have agreed to exclude a matter from coverage of the negotiated procedures. Part 771 does not and could not authorize an agency to extend coverage in violation of statute.

§ *771.205 Grievance Coverage.* One of those commenting proposed a paragraph (b) of this section which would permit an agency to extend the administrative grievance coverage to any or all of the exclusions in § 771.206(c). One of the differences between coverage for the administrative grievance system and that of the negotiated system is the exclusion of matters appealable to the Merit Systems Protection Board or reviewable by the Office of Personnel Management or the Equal Employment Opportunity Commission. OPM does not believe that a change in administrative grievance coverage for appealable matters is timely. It is the intent of OPM that matters excluded from negotiated procedures by statute shall also be excluded from agency administrative grievance procedures.

§ *771.206 Exclusions.* (a) *Agencies excluded.* There were no comments on this paragraph.

(b) *Employees excluded.* Failures to exclude (1) Schedule C employees and (2) all individuals paid from nonappropriated funds were two concerns expressed about this subsection. On the other hand, the exclusion of any person paid from nonappropriated funds was also criticized. OPM sees no reason to exclude Schedule C employees from the administrative grievance system because of the confidential or policy making nature of the appointments. With respect to those paid from nonappropriated funds, the exclusions are based on provisions of statute. For example, section 2105(c) of title 5 defines certain individuals paid from nonappropriated funds as employees only for certain specific purposes. At the same time, there are others who are paid from nonappropriated funds who have competitive service appointments and who are covered by Part 771.

One of those commenting recommended that paragraph (b)(6) of this section be eliminated, i.e., delete the authority of OPM to consider and exclude a class of employees upon recommendation by the head of the agency. A second expressed the concern that agencies would misuse this exclusion. OPM would like to point out that the agency does not make additional exclusions; the agency may recommend an exclusion to OPM for consideration. OPM will consider a class of employees for exclusion for which there is good justification.

(c) *Matters excluded.* OPM has reorganized this paragraph. Discussion will be based on the old numbering; the new number of a paragraph will be included in parenthesis.

(1) *(Now (1)(ii)).* Three suggestions were made regarding this exclusion: that "matter" be substituted for "decision"; that the exclusion should read "A decision which is subject to final administrative review outside the agency under law, Executive order or Government-wide regulation"; and that those matters reviewable outside be enumerated and a statement added that "concerns in these areas may be pursued in accordance with the procedures in other regulations."

We have used the general term, matters, to refer to the entire paragraph (c). We believe that "decision" is the term which most nearly describes the matters reviewable by an outside agency. We made specific reference to the Merit Systems Protection Board, the Office of Personnel Management, and the Equal Employment Opportunity Commission because we did not intend to exclude matters on which a complaint may be filed with the Special Counsel from administrative grievance procedures. Under the regulations of the Special Counsel, it is stated that the Special Counsel will generally defer to administrative appeals procedures (including administrative grievance procedures). Finally, OPM does not believe that Part 771, governing the agency administrative grievance system, should enumerate matters covered by law or other regulations. It is planned to include in FPM chapter 771 a detailed discussion regarding the relationship of agency administrative grievances to other appealable or reviewable matters.

(2) *(Now (1)(i)).* There was one suggestion that the phrase "but not the interpretation of" should be added to the exclusion concerning the content of published agency regulations and policy. To adopt the suggested amendment would change the exclusion. Agency policy and regulations are management rights which are not subject to question except as they are applied to an individual.

(3) *(Now (1)(iii)).* Concerns regarding the exclusion of nonselection for promotion from a group of properly ranked and certified candidates, were: it

needs clarification, it should be amended to read "nonselection for promotion or reassignment from a group of final candidates that include the grievant", and it should be deleted. OPM firmly believes that selection for promotion from a list of properly ranked and certified candidates is a function of management. The FPM chapter 771 will discuss the meaning of the exclusion. OPM has not adopted the suggested language since it interprets the current language to require that the grievant be in the group of final candidates to grieve nonselection. It was not intended to exclude a grievance from a candidate concerning an incorrect rating. Further, we do not believe that reassignment belongs in this exclusion since that action is not generally a competitive action. Finally, we do not believe that the exclusion should be deleted.

(4) *(Now (1)(vi))*. Those commenting recommended that the exclusion be deleted, that the time period be reduced to six months, and that the exclusion be clarified. OPM does not believe that an employee who has accepted a temporary promotion should be permitted to grieve the return to his or her former position or to one which is not at a lower grade or pay unless the action is based on misconduct or unacceptable performance. The employee when accepting a temporary promotion agrees to its temporary character and to the return to the previous grade and pay as a condition of the promotion. The language of the exclusion has been amended for the purpose of clarification. In addition, the FPM chapter will include guidance concerning its application.

Finally, the two-year time period for temporary promotion has been in effect since 1968. A time period of six months has been found not to be adequate to cover the uses for which the temporary promotion authority has been approved.

(5) *(Now (1)(viii))*. Recommendations that it be made clear that this exclusion includes negative decisions as well as positive ones and one that it be deleted as an exclusion were submitted. The exclusion has been rewritten in response to the first recommendation. It is OPM's position that decisions regarding awards, employee suggestions, and awards of rank are management decisions which are not grievable.

(6) *(Now (1)(ix))*. One recommendation to omit this exclusion was received. OPM believes that the same reasons as those for exclusion (5) apply to decisions regarding performance awards in the Senior Executive Service and quality step increases.

(7) *(Now (1)(x))*. Of those submitting comments, five recommended either that the exclusion for merit pay determinations and cash or honorary recognition should be discretionary with the agency or not excluded. The basis for the comments is section 5402(b)(2)(C) of title 5, United States Code, which states that determinations to provide pay increases under this paragraph shall be subject to review only in accordance with and to the extent provided by procedures established by the head of the agency. This provision has been implemented in the OPM regulation on merit pay. Further, since an employee's performance appraisal is grievable and since the agency plan for merit pay determinations must establish a link between performance and merit pay, to cover merit pay decisions under Part 771 could result in duplicate grievances, on the performance appraisal itself and on the resulting merit pay decision. OPM has, therefore, retained this exclusion.

(8) *(Now (1)(v))*. It was suggested that OPM express more precisely the language of the statute in this exclusion. This has been done.

(9) *(Now (1)(vii))*. This paragraph has been edited for clarification based on three suggestions. Two other comments recommended that the substance of the critical elements and performance standards established in accordance with the requirements of law and regulation be grievable at the discretion of the agency; a third felt that they should be grievable. OPM believes that application of the critical elements and performance standards is a grievable matter, i.e., the performance appraisal based on established critical elements and performance standards is grievable but that critical elements and performance standards per se when they have been established in accordance with applicable law and regulation, are not grievable.

(10) *(Now (1)(iv))*. One concern expressed was that a preliminary warning or notice of an action which, if effected, would be covered under the grievance system or excluded from coverage by paragraph (c)(1) (now (c)(1)(ii) needs further explanation. This will be done in the FPM chapter.

(11) *(Now (2)(i))*. It was pointed out that the satisfactory completion of the probationary period under subpart H of Part 315 is part of the examining process and, as such, is excluded from negotiated grievance procedures. Since it is our intention not to include in the administrative grievance process any matter excluded from coverage of the negotiated system, a new exclusion (c)(1)(xi) has been added. Exclusion (2)(i) remains discretionary with the agency since it deals not with removal but only with the return to a former position of an employee serving an initial appointment as a supervisor or manager, an employee who has previously served the probationary period for employment in the competitive service.

(12) *(Now (1)(xii))*. One comment remarked that the exclusion of a performance evaluation under subchapter II of chapter 43 should be identified with the Senior Executive Service. OPM believes that since subchapter II deals only with the Senior Executive Service, this is sufficient. A second recommended that this exclusion be discretionary. OPM believes the exclusion must be mandatory because the law provides review procedures for performance appraisals of members of the SES.

(13) *(Now (2)(ii))*. The discretionary exclusion of a separation action not previously excluded has been revised so that it no longer includes the separation of a probationer under subchapter H of Part 315. Further clarification will be included in FPM chapter 771.

There were three general comments on paragraph (c), one that questioned the number of exclusions from the administrative grievance system, another which suggested adding a new exclusion for any matter subject to reconsideration under a separate administrative procedure consistent with the fact-finding procedures under section 771.302(b), and a third which recommended an exclusion from the grievance procedure for oral admonishments or warnings regarding an employee's performance or conduct. With regard to the first, OPM believes that the number of exclusions is not excessive. Administrative grievances are defined by the exclusions; any "matter of concern or dissatisfaction relating to the employment of the employee(s) which is subject to the control of agency management" for which personal relief can be granted, is grievable unless the employee or the matter is excluded.

OPM has not adopted the suggestion of an additional exclusion for separate administrative procedures. We believe that agency grievance procedures should cover all matters which are subject to internal review by an agency. Recognition is, however, made of the need for different procedures within the agency grievance system, procedures which are appropriate for the matter being grieved. We firmly believe that all internal review procedures should be administered under the criteria in Part 771 governing administrative grievances.

The third comment regarding oral admonishments or warnings was not adopted as a separate exclusion because we fail to see how these meet the definition of a grievance in that there is no apparent personal relief.

§ *771.301 Establishment and publication.* No comments were received on this section.

§ *771.302 Criteria.* (a) No comments were received on this subsection. (b) OPM has revised this paragraph in response to several recommendations. Guidance has been included regarding when a hearing is appropriate. The paragraph now reads:

"Procedures . . . shall provide for factfinding, when appropriate, which shall include a hearing when one is suitable to fully develop the circumstances concerning the grievance . . ."

It is OPM's intent that fact-finding be used whenever there is a dispute over facts. Fact-finding, however, may vary from a request, for example, to an engineer to determine the amount of light in a specific work area to a full adversary-type hearing. It can consist of an investigation, informal interviews, or discussion between the parties. A hearing is to be provided when the facts can best be determined through that method.

One of those commenting suggested that a definition of fact-finding be included. OPM will include in the FPM chapter 771 a discussion of the various kinds of fact-finding.

Another expressed a concern that informal inquiries should not be excluded. OPM agrees that grievances should be resolved, whenever possible, at the supervisory level and as simply as possible. In many instances, this can be achieved by a discussion between the grievant and the supervisor. Still another held the belief that hearings should be mandated whenever questions of fact are contested. As stated above, OPM does not agree that hearings are suitable in all circumstances.

Finally, it was suggested that this paragraph specify who chooses the fact-finder, outline his or her scope of authority, and clarify and reduce the restrictions that (1) the fact-finder shall not "have been involved in" the matter being grieved and (2) the term "subordinate to" any official who recommended, etc. It is beyond the authority of OPM to mandate specific agency delegations of authority. OPM has prescribed characteristics which it believes the fact-finder must meet. OPM will include in the FPM chapter 771 a discussion of the qualifications of the fact-finder.

(c)(1) One of those commenting asked that a statement that the agency can take disciplinary action for abuse of the grievance system be added. OPM agrees that, under certain circumstances, it may be appropriate for the supervisor to restrict the amount of official time when an employee spends an inordinate amount of worktime preparing and presenting a number of grievances which have no basis in fact.

(c)(2) One statement criticized this paragraph for not listing specific instances of circumstances under which a representative must be disallowed. OPM believes that this is not feasible and that the disallowance of a representative must depend upon the circumstances in each grievance. Another response stated that a representative should not be disallowed unless the agency clearly demonstrates that a direct conflict of interest exists and that the disallowance be subject to appeal. We agree that the question of the appropriateness of a disallowance of a representative is a matter which the grievant may include as a threshold issue in his or her grievance for decision by the deciding official.

(c)(3) Two comments stated that official time should include time to prepare the grievance while a third recommended that a specific statement be added that official time does not include preparation time. Part 771 in the past has required official time only for the presentation of the grievance. The granting of additional time for preparation has been left to agency discretion. No reasons have been presented which indicate a need for change with respect to official time. Additionally, OPM sees no need to prevent an agency from allowing a reasonable amount of official time for preparation.

(c)(4) Two criticisms were received on this paragraph that as worded it could require unnecessary escalation. OPM has amended this statement to read:

The right to communicate with the servicing personnel office or a counselor of the agency.

One of those commenting asked what type of counselor was meant. OPM did not intend to limit the type of counselor.

(d) No comments were submitted on this paragraph.

(e) Two comments recommended that the grievant be given a copy of the grievance file. OPM believes that it is unnecessary to duplicate the grievance file so long as the grievant has free and reasonable access to all of the material in the file. Two of those commenting recommended that a grievance file be established at any time a grievance is filed and that Part 771 should describe the minimum contents of the file. OPM regulation establishes minimum requirements. There would be no objection if any agency required the establishment of a file on a grievance that was settled informally. OPM does not believe, however, that the establishment of such a requirement in Part 771 would serve a useful purpose. A definition of grievance file has been included in § 771.202 which includes a brief statement of its contents.

(f) Those concerned with this paragraph indicated that the decision should be in writing at all times, that the decision should be in writing only when the employee is required to put the grievance in writing, and that the written requirement will have the effect of circumventing informal resolution and raise the matter past the supervisor. Agencies may wish to have a written record of all grievances, whether settled informally or whether decided after fact-finding procedures. On the other hand, OPM sees no reason to require a written decision when the supervisor and the grievant have settled the matter informally. We did not intend that a requirement for a written decision when the grievance is presented in writing discourage the informal resolution of administrative grievances.

Additionally, one of those commenting questioned the authority of the fact-finder in making the decision. OPM feels that either the fact-finder or another official who has not previously been involved in the grievance (except when the deciding official is head of the agency) may make the final decision. Delegations of authority are made by the head of the agency within the restrictions prescribed by OPM. Some agencies will delegate authority to the fact-finder to make a final decision while others will authorize this individual only to make findings of fact and recommend a decision.

Two comments requested clarification of the restriction on the deciding official that he or she be at a higher level than any employee involved in any phase of the grievance. OPM will include a discussion in the FPM of the meaning of "involved".

771.303 Obligation of the Grievant. A new section concerning the obligation of the grievant has been inserted at the request of one of those submitting comments. The new section requires the employee filing a grievance, whether orally or in writing, to do so within any appropriate time limits established in the agency procedures, to explain his or her concerns, and to identify the personal relief being sought.

771.304 (Incorrectly numbered 771.302 in the proposed regulation) Review by the Office of Personnel Management. Two comments were received on this section: that OPM should approve agency administrative grievance plans before implementation and that OPM should review individual complaints that an agency administrative grievance system violates regulatory requirements. OPM believes that the administration of a plan is more important than the plan itself. OPM may undertake a review of an allegation that some provision of an agency administrative grievance system violates Part 771 upon receipt of factual information specifically describing the alleged system violation. OPM does not, however, have authority to review individual grievances.

The Office of Personnel Management would like to express its appreciation for the observations, criticisms, suggestions, and recommendations submitted by individuals, agencies, and labor organizations. The comments have been most helpful in drafting the final Part 771.

The Director of the Office of Personnel Management finds that because of the need to clarify the coverage of the administrative grievance system for new programs being implemented under the Civil Service Reform Act, good cause exists for suspending the 30-day delay in effecting final rules required by 5 U.S.C. 553(d).

Office of Personnel Management,
Beverly M. Jones,
Issuance System Manager.

Accordingly, the Office of Personnel Management is revising 5 CFR Part 771 to read as follows:

PART 771—AGENCY ADMINISTRATIVE GRIEVANCE SYSTEM

Subpart A—[Reserved]

Subpart B—General

Sec.
771.201 Purpose.
771.202 Definitions.
771.203 Agency coverage.
771.204 Employee coverage.
771.205 Grievance coverage.
771.206 Exclusions.

Subpart C—Establishment of Agency Administrative Grievance System

771.301 Establishment and publication.
771.302 Criteria.
771.303 Obligation of the grievant.
771.304 Review by the Office of Personnel Management.

Authority: 5 U.S.C. 1302, 3301, 3302, 7301; E.O. 9830, 3 CFR 1943–1948 Comp., pp. 606–624; E.O. 11222, 3 CFR 1964–1969 Comp., p. 306.

Subpart A—[Reserved]

Subpart B—General s

§ 771.201 Purpose.

This part sets forth the regulations under which each agency shall establish an agency administrative grievance system.

§ 771.202 Definitions.

In this part:

"Bargaining unit employee" means an employee included in an appropriate exclusive bargaining unit as determined by the Federal Labor Relations Authority for which a labor organization has been granted exclusive recognition.

"Employee" includes a former employee of an agency for whom a remedy can be provided.

"Grievance", except as provided in § 771.206 of this part, means a request by an employee, or by a group of employees acting as individuals, for personal relief in a matter of concern or dissatisfaction relating to the employment of the employee(s) which is subject to the control of agency management.

"Grievance file" means a separate file which contains all documents related to the grievance, including but not limited to any statements of witnesses, records or copies thereof, the report of the hearing when one is held, statements made by the parties to the grievance, and the decision.

"Personal relief" means a specific remedy directly benefiting the grievant(s) and may not include a request for disciplinary or other action affecting another employee.

§ 771.203 Agency coverage.

Except as provided in §771.206(a), this part applies to the executive agencies and military departments as defined by sections 102 and 105 of title 5, United States Code, and to those organizational units of the legislative and judicial branches having positions in the competitive service.

§ 771.204 Employee coverage.

(a) *Required coverage.* Except as provided in § 771.206(b), this part shall cover all nonbargaining unit employees of the agency.

(b) *Discretionary coverage.* An agency may extend the coverage of this part to bargaining unit employees consistent with the provisions of 5 U.S.C. 7121, or to applicants for employment with the agency.

§ 771.205 Grievance coverage.

Except as provided in § 771.206(c), this part applies to any matter of concern or dissatisfaction relating to the employment of an employee which is subject to the control of agency management, including any matter on which an employee alleges that coercion, reprisal, or retaliation has been practiced against him or her.

§ 771.206 Exclusions.

(a) *Agencies excluded.* This part does not apply to the Central Intelligence Agency, the Federal Bureau of Investigation, the Defense Intelligence Agency, the National Security Agency, the Nuclear Regulatory Commission, the Tennessee Valley Authority, the Postal Rate Commission, and the U.S. Postal Service.

(b) *Employees excluded.* This part does apply to:

(1) A noncitizen appointed under Civil Service Rule VIII, § 8.3 of this title;

(2) An alien appointed under section 1471(5) of title 22, United States Code;

(3) An individual paid from funds as defined in section 2105(c) of title 5 or section 4202(5) of title 38, United States Code;

(4) A physician, dentist, nurse, or other employee appointed under chapter 73 of title 38, United States Code;

(5) A member of the Foreign Service of the United States covered under the Foreign Service Grievance System as defined in Part J of Title VI of the Foreign Service Act of 1946, as amended; or

(6) An employee otherwise included under § 771.204(a) of this subpart when he or she is a member of a class of employees excluded from coverage by the Office on the recommendation of the head of the agency concerned.

(c) *Matters excluded.* (1) This part does not apply to:

(i) The content of published agency regulations and policy;

(ii) A decision which is appealable to the Merit Systems Protection Board or subject to final administrative review by the Office of Personnel Management or the Equal Employment Opportunity Commission under law or regulations of the Office or the Commission.

(iii) Nonselection for promotion from a group of properly ranked and certified candidates;

(iv) A preliminary warning notice of an action which, if effected, would be covered under the grievance system or excluded from coverage by paragraph (c)(1)(ii) of this section;

(v) A return of an officer or employee from the Senior Executive Service to the General Schedule during the one year period of probation or for less than fully successful executive performance under section 3592 of title 5, United States Code;

(vi) An action which terminates a temporary promotion within a maximum period of two years and returns the employees to the position from which the employee was temporarily promoted, or reassigns or demotes the employee to a different position that is not at a lower grade or pay than the position from which the employee was temporarily promoted;

(vii) The substance of the critical elements and performance standards of an employee's position which have been established in accordance with the requirements of subchapter I of chapter 43 of title 5, United States Code, and Part 430 of this title;

(viii) The granting of or failure to grant an employee performance award or the adoption of or failure to adopt an employee suggestion or invention under sections 4503–4505, or the granting of or failure to grant an award of the rank of meritorious or distinguished executive under section 4507 of title 5, United States Code;

(ix) The receipt of or failure to receive a performance award under section 5384 of title 5, United States Code, or a quality salary increase under section 5336 of title 5, United States Code;

(x) A merit pay determination or a merit pay increase or the lack of a merit pay increase under the Merit Pay System, or a decision on the granting of or failure to grant cash or honorary recognition under Chapter 54 of Title 5, United States Code, and Part 540 of this title;

(xi) The termination under Subpart H of Part 315 of this title of a probationer for unsatisfactory performance;

(xii) A performance evaluation under subchapter II of chapter 43 of title 5, United States Code.

(2) This part does not apply to the following actions unless the agency extends the coverage to any aspect of them:

(i) A return of an employee from an initial appointment as a supervisor or manager to a nonsupervisory or nonmanagerial position for failure to satisfactorily complete the probationary period under section 3321(a)(2) of title 5, United States Code, and Subpart I of Part 315 of this title; and

(ii) A separation action not excluded by paragraph (c)(1) of this section.

Subpart C—Establishment of Agency Administrative Grievance System

§ 771.301 Establishment and publication.

(a) *Establishment.* Each agency covered by this part shall establish and administer an agency grievance system in accordance with the criteria in § 771.302 of this subpart.

(b) *Publication.* Each agency shall publish and make available to employees copies of its administrative grievance procedures.

§ 771.302 Criteria.

The following criteria shall govern the establishment and administration of an agency administrative grievance system:

(a) Prompt consideration of each grievance, including reasonable time limits for processing the grievance.

(b) Procedures appropriate for the matter being grieved which provide the employee a reasonable opportunity to present a grievance and receive fair consideration of the matter being grieved. The procedures shall provide for fact-finding, when appropriate, which shall include a hearing when one is suitable to ascertain the circumstances concerning the grievance. Fact-finding procedures shall be carried out by a person(s) who has not been involved in the matter being grieved and who does not occupy a position subordinate to any official who recommended, advised, made a decision on, or who otherwise is or was involved in, the matter being grieved.

(c) Assurance to the grievant of:

(1) Freedom from restraint, interference, coercion, discrimination or reprisal in presenting a grievance;

(2) The right to be accompanied, represented, and advised by a representative of his or her own choosing, except that an agency may disallow the choice of an individual as a representative which would result in a conflict of interest or position, which would conflict with the priority needs of the agency, or which would give rise to unreasonable costs to the Government;

(3) A reasonable amount of official time to present the grievance if the employee is otherwise in a duty status; and

(4) The right to communicate with the servicing personnel office or a counselor of the agency.

(d) Assurance to the employee's representative of:

(1) Freedom from restraint, interference, coercion, discrimination or reprisal; and

(2) A reasonable amount of official time to present the grievance if the representative is an employee of the agency and is otherwise in a duty status;

(e) When fact-finding is utilized, establishment of a grievance file which is made available to the grievant and his or her representative for review and comment;

(f) At any time an employee places a grievance in writing, a written decision, which includes a report of findings and reasons for the determination, made by:

(1) An official at a higher level than any employee involved in any phase of the grievance, except when the head of the agency has been involved, or

(2) The official(s) designated to determine the disputed facts.

§ 771.303 Obligation of the grievant.

An employee in exercising the entitlement to present a grievance under this part shall:

(a) Comply with appropriate time limits established by the agency;

(b) Furnish sufficient detail to clearly identify the matter being grieved; and

(c) Specify the personal relief being requested.

§ 771.304 Review by the Office of Personnel Management.

The Office of Personnel Management shall review from time to time each agency administrative grievance system developed under this part to determine whether the administrative grievance system meets the requirements of this part. The Office shall require corrective action to bring a system which fails to meet the requirements into conformity. The Office does not act on a request by an employee to review the processing of, or the decision on, an individual grievance.

[FR Doc. 79-39829 Filed 12-28-79; 8:45 am]
BILLING CODE 6325-01-M

DEPARTMENT OF AGRICULTURE

Federal Crop Insurance Corporation

7 CFR Part 401

[Amdt. No. 103]

Federal Crop Insurance Regulations for the 1969 and Succeeding Crop Years

AGENCY: Federal Crop Insurance Corporation.

ACTION: Final rule.

SUMMARY: This rule amends the Federal Crop Insurance Regulations for the 1969 and Succeeding Crop Years (7 CFR 401.101–401.111) by adding additional counties where tomato, and canning and freezing sweet corn crop insurance is available effective for the 1980 and succeeding crop years. The counties listed in this amendment were approved by the Board of Directors of the Federal Crop Insurance Corporation under the authority contained in the Federal Crop Insurance Act, as amended.

EFFECTIVE DATE: December 31, 1979.

ADDRESS: Suggestions or comments on this notice should be sent to James D. Deal, Manager, Federal Crop Insurance

Corporation, U.S. Department of Agriculture, Washington, D.C. 20250.

FOR FURTHER INFORMATION CONTACT: Peter F. Cole, Secretary, Federal Crop Insurance Corporation, U.S. Department of Agriculture, Washington, D.C. 20250, telephone 202–447–3325.

SUPPLEMENTARY INFORMATION: On Wednesday, January 3, 1979, the Federal Crop Insurance Corporation published in the Federal Register Amendment No. 101 to the Federal Crop Insurance Regulations for the 1969 and Succeeding Crop Years (44 FR 749–761), which listed those counties designated by the Manager of the Corporation for various crop insurance programs effective with the 1979 crop year.

On November 23, 1979, the Board of Directors of the Corporation approved additional counties where tomato, and canning and freezing sweet corn crop insurance programs will be available effective with the 1980 crop year.

This notice is being issued to update the Federal Crop Insurance Regulations for the 1969 and Succeeding Crop Years to include those newly approved counties. Inasmuch as the publication of counties designated by the Manager of the Corporation merely adds approved counties where tomato, and canning and freezing sweet corn are available, and since producers need to be informed of these additions immediately, it is found and determined by James D. Deal, Manager, that good cause exists for issuing this rule without compliance with the notice and public participation provisions of the Administrative Procedure Act (5 U.S.C. 553 (b) and (c), and Executive Order No. 12044).

Final Rule

Accordingly, under the authority contained in the Federal Crop Insurance Act (7 U.S.C. 1501 *et seq.*), the Federal Crop Insurance Regulations for the 1969 and Succeeding Crop Years (32 FR 15911, November 21, 1967) as found in 7 CFR Part 401, are hereby amended by adding the following appendix to § 401.101 effective for the 1980 and succeeding crop years. The counties designated in the following appendix are in addition to those designated in Amendment No. 101 to the Federal Crop Insurance Regulations for the 1969 and Succeeding Crop Years (44 FR 749–761, Wednesday, January 3, 1979).

§ 401.101 [Amended]

Appendix

The counties where additional programs of crop insurance are authorized to be offered and the crops on which such insurance is offered under the provisions of 7 CFR Part 401 are as follows:

Counties Designated for Canning and Freezing Sweet Corn Crop Insurance:

Wisconsin

Fond du Lac, Green Lake, Waushara.

Counties Designated for Tomato Crop Insurance:

California

San Joaquin.

(Secs. 505, 516, 52 Stat. 73, as amended, 77, as amended (7 U.S.C. 1505, 1516))

Issued in Washington, D.C., on December 11, 1979.

Peter F. Cole,

Secretary, Federal Crop Insurance Corporation.

Approved by:

James D. Deal,

Manager.

Dated: December 19, 1979.

[FR Doc. 79-39322 Filed 12-28-79; 8:45 am]

BILLING CODE 3410-08-M

Agricultural Marketing Service

7 CFR Part 907

[Navel Orange Regulation 471, Amdt. 1]

Navel Oranges Grown in Arizona and Designated Part of California; Amendment of Size Requirements

AGENCY: Agricultural Marketing Service, USDA.

ACTION: Amendment to final rule.

SUMMARY: This amendment relieves restrictions on the handling of California-Arizona navel oranges by permitting the shipment of navel oranges which are larger than 3.70 inches in diameter (size 48) during the period December 21, 1979, through January 17, 1980. The supply of larger size oranges has not materialized in the volume anticipated and action is needed to permit shipment of the larger sizes during the specified period in recognition of market demand for such sizes in the interest of producers and consumers.

EFFECTIVE DATE: December 21, 1979.

FOR FURTHER INFORMATION CONTACT: Malvin E. McGaha, 202–447–5975.

SUPPLEMENTARY INFORMATION: *Findings.* This amendment is issued under the marketing agreement, as amended, and Order No. 907, as amended (7 CFR Part 907), regulating the handling of navel oranges grown in Arizona and designated part of California. The agreement and order are effective under the Agricultural Marketing Agreement Act of 1937, as amended (7 U.S.C. 601–674). This action is based upon recommendations and information submitted by the Navel Orange Administrative Committee, and upon other available information. It is hereby found that this action will tend to effectuate the declared policy of the act.

The size requirements, herein specified, for fresh shipments of California-Arizona navel oranges reflect the Department's appraisal of the current and prospective demand for such oranges during the specified period. Because of the growing conditions in the production area, the amount of larger sized fruit is less than was anticipated and there is a need to permit shipment of the larger size fruit as specified. The 1979–80 navel orange crop is forecast at 58,000 carloads, about one-third larger than the 43,496 carloads produced in 1978–79. The committee has estimated that about 36,500 carloads will be needed to fill demand in regulated fresh market outlets.

It is further found that it is impracticable and contrary to the public interest to give preliminary notice, engage in public rulemaking, and postpone the effective date of this amendment until 30 days after publication in the Federal Register (5 U.S.C. 553) in that the time intervening between the date when information upon which this amendment is based became available and the time when this amendment must become effective in order to effectuate the declared policy of the act is insufficient; and this amendment relieves restrictions on the handling of navel oranges grown in Arizona and designated part of California.

Further, in accordance with procedures in Executive Order 12044, the emergency nature of this amendment warrants publication without opportunity for further public comment. The amendment has not been classified significant under USDA criteria for implementing the Executive Order. An Impact Analysis is available from Malvin E. McGaha, Chief, Fruit Branch, Fruit and Vegetable Division, AMS, USDA, Washington, D.C. 20250, telephone 202–447–5975.

Accordingly, § 907.771 Navel Orange Regulation 471; 44 FR 75376, is hereby amended by revising paragraph (a), redesignating paragraph (b) as paragraph (c) and inserting a new paragraph (b). As so amended § 907.771 reads as follows:

§ 907.771 Navel Orange Regulation 471.

(a) During the period December 21, 1979, through January 17, 1980, no handler shall handle any navel oranges grown in Districts 1, 2, 3, or 4 which are smaller than 2.32 inches in diameter, such diameter to be the largest measurement at a right angle to a

straight line running from the stem to the blossom end of the fruit: *Provided,* That not to exceed 5 percent, by count, of the oranges in any container may measure smaller than 2.32 inches in diameter.

(b) During the period January 18, 1980, through February 14, 1980, no handler shall handle any navel oranges grown in Districts 1, 2, 3, or 4 which are of a size larger than 3.70 inches in diameter or which are of a size smaller than 2.32 inches in diameter, such diameter to be the largest measurement at a right angle to a straight line running from the stem to the blossom end of the fruit: *Provided,* That not to exceed 5 percent, by count, of oranges in any type of container may measure larger than 3.70 inches in diameter and not to exceed 5 percent, by count, of oranges in any type of container may measure smaller than 2.32 inches in diameter.

(c) As used in this section, "handle", "District 1," "District 2," "District 3," and "District 4" mean the same as defined in the marketing order.

(Secs 1–19, 48 Stat. 31, as amended; 7 U.S.C. 601–674)

Dated: December 21, 1979.

D. S. Kuryloski,

Deputy Director, Fruit and Vegetable Division, Agricultural Marketing Service.

[FR Doc. 79-39745 Filed 12-28-79; 8:45 am]

BILLING CODE 3410-02-M

---

7 CFR Part 928

[Papaya Reg. 10]

Papayas Grown in Hawaii; Grade and Size Requirements

AGENCY: Agricultural Marketing Service, USDA.

ACTION: Final rule.

SUMMARY: This regulation sets grade and size requirements for papayas grown in Hawaii for the 1980 season and is needed to provide orderly marketing in the interest of producers and consumers.

EFFECTIVE DATES: January 1–December 31, 1980.

FOR FURTHER INFORMATION CONTACT: Malvin E. McGaha, 202–447–5975.

SUPPLEMENTARY INFORMATION: *Findings.* On December 6, 1979, notice was published in the Federal Register (44 FR 70176) inviting written comments not later than December 21, 1979, on proposed grade and size requirements applicable to shipments of Hawaiian papayas during the 1980 season. None were received.

This regulation is issued under the marketing agreement and Order No. 928 (7 CFR Part 928), regulating the handling of papayas grown in Hawaii. The agreement and order are effective under the Agricultural Marketing Agreement Act of 1937, as amended (7 U.S.C. 601–674). The action is based upon the recommendation and information submitted by the Papaya Administrative Committee, and upon other information.

Practically all the U.S. commercial papaya production is grown in Hawaii. The fruit is not well known to consumers in many market areas, and the thrust of the committee's promotional activity carried out under the marketing agreement and order is to introduce the fruit to prospective consumers as well as to encourage increased purchases by those who already are acquainted with the fruit. To expand and to maintain markets it is essential that the fruit offered to consumers be of a quality that will result in consumer satisfaction.

The regulation is based upon an appraisal of the prospective supply and market situation for papayas during the period January 1–December 31, 1980. It is designed to assure consumers of an adequate supply of acceptable quality papayas consistent with the quality and size composition of the crop. The committee estimates that 1980 production of Hawaiian papayas will total 60 million pounds. Disposition objectives are for 53 million pounds to fresh sales and the remaining 7 million pounds to processing outlets. In-state fresh sales are projected at 13.5 million pounds for 1980, compared to 10.5 million pounds estimated for 1979. It is anticipated that out-of-state fresh sales will amount to 39.5 million pounds, 15 million pounds more than in 1979.

After consideration of all relevant matters presented, including the proposal in the notice and other available information, it is hereby found that the following regulation is in accordance with the marketing agreement and order and will tend to effectuate the declared policy of the act.

It is further found that good cause exists for not postponing the effective date of this regulation until 30 days after publication in the Federal Register (5 U.S.C. 553) in that (1) shipments of papayas will be regulated only through December 31, 1979, by Papaya Regulation 10, as amended, and, in order to effectuate the declared policy of the act, this regulation should be effective not later than January 1, 1980, to provide continuity of regulation; (2) this regulation is the same as that which was specified in the notice to which no exceptions were submitted; and (3) compliance with this regulation will not require any special preparation on the part of the persons subject thereto which cannot be completed by the effective date hereof.

This regulation has been reviewed under USDA criteria for implementing Executive Order 12044. A determination has been made that this action should not be classified "significant." A final impact analysis is available from Malvin E. McGaha, Chief, Fruit Branch, F&V, AMS, USDA, Washington, D.C. 20250, telephone 202–447–5975.

§ 928.310 Papaya Regulation 10.

Order. (a) No handler shall ship any container of papayas (except immature papayas handled pursuant to § 928.152 of this part):

(1) During the period January 1 through April 15, 1980, to any destination within the production area unless said papayas grade at least Hawaii No. 1, except that allowable tolerances for defects may total 10 percent: *Provided,* That not more than 5 percent shall be for serious damage, not more than 1 percent for immature fruit, and not more than 1 percent for decay: *Provided further,* That such papayas shall individually weigh not less than 11 ounces each.

(2) During the period April 16 through December 31, 1980, to any destination within the production area unless said papayas grade at least Hawaii No. 1, except that the allowable tolerances for defects shall be 5 percent: *Provided,* That not more than 3 percent shall be permitted for serious damage, not more than 1 percent for immature fruit, and not more than 1 percent for decay: *Provided further,* That such papayas individually weigh not less than 13 ounces each.

(3) During the period January 1 through April 15, 1980, to any export destination unless said papayas grade at least Hawaii No. 1, except that the allowable tolerances for defects may total 10 percent: *Provided,* That not more than 5 percent shall be for serious damage, not more than 1 percent for immature fruit, and not more than 1 percent for decay: *Provided further,* That such papayas shall individually weigh not less than 11 ounces each.

(4) During the period April 16 through December 31, 1980, to any export destination unless said papayas grade at least Hawaii No. 1, except that they shall be free from injury caused by bruises and free from deep scars; and scars, when scaly, cracked or not smooth, shall not aggregate a circle greater than 1 inch in diameter, or when smooth shall not aggregate more than 7.5 percent of the surface of the fruit, except that the total tolerance for all defects shall not exceed 3 percent: *Provided,* That of this amount not more than 1

percent shall be for immature fruit and not more than 1 percent shall be for decay: *Provided further,* That such papayas shall individually weigh not less than 11 ounces each.

(b) When used herein, "Hawaii No. 1" shall have the same meaning as set forth in the Standards for Hawaii Grown Papayas, as amended, Subsection 5.32, Section 5, Regulation 1, Division of Marketing and Consumer Services, Department of Agriculture, State of Hawaii, issued pursuant to Section 147-4, Part I, and Section 147-22, Part II, Chapter 147, Title 11, Volume 3, Hawaii Revised Statutes. All other terms shall have the same meaning as when used in the marketing agreement and order.

(Secs. 1-19, 48 Stat. 31, as amended; 7 U.S.C. 601-674)

Dated December 26, 1979, to become effective January 1, 1980.

Charles R. Brader,

Director, Fruit and Vegetable Division, Agricultural Marketing Service.

[FR Doc. 79-39746 Filed 12-28-79; 8:45 am]

BILLING CODE 3410-02-M

7 CFR Part 1004

[Milk Order No. 4]

Milk in the Middle Atlantic Marketing Area; Order Suspending a Certain Provision

AGENCY: Agricultural Marketing Service, USDA.

ACTION: Suspension of rule.

SUMMARY: This order suspends an order provision affecting the regulatory status of fluid milk distributing plants. The suspension makes inoperative for December 1979 and January 1980 the requirement that a distributing plant use at least 40 percent of its milk for fluid use before it is eligible to have all of its milk pooled and priced under the order. This action was requested by a regulated handler and will permit producers who have been regularly supplying the market to continue to have their milk pooled and priced under the order.

DATE: Order of suspension is effective December 31, 1979, for the months of December 1979 and January 1980.

FOR FURTHER INFORMATION CONTACT: Clayton H. Plumb, Marketing Specialist, Dairy Division, Agricultural Marketing Service, U.S. Department of Agriculture, Washington, D.C. 20250, (202) 447-6273.

SUPPLEMENTARY INFORMATION: Prior document in this proceeding: Notice of proposed suspension—issued December 4, 1979, published December 7, 1979 (44 FR 70483).

This order of suspension is issued pursuant to the provisions of the Agricultural Marketing Agreement Act of 1937, as amended (7 U.S.C. 601 *et seq.*), and of the order regulating the handling of milk in the Middle Atlantic marketing area.

Notice of proposed rulemaking was published in the Federal Register (44 FR 70483) concerning a proposed suspension of a provision of the order. Interested persons were afforded opportunity to file written data, views, and arguments thereon.

§ 1004.7 [Amended]

After consideration of all relevant material, including the proposal set forth in the aforesaid notice, data, views, and arguments filed thereon, and other available information, it is hereby found and determined that for the months of December 1979 and January 1980 the following provision of the order does not tend to effectuate the declared policy of the Act:

In § 1004.7(a) the words "not less than 40 percent".

Statement of Consideration

The suspension will make inoperative for December 1979 and January 1980 the provision that at least 40 percent of the receipts of milk at a pool distributing plant be disposed of as Class I milk. The suspension was requested by Michaels Dairies, Inc., a proprietary handler who operates a pool distributing plant.

Michaels Dairies, Inc. indicates that it expects its Class I disposition to be less than 40 percent of the milk supply associated with its distributing plant because of the cancellation of a substantial Class I milk contract with Dover Air Force Base, Dover, Delaware. The failure of proponent's plant to meet the pooling requirements would result in the milk of producers who are regular suppliers of proponent's fluid milk requirements not being priced and pooled under the order.

Maryland and Virginia Milk Producers Association, Inc. supports the suspension action. The cooperative agrees that the pooling problem faced by proponent represents sufficient need to take suspension action for the months of December 1979 and January 1980. No opposition to the proposed suspension was received.

Suspension of the pooling provision will afford the handler time to make changes in its milk procurement and/or its Class I sales to remedy its pooling problem. Without suspension action there is a threat that producers supplying proponent's plant will not be able to share uniformly with other producers supplying the market the proceeds from the Class I sales in the market. Thus suspension action is necessary to promote orderly marketing conditions.

It is hereby found and determined that thirty days' notice of the effective date hereof is impractical, unnecessary and contrary to the public interest in that:

(a) This suspension is necessary to reflect current marketing conditions and to maintain orderly marketing conditions in the marketing area in that milk of some producers who regularly supply the fluid market otherwise would be excluded from the pool, thereby causing a disruption in the orderly marketing of milk;

(b) This suspension does not require of persons affected substantial or extensive preparation prior to the effective date; and

(c) Notice of proposed rulemaking was given interested parties and they were afforded opportunity to file written data, views or arguments concerning this suspension.

Therefore, good cause exists for making this order effective upon publication in the Federal Register.

It is therefore ordered, That the aforesaid provisions of the order are hereby suspended for the months of December 1979 and January 1980.

(Secs. 1-19, 48 Stat. 31, as amended; 7 U.S.C. 601-674)

Signed at Washington, D.C., on December 21, 1979.

P. R. "Bobby" Smith,

Assistant Secretary for Marketing and Transportation Services.

[FR Doc. 79-39728 Filed 12-28-79; 8:45 am]

BILLING CODE 3410-02-M

NUCLEAR REGULATORY COMMISSION

10 CFR Part 71

Guidelines for Enforcement of Transportation Regulations

AGENCY: Nuclear Regulatory Commission.

ACTION: Guidelines for Enforcement of Final Rule.

SUMMARY: The Nuclear Regulatory Commission (NRC) amended on October 29, 1979 its regulations for packaging and transportation of radioactive material. The amendments were published in the Federal Register on November 2, 1979 (44 FR 63083) and became effective on December 3, 1979. The amendments require all shipments of radioactive material made by NRC licensees, other than shipments subject to the regulations of the U.S. Postal

Service, to be made in accordance with the regulations of the U.S. Department of Transportation. The regulations were amended to allow the NRC to inspect the activities of its licensees involved with shipment of radioactive materials.

The NRC has issued guidelines which state how the NRC will enforce the new regulations. On December 3, 1979, the NRC issued the following letter to inform all its licensees subject to this regulation of the new enforcement procedures:

FOR FURTHER INFORMATION CONTACT: James H. Sniezek (301) 492-8980.

SUPPLEMENTARY INFORMATION: To: All NRC Licensees.

CRITERIA FOR ENFORCEMENT ACTION FOR FAILURE TO COMPLY WITH 10 CFR 71: The Commission on October 29, 1979, amended its regulations in 10 CFR Part 71, effective December 3, 1979, pertaining to the packaging and shipment of radioactive material for transportation. 44 Fed. Reg. 63083 (Nov. 2, 1979). The amended regulations reflect a concern that the basic cause of many of the growing number of incidents involving shipment of radioactive material can be attributed to the use of defective shipping containers or to improper loading and preparation of packages for shipment. The amendments do not alter any substantive requirements but will permit the Commission to increase its inspection activities and take enforcement action where warranted. Therefore, the Criteria for Determining Enforcement Action and Categories of Noncompliance with AEC Regulatory Requirements, dated December 31, 1974, is being supplemented to advise licensees of the guidelines the Office of Inspection and Enforcement will be using to determine enforcement action in the area of transportation.

Accordingly, this is to notify you (1) that failures to comply with the requirements of 10 CFR 71 will be categorized in one of the four severity levels described in the attached guidelines and, (2) that severity level I or II noncompliance will normally result in either civil penalties or more severe enforcement action.

General Guidelines for Determining Severity Levels for Transportation Enforcement Action [1]

Severity level	*1974 criteria*
I	Violation.
II	Violation.
III	Infraction.
IV	Deficiency.

[1] The severity levels listed below correspond to the severity levels in the December 31, 1974 criteria as follows:

Severity Level I

- Any noncompliance which contributes to a breach of package integrity resulting in surface contamination or external radiation levels in excess of NRC or DOT requirements.
- Any noncompliance which contributes to the existence of surface contamination or external radiation levels a factor of two above NRC or DOT requirements but did not result from a breach of package integrity.
- Any noncompliance with NRC or DOT transportation requirements that contributed to personnel exposure in excess of the limits set forth in 10 CFR 20.
- Failure to make required initial notifications associated with the foregoing noncompliance.

Severity Level II

- Any noncompliance with NRC or DOT transportation requirements which contributes to a breach of package integrity resulting in surface contamination or external radiation levels which are not in excess of NRC or DOT requirements.
- Any noncompliance which contributes to the existence of surface contamination or external radiation levels in excess of, but less than a factor of two above NRC or DOT requirements and which did not result from a breach of package integrity.
- Noncompliance with marking, labelling, placarding, shipping paper, or other requirements which could result in:

(1) Improper identification of the type, quantity, or form of material or;

(2) The failure of the carrier or recipient to exercise adequate controls or;

(3) An increase in the potential for personnel exposure or contamination.

- Failure to make required initial notifications associated with the foregoing noncompliance.

Severity Level III

- Any noncompliance involving package selection or preparation which does not result in a breach of package integrity nor surface contamination or external radiation levels in excess of NRC or DOT requirements.

Severity Level IV

- Noncompliance with administrative requirements which reasonably would not result in improper identification of radioactive material, adequate carrier or recipient controls, nor an increase in the potential for personnel exposure or contamination.

Dated at Bethesda, Maryland this 14th day of December, 1979.

For the Nuclear Regulatory Commission.

Victor Stello, Jr.,

Director, Office of Inspection and Enforcement.

[FR Doc. 79-39578 Filed 12-28-79; 8:45 am]

BILLING CODE 7590-01-M

FEDERAL ELECTION COMMISSION

11 CFR Parts 107, 114, 120-125 and 9008

[Notice 1979-26]

Presidential Election Campaign Fund: Federal Financing of Presidential Nominating Conventions

AGENCY: Federal Election Commission.

ACTION: Final Rule: Announcement of Effective Date and Deletion of Existing Regulations.

SUMMARY: On Thursday, November 1, 1979 (44 FR 63036-63045) the Commission published the text of revised regulations to implement the Federal Financing of Presidential Nominating Conventions which were submitted to Congress on October 26, 1979, pursuant to 26 U.S.C. 9009(c). Technical corrections are being published in a separate rule today.

The revised regulations designated as 11 CFR, Chapter I, Subchapter F, Part 9008 supersede the regulations presently in 11 CFR, Chapter I, Subchapter B, Parts 120 through 125.

The Commission announces that the revised regulations will become effective as of December 31, 1979, and currently deletes existing regulations appearing in 11 CFR, Chapter I, Subchapter B, and 11 CFR Part 107.

EFFECTIVE DATE: December 31, 1979.

FOR FURTHER INFORMATION CONTACT: Ms. Patricia Ann Fiori, Assistant General Counsel, 1325 K Street, N.W., Washington, D.C. 20463. (202) 523-4143.

SUPPLEMENTARY INFORMATION: 26 U.S.C. 9009(c) requires that any rule or regulation prescribed by the Commission to implement Chapter 95 Title 26, United States Code, be transmitted to the Speaker of the House of Representatives and the President of the Senate prior to final promulgation. If neither House of Congress disapproves the regulations within 30 legislative days after their transmittal, the Commission may finally prescribe the regulations in question. The revised regulations being made effective by this notice were transmitted to Congress October 26, 1979. Thirty legislative days passed as of the close of business December 20, 1979.

11 CFR, Chapter I, Subchapter A, Part 107; 11 CFR 114.1(a)(2)(viii); and 11 CFR, Chapter I, Subchapter F, Part 9008 (44 FR 6309–63045, as corrected by FR Doc. 79–39609) are effective as of December 31, 1979. Regulations presently appearing at 11 CFR Part 107 and 11 CFR Parts 120 through 125 are hereby deleted as of December 31, 1979.

Dated: December 21, 1979.

Robert O. Tiernan,

Chairman, Federal Election Commission.

PART 107 [DELETED]

PARTS 120–125 [DELETED]

11 CFR is amended by deleting Parts 107 and 120–125 and adding a new Part 9008. (See 44 FR 63036 as corrected by FR Doc. 79–39609 appearing elsewhere in this issue of the Federal Register.)

[FR Doc. 79-39901 Filed 12-28-79; 8:45 am]

BILLING CODE 6715-01-M

11 CFR Parts 107, 114, and 9008

[Notice 1979-25]

Presidential Election Campaign Fund: Federal Financing of Presidential Nominating Convention; Correction

AGENCY: Federal Election Commission.

ACTION: Final rule: Correction.

SUMMARY: The Commission makes technical corrections to the Transmittal of Regulations to Congress to implement the Federal Financing of Conventions published on November 1, 1979, at 44 FR 63036–63045.

EFFECTIVE DATE: December 31, 1979.

FOR FURTHER INFORMATION CONTACT: Ms. Patricia Ann Fiori, Assistant General Counsel, 1325 K Street, N.W., Washington, D.C. 20453, (202) 523–4143.

The following technical corrections hereby made to 11 CFR: Parts 107, 114, and 9008:

1. 11 CFR 9008.8(b)(3)(v)(C): delete "11 CFR 9008.8(b)(3)(vi)" and insert "11 CFR 9008.8(b)(4)(v)."

2. 11 CFR 9008.8(b)(4)(v)(D): delete "11 CFR 9008.8(b)(3)(vi)" and insert "11 CFR 9008.8(b)(4)(v)."

3. 11 CFR 9008.10(g)(2): delete "national party" and insert "national committee."

4. 11 CFR Part 107: After the heading insert: "Authority: 2 U.S.C. § 437."

5. 11 CFR Part 114: After the heading insert: "Authority: 2 U.S.C. § 441b."

Dated: December 21, 1979.

Robert O. Tiernan,

Chairman, Federal Election Commission.

[FR Doc. 79-39609 Filed 12-28-79; 8:45 am]

BILLING CODE 6715-01-M

DEPARTMENT OF TREASURY

Comptroller of the Currency

12 CFR Part 12

Recordkeeping and Confirmation Requirements for Certain Transactions Effected by National Banks

AGENCY: Comptroller of the Currency.

ACTION: Final rule.

SUMMARY: The Comptroller of the Currency, on July 24, 1979, adopted 12 CFR Part 12 ("Part 12") which requires that national banks that effect certain securities transactions for customers provide confirmation of and maintain records with respect to such transactions. The provisions of Part 12 are effective as of January 1, 1980. Similar regulations were adopted by the Board of Governors of the Federal Reserve System and the Federal Deposit Insurance Corporation. At the time of adoption, the three agencies also requested comment on the confirmation requirements and on the bank officers and employees reporting requirements as they apply to transactions in certain government obligations. Seventeen letters of comment were received. The Comptroller has considered the comments and is amending the regulation to limit the applicability of recordkeeping requirements, internal policies, and officer and employee reporting relating to government securities. Other minor amendments are also being made.

EFFECTIVE DATE: January 1, 1980.

FOR FURTHER INFORMATION CONTACT: Dean E. Miller, Deputy Comptroller for Specialized Examinations, Office of the Comptroller of the Currency, Washington, D.C. 20219. (202–447–1731).

SUPPLEMENTARY INFORMATION: The Comptroller of the Currency on July 24, 1979, adopted 12 CFR Part 12 ("Part 12") (44 FR 43252). Part 12 requires national banks to establish uniform procedures and records relating to the handling of securities transactions for certain accounts. The provisions of Part 12 are effective as of January 1, 1980. Any national bank that effects securities transactions for customers is required to maintain specified records and furnish confirmations of transactions to customers. Similar regulations have been adopted by the Board of Governors of the Federal Reserve System and the Federal Deposit Insurance Corporation. At the time of adoption, the three agencies also requested comment on the confirmation requirements and on the bank officers and employees reporting requirements as they apply to transactions in certain government obligations.

Although comment was solicited only with respect to the confirmation requirements as they apply to transactions in U.S. government, federal agency and municipal securities and on the bank officers and employees reporting requirements as they apply to transactions in U.S. government or federal agency obligations, several commentators commented on sections of the regulation which had been adopted previously in final form. The Comptroller found some of the comments to have merit and has amended certain previously adopted sections in response to these comments.

The following is a summary of the revisions hereby made with respect to the subjects upon which comment was solicited and with respect to other sections upon which comment was received. Subjects raised upon which no change was made are also discussed.

1. Section 12.5(c) requires a national bank which exercises investment discretion for an account in an agency capacity to furnish an itemized statement at least once every three months or upon request of the customer to furnish individual transaction confirmations within an alternative time. In response to a comment, Section 12.5(c)(2) has been amended to state that a bank may charge accounts over which it exercises investment discretion in an agency capacity for confirmations made on a per transaction basis. This change merely reflects the Comptroller's prior intent that banks could charge for furnishing individual confirmations in agency accounts where the bank exercises investment discretion.

2. Two banks commented that Section 12.5(c) should be amended to permit the bank and its customers to agree to a different arrangement than the quarterly statement which is required. The Comptroller has decided that the quarterly requirement is desirable and is not so unduly burdensome as to justify permitting less frequent notificaitons. It is noted that this requirement is comparable to the reporting system required of non-bank investment advisors.

3. Section 12.5(a) allows a bank and a customer of a nondiscretionary agency account to agree in writing to a different arrangement of notification than set forth in Section 12.5. One commentator

stated his understanding that the intent of the banking agencies in drafting Section 12.5(a) was to permit a bank and an agency account customer to agree on a suitable alterantive reporting system. The commentator noted that the placement of this authority under the "Time of Notification," Section 12.5, might be interpreted as a grant of authority for customer and bank to agree to a different time of notification, but not to a different form of notification. This was not the Comptroller's intent when adopting the regulation; however, the Comptroller does not object to a different form of notification. Accordingly, Section 12.5(a) has been amended to clarify that a bank and its agency customers may mutually agree upon alternative forms of notification. The Comptroller advises national banks that any such alternative form of notification for non-discretionary agency accounts must be affirmatively approved by the customer. A national bank will not be considered to be in compliance with this Section if it interprets a customer's non-response to a bank communication as constituting customer approval.

4. Subparagraph (d) of Section 12.6, Securities trading policies and procedures, requires that bank officers and employees who make or participate in making investment recommendations or who, in connection with their duties, obtain certain information, report to the bank on a quarterly basis all securities transactions made by them or on their behalf or in which they have a beneficial interest. Several commentators suggested changes to various parts of Section 12.6(d). Many commentators suggested that bank officers and employees who purchase U.S. government and federal agency securities should not have to report transactions in those securities. One commentator noted that "Since the purpose of the disclosure is to detect misuse of inside information and manipulation of the market, and since such activity seems particularly unlikely in the marketplace for government securities, we feel that these securities should be excepted from the disclosure requirements." The Comptroller has concluded that the benefit that would result from requiring disclosure of transactions in U.S. government and federal agency securities is outweighed by the increased reporting burden. The rule as amended exempts transactions in U.S. government and federal agency securities from the reporting requirements applicable to bank officers and employees, and also exempts bank officers and employees whose duties do not involve knowledge of or transactions in securities other than U.S. governments and federal agency obligations.

5. Section 12.7(a) exempts banks from certain recordkeeping requirements if the bank has an average of less than 200 securities transactions per year for customers over the prior three calendar year period. The comment letters pointed out the importance of transactions in U.S. government and federal agency securities in determining the scope of the 200 securities transactions exemption. One commentator noted that by including transactions in U.S. government and federal agency securities in the 200 securities transactions per year, the exemption is not as helpful in relieving the recordkeeping requirements as it may appear. The Comptroller has concluded that the intended purpose of the 200 securities transactions exemption can best be accomplished by excluding transactions in U.S. government and federal agency securities from the securities transactions which are to be counted for purposes of the 200 securities transactions exemption and has accordingly amended Section 12.7(a).

6. A related comment noted that the requirements of Sections 12.6(a) through 12.6(c), which require written supervisory policies and procedures relating to supervision of officers and employees, fair and equitable allocation of securities and fair and equitable crossing or orders could be triggered by performance of a single customer accommodation transaction. The 200 securities transactions exemption set forth in Section 12.7(a) has now been modified to exempt banks coming within the exemption from the policy and procedures requirements of Sections 12.6(a) through 12.6(c).

7. Section 12.4, Form of Notification, requires that bank furnish a written confirmation for transactions in U.S. government securities (other than U.S. Savings Bonds), federal agency obligations and municipal securities (where the bank is not already required to comply with the rules of the Municipal Securities Rulemaking Board). The Comptroller received a few adverse comments concerning the burden imposed by extension of confirmation requirements to transactions in U.S. government and federal agency securities. After consideration of these comments, the Comptroller has determined that application of the confirmation requirements to transactions in U.S. government and federal agency securities is necessary to provide customers with appropriate disclosure. Accordingly, no change has been made in these requirements as adopted previously.

8. Comments were received as to the possible inapplicability of some of the requirements of Section 12.3, Recordkeeping, to U.S. government and federal agency obligations. For example, the requirement of time stamping was raised, and the need for disclosure of the name of the broker where the bank is a dealer (and not acting as agent) and is selling the security to the customer. In both cases the Comptroller is of the opinion that the regulation should be followed, to permit supervision and examination of the functions and provide appropriate disclosure to the customer.

9. For the purpose of Part 12, the term "security" is defined to mean any interest or instrument commonly known as a security, whether in the nature of debt or equity, including any stock, bond, note, debenture, evidence of indebtedness or any participation in the right to subscribe to or purchase any of the foregoing. One commentator requested that shares of money market mutual funds be excluded from the definition of security pointing out that the regulation excludes from its definition alternative sources of temporary investment of fiduciary funds which are in themselves usually included in the portfolio of money market mutual funds, such as certificates of deposit, variable amount master notes and short-term Treasury bills. The Comptroller is of the opinion that the fact that a money market mutual fund involves the intervention of another manager than the bank deciding the mix of these investments renders desirable the disclosure and recordkeeping requirements of the regulation. It is noted that the regulation permits the use of a single order for multiple account transactions, which should reduce the potential costs of recordkeeping. Furthermore, the comptroller noted that transactions in money market fund shares derive primarily from accounts over which the banks exercise investment discretion and therefore are not required to be confirmed on an individual basis except upon customer request (Section 12.5(b) and Section 12.5(c)).

10. A question was raised with regard to the applicability of Part 12 to employee benefit accounts for which a national bank acts as Investment Manager, as defined in Section 3(38) of the Employees Retirement Income Security Act of 1974, with another entity acting as trustee and/or custodian of the

assets. The Investment Manager concept permits one bank to be sole trustee of a pension plan ("Master Trustee"), rendering to the plan sponsor uniform accounting reports including cash statements and valuation statements, while accepting investment direction as to specified parts of the pension plan assets from Investment Managers (another bank, an insurance company, or a registered investment advisor).

In the case of a Master Trust the requirements of the regulation will be served if either the Master Trustee or the Investment Manager maintains the specified records and gives prescribed statements and confirmations in accordance with the requirements of Part 12. Any national bank serving either as Master Trustee or Investment manager should ensure that the requirements of the regulation are being met, either through performing the functions required by the regulation itself or contracting with another party that that party should do so.

DRAFTING INFORMATION: The principal drafter of this ruling is Ralph Janvey, Staff Attorney, Office of the Comptroller of the Currency, Washington, D.C. 20219.

Authority: 12 U.S.C. 24 and 12 U.S.C. 92a.

Adoption of Amendment. Accordingly, the Comptroller amends 12 CFR Part 12 as set forth below.

PART 12—RECORDKEEPING AND CONFIRMATION REQUIREMENTS FOR SECURITIES TRANSACTIONS

1. Section 12.5 is amended by revising paragraphs (a) and (c) to read as follows:

* * * * *

§ 12.5 Time of notification.

The time for mailing or otherwise furnishing the written notification described in 12 CFR 12.4 shall be five business days from the date of the transaction, or if a broker/dealer is utilized, within five business days from the receipt by the bank of the broker/dealer's confirmation, but the bank may elect to use the following alternative procedures if the transaction is effected for:

(a) Accounts (except periodic plans) where the bank does not exercise investment discretion and the bank and the customer agree in writing to a different arrangement as to the time and content of the notification; provided, however, that such agreement makes clear the customer's right to receive the written notification within the prescribed time period at no additional cost to the customer;

* * * * *

(c) Accounts where the bank exercises investment discretion in an agency capacity, in which instance (1) the bank shall mail or otherwise furnish to each customer not less frequently than once every three months an itemized statement which shall specify the funds and securities in the custody or possession of the bank at the end of such period and all debits, credits and transactions in the customer's account during such period, and (2) if requested by the customer, the bank shall mail or otherwise furnish to each such customer within a reasonable time the written notification described in 12 CFR 12.4. The bank may charge a reasonable fee for providing the information described in 12 CFR 12.4;

* * * * *

2. Paragraph (d) of § 12.6 is revised.

§ 12.6 Securities trading policies and procedures.

Every national bank effecting securities transactions for customers shall establish written policies and procedures providing:

* * * * *

(d) That bank officers and employees who make investment recommendations or decisions for the accounts of customers, who participate in the determination of such recommendations or decisions, or who, in connection with their duties, obtain information concerning which securities are being purchased or sold or recommended for such action, must report to the bank, within ten days after the end of the calendar quarter, all transactions in securities made by them or on their behalf, either at the bank or elsewhere in which they have a beneficial interest. The report shall identify the securities purchased or sold and indicate the dates of the transactions and whether the transactions were purchases or sales. Excluded from this requirement are transactions for the benefit of the officer or employee over which the officer or employee has no direct or indirect influence or control, transactions in mutual fund shares or U.S. government or federal agency obligations, and all transactions involving in the aggregate $10,000 or less during the calendar quarter.

3. Paragraph (a) of § 12.7 is revised.

§ 12.7 Exceptions.

The following exceptions to this Part shall apply:

(a) The requirements of 12 CFR 12.3(b) through 12 CFR 12.3(d) and 12 CFR 12.6(a) through 12 CFR 12.6(c) shall not apply to banks having an average of less than 200 securities transactions per year for customers over the prior three calendar year period, exclusive of transactions in U.S. government and federal agency obligations.

* * * * *

Dated: December 21, 1979.

John G. Heimann,

Comptroller of the Currency.

[FR Doc. 79-39249 Filed 12-28-79; 8:45 am]

BILLING CODE 4810-33-M

FEDERAL RESERVE SYSTEM

12 CFR Part 226

[Reg. Z; Docket No. R-0239]

Truth in Lending; Calculation and Disclosure of Annual Percentage Rates

AGENCY: Board of Governors of the Federal Reserve System.

ACTION: Final rule.

SUMMARY: The Board is adopting revisions in the requirements of Regulation Z, Truth in Lending, with regard to the calculation and disclosure of the annual percentage rate and other credit terms. The most important changes are: (1) adoption of a tolerance of ⅛ of 1 percentage point in either direction from the exact annual percentage rate, in place of the existing rounding rule; (2) adoption of simplified rules for treating minor payment schedule variations; and (3) expansion of the protection available to creditors who have relied in good faith on faulty calculation tools. The revisions, which are set forth below, include amendments to §§ 226.5 and 226.8 of the regulation, deletion of several Board Interpretations, and expansion of Supplement I to Regulation Z. The issues addressed were the subject of a prior proposal published by the Board (44 FR 45141, August 1, 1979).

EFFECTIVE DATE: January 10, 1980, but compliance optional until October 1, 1980.

FOR FURTHER INFORMATION CONTACT: Regarding the regulation: Dolores S. Smith, Section Chief (202-452-2412), Ellen Maland, Attorney (202-452-3867), or Margaret Stewart, Attorney (202-452-2412), Division of Consumer and Community Affairs, Board of Governors of the Federal Reserve System, Washington, D.C. 20551. Regarding the economic impact analysis: Thomas A. Durkin, Economist (202-452-2503), Division of Research and Statistics, Board of Governors of the Federal Reserve System, Washington, D.C. 20551.

SUPPLEMENTARY INFORMATION: (1) Introduction. In January 1979, the

Board's staff undertook an extensive review of the provisions of Regulation Z relating to calculation and disclosure of the annual percentage rate. This rate expresses in percentage terms the cost of a consumer credit transaction. Because of its usefulness as a tool for comparing various credit sources, this term is considered to be the most important disclosure required by the Truth in Lending Act. The Act directs the Board, as part of its rulemaking responsibilities, to prescribe rules for calculating and disclosing this rate.

The review focused primarily on the variety of special rules in the regulation regarding annual percentage rate determination and the absence of specific guidance in certain areas. The study was prompted by adoption in January 1979 of uniform guidelines for the enforcement of Regulation Z (44 FR 1222, January 4, 1979), efforts by Congress and the Board to simplify the requirements of the Act and Regulation Z, and the Board's Regulatory Improvement Project.

The proposal published by the Board last January (44 FR 1116, January 4, 1979) described five areas in which the Board believed clarification or further guidance was necessary, together with alternative ways of dealing with the issues raised. Based on the more than 300 comments received in response to this publication, the Board in August 1979 (44 FR 45141, August 1, 1979), published specific regulatory changes which it proposed to make regarding these issues. The August publication proposed amendments to §§ 226.5 and 226.8 of the regulation, revision of the Board's Supplement I (the rules for determination of the annual percentage rate), and revision of Volume I of the Board's Annual Percentage Rate Tables.

Approximately 235 commenters responded to the August proposal. The great majority of comments were from banks and other financial institutions. Based on these comments and the Board staff's analysis, the Board now adopts amendments to §§ 226.5 and 226.8, together with revisions to Supplement I to Regulation Z. These changes are discussed below. The Board has decided not to make the proposed changes to Volume I of the Board's Annual Percentage Rate Tables.

In order to assist creditors in adapting to the requirements of the regulation as amended, the Board will not require them to comply with the revised regulation until October 1, 1980. However, the Board notes that many of the revisions, such as the ⅛ of 1 percentage point tolerance, provide creditors with greater protection than is available to them under the existing regulation. Therefore, the Board has determined that the revised provisions should be effective concurrently with the existing regulation until October 1, 1980. Creditors who have the capability and who wish to comply with the revisions before that time may do so, while creditors who require a longer period of adjustment may continue to operate under the existing rules in the interim. After October 1, 1980, all creditors will be required to comply with the new rules.

Set forth below is a discussion of the changes to be made and the economic impact of the changes, followed by the text of the amendments to §§ 226.5 and 226.8, and the revised Supplement I to Regulation Z.

(2) Regulatory Provisions. *Tolerance.* Section 226.5(b)(1) sets forth the general standard of accuracy for calculation and disclosure of the annual percentage rate in closed end credit transactions. An annual percentage rate will be considered accurate, subject to the exceptions discussed below, if it is within ⅛ of 1 percentage point above or below the exact annual percentage rate. Currently, the annual percentage rate must be disclosed either as an exact rate or rounded to the nearest ¼ of 1 percentage point.

The Board notes that the ⅛ of 1 percentage point tolerance is in accord with the Truth in Lending amendments now being considered by Congress and that a large majority of the commenters addressing this issue supported such a tolerance. The comments indicated no basis for applying different tolerance rules depending on such factors as length of the transaction or type of credit extended. Therefore, the tolerance will be available, as a general rule, without regard to any distinguishing factors.

The regulation continues to recognize both the actuarial method and the United States Rule method in calculation of the annual percentage rate. Under the actuarial method, the unpaid balance of the obligation is increased by the finance charge earned during each unit-period (or fractional unit-period), and decreased by any payments made at the end of that period. Under the United States Rule method, which is used by many credit unions, any earned, unpaid finance charge is not added to the unpaid balance of the obligation, but is accumulated separately until such time as payments are sufficient to pay the earned unpaid finance charge. A second characteristic distinguishing this method from the actuarial method is that no interest calculation is made until a payment is received.

In application of the ⅛ of 1 percentage point tolerance, the accuracy of the disclosed annual percentage rate will be judged in accordance with whichever of these two methods was used in calculating the disclosed rate. In transactions involving equal payments and equal periods, either method will produce the same annual percentage rate. In irregular transactions, however, there may be slight variations in the annual percentage rate.

Supplement I. Supplement I to Regulation Z, which was first adopted 10 years ago, sets forth equations and instructions for determining the exact annual percentage rate. This material, which is incorporated by reference in the regulation, is not intended for day-to-day use by creditors in their lending operations. Rather, it is used by manufacturers of calculation tools in producing and verifying their products. These products are in turn used by a great majority of creditors; in this sense, the supplement provides a standard of accuracy for the credit industry.

In its August proposal, the Board suggested revising Supplement I to expand the number and variety of examples, to include explanations and equations for determining the annual percentage rate in accordance with the United States Rule as well as the actuarial method, and to provide further guidance on determination of unit-periods and fractional unit-periods.

With the exception of the material relating to the United States Rule, the revisions proposed in Supplement I have been adopted by the Board. The material relating to the United States Rule has not been adopted because the comments and other information available to the Board indicated that there is no compelling need for this material. In view of the apparent lack of necessity for such an expansion, the Board has determined that Supplement I should continue to be based solely on the actuarial method. As indicated above, however, the supplement has been expanded to provide further examples and more specificity regarding the determination of unit-periods and fractional unit-periods. The existing Supplement I permits fractional unit-periods in the denominator for the actuarial method equation to be expressed in either a linear or an exponential form. In order to provide a more uniform standard, the new supplement requires the use of the linear form, which is widely used in the credit industry.

Board tables and other tools. Section 226.5(b)(2)(i) describes Volumes I and II of the Annual Percentage Rate Tables. This material provides creditors with a

readily-usable calculation tool applying the technical information contained in Supplement I. An annual percentage rate computed in accordance with the instructions in the tables is deemed to comply with the regulation, even in those cases where its use may produce an annual percentage rate that falls outside the general rule on accuracy. Volume I, the more commonly-used of the tables, applies to credit transactions involving equal payment amounts and periods, as well as to transactions with an odd first payment, odd first period, or odd final payment.

In its August proposal, the Board had suggested revising Volume I by expanding the explanatory material regarding its use, amending the adjustments needed to accommodate certain irregularities, and reprinting the factor tables in ⅛ of 1 percentage point rather than ¼ of 1 percentage point increments. The Board has now determined that the proposed changes are not warranted. In making this decision, the Board was particularly mindful of the possible difficulties creditors would experience in adjusting to the new material, as compared to the relatively slight increase in accuracy produced by the revisions. The Board also notes that this volume has been widely distributed throughout the credit industry in the last 10 years, compounding the difficulty of disseminating new material.

Section 226.5(b)(2)(ii) authorizes the use of any other computation tool, including charts, tables, computers and calculators, which produces the same degree of accuracy as called for by § 226.5(b)(1).

Single add-on rate. Section 226.5(b)(3) permits creditors assessing finance charges in a certain manner to disclose an annual percentage rate which may not meet the general accuracy requirements of the regulation. Where a single add-on rate is applied to all transactions up to 60 months in length, the creditor may disclose for all those transactions the single highest annual percentage rate. For example, an add-on rate of $10 per $100 per year would produce the following annual percentage rates at various maturities: at 3 months, 14.9%; at 21 months, 18.18%; and at 60 months, 17.27%. Under this provision, the creditor may disclose for all transactions up to 60 months an annual percentage rate of 18.18% (the highest annual percentage rate). This provision reflects the current Board Interpretation § 226.502. In its August proposal, the Board had suggested limiting this special rule to transactions with maturities greater than 9 months since short-term transactions produce the greatest degree of overstatement. As an alternative, the Board also requested comment on whether the rule could be eliminated entirely.

The available evidence indicates that the present rule may still be necessary for certain creditors, for short-term transactions as well as those over 9 months in length. Therefore, the Board is retaining the current rule enunciated in Interpretation § 226.502. For organizational purposes, however, the Board is eliminating the interpretation and placing this special rule in the body of the regulation itself, as reflected in § 226.5(b)(3). The Board emphasizes that this provision continues to be available only in transactions which are payable in equal installments at equal intervals.

Range of balances. Section 226.5(b)(4), like the preceding paragraph, represents an exception to the general rule on accuracy of disclosed rates, for creditors assessing finance charges by a certain method. This special rule is currently reflected in § 226.5(c)(2)(iv). Under this rule, creditors applying a single finance charge to all balances within a specified range may understate the annual percentage rate by up to 8% of the actual rate for the lowest balance, by disclosing for all balances within that range the annual percentage rate computed on the median balance. That is, if a finance charge of $9 applies to all balances between $91 and $100, an annual percentage rate of 10% (the rate on the median balance) may be disclosed as the annual percentage rate for all balances, even though a $9 finance charge applied to the lowest balance ($91) would actually produce an annual percentage rate of 10.7%.

In its August publication, the Board had proposed two alternatives: (1) limit the special rule to transactions involving orders by mail or telephone, or (2) eliminate the special provision entirely. The available evidence indicates that a need may continue to exist for this provision, but only with respect to the preliminary disclosures made on series of sales agreements and orders by mail or telephone. Therefore, the Board is limiting § 226.5(b)(4) to annual percentage rates disclosed pursuant to §§ 226.8(g) (1) and (2) and 226.8(h)(1).

Minor irregularities—annual percentage rate.—The Board is adopting two provisions, §§ 226.5(b)(5) and 226.8(r), that deal with the impact of minor payment schedule irregularities on the annual percentage rate, finance charge and other disclosures. A common irregularity is an initial payment period that is longer or shorter than the other periods; another involves one payment that differs in amount from the other payments.

The new § 226.5(b)(5) states that, for purposes of computing an annual percentage rate, the irregularity of an initial payment period may be disregarded if it is within a specified number of days longer or shorter than a regular period. Since first period irregularities have a greater impact on the rate in short-term than in long-term transactions, the provision makes distinctions based on the length of the term. The degree of first period irregularity that may be ignored under the new provision is shown in the following table:

For a term of the transaction of.	Up to 1 yr.	At least 1 yr. Less than 10 yrs.	10 yrs. and over.
The first period may be treated as regular if it differs from regular by up to this many days.	6 shorter, 13 longer.	11 shorter, 21 longer.	Any number shorter, 32 longer.

In addition, any payment irregularity that results from an irregularity in the first period within these specified ranges could also be disregarded.

This new provision replaces the minor irregularities provisions in the existing § 226.5(d) of the regulation and Board Interpretation § 226.503. It provides a similar approach in defining which irregularities in the first period may be disregarded by comparing the number of days in the irregular period to the number of days in a regular period. The new rules are simpler to apply, however, since they make no distinctions based on the length of the unit-period. Elimination of that distinction appears justified since the effect of first period variations on the annual percentage rate is more closely related to the term of the transaction than to the unit-period's length; furthermore, dropping the distinction permits a simpler and more understandable rule for determining which irregularities may be disregarded. The ranges of irregularities specified are basically those that have been applicable to transactions payable monthly under the existing rules. This choice was made because a month is the most common unit-period and because those ranges are the most generous.

The new provision also differs from the existing version in its treatment of variations in payment amounts. The existing rule requires that the irregular payment be measured against the regular payment to see if it falls within 25% or 50% (depending on the transaction's term) of the regular payment. If it met that test, it could be disregarded. The new rule simply states

that any payment irregularity that *results from* a first period irregularity within the specified ranges may be ignored. By describing the variation in payment amount in terms of its cause, the most common minor irregularity will be taken care of, while the need to independently measure the irregular payment is eliminated.

In its August proposal, the Board had offered three alternative ways of dealing with the effect on the annual percentage rate of payment schedule irregularities. The most stringest of the alternatives was to eliminate the minor irregularities provisions and require all creditors to disclose a rate meeting the general standard of accuracy of ⅛ of 1 percentage point. There was relatively little support for this approach among the commenters. The second alternative suggested was to continue the approach currently taken and simply improve the regulatory language. This alternative received the greatest support from the commenters. The third option was to replace the existing provision with one permitting a larger degree of overstatement (but a smaller degree of understatement) where an initial payment or payment period is irregular.

The board has chosen the second of the three alternatives by adopting a provision that provides essentially the same protections now available to creditors computing an annual percentage rate, while simplifying the determination of which irregularities fall within the specified ranges.

Minor irregularities—finance charge. The new § 226.8(r) provides a similar minor irregularities provision for purposes of computing and disclosing the finance charge and the schedule of payments. It is parallel to the annual percentage rate provision discussed above, new § 226.5(b)(5), in that it defines in the same way the first period irregularities that may be disregarded. It differs from both Board Interpretation § 226.505 (which it replaces) and the new § 226.5(b)(5), however, in that it permits disregarding only variations in the *final* payment that result from first period irregularities. The Board believes that this limitation is warranted, on the grounds that adjustments made in other ways do not require this special treatment. If an adjustment is made to the first payment to account for an irregular first period (for example, where a first payment due January 1 on a mortgage loan made on November 20 is increased to pay the extra 10 days' interest) or where the charge for the odd first period is spread out among all the payments, it is a simple matter to reflect the adjustments when disclosing the finance charge and the payment schedule.

The minor irregularities protection is needed, however, when the adjustment for an irregular first period is made at the end of the transaction. For example, a credit union making a loan on November 20 with the first payment due January 1 will frequently collect payments that are determined as if there were a regular first period, but will accrue interest based on the actual time the principal is outstanding and will adjust the final payment to account for the effect of the long first period. The new § 226.8(r) permits the credit union to disregard the effect of such a practice in disclosing the finance charge and payment schedule.

This provision differs from the one proposed in August in several ways. Its applicability is not limited to certain so-called simple interest obligations. Furthermore, it permits less overstatement (resulting from long first periods), while countenancing some degree of understatement (resulting from short first periods). The comments suggested that long first periods are far more common than short ones and that the minor irregularities provision should be expanded to cover them. In addition, the provision adopted has the advantage of providing parallel rules for defining period irregularities for purposes of both annual percentage rate and finance charge computation.

It should be noted in connection with both of the minor irregularities provisions that creditors are always free to arrange payment schedules with irregularities that fall outside the categories defined in those provisions. In such cases, a creditor has two choices: it can take specific account of the effect such irregularities have on the disclosures; alternatively, in the case of the annual percentage rate, it can ignore the irregularity provided the disclosed rate is not more than ⅛ of 1 percentage point from the true rate.

Certain creditor practices. The new § 226.8(s) states that, when making calculations and disclosures, creditors may ignore the effect of certain facts or practices, namely, collecting of payments in whole cents, changing dates of payments and advances when the scheduled date falls on a weekend or holiday, and the fact that months have different numbers of days. These things have very slight effects on disclosures and the Board believes the negligible benefit to consumers of taking account of such matters does not justify the burden of doing so.

This provision differs from the August proposal in that the authorization to treat all months as equal is not restricted to simple interest creditors, and the requirement to mark as an estimate the finance charge disclosed in reliance on such a provision has been deleted.

Faulty calculation tools. Section 226.5(c) represents an extension of the existing § 226.5(c)(3). Under the latter provision, an annual percentage rate or finance charge error that results from an error in the chart or table used by the creditor does not violate Regulation Z. The Board proposed in its August publication to extend this provision to errors resulting from the use of faulty calculators and computers, or, in the alternative, to eliminate the provision entirely. The first alternative—extension of the protection to all types of calculation tools—would not have extended to the software or programming elements of electronic calculation tools. This proposal was suggested in an effort to limit the protection of the rule to errors beyond the creditor's control and to alleviate possible enforcement difficulties in confirming errors in software.

The comments received by the Board on this issue clearly supported the extension of the provision to all calculation tools, including software elements of calculators and computers. The Board believes that this protection should be made available for all calculation tools, without regard to type, and new § 226.5(c), set forth below, reflects this decision. In the Board's view, the vast majority of creditors do not possess the specialized technical knowledge necessary to evaluate calculation tools internally and must continue to rely on the producers of those tools to provide that knowledge.

The inaccuracies which may be countenanced by this provision will, in the Board's view, be offset by the restrictions imposed on the availability of the protection. First, the creditor's reliance on the tool must be in good faith. This imposes on the creditor a reasonable degree of responsibility for assuring that the tool in question provides the degree of accuracy required by the regulation. For example, the creditor might verify the results obtained by use of the tool by comparing those results to the figures obtained by use of another calculation tool. The creditor might also reasonably rely on the expertise of the enforcement agency in making such a determination.

Second, any creditor with reason to believe that the tool is in fact inaccurate must promptly discontinue use of that tool and notify the Federal Reserve Board of the error. That is, a creditor who was aware of the error and continued to use the tool for disclosure

purposes would no longer have the protection of § 226.5(c) as to inaccurate disclosures made after that time. The Board imposes no specific requirement on creditors with regard to the information contained in the notification to the Board. However, the description of the tool in question must be specific enough to identify the tool. The Board envisions that the notification would normally include the name of the manufacturer or producer of the tool, a trade name, or a model name or number. In describing the error, the creditor need not identify the specific source of the error, as for example by determining the steps in a calculator program which produced the inaccurate results. While the creditor is encouraged to include its opinion regarding the source of the error, a description of the erroneous results and the transactions to which they relate would be sufficient for purposes of this requirement.

Open end credit. Section 226.5(a), relating to the determination of the annual percentage rate in open end credit, has been retained in its present form except for the addition of the ⅛ of 1 percentage point tolerance. Thus, an annual percentage rate calculated and disclosed pursuant to § 226.5(a) would be subject to the same standard of accuracy as that set forth for closed end credit transactions. The Board staff's analysis, together with the comments, indicates no basis for making any other changes in the provisions of § 226.5(a) at this time.

Effective date. In accordance with 5 U.S.C. 553(d)(1) and (3), the Board has determined that the effective date of these amendments need not be delayed 30 days, but may be issued effective immediately since these amendments for the most part are less restrictive than the provisions that they replace. In addition, compliance with the amendments is not required until 9 months have elapsed, thus providing persons subject to these provisions sufficient time to analyze their procedures and tools in light of the changes made and adjust to the new requirements. Although mandatory compliance is not immediately required, the Board has determined that both the new and existing provisions shall be in effect concurrently during the 9-month interim period so that creditors wishing and able to take advantage of the new provisions at this time may do so.

(3) Economic Impact Analysis. According to § 102 of the Act, Truth in Lending was intended "to assure a meaningful disclosure of credit terms so that the consumer will be able to compare more readily the various credit terms available to him and avoid the uninformed use of credit. . . ." However, in the 10 years since the effective date of the Act, the complexity of the Act and its implementing regulation has presented serious compliance difficulties. Despite indications that most financial institutions have made good-faith attempts to comply with Regulation Z, technical violations are common. In its *Annual Report on Truth in Lending for the Year 1978,* the Board reported that more than four-fifths of the banks and almost three-fifths of the credit unions examined that year by the Federal regulatory agencies were found not to be in complete compliance with Regulation Z. This *Annual Report* indicated, though, that "for both kinds of institutions most violations were nonsubstantive." (See p. 11, *Annual Report for 1978.*) Nonsubstantive violations include such things as errors that might arise on account of misunderstanding the regulation, clerical errors, carelessness, and oversights that do not materially affect the accuracy of the most important disclosures. The difficulties of complying in good faith with a complex law and regulation, along with indications that not all current provisions of Truth in Lending are helpful to consumers in shopping for credit, have prompted Congressional calls for Truth in Lending simplification.

Earlier this year, as part of its own efforts to simplify its regulations, the Board requested public comment on certain relatively technical issues concerning methods of calculating and disclosing annual percentage rates and finance charges under Regulation Z (44 FR 1116, January 4, 1979, and 44 FR 45141, August 1, 1979). Each of the changes resulting from this review appears to be consistent with the goal of simplifying the regulation. In general, the amendments should increase somewhat the levels of technical compliance with the regulation without requiring creditors to make costly adjustments in their operations. Also, although technical compliance is made somewhat easier, it is done without sacrificing important consumer protections.

The first major amendment concerns the degree of tolerance allowed in disclosures of annual percentage rates which would comply with Regulation Z. Existing § 226.5(b) of Regulation Z requires, as a general rule, that the annual percentage rate disclosed be either the precise rate or the precise rate rounded to the nearest ¼ of 1 percentage point. Apparently some creditors have interpreted this provision to be a true tolerance, which it is not. The amendment will permit a fixed tolerance of ±⅛ of 1 percentage point on all transactions, which is the tolerance proposed in the Truth in Lending Simplification Act that has passed the Senate. The amendment will have the effect of bringing into compliance some transactions which are, technically, not in compliance because of misconceptions about or errors in using the rounding rule. Consumer protections should not be sacrificed because the tolerance allowed to aid compliance is relatively narrow. At present, there is no available evidence that consumers make credit decisions on the basis of variations in annual percentage rates as small as ⅛ of 1 percentage point. In terms of dollars and cents, a tolerance of ⅛ of 1 percentage point is about 7 cents per $100 financed on 12-month loans and about 22 cents per $100 on 36-month loans. On larger, longer-term loans like mortgages where ⅛ of 1 percentage point may be more significant in absolute dollar terms, it is still a small proportion of the annual percentage rate at current market levels.

The second major amendment concerns the part of Regulation Z known as the minor irregularities rule. A relatively narrow tolerance, such as the tolerance resulting from either the ⅛ of 1 percentage point rule or the rule of rounding to the nearest ¼ of 1 percentage point, may not be sufficient to ease certain compliance problems in cases involving irregular payments. Creditors often arrange, mostly for the convenience of their customers, payment patterns which allow minor irregularities in the schedule of payments. A common example is an abnormally long first period so that monthly payments can be due on the customer's payday. The problem is that on loans with relatively short maturities a long (or short) first payment or other irregularity may cause the true annual percentage rate to deviate from the disclosed rate by more than the allowed tolerance. The result is an added burden for creditors attempting to comply with the regulation in good faith but also trying to satisfy the payment period desires of their customers. For this reason Regulation Z allows, in effect, wider tolerances for certain variations in payment amounts and patterns that fall within the minor irregularities provisions.

The existing minor irregularities rule is complex. It allows a payment to be classified as regular for purposes of computing an annual percentage rate if it varies in size from regular payments by no more than a certain percentage. It

also permits a first payment period to be treated as regular if it varies from the other periods by no more than a certain number of days. The number of days in first periods that may be counted as regular depends upon the frequency of payment and upon the original maturity of the loan contract. All other payments must be equal in size and be scheduled at equal intervals.

The new minor irregularities provisions appear to be a useful simplification because they achieve the basic purpose of the minor irregularities rule—reducing the compliance burden for creditors attempting to accommodate customers—and it makes the present rule clearer and easier to understand. This approach, together with the tolerance rule, should aid good-faith compliance efforts somewhat, especially for newer or smaller creditors not as familiar with the technicalities of Regulation Z but attempting to comply without the aid of expensive legal advice or calculating equipment. For two reasons it does not seem that understatement or overstatement of the annual percentage rate disclosed as a result of the minor irregularities rule is harmful to consumers. First, if a long first period or a smaller first payment is counted as regular under the minor irregularities rule, to the extent that the disclosed rate varies from the exact annual percentage rate, the exact rate will be lower. Since a long first period is probably the most frequent minor irregularity, consumers generally will not be burdened with annual percentage rates higher than those disclosed. Second, minor irregularities in the first period are often arranged for the convenience of consumers *after* the essentials of the credit offer are accepted. As a result, variations in annual percentage rates resulting from minor irregularities in such cases are not likely to be very useful in credit shopping.

The third major provision concerns extending to users of calculating equipment the existing protection from liability provided to creditors relying in good faith on faulty charts or tables. In many cases the sophistication of the technical skills needed to evaluate the performance of these tools requires creditors to rely on the assurances of manufacturers. On occasion, minor errors beyond their control could subject creditors to major litigation costs and civil penalties. Although the ⅛ of 1 percentage point tolerance may obviate the need for protection from some minor errors, protection for a creditor using calculating devices and computers in good faith appears reasonable. Consumer's interests should be protected by the fact that conscious errors or continued use of devices known to produce erroneous results would subject creditors to the penalties of Truth in Lending, as with any other violation. Furthermore, protection for creditors using calculating devices and computers in good faith should facilitate the adoption of improved calculating equipment.

(4) Text of Amendments. In consideration of the foregoing and pursuant to the authority granted in § 105 of the Truth in Lending Act (15 U.S.C. 1604 (1970)), the Board amends Regulation Z (12 C.F.R. Part 226) as follows:

§ 226.5. [Amended]

1. Effective October 1, 1980, existing § 226.5(a) is amended by deleting both the title "General rule—open end credit accounts" and the first sentence beginning "The annual percentage rates for open end credit" and ending "nearest quarter of 1 percent."; §§ 226.5 (b) through (e), Interpretations §§ 226.500, 226.503, and 226.505, and Supplement I to Regulation Z are rescinded.

2. Effective January 10, 1980 § 226.5 is amended by amending paragraph (a) and revising paragraphs (b) and (c) in their entirety. Section 226.8 is amended by adding paragraphs (r) and (s) and Supplement I to Regulation Z, to read as follows:

§ 226.5. Determination of annual percentage rate.

(a) *Open end credit—general rule.* The annual percentage rate is a measure of the cost of credit, expressed as a yearly rate. An annual percentage rate shall be considered accurate if it is not more than ⅛ of 1 percentage point above or below the annual percentage rate determined in accordance with this section.

* * * * *

(b) *Credit other than open end.* (1) *General rule.* The annual percentage rate is a measure of the cost of credit, expressed as a yearly rate, which relates the amount and timing of value received by the consumer to the amount and timing of payments made. The annual percentage rate shall be determined in accordance with either the actuarial method or the United States Rule method and shall be considered accurate if it is not more than ⅛ of 1 percentage point above or below the annual percentage rate determined in accordance with whichever method is used. Explanations, equations and instructions for determining the annual percentage rate is accordance with the actuarial method are set forth in Supplement I, which is incorporated in this Part by reference.

(2) *Computation tools.* (i) The Regulation Z Annual Percentage Rate Tables produced by the Board may be used to determine the annual percentage rate, and any such rate determined from these tables in accordance with the instructions contained therein will comply with the requirements of this section. Volume I of the tables applies to single advance transactions involving up to 480 monthly payments or 104 weekly payments. It may be used for regular transactions, and for transactions with any of the following irregularities: an odd first period, an odd first payment, and an odd final payment. Volume II applies to transactions involving multiple advances and any type of payment or period irregularity.

(ii) Creditors may use any other computation tool in determining the annual percentage rate so long as the annual percentage rate so determined equals the annual percentage rate determined in accordance with Supplemental I, within the degree of accuracy set forth in paragraph (b)(1) of this section.

(iii) Supplement I and Volumes I and II may be obtained from any Federal Reserve Bank or from the Board in Washington, D.C. 20551.

(3) *Single add-on rate transactions.* If a single add-on rate is applied to all transactions with maturities up to 60 months and if all payments are equal in amount and period, a single annual percentage rate may be disclosed for all such transactions, provided that it is the highest annual percentage rate for any such transaction.

(4) *Certain transactions involving ranges of balances.* For purposes of disclosing the annual percentage rate referred to in §§ 226.8(g) (1) and (2) (Orders by mail or telephone) and 226.8(h)(1) (Series of sales), if the same finance charge is imposed on all balances within a specified range of balances, the annual percentage rate computed for the median balance may be disclosed for all of the balances. However, if the annual percentage rate computed for the median balance understates the annual percentage rate computed for the lowest balance by more than 8% of the latter rate, the annual percentage rate shall be computed on whatever lower balance will produce an annual percentage rate which does not result in an understatement of more than 8% of the rate determined on the lowest balance.

(5) *Payment schedule irregularities.* In determining and disclosing the annual

percentage rate, a creditor may disregard an irregularity in the first period [5c] that falls within the limits described below and any payment schedule irregularity that results from the irregular first period:

(i) For transactions in which the term [5c] is less than 1 year: a first period not more than 6 days shorter or 13 days longer than a regular period;

(ii) For transactions in which the term is at least 1 year and less than 10 years: a first period not more than 11 days shorter or 21 days longer than a regular period; or

(iii) For transactions in which the term is at least 10 years: a first period shorter than or not more than 32 days longer than a regular period.

(c) *Errors in calculation tools.* An error in disclosure of the annual percentage rate or finance charge shall not, in itself, be considered a violation of this Part if:

(1) The error resulted from a corresponding error in any calculation tool, such as a chart, table, calculator or computer, used in good faith by the creditor, and

(2) Upon discovery of the error, the creditor promptly

(i) Discontinues use of that calculation tool for disclosure purposes, and

(ii) Notifies the Board in writing of the error in the calculation tool. The notification shall include an identification of the tool and a description of the error, and shall be addressed to the Division of Consumer and Community Affairs, Board of Governors of the Federal Reserve System, Washington, D.C. 20551.

* * * * *

§ 226.8 Credit other than open end—specific disclosure.

* * * * *

(r) *Payment schedule irregularities.* In determining and disclosing the finance charge and the payment schedule under paragraph (b)(3) of this section, a creditor may disregard an irregular final payment or portion of a final payment that results from an irregular first period [13c] within the limits described below and may treat the irregular first period as if it were regular:

(i) For transactions in which the term [13c] is less than 1 year: a first period not more than 6 days shorter or 13 days longer than a regular period;

(ii) For transactions in which the term is at least 1 year and less than 10 years: a first period not more than 11 days shorter or 21 days longer than a regular period; or

(iii) For transactions in which the term is at least 10 years: a first period shorter than or not more than 32 days longer than a regular period.

(s) *Disregarding certain practices.* In making calculations and disclosures, a creditor need not take into account the effects of the following:

(1) The fact that payments are collected in whole cents;

(2) The fact that the dates of payments and advances are changed because the scheduled date falls on a Saturday, Sunday, or holiday; and

(3) The fact that months have different numbers of days.

* * * * *

Supplement I to Regulation Z

Rules for Determining the Annual Percentage Rate for Other than Open End Credit Transactions Pursuant to § 226.5(b) of Regulation Z

I. Introduction

Section 226.5(b) of Regulation Z provides that the annual percentage rate for other than open end credit transactions shall be determined in accordance with either the actuarial method or the United States Rule method. This supplement contains an explanation of the actuarial method as well as equations, instructions and examples of how this method applies to single advance and multiple advance transactions and transactions involving required deposit balances (as defined in § 226.8(e) of the regulation).

Under the actuarial method, at the end of each unit-period (or fractional unit-period) the unpaid balance of the amount financed is increased by the finance charge earned during that period and is decreased by the total payment (if any) made at the end of that period. The determination of unit-periods and fractional unit-periods shall be consistent with the definitions and rules in Sections II (C), (D) and (E) and the general equation in Section II (H).

In contrast, under the United States Rule method, at the end of each payment period, the unpaid balance of the amount financed is increased by the finance charge earned during that payment period and is decreased by the payment made at the end of that payment period. If the payment is less than the finance charge earned, the adjustment of the unpaid balance of the amount financed is postponed until the end of the next payment period. If at that time the sum of the two payments is still less than the total accrued finance charge for the two payment periods, the adjustment of the unpaid balance of the amount financed is postponed still another payment period, and so forth.

II. Instructions and Equations for the Actuarial Method

(A) *General rule.* The annual percentage rate shall be the nominal annual percentage rate determined by multiplying the unit-period rate by the number of unit-periods in a year.

(B) *Term of the transaction.* The term of the transaction begins on the date of its consummation, except that if the finance charge or any portion of it is earned beginning on some other date, the term begins on that other date. The term ends on the date the last payment is due, except that if an advance is scheduled after that date, the term ends on the later date. For computation purposes, the length of the term shall be equal to the time interval between any point in time on the beginning date to the same point in time on the ending date.

(C) *Definitions of time intervals.* (1) A period is the interval of time between advances or between payments and includes the interval of time between the date the finance charge begins to be earned and the date of the first advance thereafter or the date of the first payment thereafter, as applicable.

(2) A common period is any period that occurs more than once in a transaction.

(3) A standard interval of time is a day, week, semimonth, month, or a multiple of a week or a month up to, but not exceeding, 1 year.

(4) All months shall be considered equal. Full months shall be measured from any point in time on a given date of a given month to the same point in time on the same date of another month. If a series of payments (or advances) is scheduled for the last day of each month, months shall be measured from the last day of the given month to the last day of another month. If payments (or advances) are scheduled for the 29th or 30th of each month, the last day of February shall be used when applicable.

(D) *Unit-period.* (1) In all transactions other than a single advance, single payment transaction, the unit-period shall be that common period, not to exceed 1 year, that occurs most frequently in the transaction, except that

(a) If 2 or more common periods occur with equal frequency, the smaller of such common periods shall be the unit-period; or

(b) If there is no common period in the transaction, the unit-period shall be that period which is the average of all periods rounded to the nearest whole standard interval of time. If the average is equally near 2 standard intervals of time, the lower shall be the unit-period.

(2) In a single advance, single payment transaction, the unit-period shall be the term of the transaction, but shall not exceed 1 year.

(E) *Number of unit-periods between 2 given dates.* (1) The number of days between 2 dates shall be the number of 24-hour intervals between any point in time on the first date to the same point in time on the second date.

(2) If the unit-period is a month, the number of full unit-periods between 2 dates shall be the number of months measured back from the later date. The remaining fraction of a unit-period shall be the number of days

[5c] For purposes of this paragraph, the "first period" is the period from the date on which the finance charge begins to be earned to the date of the first payment, and the "term" is the period from the date on which the finance charge begins to be earned to the date of the final payment.

[13c] For purposes of this paragraph, the "first period" is the period from the date on which the finance charge begins to be earned to the date of the first payment, and the "term" is the period from the date on which the finance charge begins to be earned to the date of the final payment.

measured forward from the earlier date to the beginning of the first full unit-period, divided by 30. If the unit-period is a month, there are 12 unit-periods per year.

(3) If the unit-period is a semimonth or a multiple of a month not exceeding 11 months, the number of days between 2 dates shall be 30 times the number of full months measured back from the later date, plus the number of remaining days. The number of full unit-periods and the remaining fraction of a unit-period shall be determined by dividing such number of days by 15 in the case of a semimonthly unit-period or by the appropriate multiple of 30 in the case of a multimonthly unit-period. If the unit-period is a semimonth, the number of unit-periods per year shall be 24. If the number of unit-periods is a multiple of a month, the number of unit-periods per year shall be 12 divided by the number of months per unit-period.

(4) If the unit-period is a day, a week, or a multiple of a week, the number of full unit-periods and the remaining fraction of a unit-period shall be determined by dividing the number of days between the 2 given dates by the number of days per unit-period. If the unit-period is a day, the number of unit-periods per year shall be 365. If the unit-period is a week or a multiple of a week, the number of unit-periods per year shall be 52 divided by the number of weeks per unit-period.

(5) If the unit-period is a year, the number of full unit-periods between 2 dates shall be the number of full years (each equal to 12 months) measured back from the later date. The remaining fraction of a unit-period shall be:

(a) The remaining number of months divided by 12 if the remaining interval is equal to a whole number of months, or

(b) The remaining number of days divided by 365 if the remaining interval is *not* equal to a whole number of months.

(6) In a single advance, single payment transaction in which the term is less than a year and is equal to a whole number of months, the number of unit-periods in the term shall be 1, and the number of unit-periods per year shall be 12 divided by the number of months in the term.

(7) In a single advance, single payment transaction in which the term is less than a year and is *not* equal to a whole number of months, the number of unit-periods in the term shall be 1, and the number of unit-periods per year shall be 365 divided by the number of days in the term.

(F) *Percentage rate for a fraction of a unit-period.* The percentage rate of finance charge for a fraction (less than 1) of a unit-period shall be equal to such fraction multiplied by the percentage rate of finance charge per unit-period.

(G) *Symbols.* The symbols used to express the terms of a transaction in the equation set forth in Section II (H) are defined as follows:

A_k=The amount of the kth advance.

q_k=The number of full unit-periods from the beginning of the term of the transaction to the kth advance.

e_k=The fraction of a unit-period in the time interval from the beginning of the term of the transaction to the kth advance.

m=The number of advances.

P_j=The amount of the jth payment.

t_j=The number of full unit-periods from the beginning of the term of the transaction to the jth payment.

f_j=The fraction of a unit-period in the time interval from the beginning of the term of the transaction to the jth payment.

n=The number of payments.

i=The percentage rate of finance charge per unit-period, expressed as a decimal equivalent.

Symbols used in the examples shown in this supplement are defined as follows:

$$\ddot{a}_{\overline{x}|} = \text{The present value of 1 per unit-period for x unit-periods, first payment due immediately.}$$

$$= 1 + \frac{1}{(1+i)} + \frac{1}{(1+i)^2} + \ldots\ldots\ldots\ldots + \frac{1}{(1+i)^{x-1}}$$

$$w = \text{The number of unit-periods per year.}$$

$$I = wi \times 100 = \text{The nominal annual percentage rate.}$$

(H) *General equation.* The following equation sets forth the relationship among the terms of a transaction:

$$\frac{A_1}{(1+e_1 i)(1+i)^{q_1}} + \frac{A_2}{(1+e_2 i)(1+i)^{q_2}} + \ldots + \frac{A_m}{(1+e_m i)(1+i)^{q_m}} = \frac{P_1}{(1+f_1 i)(1+i)^{t_1}} + \frac{P_2}{(1+f_2 i)(1+i)^{t_2}} + \ldots + \frac{P_n}{(1+f_n i)(1+i)^{t_n}}$$

(I) *Solution of general equation by iteration process.* The general equation in Section II(H), when applied to a simple transaction in which a loan of $1000 is repaid by 36 monthly payments of $33.61 each, takes the special form:

$$A = \frac{33.61\,\ddot{a}_{\overline{36}|}}{(1+i)}$$

Step 1:

Let I_1=estimated annual percentage rate=12.50%

Evaluate expression for A, letting $i=I_1/(100w)$=.010416667

Result (referred to as A')=1004.674391

Step 2:

Let $I_2=I_1+.1$=12.60%

Evaluate expression for A, letting $i=I_2/(100w)$=.010500000

Result (referred to as A'')=1003.235366

Step 3:

Interpolate for I (annual percentage rate):

$$I = I_1 + .1\left[\frac{(A - A')}{(A''-A')}\right]$$

$$= 12.50 + .1\left[\frac{(1000.000000 - 1004.674391)}{(1003.235366 - 1004.674391)}\right] = 12.82483042\ \%$$

Step 4:

First iteration, let I_1=12.82483042% and repeat

Steps 1, 2, and 3 obtaining a new I=12.82557859%

Second iteration, let I_1=12.82557859% and repeat

Steps 1, 2, and 3 obtaining a new I=12.82557529%

In this case, no further iterations are required to obtain the annual percentage rate correct to two decimal places, 12.83%.

When the iteration approach is used, it is expected that calculators or computers will be programmed to carry all available decimals throughout the calculation and that enough iterations will be performed to make virtually certain that the annual percentage rate obtained, when rounded to two decimals, is correct.

Annual percentage rates in the examples below were obtained by using a 10 digit programmable calculator and the iteration procedure described above.

III. Examples for the Actuarial Method

(A) *Single advance transaction, with or without an odd first period, and otherwise regular.* The general equation in Section II (H) can be put in the following special form for this type of transaction:

$$A = \frac{1}{(1+fi)(1+i)^t} \cdot \left(P\,\ddot{a}_{\overline{n}|}\right)$$

Example (A)(1): Monthly payments (regular first period)

Amount advanced (A)=$5000. Payment (P)=$230.

Number of payments (n)=24.

Unit-period=1 month. Unit-periods per year (w)=12.

Advance, 1-10-78. First payment, 2-10-78.

From 1-10-78 through 2-10-78=1 unit-period. (t=1; f=0)

Annual percentage rate (I)=wi=.0969=9.69%

Example (A)(2): Monthly payments (long first period)

Amount advanced (A)=$6000. Payment (P)=$200.
Number of payments (n)=36.
Unit-period=1 month. Unit-periods per year (w)=12.
Advance, 2-10-78. First payment, 4-1-78.
From 3-1-78 through 4-1-78=1 unit-period. (t=1)
From 2-10-78 through 3-1-78=19 days. (f=19/30)
Annual percentage rate (I)=wi=.1182=11.82%

Example (A)(3): Semimonthly payments (short first period)
Amount advanced (A)=$5000. Payment (P)=$219.17.
Number of payments (n)=24.
Unit-period=½ month. Unit-periods per year (w)=24.
Advance, 2-23-78. First payment, 3-1-78. Payments made on 1st and 16th of each month.
From 2-23-78 through 3-1-78=6 days. (t=0; f=6/15)
Annual percentage rate (I)=wi=.1034=10.34%

Example (A)(4): Quarterly payments (long first period)
Amount advanced (A)=$10,000. Payment (P)=$385.
Number of payments (n)=40.
Unit-period=3 months. Unit-periods per year (w)=4.
Advance, 5-23-78. First payment, 10-1-78.
From 7-1-78 through 10-1-78=1 unit-period. (t=1)
From 6-1-78 through 7-1-78=1 month=30 days. From 5-23-78 through 6-1-78=9 days. (f=3/10)
Annual percentage rate (I)=wi=.0897=8.97%

Example (A)(5): Weekly payments (long first period)
Amount advanced (A)=$500. Payment (P)=$17.60.
Number of payments (n)=30.
Unit-period=1 week. Unit-periods per year (w)=52.
Advance, 3-20-78. First payment, 4-21-78.
From 3-24-78 through 4-21-78=4 unit-periods. (t=4)
From 3-20-78 through 3-24-78=4 days. (f=4/7)
Annual percentage rate (I)=wi=.1496=14.96%

(B) *Single advance transaction, with an odd first payment, with or without an odd first period, and otherwise regular.* The general equation in Section II(H) can be put in the following special form for this type of transaction:

$$A = \frac{1}{(1+fi)(1+i)^{t}}\left[P_1 + \frac{P\,\ddot{a}_{\overline{n-1}|}}{(1+i)}\right]$$

Example (B)(1): Monthly payments (regular first period and irregular first payment)
Amount advanced (A)=$5000. First payment ($P_1$)=$250.
Regular payment (P)=230. Number of payments (n)=24.
Unit-period=1 month. Unit-periods per year (w)=12.
Advance, 1-10-78. First payment, 2-10-78.
From 1-10-78 through 2-10-78=1 unit-period. (t=1; f=0)
Annual percentage rate (I)=wi=.1008=10.08%

Example (B)(2): Payments every 4 weeks (long first period and irregular first payment)
Amount advanced (A)=$400. First payment ($P_1$)=$39.50.
Regular payment (P)=$38.31. Number of payments (n)=12.
Unit-period=4 weeks. Unit-periods per year (w)=52/4=13.
Advance, 3-18-78. First payment, 4-20-78.
From 3-23-78 through 4-20-78=1 unit-period. (t=1)
From 3-18-78 through 3-23-78=5 days. (f=5/28)
Annual percentage rate (I)=wi=.2850=28.50%

(C) *Single advance transaction, with an odd final payment, with or without an odd first period, and otherwise regular.* The general equation in Section II(H) can be put in the following special form for this type of transaction:

$$A = \frac{1}{(1+fi)(1+i)^{t}}\left[P\,\ddot{a}_{\overline{n-1}|} + \frac{P_n}{(1+i)^{n-1}}\right]$$

Example (C)(1): Monthly payments (regular first period and irregular final payment).
Amount advanced (A)=$5000. Regular payment (P)=$230.
Final payment (P_n)=$280. Number of payments (n)=24.
Unit-period=1 month. Unit-periods per year (w)=12.
Advance, 1-10-78. First payment, 2-10-78.
From 1-10-78 through 2-10-78=1 unit-period. (t=1; f=0)
Annual percentage rate (I)=wi=.1050=10.50%

Example (C)(2): Payments every 2 weeks (short first period and irregular final payment)
Amount advanced (A)=$200. Regular payment (P)=$9.50.
Final payment (P_n)=$30. Number of payments (n)=20.
Unit-period=2 weeks. Unit-periods per year (w)=52/2=26.
Advance, 4-3-78. First payment, 4-11-78.
From 4-3-78 through 4-11-78=8 days. (t=0; f=8/14)
Annual percentage rate (I)=wi=.1222=12.22%

(D) *Single advance transaction, with an odd first payment, odd final payment, with or without an odd first period, and otherwise regular.* The general equation in Section II (H) can be put in the following special form for this type of transaction:

$$A = \frac{1}{(1+fi)(1+i)^{t}}\left[P_1 + \frac{P\,\ddot{a}_{\overline{n-2}|}}{(1+i)} + \frac{P_n}{(1+i)^{n-1}}\right]$$

Example (D)(1): Monthly payments (regular first period, irregular first payment, and irregular final payment)
Amount advanced (A)=$5000. First payment ($P_1$)=$250.
Regular payment (P)=$230. Final payment ($P_n$)=$280.
Number of payments (n)=24. Unit-period=1 month.
Unit-periods per year (w)=12.
Advance, 1-10-78. First payment, 2-10-78.
From 1-10-78 through 2-10-78=1 unit-period. (t=1; f=0)
Annual percentage rate (I)=wi=.1090=10.90%

Example (D)(2): Payments every two months (short first period, irregular first payment, and irregular final payment)
Amount advanced (A)=$8000. First payment ($P_1$)=$449.38.
Regular payment (P)=$465. Final payment ($P_n$)=$200.
Number of payments (n)=20. Unit-period=2 months.
Unit-periods per year (w)=12/2=6.
Advance, 1-10-78. First payment, 3-1-78.
From 2-1-78 through 3-1-78=1 month. From 1-10-78 through 2-1-78=22 days. (t=0; f=52/60)
Annual percentage rate (I)=wi=.0730=7.30%

(E) *Single advance, single payment transaction.* The general equation in Section II (H) can be put in the special forms below for single advance, single payment transactions. Forms 1 through 3 are for the direct determination of the annual percentage rate under special conditions. Form 4 requires the use of the iteration procedure of Section II (I) and can be used for all single advance, single payment transactions regardless of term.

Form 1 - Term less than 1 year:

$$I = 100w\left(\frac{P}{A} - 1\right)$$

Form 2 - Term more than 1 year but less than 2 years:

$$I = \frac{50}{f}\left\{\left[(1+f)^{2} + 4f\left(\frac{P}{A} - 1\right)\right]^{1/2} - (1+f)\right\}$$

Form 3 - Term equal to exactly a year or exact multiple of a year.

$$I = 100\left[\left(\frac{P}{A}\right)^{1/t} - 1\right]$$

Form 4 - Special form for iteration procedure (no restriction on term)

$$A = \frac{P}{(1+fi)(1+i)^{t}}$$

Example (E)(1): Single advance, single payment (term of less than 1 year, measured in days)
Amount advanced (A)=$1000. Payment (P)=$1080.
Unit-period=255 days. Unit-period per year (w)=365/255.
Advance, 1-3-78. Payment, 9-15-78.
From 1-3-78 through 9-15-78=255 days. (t=0; f=0)

Annual percentage rate (I)=wi=.1145=11.45%. (Use Form 1 or 4.)

Example (E)(2): Single advance, single payment (term of less than 1 year, measured in exact calendar months)

Amount advanced (A)=$1000. Payment (P)=$1044.

Unit-period=6 months. Unit-periods per year (w)=2.

Advance, 7-15-78. Payment, 1-15-79.

From 7-15-78 through 1-15-79=6 mos. (t=1; f=0)

Annual percentage rate (I)=wi=.0880=8.80%. (Use Form 1 or 4.)

Example (E)(3): Single advance, single payment (term of more than 1 year but less than 2 years, fraction measured in exact months)

Amount advanced (A)=$1000. Payment (P)=$1135.19.

Unit-period=1 year. Unit-periods per year (w)=1.

Advance, 7-17-78. Payment, 1-17-80.

From 1-17-79 through 1-17-80=1 unit period. (t=1)

From 7-17-78 through 1-17-79=6 mos. (f=6/12)

Annual percentage rate (I)=wi=.0876=8.76%. (Use Form 2 or 4.)

Example (E)(4): Single advance, single payment (term of exactly 2 years)

Amount advanced (A)=$1000. Payment (P)=$1240.

Unit-period=1 year. Unit-periods per year (w)=1.

Advance, 1-3-78. Payment, 1-3-80.

From 1-3-78 through 1-3-79=1 unit-period. (t=2, f=0)

Annual percentage rate (I)=wi=.1136=11.36%. (Use Form 3 or 4.)

(F) *Complex single advance transaction.*

Example (F)(1): Skipped payment loan (payments every 4 weeks)

A loan of $2135 is advanced on 1-25-78. It is to be repaid by 24 payments of $100 each. Payments are due every 4 weeks beginning 2-20-78. However, in those months in which 2 payments would be due, only the first of the two payments is made and the following payment is delayed by 2 weeks to place it in the next month.

Unit-period=4 weeks. Unit periods per year (w)=52/4=13.

First series of payments (single payment) occurs 26 days after 1-25-78. ($t_1=0$; $f_1=26/28$)

Second series of payments begins 9 unit-periods plus 2 weeks after 2-20-78. ($t_2=10$; $f_2=12/28$)

Third series of payments begins 6 unit-periods plus 2 weeks after start of second series. ($t_3=16$; $f_3=26/28$)

Last series of payments begins 6 unit-periods plus 2 weeks after start of third series. ($t_4=23$; $f_4=12/28$)

The general equation in Section II (H) can be written in the special form:

$$2135 = \frac{100\,\ddot{a}_{\overline{9}|}}{(1+(26/28)i} + \frac{100\,\ddot{a}_{\overline{6}|}}{(1+(12/28)i)(1+i)^{10}} + \frac{100\,\ddot{a}_{\overline{6}|}}{(1+(26/28)i)(1+i)^{16}} + \frac{100\,\ddot{a}_{\overline{3}|}}{(1+(12/28)i)(1+i)^{23}}$$

Annual percentage rate (I)=wi=.1200=12.00%

Example (F)(2): Skipped payment loan plus single payments

A loan of $7350 on 3-3-78 is to be repaid by three monthly payments of $1000 each beginning 9-15-78, plus a single payment of $2000 on 3-15-79, plus 3 more monthly payments of $750 each beginning 9-15-79, plus a final payment of $1000 on 2-1-80.

Unit-period=1 month. Unit-periods per year (w)=12.

First series of payments begins 6 unit-periods plus 12 days after 3-3-78. ($t_1=6$; $f_1=12/30$)

Second series of payments (single payment) occurs 12 unit-periods plus 12 days after 3-3-78. ($t_2=12$; $f_2=12/30$)

Third series of payments begins 18 unit-periods plus 12 days after 3-3-78. ($t_3=18$; $f_3=12/30$)

Final payment occurs 22 unit-periods plus 29 days after 3-3-78. ($t_4=22$; $f_4=29/30$)

The general equation in Section II (H) can be written in the special form:

$$7350 = \frac{1000\,\ddot{a}_{\overline{3}|}}{(1+(12/30)i)(1+i)^{6}} + \frac{2000}{(1+(12/30)i)(1+i)^{12}} + \frac{750\,\ddot{a}_{\overline{3}|}}{(1+(12/30)i)(1+i)^{18}} + \frac{1000}{(1+(29/30)i)(1+i)^{22}}$$

Annual percentage rate (I) = wi = .1022 = 10.22%

Example (F)(3): Mortgage with varying payments

A loan of $39,688.56 (net) on 4-10-78 is to be repaid by 360 monthly payments beginning 6-1-78. Payments are the same for 12 months at a time as follows:

Year	Monthly payment
1	$291.81
2	300.18
3	308.78
4	317.61
5	326.65
6	335.92
7	345.42
8	355.15
9	365.12
10	375.33
11	385.76
12	385.42
13	385.03
14	384.62
15	384.17
16	383.67
17	383.13
18	382.54
19	381.90
20	381.20
21	380.43
22	379.60
23	378.69
24	377.69
25	376.60
26	375.42
27	374.13
28	372.72
29	371.16
30	369.50

Unit-period = 1 month. Unit-periods per year (w) = 12.

From 5-1-78 through 6-1-78 = 1 unit-period. (t = 1)

From 4-10-78 through 5-1-78 = 21 days. (f = 21/30)

The general equation in Section II (H) can be written in the special form:

$$39{,}688.56 = \frac{\ddot{a}_{\overline{12}|}}{(1+(21/30)i)(1+i)} \left[291.81 + \frac{300.18}{(1+i)^{12}} + \frac{308.78}{(1+i)^{24}} + \cdots + \frac{369.50}{(1+i)^{348}} \right]$$

Annual percentage rate (I) = wi = .0980 = 9.80%

(G) *Multiple advance transactions.*

Example (G)(1): Construction loan

Three advances of $20,000 each are made on 4-10-79, 6-12-79, and 9-18-79. Repayment is by 240 monthly payments of $612.36 each beginning 12-10-79.

Unit-period = 1 month. Unit-periods per year (w) = 12.

From 4-10-79 through 6-12-79 = (2 + 2/30) unit-periods.

From 4-10-79 through 9-18-79 = (5 + 8/30) unit-periods.

From 4-10-79 through 12-10-79 = (8) unit-periods.

The general equation in Section II (H) is changed to the single advance mode by treating the 2nd and 3rd advances as negative payments:

$$20{,}000 = \frac{612.36\,\ddot{a}_{\overline{240}|}}{(1+i)^{8}} - \frac{20{,}000}{(1+(2/30)i)(1+i)^{2}} - \frac{20{,}000}{(1+(8/30)i)(1+i)^{5}}$$

Annual percentage rate (I) = wi = .1025 = 10.25%

Example (G)(2): Student loan

A student loan consists of 8 advances: $1800 on 9-5-78, 9-5-79, 9-5-80, and 9-5-81; plus $1000 on 1-5-79, 1-5-80, 1-5-81, and 1-5-82. The borrower is to make 50 monthly payments of $240 each beginning 7-1-78 (prior to first advance).

Unit-period = 1 month. Unit-periods per year (w) = 12.
Zero point is date of first payment since it precedes first advance.
From 7-1-78 to 9-5-78 = (2 + 4/30) unit-periods.
From 7-1-78 to 9-5-79 = (14 + 4/30) unit-periods.
From 7-1-78 to 9-5-80 = (26 + 4/30) unit-periods.
From 7-1-78 to 9-5-81 = (38 + 4/30) unit-periods.
From 7-1-78 to 1-5-79 = (6 + 4/30) unit-periods.
From 7-1-78 to 1-5-80 = (18 + 4/30) unit-periods.
From 7-1-78 to 1-5-81 = (30 + 4/30) unit-periods.
From 7-1-78 to 1-5-82 = (42 = 4/30) unit-periods.

Since the zero point is date of first payment, the general equation in Section II (H) is written in the single advance form below by treating the first payment as a negative advance and the 8 advances as negative payments:

$$-240 = \frac{240\,\ddot{a}_{\overline{49}|}}{(1+i)} - \frac{1800}{1+(4/30)i}\left[\frac{1}{(1+i)^{2}} + \frac{1}{(1+i)^{14}} + \frac{1}{(1+i)^{26}} + \frac{1}{(1+i)^{38}}\right] - \frac{1000}{1+(4/30)i}\left[\frac{1}{(1+i)^{6}} + \frac{1}{(1+i)^{18}} + \frac{1}{(1+i)^{30}} + \frac{1}{(1+i)^{42}}\right]$$

Annual percentage rate (I) = wi = .3204 = 32.04%

(H) *Transaction involving required deposit balance.*

Example (H)(1): Required constant deposit balance

Creditor advances $1000 on 4-12-79 and requires borrower to maintain a deposit balance of $200 throughout the 12 month loan. The loan is to be repaid by 12 equal monthly payments of $90 each beginning 5-12-79. The deposit balance will be released on 4-12-80.

Unit-period = 1 month. Unit-periods per year (w) = 12.

From 4-12-79 through 5-12-79 = 1 unit-period.

From 4-12-79 through 4-12-80 = 12 unit-periods.

The general equation in Section II (H) can be written as:

$$800 + \frac{200}{(1+i)^{12}} = \frac{90\,\ddot{a}_{\overline{12}|}}{(1+i)}$$

or for iteration solution as:

$$800 = \frac{90\,\ddot{a}_{\overline{12}|}}{(1+i)} - \frac{200}{(1+i)^{12}}$$

Annual percentage rate (I) = wi = .2223 = 22.23%

Example (H)(2): Required periodic deposits into a restricted account

Creditor advances $1000 on 6-15-79. Borrower is required to make 12 monthly payments of $110 each beginning 7-15-79, of which $20 is to be deposited into an account. The account will be released to the borrower at time of final payment on 6-15-80.

Unit-period = 1 month. Unit-periods per year (w) = 12.

From 6-15-79 through 7-15-79 = 1 unit-period.

The general equation in Section II (H) can be written as:

$$1000 + \frac{240}{(1+i)^{12}} = \frac{110\,\ddot{a}_{\overline{12}|}}{(1+i)}$$

or for iteration solution as:

$$1000 = \frac{110\,\ddot{a}_{\overline{12}|}}{(1+i)} - \frac{240}{(1+i)^{12}}$$

Annual percentage rate (I) = wi = .1779 = 17.79%.

By order of the Board of Governors, December 21, 1979.

Theodore E. Allison,

Secretary of the Board.

[FR Doc. 79-39811 Filed 12-28-79; 8:45 am]

BILLING CODE 6210-01-M

FEDERAL TRADE COMMISSION

16 CFR Part 13

[Docket C-3000]

RR International, Inc., et al.; Prohibited Trade Practices and Affirmative Corrective Actions

AGENCY: Federal Trade Commission.

ACTION: Final order.

SUMMARY: In settlement of alleged violations of federal law prohibiting unfair acts and practices and unfair methods of competition, this consent order, among other things, requires a Wilmington, Del. firm and two corporate officers engaged in the advertising, sale and distribution of a product known, among other names, as the G. R. Valve, to cease representing, without reliable substantiation, that installing the G. R. Valve or any substantially similar automobile retrofit device in a motor vehicle will result in fuel economy improvement. They are also barred from using any endorsement or testimonial which has not been properly authorized; and prohibited from misrepresenting a product endorser's expertise in a field of knowledge, and the conclusions of tests or surveys pertaining to energy consumption or energy saving characteristics of automobile retrofit devices. Additionally, the order requires that product advertising disclose any material connection that may exist between endorser and the firm or its corporate officers.

DATES: Complaint and order issued Nov. 28, 1979.[1]

FOR FURTHER INFORMATION CONTACT: FTC/PE, Linda C. Dorian, Washington, D.C. 20580. (202) 724-1524.

SUPPLEMENTARY INFORMATION: On Monday, July 16, 1979, there was published in the Federal Register, 44 FR 41218, a proposed consent agreement with analysis In the Matter of RR International, Inc., a corporation; Eduard A. Hamala, Cary Bunin, individually and as officers of the corporation, for the purpose of soliciting public comment. Interested parties were given sixty (60) days in which to submit comments, suggestions or objections regarding the proposed form of order.

No comments having been received, the Commission has ordered the issuance of the complaint in the form contemplated by the agreement, made its jurisdictional findings and entered its order to cease and desist, as set forth in the proposed consent agreement, in disposition of this proceeding.

The prohibited trade practices and/or corrective actions, as codified under 16 CFR Part 13, are as follows: Subpart-Advertising Falsely or Misleadingly: § 13.110 Endorsements, approval and testimonials; § 13.135 Nature of product or service; § 13.170 Qualities or properties of product or service; 13.170-34 Economizing or saving; § 13.190 Results; § 13.205 Scientific or other relevant facts; § 13.210 Scientific tests; § 13.255 Surveys. Subpart-Claiming or Using Endorsements or Testimonials Falsely or Misleadingly: § 13.330 Claiming or using endorsements or testimonials falsely or misleadingly. Subpart-Corrective Actions and/or Requirements: § 13.533-20 Disclosures; 13.533-45 Maintain records. Subpart-Misrepresenting Oneself and Goods—Goods: § 13.1665 Endorsements; § 13.1710 Qualities or properties; § 13.1730 Results; § 13.1740 Scientific or other relevant facts; § 13.1757 Surveys.

[1] Copies of the Complaint and Decision and Order filed with the original document.

Subpart-Neglecting, Unfairly or Deceptively, To Make Material Disclosure: § 13.1885 Qualities or properties; § 13.1895 Scientific or other relevant facts. Subpart-Offering Unfair, Improper and Deceptive Inducements To Purchase or Deal: § 13.2063 Scientific or other relevant facts.

(Sec. 6, 38 Stat. 721; 15 U.S.C. 46. Interprets or applies sec. 5, 38 Stat. 719, as amended; 15 U.S.C. 45)

Carol M. Thomas,

Secretary.

[FR Doc. 79-39823 Filed 12-28-79; 8:45 am]

BILLING CODE 6750-01-M

CONSUMER PRODUCT SAFETY COMMISSION

16 CFR Part 1000

Commission Organization and Functions

AGENCY: Consumer Product Safety Commission.

ACTION: Publication of Revised Statement of Organization and Functions.

SUMMARY: The Consumer Product Safety Commission is publishing a revised statement of organization and functions to reflect organizational changes made since the last publication of Part 1000, to reflect expansion of the Commission's Hotline service, to advise the public of the existence of the Commission's Directives System, and to make editorial changes.

DATES: This Part is effective when published (December 31, 1979), since it involves only agency organization and practice.

FOR FURTHER INFORMATION CONTACT: Joseph F. Rosenthal, Office of General Counsel, Consumer Product Safety Commission, Washington, D.C. 20207, Telephone 202-634-7770.

SUPPLEMENTARY INFORMATION: The Office of Strategic Planning and the Office of Communications, old sections 1000.14 and 1000.16, have been eliminated. The proposed Office of Public Participation, old section 1000.18, will not be implemented; its functions have been absorbed by the Office of the Secretary, as described in new section 1000.18. Three new organizational units are described, the Office of Media Relations in section 1000.17, the Office of Budget, Program Planning and Evaluation in section 1000.23, and the Directorate of Communications in section 1000.30. The description of the Hotline, formerly part of old section 1000.3, has been assigned a separate new section, 1000.3, and has been revised to reflect changed and expanded services. A description of the Commission's Directives System appears for the first time in a new section 1000.13.

The following changes have been made in the descriptions of the Commission's ongoing functions and organizational units.

(a) Section 1000.5, Petitions, has been revised to delete the citation to 21 CFR 2.65 since the cited section no longer exists.

(b) Section 1000.6, Commission Decisions and Records, has been expanded to reflect the fact that the Commission now records its official actions in minutes of meetings in addition to, or instead of, records of individual actions, and to inform the public that these documents are available in the Commission's public reading room.

(c) Section 1000.8, Meetings and Hearings; Public Notice, has been expanded to indicate that notices of meetings, hearings, and other activities are published in the Commission's Public Calendar. Other editorial changes in this section do not involve substantive matters.

(d) Section 1000.11, Delegation of Functions, now indicates that delegations are published in the Commission's Directives System.

(e) Section 1000.12, Organization Structure, has been revised to correspond to the organizational units described in this Part.

(f) Section 1000.14, Office of the General Counsel, has been slightly revised to reflect the fact that this Office now supervises all Commission litigation. A non-substantive editorial change has also been made.

(g) Section 1000.16, Office of Administrative Law Judge, has been expanded to reflect that the Office has duties in connection with rulemaking as well as adjudication.

(h) Section 1000.18, Office of the Secretary, has been substantially revised to include the Office's role in publishing the Public Calendar, administering public participation activities, and issuing Federal Register notices. Substantial editorial changes have also been made.

(i) Section 1000.19, Office of Internal Audit, has been expanded to reflect the Office's concern with the cost of Commission programs and organization.

(j) Section 1000.20, Office of Equal Employment Opportunity and Minority Enterprise, has been revised to more accurately describe the Office's functions with respect to the Small Business Act.

(k) Section 1000.21, Office of the Executive Director, has been expanded to include a listing of the two Offices now reporting to the Executive Director.

(l) Section 1000.22, Office of Program Management, now includes the Office's responsibilities in connection with the Commission's program on emerging hazards.

(m) Section 1000.27, Directorate for Compliance and Enforcement, has been revised to reflect the fact that corrective action plans may deal with the recall of noncomplying, as well as defective, products.

(n) Section 1000.28, Directorate for Field Operations, incorporates non-substantive editorial changes.

(o) Section 1000.29, Directorate for Administration, has been revised by deleting the functions now assigned to the Office of Budget, Program Planning and Evaluation, described in section 1000.23, and adding the functions of financial management and organizational analysis.

PART 1000—COMMISSION ORGANIZATION AND FUNCTIONS

Sec.
1000.1 The Commission.
1000.2 Laws administered.
1000.3 Hotline.
1000.4 Commission addresses.
1000.5 Petitions.
1000.6 Commission decisions and records.
1000.7 Advisory opinions and interpretations.
1000.8 Meetings and hearings; public notice.
1000.9 Quorum.
1000.10 The Chairman and Vice Chairman.
1000.11 Delegation of functions.
1000.12 Organization structure.
1000.13 Directives System.
1000.14 Office of the General Counsel.
1000.15 Office of Congressional Relations.
1000.16 Office of Administrative Law Judge.
1000.17 Office of Media Relations.
1000.18 Office of the Secretary.
1000.19 Office of Internal Audit.
1000.20 Office of Equal Employment Opportunity and Minority Enterprise.
1000.21 Office of the Executive Director.
1000.22 Office of Program Management.
1000.23 Office of Budget, Program Planning and Evaluation.
1000.24 Directorate for Hazard Identification and Analysis.
1000.25 Directorate for Engineering and Science.
1000.26 [Reserved]
1000.27 Directorate for Compliance and Enforcement.
1000.28 Directorate for Field Operations.
1000.29 Directorate for Administration.
1000.30 Directorate for Communications.

Authority: 5 U.S.C. 552(a), Administrative Procedure Act.

§ 1000.1 The Commission.

(a) The Consumer Product Safety Commission is an independent

regulatory agency which was formed on May 14, 1973, under the provisions of the Consumer Product Safety Act (Pub. L. 92-573, 86 Stat. 1207, as amended (15 U.S.C. 2051, et seq.)). The purposes of the Commission under the CPSA are:

(1) To protect the public against unreasonable risks of injury associated with consumer products;

(2) To assist consumers in evaluating the comparative safety of consumer products;

(3) To develop uniform safety standards for consumer products and to minimize conflicting State and local regulations; and

(4) To promote research and investigation into the causes and prevention of product-related deaths, illnesses, and injuries.

(b) The Commission is composed of five members appointed by the President, by and with the advice and consent of the Senate, for terms of seven years.

§ 1000.2 Laws administered.

The Commission administers five acts: (a) The Consumer Product Safety Act (Pub. L. 92-573, 86 Stat. 1207, as amended (15 U.S.C 2051, et seq.))

(b) The Flammable Fabrics Act (Pub. L. 90-189, 67 Stat. 111, as amended (15 U.S.C. 1191, et seq.))

(c) The Federal Hazardous Substances Act (Pub. L. 86-613, 74 Stat. 380, as amended (15 U.S.C. 1261, et seq.))

(d) The Poison Prevention Packaging Act of 1970 (Pub. L. 91-601, 84 Stat. 1670, as amended (15 U.S.C. 1471, et seq.))

(e) The Refrigerator Safety Act of 1956 (Pub. L. 84-930, 70 Stat. 953, 15 U.S.C. 1211, et seq.))

§ 1000.3 Hotline.

(a) The Commission operates a toll-free telephone Hotline by which the public can communicate with the Commission. The number for use in the 48 continguous states, except Maryland, is 800-638-8326. The number for use in Maryland is 800-492-8363. The number for use in Alaska, Hawaii, Puerto Rico, and the U.S. Virgin Islands is 800-638-8333.

(b) The Commission also operates a toll-free Hotline by which deaf or speech-impaired persons can communicate by teletypewriter with the Commission. The teletypewriter number for use in all states except Maryland is 800-638-8270. The teletyprewriter number for use in Maryland is 800-492-8104.

§ 1000.4 Commission addresses.

(a) The principal offices of the Commission are in Washington, D.C. All written communications with the Commission should be addressed to the Consumer Product Safety Commission, Washington, D.C. 20207, unless otherwise specifically directed.

(b) The main headquarters of the Commission are at 1111 18th Street NW., Washington, D.C. At this location are the offices of the Chairman and Commissioners, Office of Administrative Law Judge, Office of Congressional Relations, Office of the General Counsel, Office of Media Relations, and Office of the Secretary. A public reading room is maintained in the Office of the Secretary, at this location.

(c) The Executive Director and operating offices under his or her authority are located at 5401 Westbard Avenue, Bethesda, Md.

(d) The Commission has 13 area offices which are located at the following addresses and which serve the states indicated:

(1) Atlanta Area Office, 1330 West Peachtree St. NW., Atlanta, Ga. 30309; Alabama, Florida, Georgia, Kentucky, Mississippi, North Carolina, South Carolina, and Tennessee.

(2) Boston Area Office, 100 Summer St., room 1607, Boston, Mass. 02110; Connecticut, Maine, Massachusetts, New Hampshire, Rhode Island, and Vermont.

(3) Chicago Area Office, 230 South Dearborn St., room 2945, Chicago, Ill. 60604; Illinois and Indiana.

(4) Cleveland Area Office, Plaza 9 Building, 55 Erieview Plaza, Cleveland, Ohio 44114; Michigan and Ohio.

(5) Dallas Area Office, 500 South Ervav, room 410C, Dallas, Tex. 75201; Arkansas, Louisiana, New Mexico, Oklahoma, and Texas.

(6) Denver Area Office, Guaranty Bank Bldg., Suite 938, 817 17th Street, Denver, Colo. 80202; Colorado, Montana, North Dakota, South Dakotá, Utah, and Wyoming.

(7) Kansas City Area Office, Traders National Bank Bldg., 1125 Grand Avenue, Suite 1500, Kansas City, Mo. 64106; Iowa, Kansas, Missouri, and Nebraska.

(8) Los Angeles Area Office, 3660 Wilshire Blvd., Suite 1100, Los Angeles, Calif. 90010; Arizona and the following Counties in California: Imperial, Los Angeles, Orange, Riverside, San Bernadino, San Diego, San Luis Obispo, Santa Barbara, and Ventura.

(9) Minneapolis Area Office, Federal Bldg., room 650, Fort Snelling, Twin Cities, Minn. 55111; Minnesota and Wisconsin.

(10) New York Area Office, 6 World Trade Center, Vesey Street, 6th Floor, New York, N.Y. 10048; New Jersey, New York, Puerto Rico, and Virgin Islands.

(11) Philadephia Area Office, 400 Market Street, 10th Floor, Philadelphia, Pa. 19106; Delaware, District of Columbia, Maryland, Pennsylvania, Virginia, and West Virginia.

(12) San Francisco Area Office, 100 Pine Street, Suite 500, San Francisco, Calif. 94111; Hawaii, Nevada, and all Counties in California not covered by Los Angeles Area Office.

(13) Seattle Area Office, 392 Federal Bldg., 915 Second Avenue, Seattle, Wash. 98174; Alaska, Idaho, Oregon, and Washington.

§ 1000.5 Petitions.

Any interested person may petition the Commission to issue, amend, or revoke a rule or regulation by submitting a written request to the Secretary, Consumer Product Safety Commission, Washington, D.C. 20207. Any petition under the Consumer Product Safety Act must meet the requirements of 16 CFR Part 1110. Petitions regarding products regulated under the other acts the Commission administers are governed by the Administrative Procedure Act (5 U.S.C. 553(e)) and, where applicable, existing Commission procedures at 16 CFR 1607.4, 16 CFR 1500.82, and 16 CFR 1500.201. However, the Commission encourages persons filing such petitions to follow as closely as possible the requirements and recommendations in 16 CFR 1110.7.

§ 1000.6 Commission decisions and records.

(a) Each decision of the Commission, acting in an official capacity as a collegial body, is recorded in Minutes of Commission meetings or as a separate Record of Commission action. Copies of Minutes or of a Record of Commission action may be obtained upon written request from the Secretary, Consumer Product Safety Commission, Washington, D.C. 20207, or may be examined in the public reading room at Commission headquarters. Requests should identify the subject matter of the Commission action and the approximate date of the Commission action, if known.

(b) Other records in the custody of the Commission may be requested in writing from the Office of the Secretary pursuant to the Commission's Procedures for Disclosure or Production of Information under the Freedom of Information Act (16 CFR Part 1015).

§ 1000.7 Advisory opinions and interpretations of regulations.

(a) *Advisory opinions.* Upon written request, the General Counsel provides written advisory opinions interpreting the acts the Commission administers.

Advisory opinions represent the legal opinions of the General Counsel and may be changed or superseded by the Commission. Requests for issuance of advisory opinions should be sent to the General Counsel, Consumer Product Safety Commission, Washington, D.C. 20207. Requests for copies of particular previously issued advisory opinions or a copy of an index of such opinions should be submitted to the Office of the Secretary, Consumer Product Safety Commission, Washington, D.C. 20207.

(b) *Interpretations of regulations.* Upon written request, the Associate Executive Director for Compliance and Enforcement will issue written interpretations of Commission regulations pertaining to the safety standards and the enforcement of those standards. Requests for such interpretations should be sent to the Associate Executive director for Compliance and Enforcement, Consumer Product Safety Commission, Washington, D.C. 20207. Requests for interpretations of administrative regulations (e.g., Freedom of Information Act regulations) should be sent to the Secretary, Consumer Product Safety Commission, Washington, D.C. 20207.

§ 1000.8 Meetings and hearings; public notice.

(a) The Commission may meet and exercise all its powers in any place.

(b) Meetings of the Commission are held as ordered by the Commission and, unless otherwise ordered, are held at the principal office of the Commission at 1111 18th Street, N.W., Washington, D.C. Meetings of the Commission for the purpose of jointly conducting the formal business of the agency, including the rendering of official decisions, are generally announced in advance and open to the public, as provided by the Government in the Sunshine Act (5 U.S.C. 552b) and the Commission's Meetings Policy (16 CFR Part 1012).

(c) The Commission may conduct any hearing or other inquiry necessary or appropriate to its functions anywhere in the United States. It will publish notice of any proposed hearing in the Federal Register and will afford a reasonable opportunity for interested persons to present relevant testimony and data.

(d) Notices of Commission meetings, Commission hearings, and other Commission activities are published in a Public Calendar, as provided in the Commission's Meetings Policy (16 CFR Part 1012).

§ 1000.9 Quorum.

Three members of the Commission constitute a quorum for the transaction of business.

§ 1000.10 The Chairman and Vice Chairman.

(a) The Chairman is the principal executive officer of the Commission and, subject to the general policies of the Commission and to such regulatory decisions, findings, and determinations as the Commission is by law authorized to make, he or she exercises all of the executive and administrative functions of the Commission.

(b) The Commission annually elects a Vice Chairman to act in the absence or disability of the Chairman or in case of a vacancy in the Office of the Chairman.

§ 1000.11 Delegation of functions.

Section 27(b)(3) of the Consumer Product Safety Act (15 U.S.C. 2076(b)(3)) authorizes the Commission to delegate any of its functions and powers, other than the power to issue subpoenas, to any officer or employee of the Commission. Delegations are published in the Commission's Directives System.

§ 1000.12 Organization structure.

The Consumer Product Safety Commission is composed of the principal units listed in this section.

(a) The following units report directly to the Chairman of the Commission:

(1) Office of the General Counsel
(2) Office of Congressional Relations
(3) Office of Administrative Law Judge
(4) Office of Media Relations
(5) Office of the Secretary
(6) Office of Internal Audit
(7) Office of Equal Employment Opportunity and Minority Enterprise
(8) Office of the Executive Director

(b) The following units report directly to the Executive Director of the Commission:

(1) Office of Program Management
(2) Office of Budget, Program Planning and Evaluation
(3) Directorate for Hazard Identification and Analysis
(4) Directorate for Engineering and Science
(5) Directorate for Compliance and Enforcement
(6) Directorate for Field Operations
(7) Directorate for Administration
(8) Directorate for Communications

§ 1000.13 Directives system.

The Commission maintains a Directives System which contains delegations of authority and descriptions of Commission programs, policies, and procedures. A copy is available for inspection in the public reading room at Commission headquarters.

§ 1000.14 Office of the General Counsel.

The Office of the General Counsel provides advice and counsel to the Commissioners and organizational components of the Commission on matters of law arising from operations of the Commission. It prepares the Commission's legislative program and comments on relevant legislative proposals originating elsewhere. The Office, in conjunction with the Department of Justice, is responsible for the conduct of litigation to which the Commission is a party. The Office also reviews and approves the litigation aspects of enforcement matters. The Office provides final legal review of and makes recommendations to the Commission on proposed product safety standards, rules, laws, regulations, petition actions, and substantial hazard actions. It also provides legal review of certain procurement, personnel, and administrative actions and drafts documents for publication in the Federal Register.

§ 1000.15 Office of Congressional Relations.

The Office of Congressional Relations is the principal contact with the committees and members of Congress. It performs liaison duties for the Commission, provides information and assistance to Congress on matters of Commission policy, and coordinates testimony and appearances by Commissioners and agency personnel before Congress.

§ 1000.16 Office of Administrative Law Judge.

The Office of Administrative Law Judge performs duties in connection with matters of adjudication and rulemaking as prescribed by the Commission and required by statute.

§ 1000.17 Office of Media Relations.

The Office of Media Relations distributes health and safety information to the public through the news media. It writes and issues press releases and detailed fact sheets, prepares and distributes to news media a monthly summary of product recalls, responds to reporters' inquiries, and helps prepare speeches for the Commissioners. It also prepares and distributes materials to employees to keep them informed of Commission policies, plans, and activities.

§ 1000.18 Office of the Secretary.

The Office of the Secretary prepares the Commission's agenda, schedules and coordinates Commission business at official meetings, and records, issues, and stores the official records of Commission actions. The Office prepares and publishes the Public Calendar under the Commission's Meetings Policy. It also administers the

Commission's public participation activities, including provisions for the financial compensation of participants, and manages activities of the Commission's advisory committees. The Office exercises joint responsibility with the Office of the General Counsel for the interpretation and application of the Privacy Act, Freedom of Information Act, Federal Advisory Committee Act, and the Government in the Sunshine Act, and prepares or coordinates reports required by these acts. It issues Commission decisions, orders, rules, and other official documents, including Federal Register notices, for and on behalf of the Commission and controls the use of the Commission seal. The Office supervises and administers the dockets of adjudicative proceedings before the Commission. The Office also supervises and administers the public reading room.

§ 1000.19 Office of Internal Audit.

This Office reviews, analyzes, and reports on Commission programs and organization to assess compliance with relevant laws, regulations, and principles of efficiency, effectiveness, and economy.

§ 1000.20 Office of Equal Employment Opportunity and Minority Enterprise.

The Office of Equal Employment Opportunity and Minority Enterprise assures the agency complies with all laws, regulations, rules and internal policies relating to equal employment opportunity. It assures compliance with the Small Business Act as it relates to small and disadvantaged business utilization. The Office also conducts the Upward Mobility Program.

§ 1000.21 Office of the Executive Director.

The Executive Director, under the broad direction of the Chairman and in accordance with Commission policy, acts as the chief operating manager of the agency, supporting the development of the agency's budget and operating plan before and after Commission approval, and managing the execution of those plans. The Executive Director has direct line authority over six operating directorates: Hazard Identification and Analysis, Engineering and Science, Compliance and Enforcement, Field Operations, Communications, and Administration, as well as the Office of Program Management, and the Office of Budget, Program Planning and Evaluation.

§ 1000.22 Office of Program Management.

The Office of Program Management manages the hazard related programs delineated in the Commission's operating plan or assigned by the Executive Director. It provides continual and consistent direction to all projects, including voluntary standards and petitions, and emerging hazards especially where functional responsibility extends across and between directorates. The program managers' authority works in a complementary fashion with the functional authority vested in the Associate Executive Directors to be certain that relevant legal, technical, environmental, economic, and social impacts of projects are comprehensively and objectively presented to the Commission for decision. The Office exercises program review over the progress of projects to maintain priorities.

§ 1000.23 Office of Budget, Program Planning and Evaluation.

The Office of Budget, Program Planning and Evaluation is responsible for the development of the Commission's goals and objectives, program and resource plans, budget development and analysis, and evaluation of program accomplishment. It prepares the Commission's Operating Plan in consultation with other offices and directorates. It develops and uses analytical methods, standards and techniques in the measurement of program accomplishments, recommending changes to enhance effectiveness of the Commission's program and activities.

§ 1000.24 Directorate for Hazard Identification and Analysis.

The Associate Executive Director for Hazard Identification and Analysis manages the Directorate for Hazard Identification and Analysis and acts under the broad direction of the Office of the Executive Director. The Associate Executive Director, assisted by subordinate management, is responsible for technical policy; maintenance of technical quality and productivity; planning input; review; and administrative control within his or her functional area of responsibility. The Directorate's functional responsibility includes injury data analysis to identify hazards or hazard patterns, economic impact analysis of remedial regulations, and preparation of assessment and environmental impact statements. The Directorate collects data on consumer product-related hazards and potential hazards; determines the frequency, severity, and distribution of the various types of injuries; and investigates their causes. It assesses the effects of product safety standards and programs on consumer injuries, conducts epidemiological studies and research in the fields of consumer-related injuries, and provides data describing the human factors aspects of injury. It maintains an injury data clearinghouse and manages the National Electronic Injury Surveillance System (NEISS). The Directorate also collects data and conducts analyses of both economic and environmental factors which are required to support the development and implementation of remedial strategies. The Directorate also provides analysis and advice to assure that technical standards requirements are compatible with human anthropometric, perception, and other performance tolerances. It assists in reviewing hazard patterns and epidemiological analysis to clarify possible injury patterns attributed to human factors and advises on all other Commission activities requiring human factors input.

§ 1000.25 Directorate for Engineering and Science.

The Associate Executive Director for Engineering and Science manages the Directorate of Engineering and Science and acts under the broad direction of the Office of the Executive Director. The Associate Executive Director, assisted by subordinate management, is responsible for technical policy, maintenance of technical quality and productivity; planning input; review, and administrative control within his or her functional area of responsibility. The Directorate's functional responsibility includes development and evaluation of product safety standards and test methods based on engineering, chemical, biological, and other physical and medical sciences and the conduct and relevant evaluation of specific product testing to support general agency regulatory activity. The Directorate develops and evaluates performance criteria, design specifications, and quality control standards for consumer products and provides scientific and technical expertise to the Commission. It conducts and evaluates engineering tests and test-methods, participates in the engineering development of product safety standards, and provides advice on proposed standards. It performs or monitors research in the engineering sciences and provides technical supervision to Commission field engineering laboratories and other engineering test facilities. It collects scientific and technical data and reviews and evaluates scientific, technical and medical reports to determine the physiological effects of injury and potential injury treatment to provide technical and medical support

in the promulgation of product safety standards. It conducts tests and evaluates toxicological and chemical hazards and provides technical supervision to agency field chemical laboratories and other chemical and toxicological testing facilities. The Directorate also provides technical support to the Commission's information and education program and to its compliance and enforcement program.

§ 1000.26 [Reserved]

§ 1000.27 Directorate for Compliance and Enforcement.

The Associate Executive for Compliance and Enforcement manages the Directorate for Compliance and Enforcement and acts under the broad direction of the Office of the Executive Director. The Associate Executive Director, assisted by subordinate management, is responsible for surveillance and enforcement policy; maintenance of legal case quality, consistency, and productivity; planning input; review; and administrative control within his or her functional area of responsibility. The Directorate's functional responsibility includes identifying and acting on any defective consumer product already in distribution, and establishing industry compliance with existing safety standards through planning and implementation of surveillance and enforcement programs, and the conduct of enforcement litigation. Inherent in this area of responsibility is the provision of consistent legal advice and case guidance to field offices and participation in the development of standards prior to promulgation to assure enforceability of the final product. The Directorate is responsible for the identification of, or response to notification of, any products which may or do possess substantial product safety defects. It reviews consumer complaints, in-depth investigations, and other data to identify those consumer products containing such defects. It assists firms to assess their responsibilities and actively encourages firms to identify and report product defects with present possible substantial hazards. The Directorate negotiates and subsequently monitors corrective action plans designed to recall defective or noncomplying products and gives public warning to consumers where appropriate. It gathers information on generic product hazards which may lead to subsequent initiation of safety standard setting procedures. The Directorate develops surveillance strategies and programs designed to assure compliance with Commission standards and regulations. It originates surveillance and enforcement instruction to field offices and provides subsequent interpretations or legal guidance for field surveillance and enforcement activities. Inherent in this function is the authority to conduct or supervise the conduct of enforcement activity under all administered acts and to provide advice and guidance to regulated industries on complying with all administered acts. The Directorate reviews standards and rules being developed to ensure clarity and enforceability.

§ 1000.28 Directorate for Field Operations.

(a) The Associate Executive Director for Field Operations executes direct line authority over all Commission field operations; develops, issues, approves, or clears proposals and instructions affecting the field activities; and provides a central point within the Commission from which Headquarters' officials can obtain field support services. This office provides direction and leadership to the Area Office Directors; and promulgates policies and operational guidelines which form the framework for management of Commission field operations. This office works closely with the other Headquarters functional units and the Area Offices to assure effective Headquarters-Field relationships, proper allocation of resources to support Commission priorities in the field, effective performance of field tasks, represents the field and prepares field programs documents. It coordinates direct contact procedures between Headquarters and Area Offices. This office is responsible for liaison with State, local and other Federal agencies on product safety programs in the field.

(b) Area Offices are responsible for carrying out investigation, compliance, and communication activities within their areas. They support and maintain liaison with components of the Commission, other Area Offices, and appropriate Federal, State, and local government offices. They implement and encourage compliance with the laws and regulations enforced by the Commission. Selected Area Offices possess laboratory capabilities.

§ 1000.29 Directorate for Administration.

The Associate Executive Director for Administration manages the Directorate of Administration and acts under the broad direction of the Office of the Executive Director. The Associate Executive Director, assisted by subordinate management, is responsible for general administrative policy; maintenance of timeliness, quality, and efficiency of services; planning input, review; and administrative control within his or her functional area of responsibility. The Directorate's functional responsibility includes all general and delegated administrative functions supporting the Commission in the areas of financial management, management and organizational analysis, personnel, training, automated data systems, telecommunications, the reference library, and the physical plant. The Directorate is responsible for the execution of payment, financial control, accounting, and reporting of all expenditures within the Commission. It is responsible for all aspects of personnel management for the Commission, including recruitment and placement, classification standards and policies, and employee and labor-management relations. It evaluates the need for, develops, and implements all training programs for the Commission, including employee training, executive development, and training programs involving outside parties. The Directorate designs, implements, and operates all automated data systems and telecommunications. It provides support services for space management, supply and property management, security, printing and reproduction, records management, transportation, warehousing, utilities, and mail. It is responsible for all CPSC contracts and procurement of services and supplies. It develops, implements, and maintains management information systems and distributes summary reports on data accumulated by those systems. The Directorate also maintains and updates the reference library, performs data and bibliographic research for the agency and its constituency, and administers the ordering, receiving, and distribution of all publications requested by or for CPSC personnel.

§ 1000.30 Directorate for Communications.

The Directorate for Communications assists consumers in evaluating the comparative safety of products, conducts educational activities, transmits information, and develops strategies to affect consumer awareness, attitudes, knowledge and behavior toward product safety. The Directorate designs and produces publications and informational and educational matters, multi-media materials, films and public service announcements. Also, the Directorate provides advice for the development of public statements, operates a speakers' service for appearances by agency representatives and produces an agency newsletter. The Directorate plans, directs, and evaluates

comprehensive national consumer product safety information and education programs. Also, it conducts national surveys to assess public awareness of product safety, and carries out studies to assess the impact of its activities. Further, the staff collaborates with industry, consumer groups, and other agency staffs to carry out agency communications projects.

Dated: December 26, 1979.

Sadye E. Dunn,

Secretary, Consumer Product Safety Commission.

[FR Doc. 79-39917 Filed 12-28-79; 8:45 am]

BILLING CODE 6355-01-M

DEPARTMENT OF ENERGY

Federal Energy Regulatory Commission

18 CFR Part 1

[Docket No. RM79-32]

Canceling Public Hearing

Issued: December 18, 1979.

AGENCY: Federal Energy Regulatory Commission.

ACTION: Notice of cancelation of public hearing.

SUMMARY: Order 24-A, issued November 27, 1979 under Docket No. RM79-32, amended § 1.41 of the Commission's rules of practice and procedure to provide for waiver of procedures which implement section 502(c) of the Natural Gas Policy Act of 1978 (procedures for adjustments from Commission rules or orders issued under the NGPA). 44 FR 69284 (December 3, 1979). In Order 24-A the Commission set a date for the oral presentation of data, views, and arguments on the waiver provisions and stipulated that requests to participate in that presentation should be filed by December 19, 1979. There being no such requests filed, the hearing for oral presentations is canceled.

DATE: Notice issued December 18, 1979.

FOR FURTHER INFORMATION CONTACT: John Conway, Office of the General Counsel, Federal Energy Regulatory Commission, Room 8100-K, 825 North Capitol Street, NE., Washington, D.C. 20426, (202) 357-8150.

In the matter of procedures for adjustments of rules and orders issued by the Federal Energy Regulatory Commission under the NGPA.

On November 27, 1979 the Commission issued Order 24-A [1] to amend interim regulations implementing procedures whereby any person may seek, pursuant to Section 502(c) of the Natural Gas Policy Act of 1978 (NGPA), an adjustment from Commission rules and orders issued under the NGPA.[2] By that order the Commission explicitly provided for a waiver of the procedures of § 1.41 for those cases which, while not filed under or in accordance with the provisions of that section, should nonetheless be considered for adjustments because of the issues they raise.

In that Order 24-A amended a regulation issued under the NGPA, the Commission provided an opportunity for the oral presentation of data, views and arguments on the order as required by Section 502(b) of the NGPA. That opportunity was to be by hearing convened on Wednesday, December 19, 1979 at the Offices of the Commission; and requests to participate in that hearing were to be directed to the Office of the Secretary of the Commission by December 14, 1979. There being no record of any such request having been received by the Commission, the hearing is therefore cancelled.

Kenneth F. Plumb,

Secretary.

[FR Doc. 79-39810 Filed 12-28-79; 8:45 am]

BILLING CODE 6450-01-M

[1] 44 *Fed. Reg.* 69284 (December 3, 1979).

[2] The original interim regulations implementing Section 502(c) of the NGPA were issued as § 1.12 of the Commission's rules and regulations. Order 24, Docket No. RM79-32 (March 22, 1979), 44 *Fed. Reg.* 18961 (March 30, 1979).

DEPARTMENT OF THE TREASURY

Internal Revenue Service

26 CFR Part 5B

[T.D. 7664]

Temporary Income Tax Regulations Under the Foreign Earned Income Act of 1978; the Foreign Earned Income Exclusion

AGENCY: Internal Revenue Service, Treasury.

ACTION: Temporary regulations.

SUMMARY: This document provides temporary regulations relating to the foreign earned income exclusion. Changes to the applicable tax law were made by the Foreign Earned Income Act of 1978. These regulations affect individuals residing in camps located in hardship areas.

DATE: The regulations apply to taxable years beginning after December 31, 1977.

FOR FURTHER INFORMATION CONTACT: Mary E. Dean of the Legislation and Regulations Division, Office of Chief Counsel, Internal Revenue Service, 1111 Constitution Avenue, N.W., Washington, D.C. 20224, Attention: CC:LR:T; 202-566-3289 (not a toll-free call).

SUPPLEMENTARY INFORMATION:

Background

This document contains temporary regulations under section 911 of the Internal Revenue Code of 1954. The amendments are being proposed to conform the regulations under section 911 relating to the foreign earned income exclusion to section 202 of the Foreign Earned Income Act of 1978 (Pub. L. No. 95-615, 92 Stat. 3098). The temporary regulations provided by the document will remain in effect until superseded by final regulations on this subject.

Explanation of Provision

This Treasury decision contains only amendments to § 5b.911-1(c) relating to the definition of camp. The amended temporary regulations, § 5b.911-1(c) amplify the statutory definition of camp. Paragraph (c)(1) of § 5b.911-1 sets forth the general definition of camp. A rule has been added, providing that two or more common areas or enclaves which house employees who work on the same project are considered to be one common area or enclave in determining whether the lodging accommodates 10 or more employees performing services at the taxpayer's worksite.

Paragraph (c)(2) of § 5b.911-1 provides that lodging will be considered to be substandard if it is appreciably below the standard of housing typically occupied in the United States by individuals whose income equals the lesser of the median salary paid to American employees residing in the common area or the salary of an employee of the United States who is compensated at an annual rate paid for step 1 of grade GS-14. A list of facts and circumstances to be considered in determining whether lodging is substandard is provided. In addition a list of presumptions is provided.

Paragraph (c)(3) of § 5b.911-1 provides a new definition of remote area which focuses on the availability of satisfactory housing. A list of facts and circumstances to be considered in determining whether an area is remote is provided. In addition a list of presumptions is provided.

Drafting Information

The principal author of the regulation is Mary E. Dean of the Legislation and Regulations Division of the Office of Chief Counsel, Internal Revenue Service. However, personnel from other offices of the Internal Revenue Service

and Treasury Department participated in developing the regulation, both on matters of substance and style.

Adoption of amendments to the regulations

The amendments to 26 CFR Part 5b are as follows:

Paragraph 1. Section 5b.911-1(c) is revised to read as follows:

§ 5b.911-1 Individuals qualifying for the exclusion.

* * * * *

(c) *Camp*—(1) *In general.* A camp is lodging which is all of the following:

(i) Substandard;

(ii) Provided by or on behalf of the employer for the convenience of the employer because the place where the taxpayer renders services is in a remote area where satisfactory housing is not available to the taxpayer on the open market;

(iii) Located as near as practicable to, and in the vicinity of, the worksite of the taxpayer; and

(iv) Furnished in a common area or enclave which is not available to the general public for lodging or accommodations and which normally accommodates 10 or more persons who are either employees of the taxpayer's employer or other employees performing services at the taxpayer's worksite.

For purposes of paragraph (c)(1)(ii) of this section, the term "for the convenience of the employer" has the same meaning which it has for purposes of section 119. For purposes of paragraph (c)(1)(iv) of this section, a cluster of housing units is not a common area or enclave if it is adjacent to or surrounded by substantially similar housing available to the general public. For purposes of paragraph (c)(1)(iv) of this section, two or more common areas or enclaves which house employees who work on the same project (for example, a highway project) are considered to be one common area or enclave in determining whether they normally accommodate 10 or more employees performing services at the taxpayer's worksite.

(2) *Substandard lodging*—(i) *In general.* Lodging is considered to be substandard if, under all the relevant facts and circumstances, it is appreciably below the standard of housing typically occupied in the United States by individuals whose income equals the lesser of the median salary paid to American employees residing in the common area or the salary of an emloyee of the United States who is compensated at an annual rate paid for step 1 of grade GS-14. Relevant facts and circumstances which may indicate that lodging is substandard include (but are not limited to) the following:

(A) Inadequate living space;

(B) Lack of privacy occasioned by communal dining halls or other shared facilities;

(C) Temporary nature of the lodging, such as that inherent in prefabricated housing set in position or cinder blocks or housing consisting of movable units such as mobile homes, trailers, or portable camp facilities;

(D) An immediate environment that exposes the occupants of the housing to unsanitary or unhealthy conditions (for example, open sewers immediately adjacent to the housing) or to unusual risk of personal harm or property loss due to terrorism or civil unrest;

(E) Lack of improvements typically found in residential areas in the United States, such as paved and lighted streets, recreational areas, sewage facilities, and landscaping; or

(F) The cost per square foot of the lodging if constructed in the United States would be substantially less than the median cost per square foot to construct housing in the United States.

The general environment in which lodging is located (*e.g.*, the climate, prevalence of insects, etc.) does not of itself make lodging substandard. The general environment is relevant, however, if lodging is inadequate to protect the occupants from environmental conditions. The individual employee's income level is under no circumstances relevant to whether lodging is substandard. Thus, lodging occupied by a particular employee which is substantially inferior to the housing previously occupied by that individual in the United States is not substandard unless it is also substantially inferior to housing typically occupied in the United States by individuals whose income equals the lesser of the median salary paid to American employees residing in the common area or the salary of a GS-14, step 1, U.S. Government employee.

(ii) *Presumptions.* Lodging will generally be considered to be substandard if it consists of any of the following:

(A) Portable, temporary, or movable housing occupied by employees who are not accompanied by spouse or dependents, in which the living space intended to be occupied by each employee is less than 250 square feet;

(B) Portable, temporary, or movable housing occupied by employees who are accompanied by spouse or dependents, in which the total interior living space intended to be occupied by a family unit is less than 800 square feet plus 200 square feet for each family member, other than the employee's spouse, who is expected to reside with the employee, and is no more than 1200 square feet;

(C) Housing which lacks adequate and reliable heating or air conditioning if appropriate for the climate, or adequate and reliable utilities such as electricity or sewage facilities; or

(D) Housing which lacks private sleeping quarters for unrelated individuals, private bath or toilet facilities for unrelated individuals, or fresh hot and cold piped water.

Notwithstanding the fact that lodging is described in paragraph (c)(2)(ii) (A), (B), or (C), lodging will not be considered substandard if it is clearly not inferior to housing typically occupied in the United States by individuals whose income equals the lesser of the median salary paid to American employees residing in the common area or the salary of a GS-14, step 1, U.S. Government employee. For purposes of paragraph (c)(2)(ii) (A) and (B), living space does not include shared areas, such as dining halls, lavatories, or storage facilities which are used by unrelated employees. For purposes of paragraph (c)(2)(ii) (A) and (B), housing is not portable, temporary or movable merely because it is prefabricated.

(iii) *Determination of median salary.* In determining the median salary of American employees residing in the common area, any reasonable method may be used. For example, the median salary may be determined by taking the average of the median salaries of American employees at the beginning and end of the calendar year.

(3) *Remote area.* Solely for purposes of section 911, a remote area is a place where satisfactory housing is unavailable to the taxpayer on the open market within a reasonable commuting distance of the place at which the taxpayer renders services.

(i) *Facts and circumstances.* Facts and circumstances to be considered in determining if satisfactory housing is unavailable within a reasonable commuting distance include (but are not limited to):

(A) The inaccessibility to available housing due to geographic factors or the quality of the roads;

(B) The number of housing units available on the open market within a reasonable commuting distance in relation to the number of housing units required for the employer's employees;

(C) The cost of housing available on the open market; or

(D) Terrorism or civil unrest present in the area where housing would be available which would subject U.S.

citizens to unusual risk of personal harm or property loss.

(ii) *Presumptions.* Satisfactory housing will generally be considered to be unavailable to the employee on the open market if any of the following conditions is satisfied:

(A) The foreign government requires the employer to provide housing for its employees other than housing available on the open market;

(B) An unrelated person awarding work to an employer requires that the employer's employees occupy housing specified by such person; or

(C) The place at which the employee renders services is not within a reasonable commuting distance of a community with a population of 50,000 or more individuals.

The conditions of paragraph (c)(3)(ii) (A) and (B) are not fulfilled if the requirement described therein applies primarily to American employers or employers of American employees and there is a significant number of foreign employers or employees other than Americans.

* * * * *

This Treasury decision is issued under the authority contained in section 7805 of the Internal Revenue Code of 1954 (68A Stat. 917; 26 U.S.C. 7805).

Jerome Kurtz,

Commissioner of Internal Revenue.

Approved: December 19, 1979.

Donald C. Lubick,

Assistant Secretary of the Treasury.

[FR Doc. 79-39743 Filed 12-28-79; 2:53 pm]

BILLING CODE 4830-01-M

DEPARTMENT OF JUSTICE

28 CFR Part 0

[Order No. 866-79]

Redesignation of the Office of Public Affairs in the Department of Justice

AGENCY: Department of Justice.

ACTION: Final rule.

SUMMARY: This Order redesignates the Office of Public Affairs formerly known as the Office of Public Information. The change is designed to more accurately reflect the duties, responsibilities and functions of this Office. The duties, responsibilities and functions of this Office remain virtually unchanged. This Order also clarifies the relationship between the Office of Public Affairs and the Attorney General. The Director serves as a Special Assistant to the Attorney General.

EFFECTIVE DATE: December 19, 1979.

FOR FURTHER INFORMATION CONTACT: Robert J. Havel, Deputy Director, Office of Public Information, Department of Justice, Washington, D.C. 20530, telephone: (202) 633-2019.

By virtue of the authority vested in me by 28 U.S.C. 509 and 510 and 5 U.S.C. 301, § 0.17 of Subpart C of Part 0, of Chapter I of Title 28, Code of Federal Regulations is revised to read as follows:

§ 0.17 Office of Public Affairs.

(a) The Office of Public Affairs is headed by a Director of Public Affairs. Subject to the general supervision of the Attorney General, and direction of the Deputy Attorney General, the Director shall:

(1) Handle matters pertaining to relations with the public generally.

(2) Disseminate information to the press, the radio and television services, the public, members of Congress, officials of Government, schools, colleges, and civic organizations.

(3) Coordinate the relations of the Department of Justice with news media.

(4) Serve as a central agency for information relating to the work and activities of all agencies of the Department.

(5) Prepare public statements and news releases.

(6) Coordinate Departmental publications.

(b) The Director shall serve as a Special Assistant to the Attorney General.

Dated: December 19, 1979.

Benjamin R. Civiletti,

Attorney General.

[FR Doc. 79-39826 Filed 12-28-79; 8:45 am]

BILLING CODE 4410-01-M

Attorney General

28 CFR Parts 0 and 42

[Order No. 865-79]

Nondiscrimination; Equal Employment Opportunity; Policies and Procedures; Implementation of Title III of the Civil Service Reform Act of 1978

AGENCY: Department of Justice.

ACTION: Final rule.

SUMMARY: Title III of the Civil Service Reform Act of 1978 (Pub. L. 95-454) amended 5 U.S.C. 7201 to require that each agency develop a recruitment program designed to eliminate underrepresentation of minority groups in specific Federal job categories. In accordance with the requirements of 5 U.S.C. 7201, as amended, the Equal Employment Opportunity Commission published "Guidelines for the Development of a Federal Recruitment Program to Implement 5 U.S.C. Section 7201, as amended" (44 FR 22034 (April 13, 1979)). At the same time, the Office of Personnel Management published regulations amending Part 720 of 5 CFR, "Federal Equal Opportunity Recruitment Program" (44 FR 22029). Those regulations require that each agency "specifically assign responsibility for program implementation to an appropriate agency official" and state that "(a)ll agency officials who have responsibility for the program will be evaluated on their effectiveness in carrying it out as part of their periodic performance appraisals." This Order designates the Associate Attorney General as the official in the Department of Justice who will be responsible for establishing and implementing the Department of Justice Equal Opportunity Recruitment Program.

EFFECTIVE DATE: December 17, 1979.

FOR FURTHER INFORMATION CONTACT: William J. Snider, Administrative Counsel, Justice Management Division, Washington D.C. 20530 (202-633-3452).

By virtue of the authority vested in me by 28 U.S.C. 509 and 510; 5 U.S.C. 301, and Section 310 of the Civil Service Reform Act of 1978 (5 U.S.C. 7201), it is hereby ordered as follows:

Part 0—Organization of the Department of Justice

1. Section 0.19 of Subpart C-1, Part 0, Chapter I of Title 28, Code of Federal Regulations is amended by adding the following new paragraph (a)(6):

§ 0.19 Associate Attorney General.

(a) * * *

(6) Establish and implement the Department of Justice Equal Opportunity Recruitment Program (5 U.S.C. 7201).

* * * * *

PART 42—NONDISCRIMINATION; EQUAL EMPLOYMENT OPPORTUNITY; POLICIES AND PROCEDURES

2. Subpart A of Part 42, Title 28, Code of Federal Regulations, is revised by adding the following new section 42.3:

§ 42.3 Responsibility for Department of Justice Equal Opportunity Recruitment Program.

The Associate Attorney General shall be responsible for establishing and implementing the Department of Justice Equal Opportunity Recruitment Program under 5 U.S.C. 7201.

Dated: December 17, 1979.

Benjamin R. Civiletti,

Attorney General.

[FR Doc. 79-39827 Filed 12-28-79; 8:45 am]

BILLING CODE 4410-01-M

DEPARTMENT OF THE TREASURY

Fiscal Service

31 CFR Parts 316, 332 and 339

Offering of United States; Savings Bonds, Series E and H; Termination

AGENCY: Fiscal Service, Department of the Treasury.

ACTION: Notice of termination.

SUMMARY: This notice is being published to terminate the sale of United States savings bonds of Series E and H, including the exchange offering of Series H bonds, effective at the close of business December 31, 1979.

EFFECTIVE DATE: December 31, 1979.

FOR FURTHER INFORMATION CONTACT: Mr. A. E. Martin, Office of the Chief Counsel, Bureau of the Public Debt, Washington, D.C. 20226, (202) 376-0636.

SUPPLEMENTAL INFORMATION: Department of the Treasury Circulars Nos. 653, Ninth Revision, and 905, Sixth Revision, respectively, offer for sale United States Savings Bonds of Series E and Series H. The sale of these bonds will terminate as of December 31, 1979, except for the sale of Series E bonds through payroll savings plans, which will terminate no later than June 30, 1980.

With the termination of the sale of Series H bonds, the offering of Series H bonds in exchange for United States Savings Bonds of Series E and United States Savings Notes (Freedom Shares) under the terms of Department of the Treasury Circular No. 1036 is also withdrawn. The several circulars will be amended accordingly.

The termination of sale of Series E and H bonds does not affect the status of outstanding bonds of these series, which will continue to earn interest until they reach final maturity.

Dated: December 21, 1979.

Paul H. Taylor,

Fiscal Assistant Secretary.

[FR Doc. 79-39837 Filed 12-28-79; 8:45 am]

BILLING CODE 4810-35-M

DEPARTMENT OF DEFENSE

32 CFR Parts 1-39

Defense Acquisition Regulation (DAR)

AGENCY: Department of Defense.

ACTION: Revision of the 1976 Edition of the Defense Acquisition Regulation.

SUMMARY: In this document, the Department of Defense (DOD) gives notice that it is revising the 1976 *Code of Federal Regulations* (CFR) edition of the Defense Acquisition Regulation (DAR) (formerly Armed Services Procurement Regulation (ASPR)), codified in 32 CFR Parts 1-39, Volumes I, II, and III, by incorporating changes made by Defense Procurement Circulars (DPC) 76-1 through 76-14 and Defense Acquisition Circulars (DAC) 76-15 through 76-19. The Office of the Federal Register (OFR) has scheduled a complete revision of 32 CFR Part 1-39, Volumes I, II, and III, revised as of July 1, 1979. The DOD also gives notice that the 19 Circulars are on file with the OFR.

EFFECTIVE DATE: December 31, 1979.

FOR FURTHER INFORMATION CONTACT: Brady M. Cole, CAPT, USN, Acting Director, Defense Acquisition Regulatory Council, Room 3D1080, Pentagon, Washington, D.C. 20301, Telephone: 202-697-6710.

SUPPLEMENTARY INFORMATION: The basic DAR, July 1976 edition, was adopted into the CFR on August 3, 1977 (42 FR 39213). The DAR is available to the public in two publications. The DOD publishes and distributes through the Government Printing Office (GPO) a loose-leaf edition of the DAR. Subscribers to this loose-leaf edition periodically receives amendments through DAC replacement pages.

The DAR is codified in 32 CFR Parts 1-39, Volumes I, II, and III in the CFR. The OFR last published a bound edition of the DAR, revised as of July 1, 1976. The 1979 CFR edition was prepared by photographing the DOD loose-leaf DAR, so the formats of the two publications are identical.

On November 3, 1978 (43 FR 51391), the DOD announced that it was amending the 1976 CFR edition of the DAR by incorporating changes made by DPC's 76-1 through 76-10 and that the OFR had agreed to schedule for publication a supplement to 32 CFR Parts 1-39, containing DPC's 76-1 through 76-10. At this time, the OFR also approved incorporation of the DAR into the CFR in this manner until July 1, 1979. The approval was granted until July 1, 1979, because the Office of Federal Procurement Policy was concurrently drafting the Federal Acquisition Regulation (FAR) to replace all existing systems of procurement regulations. The DOD and the OFR anticipated the issuance of the FAR during 1979. However, the drafting of the FAR has not been completed, and the FAR will not be adopted in 1979. Issuance of the FAR is now expected in late 1980. The OFR has agreed, therefore, to extend its approval of the existing procedures until July 1, 1980, and to expand the approval to include Circulars 76-11 to 76-19.

Amendments to 32 CFR Parts 1-39

Between November 1978 and July 1979 the DOD filed with the OFR Circulars 76-11 through 76-19. It became apparent that issuing a supplement containing only Circulars 76-1 through 76-10 would not represent an up-do-date DAR and that issuing a supplement containing Circulars 76-1 through 76-19 would exceed one thousand pages, and would be unwieldly for the user. Therefore, the OFR has decided to republish 32 CFR Parts 1-39 in its entirety, revised as of July 1, 1979. The July 1, 1979 edition will be prepared by photographing a collated version provided by DOD consisting of regulations from the 1976 CFR edition of ASPR and replacement pages from Circulars 76-1 through 76-19. This edition of 32 CFR Parts 1-39 will consist of three volumes divided as follows: Volume I (DAR Sections I-VI), Volume II (DAR Sections VII-XV), and Volume III (DAR Sections XVI-XXVI and Appendices A-Q). When published, the text will be identical to the loose-leaf version published and distributed through the GPO.

For the purpose of updating the 1976 CFR edition of the DAR, the DOD has filed copies of Circulars 76-1 through 76-19 with the OFR. The circulars can be inspected at the Office of the Federal Register, 1100 L Street, N.W., Washington, D.C., and at the Office of the Defense Acquisition Regulatory Council.

The DOD gave notice on November 3, 1978 (43 FR 51391) that the 1976 edition of the DAR was amended by DPC 76-1 through DPC 76-10. At this time DOD gives notice that the 1976 edition is further amended by DPC 76-11 through DPC 76-14 and DAC 76-15 through DAC 76-19, bringing 32 CFR Parts 1-39 up to date through July 1, 1979.

Therefore, the July 1, 1979 edition of the DAR is hereby promulgated in Title 32, CFR, Subchapter A, Parts 1-39, Volumes I, II, and III, thereby replacing in its entirety the 1976 edition of the ASPR previously promulgated in the CFR.

(5 U.S.C. 301, 10 U.S.C. 202, DOD Directives 5126.22 and 5000.35, and DAR 1-106).

Brady M. Cole,

Captain, SC, USN, Acting Director, Defense Acquisition, Regulatory Council.

Any amendments made to the loose-leaf editions of DAR through DAC replacement pages that are subsequent to DAC 76-19 will be published in the Federal Register as amendments to the DAR that appears in the CFR. The two publications of the DAR will be identical.

The following is a list of those DAR sections affected by Circulars 76-11 through DAC 76-19. (For a list of DAR sections affected by DPC 76-1 through 76-10, see 43 FR 53191.) These listings have been compiled by the staff of the OFR as an editorial aid to the user. Inclusion or omission of a DAR section or paragraph reference is not legally binding.

DPC 76-11

no changes

DPC 76-12

1-323
1-323.1
1-323.2
1-701.1
2-201
3-210.2
3-501
3-607.4
3-608.2
3-609
3-807.1
3-808.1
3-808.2
3-808.3
3-808.4
3-808.5
3-808.6
3-808.7
3-808.8
3-1206
3-1210
3-1300
3-1300.1
3-1300.2
3-1300.3
3-1300.4
3-1300.5
3-1300.6
3-1300.7
5-101
6-1304.2
6-1307
7-104.9
7-104.83
7-104.98
7-204.65
7-303.67
7-403.63
7-603.59
7-606.31
7-902.44
7-1903.41
7-1903.51
7-1903.57
7-1910.41
13-406
15-205.44
15-205.50
16-101.2
21-102
21-103
21-105
21-108
21-109
21-111.1
21-113
21-119
21-125
21-129
21-201
21-202
21-204.1
21-205
21-206
21-209
22-601.3
E-509.5
F-200.1057
DD Form 1057

DPC 76-13

1-307.2
1-905.4
1-1704.5
1-2207.2
2-201
3-501
5-1108.2
5-1108.3
7-104.10
7-104.37
7-204.21
7-204.27
7-204.28
7-303.24
7-403.22
7-403.23
7-603.40
7-705.8
7-705.9
16-103
26-104
E-103
E-105
E-405
E-406
E-406.1
E-407
E-410
E-500.3
E-505
E-517
E-518
E-521

DPC 76-14

1-322.1
1-322.2
1-406
1-1004
1-1004.1
1-1004.2
1-1004.3
1-1005
1-1005.1
1-1005.2
2-201
3-501
3-608.2
5-900
5-902
5-903
5-906
6-303
7-104.84
7-104.85
7-302.23
7-602.23
7-603.24
7-603.26
7-605.7
7-606.1
7-705.5
7-2002.2
7-2002.3
7-2002.4
9-107.3
9-107.6
9-107.7
9-107.8
9-109.3
12-103.1
16-401.1
16-401.2
16-402.2
18-118
18-118.1
18-118.2
18-118.3
18-118.4
18-701
18-704.5
18-704.7
18-704.9
18-706
19-403.3
25-202
25-203

DAC 76-15

1-701.1
1-704.3
1-705.4
1-706.1
1-706.7
1-800
1-801.1
1-801.2
1-802
1-803
1-806.1
1-903.1
2-407.6
7-104.20
7-606.1
7-2003.3
7-2003.4
7-2003.5
7-2003.11
7-2003.13
7-2003.21
12-604
18-209

DAC 76-16

1-315
1-324.2
1-406
1-1702.1
3-402
3-404.3
3-405.6
3-700
3-701.1
3-701.2
3-701.3
3-701.4
3-701.5
3-702
3-702.1
3-702.2
3-703
3-704.1
3-704.2
3-705
3-706
3-707
3-708
3-801.2
3-807
3-807.1
3-807.3
3-807.4
3-807.5
3-807.6
3-807.7
3-807.8
3-807.9
3-807.10
3-811
3-814
3-815
3-1204.1
3-1300.7
4-106.6
4-112
7-103.2
7-104.24
7-104.29
7-104.41
7-104.42
7-104.77
7-104.99
7-106.1
7-106.2
7-106.3
7-106.4
7-203.2
7-203.4
7-203.35
7-204.16
7-304.1
7-402.3
7-402.37
7-403.9
7-404.1
7-401
7-602.3
7-602.4
7-602.26
7-605.5
7-605.6
7-605.7
7-605.48
7-702.10
7-702.56
7-703.9
7-703.51
7-704.41
7-705.12
7-706.31
7-1902.2
7-1909.2
7-1909.30
7-1910.14
7-1910.26
7-2003.13
7-2003.43
8-206
8-217
13-102.1
15-204
15-205.1
15-205.16
15-205.22
15-205.32
15-206
16-104.4
16-206.1
16-809
16-812
18-305.1
20-903
20-904
20-1001
20-1002
20-1003
20-1004
20-1005
20-1006
20-1007
22-1007
23-202

DAC 76-17

1-108
1-109.2
1-201
1-201.14
1-201.15
1-329.4
1-340
1-406
1-703
1-1204
1-1410
1-1903
2-201
2-202.1
2-203.1
2-403
2-405
3-109
3-501
3-503
3-503.1
3-503.2
3-600
3-605.3
3-608.2
3-805.3
3-803.2
3-808.4
3-1203
3-1204.1
3-1300.1
3-1300.4
4-106.3
4-106.6
4-107
4-107.1
4-107.2
4-107.3
4-107.4
4-107.5
5-107
5-200
5-201
5-202
5-203
5-204
6-603.2
6-603.4
6-605.2
6-1305.2
6-1305.4
6-1305.5
7-103.18
7-103.27
7-103.28
7-103.29
7-104.19
7-104.21
7-104.78
7-104.93
7-108.1
7-108.2
7-109.2
7-109.3
7-203.4
7-203.18
7-203.32
7-203.33
7-204.65
7-204.66
7-302.17
7-302.30
7-302.31
7-303.63
7-402.17
7-402.34
7-402.35
7-403.15
7-403.64
7-602.22
7-602.49
7-602.51
7-603.23
7-603.60
7-603.61
7-605.19
7-605.45
7-605.46
7-606.32
7-607.13
7-607.23
7-607.24
7-702.44
7-702.53
7-702.54
7-703.36
7-703.47
7-703.49
7-704.29
7-704.37
7-704.38
7-705.34
7-706.23
7-706.26
7-706.27
7-901.12
7-901.13
7-901.29
7-901.30
7-902.45
7-1002.3
7-1301.2
7-1301.6
7-1301.8
7-1301.9
7-1302.1
7-1303.3
7-1303.4
7-1303.6
7-1701.15
7-1701.19
7-1701.20
7-1902.13
7-1902.21
7-1902.24
7-1909.14
7-1909.27
7-1909.28
7-2003.14
7-2003.51
7-2003.78
7-2003.79

7-2003.80
7-2101.29
7-2101.30
10-202.1
10-505
10-603
12-101.3
12-103.2
12-107
12-801
12-802
12-803
12-804
12-805
12-806.1
12-806.2
12-807
12-807.1
12-807.2
12-807.3
12-807.4
12-807.5
12-807.6
12-808
12-809
12-810
12-1005.3
12-1007
12-1007.1
12-1007.2
12-1007.3
12-1007.4
12-1100
12-1300
12-1301
12-1302
12-1303
12-1304
12-1305
12-1306
12-1307
12-1400
12-1401
12-1402
12-1403
12-1404
12-1405
12-1406
12-1407
13-102.1
13-301
13-405

DAC 76-18

1-201.14
1-201.15
1-701.1
1-705.4
1-707.1
1-1003.4
1-1004.2
1-1005.1
1-1005.2
1-1007.1
1-1007.3
1-1007.5
1-1405
1-2400
1-2500
1-2500.1
1-2500.2
1-2500.3
1-2500.4
1-2500.5
2-201
2-202.1
3-404.3
3.501
3-503.1
3-807.4
3-807.7
3-808.7
3-1202
3-1203
3-1204.1
3-1204.2
3-1205
3-1207
3-1208
3-1210
3-1212
3-1213
3-1214
4-107.1
4-107.5
4-803.6
5-205
6-105
6-303
6-1304.3
6-1307
7-103.1
7-103.23
7-103.27
7-104.9
7-104.19
7-104.23
7-104.35
7-104.45
7-104.78
7-104.83
7-104.87
15-203
15-205.6
15-205.9
15-205.32
15-205.34
15-205.41
15-205.48
16-103
16-820
19-403.3
19-406
21-102
21-103
21-105
21-109
21-112
21-113
21-114
21-115
21-115.1
21-115.2
21-115.3
21-116
21-117
21-120
21-122
21-123
21-124
21-125
21-128
21-129
21-130
21-131
21-132
21-133
21-135
21-136
21-137
21-138
21-201
21-202
21-204.1
21-204.2
21-205
21-209
22-602.1
23-101
24-206.5
26-404
F-200.1155
DD Form 1155
F-200.1655
7-104.99
7-203.4
7-203.8
7-204.33
7-402.3
7-402.8
7-504.2
7-602.7
7-602.37
7-603.37
7-603.40
7-603.42
7-603.50
7-607.7
7-607.13
7-607.14
7-702.12
7-901.10
7-2002.2
7-2002.3
7-2002.4
7-2003.67
7-2003.77
7-2003.80
7-2003.81
7-2003.82
9-202.2
9-202.3
9-204.2
9-205.1
9-601
9-602
9-606
10-102.4
10-103.1
10-103.2
10-103.3
10-104.1
10-201.2
12-107
12-805
12-807.1
13-302
13-404
14-306
15-205.3
15-205.9
15-205.35
15-205.37
16-401.2
16-402.2
19-104.1
19-104.2
21-131
21-133
22-108
22-600.3
23-200
24-206.3
24-208
26-103
26-104
26-105
E-503.1
E-503.2
E-503.3
E-509.5
E-511.2
E-511.3
E-511.5
E-511.6
E-512.1
E-512.2
E-512.3
E-523
E-524.1
F-200.1659
DD Form 1659
F-200.1660
DD Form 1660
F-200.2139
DD Form 2139

DAC 76-19

1-332
1-406
1-700
1-701.1
1-701.2
1-701.3
1-701.4
1-701.5
1-702
1-703
1-704
1-704.1
1-704.2
1-704.3
1-705.1
1-705.2
1-705.3
1-705.4
1-705.5
1-705.6
1-706.1
1-706.3
1-706.5
1-706.6
1-706.7
1-707
1-707.1
1-707.2
1-707.3
1-707.4
1-707.5
1-707.6
1-707.7
1-1002.1
2-201
3-501
3-603.1
3-808.8
7-104.14
7-104.36
7-2003.74

[FR Doc. 79-39765 Filed 12-28-79; 8:45 am]

BILLING CODE 3810-70-M

PANAMA CANAL COMMISSION

35 CFR Part 9

Organization, Functions, and Availability of Records—Panama Canal Commission

AGENCY: Panama Canal Commission.

ACTION: Final rule.

SUMMARY: The Panama Canal Commission's schedule of fees for search and duplication of records in response to a Freedom of Information Act request is hereby amended to reflect the current direct costs of providing those services.

EFFECTIVE DATE: December 31, 1979.

FOR FURTHER INFORMATION CONTACT: Mrs. Hazel M. Murdock, Assistant to the Secretary, Panama Canal Commission, Room 312, Pennsylvania Building, 425 13th Street, N.W., Washington, D.C. 20004. (Telephone: 202/724-0104).

SUPPLEMENTARY INFORMATION: On November 30, 1979 (44 FR 68868), the Panama Canal Commission gave notice that it proposed to amend 35 CFR 9.5, its schedule of fees for search and duplication of records in response to a Freedom of Information Act request. The notice stated that all comments received on or before December 21 would be considered. No comments were received by the agency. The amendment is, therefore, adopted without change.

The amended fee schedule reflects increases in direct costs to the Panama Canal Commission of performing certain services and sets uniform fees for other services not previously specified in the schedule, such as converting microfilm to paper copy, duplication of tape recordings, and duplication of photographs.

This agency recently revised Title 35, Code of Federal Regulations, in accordance with the requirements of the Panama Canal Act of 1979, Public Law 96-70, 93 Stat. 452, and Executive Order 12173 of November 29, 1979 (44 FR 69271). This major revision was published as a final rule on December 19, 1979 (44 FR 75306) in order to provide immediate guidance with respect to the provisions contained in the regulations, and to conform the Panama Canal regulations to the changes required by the Panama Canal Treaty of 1977 and related agreements and the Panama Canal Act of 1979, which implements the Treaty. The effective date of the revised regulation is December 31, 1979.

As part of the major revision of 35 CFR, the regulations implementing the Freedom of Information Act in this agency (Part 9, 35 CFR) were rewritten in simplified language and reorganized.

As a result of that revision, § 9.5, which contained the schedule of fees, was redesignated as § 9.11. The Panama Canal Commission determined that since the major revision was to be published as a final rule just prior to the termination of the 30-day notice period for the amended fee schedule, and since it was expected that both the proposed amended fee schedule and the major revision would take effect on December 31, 1979, there was good cause to publish the proposed amended fee schedule again in the Federal Register as a part of the major revision. This was done for the convenience of the users of the Federal Register and 35 CFR, i.e., so all amended parts of the 35 CFR would be included in one document for ease of reference and handling.

The foregoing explanation for including the new schedule of fees in the publication of the major revision prior to the termination of the 30-day notice period was inadvertently omitted from the preamble to the final rule notice published at 44 FR 75306.

§ 9.5 Redesignated as § 9.11

The amended and redesignated § 9.11 of Title 35, Code of Federal Regulations as published at 44 FR 75306 is hereby adopted, to become effective December 31, 1979.

Dated: December 21, 1979.

Thomas M. Constant,

Secretary, Panama Canal Commission.

[FR Doc. 79-39623 Filed 12-28-79; 8:45 am]

BILLING CODE 3640-01-M

ENVIRONMENTAL PROTECTION AGENCY

40 CFR Part 80

[FRL-1381-1]

Regulation of Fuel and Fuel Additives; Unleaded Gasoline Availability—Enforcement Policy

AGENCY: Environmental Protection Agency.

ACTION: Notice of Enforcement Policy.

SUMMARY: EPA will not enforce the unleaded gasoline availability requirement against retail outlets which run out of unleaded gasoline provided all pumps are attendant-operated. Further, retailers must provide notice that the retail outlets are out of unleaded gasoline, and make good faith efforts to quickly secure supplies of unleaded gasoline. By meeting these requirements, retailers may remain open and sell leaded gasoline after running out of unleaded gasoline without risk of penalty.

DATES: This policy is effective December 31, 1979.

FOR FURTHER INFORMATION CONTACT: Robert A. Weissman, Attorney, Office of Enforcement, at (202) 755-4835.

SUPPLEMENTARY INFORMATION: On January 10, 1973, the Environmental Protection Agency (EPA) promulgated a regulation requiring gasoline retail outlets with over a certain volume of business to offer for sale at least one grade of unleaded gasoline of at least 91 Research Octane Number (38 FR 1254). This regulation, if strictly enforced, would require stations which run out of unleaded gasoline but still have leaded product to sell either to stop operating the station as a gasoline retail outlet or face civil penalties for violating the availability requirement.

In the event of a gasoline shortage, EPA would like to insure that no gasoline that is available for sale to the public is unnecessarily removed from the market place. However, we are greatly concerned that a situation where retailers sell only leaded fuel is likely to lead to increased levels of use of leaded gasoline in vehicles requiring unleaded fuel, particularly if the drivers of unleaded vehicles have waited in lines and the leaded fuel is available at self-service.

To balance these concerns, EPA is today adopting a policy regarding enforcement of the availability requirement set out at 40 CFR 80.22(b). It must be emphasized that this policy is only applicable to retailers of retail outlets who have made the investment in the necessary tankage and pumps to routinely carry unleaded gasoline and who face only a temporary interruption in supply of unleaded gasoline.

Where a retail outlet has run out of unleaded gasoline and where a retailer continues to sell leaded gasoline at that outlet, EPA will not enforce the unleaded gasoline availability requirement of 40 CFR 80.22(b) against the retailer, provided (1) all pumps are attendant operated only, (2) attendants do not introduce leaded gasoline into vehicles which require unleaded gasoline, (3) notice is provided to potential customers that unleaded gasoline is not available by either (a) flying a flag consistent with Department of Energy regulation or local regulation, if applicable, or if no other regulation is applicable, (b) posting a sign clearly visible from the roadway indicating the unavailability of unleaded gasoline, and (4) the retailer makes good faith efforts to secure supplies of unleaded gasoline as soon as possible.

We will continue to actively enforce violations of the 40 CFR 80.22(a) prohibition on improper introductions of leaded fuel into vehicles which require unleaded fuel. However, adoption of the above policy will further the Agency's intent to suppress fuel switching while not significantly disrupting the marketing of gasoline.

Dated: December 20, 1979.

Barbara Blum,

Deputy Administrator.

[FR Doc. 79-39720 Filed 12-28-79; 8:45 am]

BILLING CODE 6560-01-M

FEDERAL EMERGENCY MANAGEMENT AGENCY

44 CFR Part 64

[Docket No. FEMA 5761]

Suspension of Community Eligibility Under the National Flood Insurance Program

AGENCY: Federal Insurance Administration, FEMA.

ACTION: Final rule.

SUMMARY: This rule lists communities where the sale of flood insurance, as authorized under the National Flood Insurance Program (NFIP), will be suspended because of noncompliance with the flood plain management requirements of the program.

EFFECTIVE DATES: The third date ("Susp.") listed in the fifth column.

FOR FURTHER INFORMATION CONTACT: Mr. Richard Krimm, National Flood Insurance Program, (202) 755-5581 or Toll Free Line 800-424-8872, Room 5270, 451 Seventh Street SW., Washington, DC 20410.

SUPPLEMENTARY INFORMATION: The National Flood Insurance Program (NFIP), enables property owners to purchase flood insurance at rates made reasonable through a Federal subsidy. In return, communities agree to adopt and administer local flood plain management measures aimed at protecting lives and new construction from future flooding. Section 1315 of the National Flood Insurance Act of 1968, as amended (42 U.S.C. 4022) prohibits flood insurance coverage as authorized under the National Flood Insurance Program (42 U.S.C. 4001-4128) unless an appropriate public body shall have adopted adequate flood plain management measures with effective enforcement measures. The communities listed in this notice no longer meet that statutory requirement for compliance with program regulations (44 CFR Part 59 et seq.). Accordingly, the communities are suspended on the effective date in the fifth column, so that

as of that date subsidized flood insurance is no longer available in the community.

In addition, the Federal Insurance Administrator has identified the special flood hazard areas in these communities by publishing a Flood Hazard Boundary Map. The date of the flood map, if one has been published, is indicated in the sixth column of the table. Section 202(a) of the Flood Disaster Protection Act of 1973 (Pub. L. 93–234), as amended, provides that no direct Federal financial assistance (except assistance pursuant to the Disaster Relief Act of 1974 not in connection with a flood) may legally be provided for construction or acquisition of buildings in the identified special flood hazard area of communities not participating in the NFIP, with respect to which a year has elasped since identification of the community as having flood prone areas, as shown on the Office of Federal Insurance and Hazard Mitigation's initial flood insurance map of the community. This prohibition against certain types of Federal assistance becomes effective for the communities listed on the date shown in the last column.

The Federal Insurance Administrator finds that delayed effective dates would be contrary to the public interest. The Administrator also finds that notice and public procedure under 5 U.S.C. 553(b) are impracticable and unnecessary.

In each entry, a complete chronology of effective dates appears for each listed community.

Section 64.6 is amended by adding in alphabetical sequence new entries to the table.

§ 64.6 List of suspended communities.

State	County	Location	Community No.	Effective dates of authorization/cancellation of sale of flood insurance in community	Special flood hazard area identified	Date [1]
Georgia	Douglas	do	130306	Jan. 31, 1975, emergency, Jan. 2, 1980, regular, Jan. 2, 1980, suspended.	Mar. 5, 1976	Jan. 2, 1980.
Illinois	Lake	Lindenhurst, village of	170379A	Dec. 27, 1974, emergency, Jan. 2, 1980, regular, Jan. 2, 1980, suspended.	Mar. 4, 1974 Feb. 20, 1976	Do.
Do	do	Round Lake Heights, village of	170390A	Aug. 8, 1974, emergency, Jan. 2, 1980, regular, Jan. 2, 1980, suspended.	Mar. 29, 1974 June 18, 1976	Do.
Do	Winnebago	South Beloit, city of	170725A	Mar. 25, 1974, emergency, Jan. 2, 1980, regular, Jan. 2, 1980 suspended.	June 7, 1974 July 9, 1976	Do.
Indiana	Hamilton	Cicero, town of	180320	Mar. 24, 1975, emergency, Jan. 2, 1980, regular, Jan. 2, 1980, suspended.	Feb. 1, 1974 Oct. 21, 1977	Do.
Do	Lake	New Chicago, town of	180140A	Mar. 13, 1975, emergency, Jan. 2, 1980, regular, Jan. 2, 1980, suspended.	May 31, 1974 May 21, 1976	Do.
Kansas	Douglas	Baldwin City, city of	200088A	June 23, 1975, emergency, Jan. 2, 1980, regular, Jan. 2, 1980, suspended.	Feb. 15, 1974 Nov. 7, 1975	Do.
Do	Wyandotte	do	200562A	Mar. 7, 1975, emergency, Dec. 18, 1979, regular Jan. 2, 1980, suspended.	May 6, 1977	Do.
Massachusetts	Hampshire	Granby, town of	250162A	July 3, 1975, emergency Jan. 2, 1980, regular Jan. 2, 1980, suspended.	Sept. 6, 1974 Jan. 14, 1977	Do.
Minnesota	Kittson	Hallock, city of	270226A	July 3, 1974, emergency, Jan 2, 1980, regular, Jan. 2, 1980, suspended.	May 17, 1974 May 14, 1976	Do.
Mississippi	Madison	do	280228	July 17, 1975, emergency, Jan. 2, 1980, regular, Jan. 2, 1980, suspended.	Aug. 11, 1976	Do.
Do	Newton	do	280231	Apr. 23, 1979, emergency, Jan. 2, 1980, regular, Jan. 2, 1980, suspended.	Sept 16, 1977	Do.
New Jersey	Essex	Essex Fells, borough of	340575	July 28, 1975, emergency, Jan. 2, 1980, regular, Jan. 2, 1980, suspended.	Dec. 3, 1976	Do.
Do	Camden	Runnemede, borough of	340144	Aug. 7, 1973, emergency, Jan. 2, 1980, regular, Jan. 2, 1980, suspended.	Dec. 7, 1973 June 24, 1977	Do.
New York	Albany	Watervliet, city of	360016A	Nov. 29, 1974, emergency, Jan. 2, 1980, regular, Jan. 2, 1980, suspended.	Feb. 1, 1974 Aug. 13, 1976	Do.
Do	Westchester	White Plains, city of	360935A	Oct. 20, 1972, emergency, Jan. 2, 1980, regular, Jan. 2, 1980 suspended.	Mar. 16, 1973 July 2, 1976	Do.
North Carolina	Transylvania	do	370230	Jan. 21, 1974, emergency, Jan. 2, 1980, regular, Jan 2, 1980, suspended.	Jan. 20, 1978	Do.
Ohio	Ashland	Ashland, city of	390007A	Sept. 18, 1973, emergency, Jan. 2, 1980, regular, Jan. 2, 1980, suspended.	Apr. 12, 1974 Aug. 6, 1976	Do.
Oklahoma	Sequoyah	Sallisaw, city of	400199	Jan. 30, 1974, emergency, Jan. 2, 1980, regular, Jan. 2, 1980, suspended.	Apr. 5, 1976 June 18, 1976	Do.
Pennsylvania	Delaware	Ridley Park, borough of	420430A	Aug. 29, 1974 emergency, Jan. 2, 1980, regular, Jan. 2, 1980, suspended.	July 19, 1974 June 4, 1976	Do.
West Virginia	Mason	do	540112	Apr. 25, 1975, emergency, Jan. 2, 1980, regular, Jan. 2, 1980, suspended.	Apr. 25, 1975	Do.

[1] Date certain Federal assistance no longer available in special flood hazard area.

(National Flood Insurance Act of 1968 (title XIII of the Housing and Urban Development Act of 1968); effective Jan. 28, 1969 (33 FR 17804, Nov. 28, 1968), as amended, 42 U.S.C. 4001–4128; Executive Order 12127, 44 FR 19367; and delegation of authority to Federal Insurance Administrator, 44 FR 20963)

Issued: December 21, 1979.

Charles M. Plaxico, Jr.,

Acting Federal Insurance Administrator.

[FR Doc. 79-39694 Filed 12-28-79; 8:45 am]

BILLING CODE 6718-03-M

COMMUNITY SERVICES ADMINISTRATION

45 CFR Part 1067

Revision of Subpart 1067.6 Access to Publications; Federal Register and the Code of Federal Regulations

AGENCY: Community Services Administration.

ACTION: Final rule.

SUMMARY: The Office of the Federal Register has redesignated CSA's October 1, 1979, issue of the Code of Federal Regulations as Title 45 Parts 500 to 1199 (formerly Title 45 Parts 500 to end). Therefore, CSA is amending its regulations on access to publications to reflect this change.

EFFECTIVE DATE: December 31, 1979.

FOR FURTHER INFORMATION CONTACT: Ms. Rita C. Kane, 1200 19th Street, NW., Washington, D.C. 20506, Telephone: (202) 254–5047.

45 (CFR) Subpart 1067.6—Access to Publications: Federal Register and the Code of Federal Regulations, which appeared in the Federal Register on November 26, 1979 (44 FR 67424) is amended as follows:

1. In the preamble to the document appearing on page 67424, column one, the last paragraph should read as follows:

* * * * *

Upon publication of the October 1, 1979 Volume of the Code of Federal Regulations (CFR), Title 45, Part 500 to 1199, which will be available for distribution (and purchase) in the Spring of 1980, CSA will use the CFR and the daily issues of the Federal Register as the systems for making available for public use its rules and regulations. At that time CSA will discontinue the issuance of its Instructions.

* * * * *

2. On page 67424, § 1067.6–2, paragraph (b) is revised to read as follows:

§ 1067.6–2 Policy.

* * * * *

(b) Grantees are also required to purchase the Code of Federal Regulations (CFR), Title 45, Part 500 to 1199 (only) beginning with the October 1, 1979 edition which should be available in the spring of 1980. The price of this edition and the subscription form will be published in the Federal Register. These two publications, the Federal Register and the Code of Federal Regulations will provide grantees with a complete and up-to-date set of all current CSA rules.

* * * * *

(Sec. 602, 78 Stat. 530, 42 U.S.C. 2942)

John Gabusi,

Assistant Director, Office of Community Action.

[FR Doc. 79-39613 Filed 12-28-79; 8:45 am]

BILLING CODE 6315-01-M

FEDERAL COMMUNICATIONS COMMISSION

47 CFR Ch. I

[BC Docket No. 79–62; RM–3224]

FM Assignment to Covington, Ind.

AGENCY: Federal Communications Commission.

ACTION: Report and Order.

SUMMARY: Action taken herein assigns a first Class A FM channel to Covington, Indiana, as that community's first FM assignment, in response to a petition filed by DOXA, Inc. The channel could be used to bring a first local aural broadcast service to the community.

EFFECTIVE DATE: February 4, 1980.

ADDRESS: Federal Communications Commission, Washington, D.C. 20554.

FOR FURTHER INFORMATION CONTACT: Mildred B. Nesterak, Broadcast Bureau, (202) 632–7792.

SUPPLEMENTARY INFORMATION: *Report and Order (Proceeding Terminated)*

Adopted: December 17, 1979.

Released: December 20, 1979.

In the matter of amendment of § 73.202(b), Table of Assignments, FM Broadcast Stations. (Covington, Indiana).

By the Acting Chief, Policy and Rules Division:

1. The Commission has before it a *Notice of Proposed Rule Making*, adopted March 22, 1979, 44 FR 18998, proposing the assignment of Channel 224A to Covington, Indiana. The *Notice* was issued in response to a petition filed by DOXA, Inc. ("DOXA"). Supporting comments were filed by petitioner.[1] Comments were also filed by Twin Cities Broadcasting, Inc. ("WXUS"), licensee of FM Station WXUS, Lafayette, Indiana, to which DOXA replied.[2]

2. Covington (pop. 2,641)[3], in Fountain County (pop. 18,257), is located approximately 64 kilometers (40 miles) southwest of Lafayette, Indiana, and 113 kilometers (70 miles) west northwest of Indianapolis, Indiana. There is no local aural broadcast service in Covington or Fountain County.

3. Although DOXA originally proposed the assignment on a hyphenated basis to Covington and Veedersburg, we stated in the *Notice* that we would propose the assignment to Covington, the larger community and the county seat. DOXA, in comments, states that the broadcast service it proposes would be of equal importance

[1] DOXA's comments were filed late with an acceptance request. The filing was only two days late and since there has been no objection to our acceptance of these comments, they will be accepted.

[2] DOXA's reply comments were also late-filed. Although the certificate of service indicated that a copy of WXUS's comments were mailed to DOXA, DOXA attests that it did not receive such copy. When it became aware of the need for a reply, DOXA requested that it be permitted to file late in order to determine whether any alternate channels could be assigned to Covington. We shall accept these comments since there has been no objection to our acceptance and the information will be helpful in resolving this case.

[3] Population figures are taken from the 1970 U.S. Census.

to both communities since neither one has a first local service and therefore again requests that the channel be assigned on a hyphenated basis. It contends that although the channel would be available for use at Veedersburg under Section 73.203(b) of the Rules, it is not the intent of DOXA to serve one community or the other, but both.

4. In comments, WXUS points out that it has been operating Station WXUS on Channel 224A at Lafayette, Indiana, pending a channel change made necessary by an authorization by the Commission for a new station at Munice, Indiana. The Munice station, we are told, is obligated to reimburse WXUS for a change to Channel 228A at Lafayette. See *Munice, Indiana, Report and Order*, 41 Fed. Reg. 47931 (1976). The proposed Covington assignment would be 40 kilometers (25 miles) short-spaced to the current Lafayette operation. In the meantime, WXUS urges that it not be required to change frequencies before it can be reimbursed.

5. In reply comments, DOXA states that since the use of Channel 224A at Covington is precluded for an indeterminate period, it is proposing an alternate channel, 276A, for assignment which would meet the minimum spacing requirements. It reiterates it request to have the channel assigned to Covington and Veedersburg on a hyphenate basis.

6. Because Channel 224A is not available for assignment to Covington under the present circumstances, and since DOXA has proposed a substitute channel, we are assigning Channel 276A to Covington, Indiana. We see no need to issue a further notice proposing the substitute channel since a Class A channel has already been proposed for Covington. As to DOXA's request that the assignment be made on a hyphenated basis to Covington and Veedersburg, it appears that DOXA's intent is to have its station identify with both communities. Under Section 73.1202(b)(2) of the Commission's Rules, a station may be authorized to include in its official station identification the name of an additional community or communities, but the community to which the station is licensed must be named first. DOXA could request such authorization if it becomes the ultimate licensee on Channel 276A. In any event, DOXA has not substantiated the inability of a station to support itself if identified with only one community. That is the test for being licensed on a hyphenated basis.

7. In view of the foregoing, the Commission believes the assignment of Channel 276A to Covington, Indiana, is warranted. A demand has been shown for the proposed assignment and it would provide Covington with a needed first local aural broadcast service. It can be assigned in conformity with the applicable minimum distance separation requirements.

8. Authority for the adoption of the amendment contained herein appears in Sections 4(i), 5(d)(1), 303(g) and (r) and 307(b) of the Communications Act of 1934, as amended, and Section 0.281 of the Commission's Rules.

9. Accordingly, it is ordered, That effective February 4, 1980, the FM Table of Assignments, Section 73.202(b) of the Rules, as regards Covington, Indiana, is amended to read as follows:

City	Channel No.
Covington, Indiana	276A

10. It is further ordered, That this proceeding it terminated.

11. For further information concerning this proceeding, contact Mildred B. Nesterak, Broadcast Bureau, (202) 632-7792.

(Secs. 4, 303, 307, 48 Stat., as amended, 1066, 1082, 1083; 47 U.S.C. 154, 303, 307.)

Federal Communications Commission.

Henry L. Baumann,

Acting Chief, Policy and Rules Division, Broadcast Bureau.

[FR Doc. 79-39812 Filed 12-28-79; 8:45 am]

BILLING CODE 6712-01-M

---

47 CFR Parts 0, 5, 21, 22, 23, 25, 73, 74, 78, 81, 87, 90, 94, 95, 97, and 99

[Gen. Docket No. 78-365; FCC 79-831]

Amendment to Rules Relative to the Protection of FCC Monitoring Stations From Radio Interference

AGENCY: Federal Communications Commission.

ACTION: Final rule.

SUMMARY: New rules providing exact location of FCC monitoring stations and describing, for all radio services, coordination procedures intended to protect FCC monitoring stations from strong radio signal interference.

EFFECTIVE DATE: January 31, 1980.

ADDRESSES: Federal Communications Commission, Washington, D.C. 20554.

FOR FURTHER INFORMATION CONTACT: Field Operations Bureau, (202) 632-7593—Mr. David L. Means.

In the matter of Amendments to Parts 0, 5, 21, 22, 23, 25, 73, 74, 78, 81, 87, 90, 94, 95, 97, and 99 of the Commission's Rules Relative to the Protection of FCC Monitoring Stations from Radio Interference; Gen. Docket 78-365, No. 78-365.

Report and Order

Adopted: December 10, 1979.

Released: December 27, 1979.

By the Commission:

1. The Commission adopted a Notice of Proposed Rule Making in the above entitled matter on November 6, 1978, which was published in the Federal Register on November 20, 1978 (43 FR 54106). Interested parties were invited to file comments on or before January 22, 1979, and reply comments on or before February 21, 1979. The time for filing comments and reply comments was subsequently extended to March 22, 1979, and April 23, 1979, respectively.

2. The Notice proposed to provide, within Part 0 of the Rules, the precise location of each of the Commission's 13 monitoring stations, and also to provide, within the body of the Rules for each of the various radio services, a non-mandatory procedure for coordination prior to filing a license application with the Commission. The procedure would notify potential applicants for transmitting facilities near monitoring stations of the need to protect the stations from harmful interference. The rules would also publish the existing practice of FCC case-by-case review of certain applications for such facilities. A major intent of the Notice and these new rules is to let the public know what FCC procedures are, and to suggest a way of expediting FCC processing in the event of some problem.

3. Both formal and informal comments were received from numerous individuals and organizations. As the comments received were so numerous, it is not practicable to discuss each herein. However, every comment has been given careful consideration by the Commission, and the substance of every argument raised has been included and dealt with.

4. A great many of the comments were from radio amateurs and amateur organizations which, by their basic misinterpretation of the scope of the rulemaking, appear not to have actually read the Notice. It is suspected that they were moved to comment on this proceeding by an editorial entitled "Clouds on the Horizon" in the "It Seems to Us . . ." section of the January, 1979, issue of *QST* magazine, a publication of the American Radio Relay League, Inc., which is widely read in amateur circles. This editorial omitted any mention of the fact that the proposed rules changes applied to all radio services, possibly giving the impression that it applied only to amateurs. This is evidenced by the number of individual amateur respondents who complained that the

Amateur Radio Service is being singled out for special treatment. Had they read the actual Notice, it would have been obvious that the rule making applies to all services. Several of these respondents appeared to be commenting on the editorial, rather than the substantive issues of the rule making. The American Radio Relay League, Inc., in its January 8, 1979, petition to the Commission for an extension of time in which to file comments, stated that "the release date of the Notice of Proposed Rule Making . . . was too late to permit publication of the notice or a comprehensive summary in the January, 1979, issue of the League's monthly journal, *QST*. A last-minute change permitted only a brief eleven-line comment in that issue." The above mentioned full-page editorial appeared in that same issue, in addition to the 11 line comment.

5. All but 13 of the 89 comments and one reply comment were identifiable as being written by or in behalf of radio amateurs or radio amateur organizations. Included among these were petitions signed by 180 licensed amateurs and 12 others. Opposition from the amateur community to the rule making in its proposed form was almost unanimous. Most urged deletion of Part 97 from those Rule parts affected by the proposal, while many others were altogether opposed to the rule making. A few suggested other specific changes.

6. It is obvious from the comments that the Notice of Proposed Rule Making struck an emotional chord in the amateur community, with a variety of objections raised on philosophical, as well as technical, issues. The predominant argument in opposition to the rule making is that at least some of the Commission's 13 monitoring stations are poorly located. Most respondents feel that the problem of the deteriorating ambient electromagnetic environment around the monitoring stations would be best solved by moving them to more remote sites, rather than by placing an "additional" regulatory burden on amateur licensees. Similar views were expressed by most non-amateur respondents. While it is true that moving monitoring stations to less populated areas would, in some instances, reduce the strong-signal and wideband noise interference problems, it may, for other reasons, reduce their overall ability to carry out their intended functions. Selection of monitoring station locations involves a carefully considered compromise of many factors: land availability and cost, site suitability for long range direction finder installations, ground conductivity, direction finding baselines, and, of course, the electromagnetic environment. The present monitoring station sites were chosen because they presented, at the time they were chosen, a nearly optimal compromise of these factors. Several respondents suggested that "profits" from the sale of valuable, presently-owned land could be used to buy new land and finance the move. However, the Commission is not permitted by law to sell real property, but must declare it as excess to the General Services Administration which, in turn, makes it available first to other Federal agencies, then to state agencies, local governments, and finally to the public if no government entity is interested. Any receipts for sale of such property, absent special Congressional authorization, do not go to the Commission, but rather directly to the U.S. Treasury. 40 U.S.C. 304a, 471–485. Any funds for moving monitoring stations would have to come from existing appropriations which are already strained to their limits by ongoing essential programs. Considering the great cost to the public that moving each of these monitoring stations would entail (1 to 10 million dollars, depending on the location), we believe that the slight burden this rule making would impose on radio licensees does not warrant moving the monitoring stations. Future monitoring stations would certainly be located with the goal of minimizing the total ambient field in mind, while, as in the past, balancing this goal against the other critical factors.

7. Many of the respondents from the amateur community feel that this rule making runs contrary to the spirit of deregulation which has been prevalent in the Amateur Radio Service in the past few years. They are pointing out the fact the Commission already has existing rules intended to prevent interference and the authority to modify licenses, which should be sufficient to protect the monitoring station, if exercised. These respondents seem to be missing the point we attempted to make in paragraphs 4 and 5 of the Notice, namely that the Commission is well aware of the rules and authority at its disposal and has routinely exercised this authority over the past three decades. *This rule making does not give the Commission any new authority or create any new regulatory requirements*, but rather, *it publishes notification* to potential applicants that the Commission may place limitations on stations which may interfere with monitoring stations and only *recommends* that potential applicants consult the Field Operations Bureau if they expect the field strength from their facility will exceed 10 mV/m over a monitoring station. For those having no way of estimating their field, a suggested guide for determining whether coordination is recommended is provided. In this light, we fail to see how the proposed rule making runs contrary to the spirit of deregulation.

8. Some comments from amateurs objected to lumping the Amateur Radio Service into the same rule wording as broadcasters and other commercial radio services, pointing out that relatively low maximum power limitations, widespread use of single-sideband/suppressed carrier emissions, relatively low duty cycle of individual transmitter operation, and widespread use of directional antennas make the potential for interference from the Amateur Radio Service quite low. This is quite true. Indeed, several respondents pointed out that the Commission, in response to a Freedom of Information Act query, was unable to produce any documented evidence of amateur interference to monitoring stations. Concerns were also expressed that the logistics of implementing the coordination scheme as it appears in the Notice would be incompatible with the amateur licensing structure which permits much flexibility in transmitting facilities, and would impair the rapid establishment of disaster communications networks. Most amateur respondents stressed the excellent record of cooperation from amateurs, and therefore suggested that the rule making is not needed in the Amateur Radio Service. Taking these arguments collectively, the Commission agrees that the Amateur Radio Service would most appropriately be treated differently from the commercial users. Therefore, the rule making is amended to recommend coordination only from those amateurs proposing a transmitting facility to be located within one mile of any monitoring station.

9. Similarly, several respondents urged that the other Personal Radio Services also not be lumped with commercial services for the purpose of this rule making. These include the General Mobile Radio Service, the Radio Control Service, and the Citizens Band Radio Service. The point is moot for the latter two services, as all of the stations in these services are considered mobiles and are therefore excluded from the proposed rule. Because of the typically high antenna gains, and moderate output power of fixed General Mobile Radio Service stations, we believe the potential for interference from a nearby station in this service is sufficiently high

to warrant applying the same rule language to them as the commercial services.

10. The National Association of Broadcasters, the American Broadcasting Companies, Inc., and numerous amateur respondents suggested that the Commission's interference problems may be due, at least in part, to using less than state-of-the-art receiving equipment and interference rejection techniques, and that the Commission may be attempting to unnecessarily place the burden of its interference problems on the spectrum users. Several respondents suggest that the coordination threshold value of 10 mV/m may be unnecessarily low for that reason. This is not the case. The Commission's monitoring stations are using top quality, state-of-the-art equipment, built to military specifications and selected with interference rejection capability as a primary consideration, for their primary receivers. Commission field engineers are well aware of, and are using where practicable, filtering, preselection, and directional antenna techniques to minimize unwanted signals.

11. Many of the respondents have approached the 10 mV/m coordination threshold and the suggested guidelines citing power and distance as though they were absolute upper limits on the amount of signal a Commission monitoring station can tolerate, and therefore will allow. Again, this is not the case. The Commission would simply like to be aware of plans to build transmitting facilities which would produce high signal levels in order that it may have a chance to review the proposals on a case-by-case basis so that potential problems might be detected before the applicant goes to the time, effort, and possible expense of filing a formal application. The amount of signal a given monitoring station can tolerate without actual interference at a given time and at a given frequency varies considerably and is influenced not only by the strength of a single signal, but also by the root-sum-square value of all the signals impinging upon it at a given time. A blanket set of guidelines capable of predicting whether an applicant's signal will actually cause harmful interference would be incredibly complex, if at all possible to derive.

12. Two respondents, the Johns Hopkins University Applied Physics Laboratory Amateur Radio Club and Thomas A. Pendleton, went to considerable lengths to derive technical examples that show that, under certain circumstances, stations within the recommended coordination distances may produce a field of less than 10 mV/m over the monitoring stations and stations beyond the distances may produce a field greater than 10 mV/m. Other respondents pointed out the same phenomena with less sophisticated examples. Their examples are generally technically valid, but they seem to have missed the point that the Commission is merely establishing simple guidelines for the public's benefit and publishing the fact that applications and licenses are reviewed anyway. We fully realize that the recommended power and distance guidelines do not in every case directly correlate to the 10 mV/m guideline, but it is not absolutely critical to our intentions that they do so. These simple guidelines will allow the applicant who has the technical sophistication to calculate the expected field strength to enable a decision as to whether or not he or she might coordinate, and will also allow the applicant who lacks this ability to make the same decision. Once this less technically sophisticated applicant has contacted us, the Commission staff can easily calculate the expected field.

13. The Johns Hopkins University Applied Physics Laboratory urged that governmentally sponsored experimental activities be exempted from the rule making because of their belief that the proposed rule would impose a burden on their own as well as the Commission's staff. As the communication (phone or letter) and calculations required for coordination are minimal in the great majority of cases, and considering the fact that experimental radiators often radiate continuously and therefore may have a high potential for causing harmful interference, we believe that such a blanket exemption is not warranted.

14. The American Telephone and Telegraph Company pointed out that, as the Commission does not ordinarily monitor frequencies above 1000 MHz from fixed locations (with the exception of facilities monitoring satellite transmissions), coordination above this frequency is unnecessary. The Commission agrees and has amended the language of the rule making to exclude transmitting facilities which operate above 1000 MHz, except where in the vicinity of a monitoring station which has been designated as regularly involved in satellite monitoring activity. Only one monitoring station is presently so designated; satellite monitoring functions are planned for at least two others in several years, at which time the appropriate editorial changes will be made.

15. AT&T and several other respondents also pointed out that the proposed rule language recommended coordination by all applicants for operation in the vicinity of a monitoring station and did not discriminate as to whether such applications were for new or changed facilities, or merely renewal applications. AT&T proposed that only new stations or those seeking an increase in power above that previously authorized should coordinate. We agree in principle, however, we believe it is more appropriate to use changes in field strength produced over the monitoring station as a criterion. The rule language in the radio services other than amateur, therefore, has been modified to recommend coordination only for those applicants requesting authority for new transmitting facilities or a change in facilities which would increase the field strength over the monitoring station. In the Amateur Radio Service, where the licensing structure does not authorize specific transmitting facilities, we have adopted appropriate language suggesting coordination before new stations are activated and before any changes are made in the transmitting facility which would increase its field strength over the monitoring station.

16. Section 90.177(d) has been created to incorporate deleted Sections 89.15(f), 91.8(n), and 93.9(d) because of the consolidation of former Rule Parts 89, 91, and 93 into Part 90 since the release of the Notice of Proposed Rule Making.

17. For further information on this Report and Order, or explanation of the proceedings, contact David L. Means, Engineering Division, telephone 632-7593.

18. We find the attached amendments to the Rules are necessary and desirable for the execution of the Commission's duties. Authority for adoption of these amendments is contained in Sections 4(i) and 303 of the Communications Act of 1934, as amended.

19. Accordingly, *It is ordered*, that, effective January 31, 1980, Parts 0, 5, 21, 22, 23, 25, 73, 74, 78, 81, 87, 90, 94, 95, 97, and 99 of the Commission's Rules *are amended* as set forth in the attached Appendix.

20. *It is further ordered*, that this proceeding is terminated.

Federal Communications Commission.

(Secs. 4, 303, 48 Stat., as amended, 1066, 1082; 47 U.S.C. 154, 303)

William J. Tricarico,

Secretary.

Appendix

1. Part O of the Commission's Rules is amended by revising Section 0.121(c) as follows:

§ 0.121 Location of field installations.

* * * * *

(c) . . . "Monitoring stations are located at the following addresses and geographical coordinates:

. . . Allegan, Michigan 49010
42°36'20"N. Latitude
85°57'20"W. Longitude
. . . Anchorage, Alaska 99502
61°09'43"N. Latitude
149°59'55"W. Longitude
. . . Belfast, Maine 04915
44°26'42"N. Latitude
69°04'58"W. Longitude
. . . Canadiagua, New York (Delete Entire Entry)
. . . Chillicothe, Ohio (Delete Entire Entry)
. . . Douglas, Arizona 85607
31°30'06"N. Latitude
109°39'10"W. Longitude
. . . Ferndale, Washington 98240
48°57'21"N. Latitude
122°33'13"W. Longitude
. . . Fort Lauderdale, Florida 33314
26°06'08"N. Latitude
80°16'42"W. Longitude
. . . Grand Island, Nebraska 68801
40°55'24"N. Latitude
98°25'59"W. Longitude
. . . Kingsville, Texas 78363
27°26'29"N. Latitude
97°53'00"W. Longitude
. . . Laurel, Maryland 20810*
39°09'54" N. Latitude
76°49'17" W. Longitude
. . . Livermore, California 94550
37°43'30" N. Latitude
121°45'12" W. Longitude
. . . Powder Springs, Georgia 30073
33°51'44" N. Latitude
84°43'26" W. Longitude
. . . Sabana Seca, Puerto Rico 00749
18°27'23" N. Latitude
66°13'37" W. Longitude
. . . Waipahu, Hawaii 96797
21°22'45" N. Latitude
157°59'54" W. Longitude

§§ 5.67, 21.113, 22.113, 23.20, 25.203, 73.1030, 74.12, 78.19, 81.31, 87.31, 90.117, 94.25, 95.17, 99.11 [Amended]

2. The Commission's Rules are amended by inserting new §§ 5.67(d), 21.113(c), 22.113(c), 23.20(e), 25.203(h), 73.1030(c), 74.12(d), 78.19(f), 81.31(c), 87.31(d), 90.117(d), 94.25(i), 95.17(f), 99.11(i), each of which will read as follows:

* * * * *

Protection for Federal Communications Commission monitoring stations:

(1) Applicants in the vicinity of an FCC monitoring station for a radio station authorization to operate new transmitting facilities or changed transmitting facilities which would increase the field strength produced over the monitoring station over that previously authorized are advised to give consideration, prior to filing applications, to the possible need to protect the FCC stations from harmful interference. Geographical coordinates of the facilities which require protection are listed in Section 0.121(c) of the Commission's Rules. Applications for stations (except mobile stations) which will produce on any frequency a direct wave fundamental field strength of *greater than 10 mV/m* in the authorized bandwidth of service (−65.8 dBW/m² power flux density assuming a free space characteristic impedance of 120 ohms) at the referenced coordinates, may be examined to determine extent of possible interference. Depending on the theoretical field strength value and existing root-sum-square or other ambient radio field signal levels at the indicated coordinates, a clause protecting the monitoring station may be added to the station authorization.

(2) In the event that calculated value of expected field exceeds 10 mV/m (−65.8 dBW/m²) at the reference coordinates, or if there is any question whether field strength levels might exceed the threshold value, advance consultation with the FCC to discuss any protection necessary should be considered. Prospective applicants may communicate with: Chief, Field Operations Bureau, Federal Communications Commission, Washington, D.C. 20554, Telephone (202) 632-6980.

(3) Advance consultation is suggested particularly for those applicants who have no reliable data which indicates whether the field strength or power flux density figure indicated would be exceeded by their proposed radio facilities (except mobile stations). In such instances, the following is a suggested guide for determining whether an applicant should coordinate:

(i) All stations within 2.4 kilometers (1.5 statute miles);

(ii) Stations within 4.8 kilometers (3 statute miles) with 50 watts or more average effective radiated power (ERP) in the primary plane of polarization in the azimuthal direction of the Monitoring Stations.

(iii) Stations within 16 kilometers (10 statute miles) with 1 kW or more average ERP in the primary plane of polarization in the azimuthal direction of the Monitoring Station;

(iv) Stations within 80 kilometers (50 statute miles) with 25 kW or more average ERP in the primary plane of polarization in the azimuthal direction of the Monitoring Station;

(4) Advance coordination for stations operating above 1000 MHz is recommended only where the proposed station is in the vicinity of a monitoring station designated as a satellite monitoring facility in Section 0.121(c) of the Commission's Rules and also meets the criteria outlined in paragraphs (2) and (3) above.

(5) The Commission will not screen applications to determine whether advance consultation has taken place. However, applicants are advised that such consultation can avoid objections from the Federal Communications Commission or modification of any authorization which will cause harmful interference.

3. Part 97 of the Commission's Rules is amended by inserting new Section 97.41(d), as follows:

§ 97.41 Applications for station license.

* * * * *

(d) Protection for Federal Communications Commission Monitoring Stations:

(1) Applicants for an amateur radio station license to operate in the vicinity of an FCC monitoring station are advised to give consideration, prior to filing applications, to the possible need to protect the FCC stations from harmful interference. Geographical coordinates of the facilities which require protection are listed in Section 0.121(c) of the Commission's Rules. Applications for stations (except mobile stations) in the vicinity of monitoring stations may be reviewed by Commission staff on a case-by-case basis to determine the potential for harmful interference to the monitoring station. Depending on the theoretical field strength value and existing root-sum-square or other ambient radio field signal levels at the indicated coordinates, a clause protecting the monitoring station may be added to the station license.

(2) Advance consultation with the Commission is suggested prior to filing an initial application for station license if the proposed station will be located within one mile of any of the above-referenced monitoring station coordinates and is to be operated on frequencies below 1000 MHz. Such consultations are also suggested for proposed stations operating above 1000 MHz if they are to be located within one mile of any monitoring station designated in Section 0.121(c) as a satellite monitoring facility.

(3) Regardless of any coordination prior to filing initial applications, it is suggested that licensees within one mile of a monitoring station consult the Commission before initiating any changes in the station which would increase the field strength produced over the monitoring station.

(4) Applicants and licensees desiring such consultations should communicate with: Chief, Field Operations Bureau,

*Satellite Monitoring Facility.

Federal Communications Commission, Washington, D.C. 20554, Telephone (202) 632-6980.

(5) The Commission will not screen applications to determine whether advance consultation has taken place. However, applicants are advised that such consultation can avoid objections from the Federal Communications Commission or modification of any authorization which will cause harmful interference.

[FR Doc. 79-39813 Filed 12-28-79; 8:45 am]
BILLING CODE 6712-01-M

DEPARTMENT OF THE INTERIOR

Fish and Wildlife Service

50 CFR Part 26

Opening of Chincoteague National Wildlife Refuge to Public Access, Use and Recreation

AGENCY: United States Fish and Wildlife Service, Department of the Interior.

ACTION: Special regulation.

SUMMARY: The Director has determined that the opening to public access, use and recreation of Chincoteague National Wildlife Refuge is compatible with the objectives for which the area was established and will provide additional recreational opportunity to the public through a non-consumptive use. This document amends and completely replaces the special regulations governing this use published on page 10925, Federal Register Volume 43, No. 52, Thursday, March 16, 1978.

DATES: January 25, 1980 through December 31, 1982.

ADDRESSES: Contact the Refuge Manager at the address and/or telephone number listed below in the body of Special Regulations.

FOR FURTHER INFORMATION CONTACT: Howard N. Larsen, Regional Director, U.S. Fish and Wildlife Service, One Gateway Center, Suite 700, Newton Corner, Massachusetts 02158, (617-965-5100 Ext. 200).

SUPPLEMENTARY INFORMATION: Public access, use and recreation is permitted on Chincoteague National Wildlife Refuge in accordance with 50 CFR 26 and the following Special Regulations. Portions of the refuge which are open to public access, use and recreation are designated by signs and/or shown on maps available from addresses indicated below. No vehicle travel is permitted except on designated roads and trails. Special regulations applying to Chincoteague Refuge are listed on leaflets available at refuge headquarters and from the Regional Director, U.S. Fish and Wildlife Service, One Gateway Center, Suite 700, Newton Corner, Massachusetts 02158.

The Refuge Recreation Act of 1962 (16 U.S.C. 460k) authorizes the Secretary of the Interior to administer such areas for public recreation as an appropriate incidental or secondary use only to the extent that it is practicable and not inconsistent with the primary objective for which the area was established. In addition, the Refuge Recreation Act requires (1) that any recreational use permitted will not interfere with the primary purpose for which the area was established; and (2) that funds are available for the development, operation, and maintenance of the permitted forms of recreation.

The recreational use authorized by these regulations will not interfere with the primary purposes for which these National Wildlife Refuges were established. This determination is based upon consideration of among other things, the Service's Final Environmental Statement on the Operation of the National Wildlife Refuge System published in November 1976. Funds are available for the administration of the recreational activities permitted by these regulations.

Public entry shall be in accordance with all applicable Federal and State laws and regulations subject to the following special regulations:

§ 26.34 Special regulations; public access use and recreation; for individual wildlife refuge areas.

Public access, use and recreation is permitted on the Chincoteague National Wildlife Refuge, P.O. Box 62, Chincoteague, Virginia 23336. Contact J. C. Appel, Refuge Manager at 804-336-6122. Special Conditions: Entry into the refuge is permitted between the hours of 4:00 AM to 10:00 PM daily from April 1 to November 30 and from one-half hour before sunrise to one-half hour after sunset from December 1 to March 31 for the purposes of sightseeing, nature study, wildlife observation, photography, hiking, beachcombing, kite flying, sunbathing and fishing, including clamming and crabbing, as posted. Swimming and surfing are permitted as posted on the ocean beach. Fishing, kite flying, and possession of glass containers are prohibited within the protected beach areas. The use or possession of metal detectors is not permitted on the refuge. Entry into the refuge by boat is permitted at the designated public use areas at Tom's Cove Hook and the public use area operated by the Town of Chincoteague at Assateague Point. Picknicking and contained fires are permitted at Tom's Cove Hook in designated areas. Open fires by special permit only. All fires must be extinguished by water. Operation of registered motor vehicles and bicycles is permitted on designated access roads, trails, and parking areas. No vehicle may be left on the area during closed hours except by special permit. Motorcycles or mopeds with motor in operation are not permitted on the Wildlife Drive or on other trails designated for foot or bicycle use. The use of mopeds or motorized bicycles shall be governed as follows: as a bicycle when motor is not in operation; as a motorcycle when motor is in operation; the methods of operation, equipment, license and registration requirements shall be the same as those set by the State of Virginia. Riding of horses and other saddle animals is permitted only along the shoulder of the access road to the Coast Guard crossover and thence only within designated areas along the beach. Pets are not permitted on the refuge. Off-road travel by oversand vehicles is permitted only on designated routes within the public use areas at Tom's Cove Hook. Driving so as to cut circles or otherwise needlessly deface the sand dunes or vegetation is prohibited. Speed may not exceed 25 miles per hour. When approaching or passing within 100 feet of a pedestrian or person on horseback, speed must be reduced to 15 miles per hour. Pedestrians and horseback riders always have the right-of-way. Oversand vehicles may not be used to tow persons on any recreational device over sand, or in the water or air. An annual permit at a fee of $5.00 is required for oversand vehicle use. Such permits are not transferable, shall be displayed as directed by the refuge manager, and shall be valid from April 15 to April 14 of the following year. All oversand vehicles must conform to applicable State laws having to do with licensing, registering, inspecting and insuring of such vehicles. Motorcycles and mopeds must remain on designated access roads and are not permitted in oversand vehicle areas. All oversand vehicles must carry at all times on the beach: shovel, jack, tow rope or chain, board or similar support for the jack and low pressure tire gauge. No permit will be issued for a vehicle which does not meet the following standards:

On four-wheel-drive vehicles:

Maximum vehicle length	26 feet.
Maximum vehicle width	8 feet.
Minimum ground clearance	7 inches.
Gross vehicle weight rating may not exceed	10,000 lbs.
Maximum number of axles	2.
Maximum number of wheels per axle	2.
Minimum number of wheels	4.

On two-wheel drive vehicles in addition to the seven items listed above: Minimum width of tire contact on the sand—8 in. each wheel. Tires with regular mud/snow treads are not acceptable. The refuge manager may issue a single trip permit for a vehicle of greater weight or length when such use is not inconsistent with the purposes of the regulations. Forty-two (42) oversand vehicles are permitted in the oversand zone. The refuge manager may temporarily close or limit access to the beach when this level is reached. Special event permits may be issued by the refuge manager. Oversand vehicle permits issued by the National Park Service for operation on the Assateague Island National Seashore will also be honored for operation on the designated oversand vehicle routes within the public use areas at Tom's Cove Hook.

Fishermen who hold special overnight beach-fishing permits may remain on the refuge during closed hours on the dates for which such permit is issued. At least one member of the fishing party must be actively engaged in fishing at all times while on the refuge, under the terms of the permit. Organized youth-group and backpack camping is permitted by advance reservation only. Daily fee for youth-group camping is $3.00 per site.

On that portion of the Chincoteague National Wildlife Refuge known as Tom's Cove Hook and described as the area bounded on the north by the wildlife fence adjacent to the main parking lot, on the east and south by the Atlantic Ocean extending to Fishing Point, and on the west by the waters of Tom's Cove to and along the canal in Swan Cove adjacent to the main parking lot, authorized National Park Service personnel may enforce the above regulations utilizing policies, procedures of the Assateague Island National Seashore, or if properly deputized, may utilize policies, procedures and authorities normally associated with law enforcement procedures of the Chincoteague National Wildlife Refuge.

The provisions of this special regulation supplement the regulations which govern public access, use and recreation on wildlife refuge areas generally which are set forth in Title 50, Code of Federal Regulations, Part 26. The public is invited to offer suggestions and comments at any time.

Note.—The Department of the Interior has determined that this document is not a significant rule and does not require a regulatory analysis under Executive Order 12044 and 43 CFR Part 14.

Howard D. Woon,

Acting Regional Director, U.S. Fish and Wildlife Service.

December 18, 1979.

[FR Doc. 79-39824 Filed 12-28-79; 8:45 am]

BILLING CODE 4310-55-M

---

50 CFR Part 26

Public Entry and Use of Certain National Wildlife Refuges in Oklahoma and Texas

AGENCY: U.S. Fish and Wildlife Service, Department of the Interior.

ACTION: Special regulations.

SUMMARY: The Director has determined that the opening to public access, use and recreation of certain National Wildlife Refuges in Oklahoma and Texas is compatible with the objectives for which these areas were established, and will provide additional recreational opportunity to the public through a nonconsumptive use. This document establishes special regulations effective for the upcoming public entry and use season.

DATES: January 1, 1980, through December 31, 1980.

FOR FURTHER INFORMATION CONTACT: The Refuge Manager at the address and/or telephone number listed below in the body of these Special Regulations.

General

Public access, use, and recreation is permitted on the National Wildlife Refuges indicated below in accordance with 50 CFR 26 and the following Special Regulations. Portions of refuges which are open to public access, use and recreation are designated by signs and/or delineated on maps available from the address indicated below.

No vehicle travel is permitted except on designated, maintained roads and trails. Special conditions applying to individual refuges are listed on leaflets available at refuge headquarters and from the office of the Area Manager, U.S. Fish and Wildlife Service, 300 E. 8th Street, Room G-121, Austin, Texas 78701.

The Refuge Recreation Act of 1962 (16 U.S.C. 460K) authorizes the Secretary of the Interior to administer such areas for public recreation as an appropriate incidental or secondary use only to the extent that it is practicable and not inconsistent with the primary objectives for which the area was established. In addition, the Refuge Recreation Act requires (1) that such recreational use will not interfere with the primary purpose for which the areas were established, and (2) that funds are available for the development, operation, and maintenance of the permitted forms of recreation.

The recreational use authorized by these regulations will not interfere with the primary purposes for which these National Wildlife Refuges were established. This determination is based upon consideration of, among other things, the Service's Final Environmental Statement on the Operation of the National Wildlife Refuge System published in November 1976. Funds are available for the administration of the recreational activities permitted by these regulations.

Public entry shall be in accordance with all applicable Federal and State laws and regulations subject to the following conditions:

§ 26.34 Special regulations; public access, use and recreation; for individual wildlife refuge areas.

Oklahoma

Salt Plains National Wildlife Refuge, Route 1, Box 76, Jet, Oklahoma 73749, telephone 405-626-4794.

Special conditions: (1) The public is permitted to enter upon the Great Salt Plains from the west along designated routes of travel to collect gypsum (selenite) crystals from April 1 through October 15, 1980, and only on Saturdays, Sundays, and holidays. (2) For the purpose of collecting selenite crystals, vehicles will be allowed only along such travel lands and parking areas as are posted for such activity. (3) Each individual may collect for his/her personal use up to a maximum of 10 pounds plus one selenite crystal or selenite crystal cluster per day. (4) Digging for selenite crystals will be confined to areas posted for such activity.

Sequoyah National Wildlife Refuge, P.O. Box 695, Vian, Oklahoma, 74962, telephone 918-773-5251. Public Entry and Use.

Special conditions: (1) An area of approximately 2,200 acres, south of Vian Creek and east of the refuge tour road shall be closed, as posted, to all public access during the periods January 1 through March 15, 1980, inclusive and October 1 through December 31, 1980, inclusive. This land is set aside to provide an area of minimum disturbance for waterfowl and other wildlife during the winter months. (2) Some refuge roads may be closed to vehicle entry from January 1 through March 15, 1980, and from October 1 through December 31, 1980, as posted, to prevent disturbance of wintering and migrating

waterfowl. (3) Sightseeing, nature observation, photography and hiking are permitted. (4) Picnicking is permitted only at the Vian Creek Recreation Area. Picnic fires may be built at the recreation area only in fire grills provided or in camp stoves or charcoal grills. (5) Overnight camping is not permitted except for youth conservation groups supervised by adults. Permits must be obtained in advance from the Refuge Manager. All other recreational uses are restricted to the period 5 a.m. to 9 p.m. daily. (6) Firearms are prohibited except during authorized hunting seasons when only shotguns are permitted. Firearms being transported in a motor vehicle must be unloaded and dismantled or cased. Possession of any firearm on the refuge at night or in refuge areas closed to hunting is prohibited. (7) Boating is permitted in accordance with Federal and State regulations. (8) Waterskiing is prohibited in all refuge waters. (9) Pets must be confined or kept on a leash, not to exceed 10 feet in length, one end of which must be secured to restrict the movement of the pet. Dogs may be used for hunting in accordance with refuge hunting regulations. (10) Pecan picking is limited to one gallon per person per day.

Tishomingo National Wildlife Refuge, P.O. Box 248, Tishomingo, Oklahoma 73460, telephone 405–371–2402. Public Entry and Use.

Special Conditions: (1) Portions of the Tishomingo National Wildlife Refuge are open to: wildlife observation, photography, sightseeing, hiking, fishing and boating, picnicking and camping incidental to wildlife oriented activities as posted and/or indicated on the refuge leaflet and map. (2) Camping is permitted only in designated areas. Individuals and/or camping facilities are limited to 3 consecutive camping days in the area near headquarters, to 9 consecutive camping days elsewhere, and to a total of 18 camping days during the calendar year. (3) During the periods of January 1, 1980, through February 29, 1980, and October 1, 1980, through December 31, 1980, the area known as the Tishomingo Wildlife Management Unit is closed to all public use activities except those specific hunting activities as may be designated. (4) Boating on Refuge water other than Lake Texoma and the Washita River is limited to no-wake speeds. (5) Pets must be confined or kept on a leash, not to exceed 10 feet in length, one end of which must be secured to restrict the movement of the pet. Pets must be prevented from harassing or disturbing wildlife or the visiting public. (6) The Refuge will be closed to all general recreational uses during the special, controlled deer hunts in the fall as posted.

Washita National Wildlife Refuge, Route 2, Box 100, Butler, Oklahoma 73625, telephone 405–473–2205. Public Entry and Use.

Special conditions: (1) Wildlife/wildland observation and photography are permitted from the observation platform located in Owl Cove Recreation Area and from vehicles using established routes of travel. Visitors may walk into other areas of the refuge during the public use season, from April 1 through October 14, 1980. (2) Parking is permitted only in locations designated by signs in hunter access and recreation areas. (3) Boating is permitted from April 1 through October 14, 1980. (4) Swimming, waterskiing and overnight camping are prohibited. (5) Overnight stays for organized youth and education groups, with adult supervision, involved in wildlife/wildland-associated activities are permitted. (6) Camp stoves, charcoal burners and portable heaters may be used in recreational areas. Open fires are prohibited. (7) Pets must be confined or kept on a leash, not to exceed 10 feet in length, one end of which must be secured to restrict the movement of the pet.

Wichita Mountains Wildlife Refuge, P.O. Box 448, Cache, Oklahoma 73527, telephone 405–429–3222. Public Entry and Use.

Special Conditions: (1) Sightseeing, nature observation, and photography are permitted only during daylight hours. (2) Hiking is permitted during daylight hours only. (3) Camping is permitted only in those recreation areas that are designated for that activity. (4) Any activity that emits sound beyond the immediate campsite between the hours of 10:00 p.m. and 8:00 a.m. is prohibited. (5) No person other than campers shall enter or remain in a camping area between the hours of 10:00 p.m. and 6:00 a.m. (6) No person shall use electrical speakers at a volume which emits sound beyond the individual camp or picnic site without the permission of the refuge manager. (7) Exceeding posted capacities is prohibited. A written permit is required for stays exceeding 7 days. (8) Backcountry camping is permitted in the Charons Gardens Wilderness Area by permit only. Length of stay is limited to 3 days. Inquire at Refuge office for further information. Special conditions may be set by Refuge Manager which may include areas for camping, equipment used and prohibition of open fires. (9) Fires are prohibited, except in those recreation areas where camping or picnicking is permitted. They must be built in grates and grills provided for that purpose. Dead fallen timber may be used. Fires must not be left unattended and must be completely extinguished before leaving the area. During periods of very high fire danger, open fires are prohibited. (10) Picnicking is allowed only in recreation areas that are designated for that activity. (11) Gasoline, electric, oar, or handpowered boating is permitted only on Elmer Thomas Lake; handpowered boats only on Jed Johnson, Rush, Quanah Parker and French Lakes. Boating is prohibited in marked scuba diving and swimming areas. State and Federal boating regulations apply. Fort Sill regulations apply on the military portion of Elmer Thomas Lake. Water skiing is prohibited. All floating devices are prohibited, except those permitted in boating, swimming, scuba diving, and sport fishing regulations. (12) Swimming, wading, and snorkeling are prohibited, except at the designated swimming beach on Elmer Thomas Lake and only when refuge lifeguards are on duty. Food, beverages, and pets are prohibited on the beach. Beach users must comply with the directions of authorized lifeguards. (13) Scuba diving is permitted in the refuge portion of Elmer Thomas Lake, but is prohibited in all other refuge waters. Diving areas must be marked with appropriate warning flags when outside marked swimming areas. Diving is permitted during daylight hours only. Inflatable vests must be worn during diving. (14) Pets must be kept on a leash, not to exceed 10 feet in length, one end of which must be secured to restrict the movement of the pet. Pets are prohibited at the swimming beach. (15) Motorized vehicles are permitted only on developed roads. Vehicle travel on roads closed by sign or barrier is prohibited. All vehicles must be operated safely and in accordance with posted speed limits and other regulatory signs. Stopping on roadways is prohibited. Parking or leaving unattended any vehicle is permitted only in areas designated for that purpose by sign or on refuge maps available to the public and only for the purpose of authorized activities. Vehicles found parked in any closed areas, or any area not designated as a parking area or in any area after the hours of authorized activities, may be removed from the refuge. Any changes or expenses incurred by such removal, including storage fees, shall be borne by the owner of the vehicle. (16) The public display or consumption of alcoholic beverages, including beer is prohibited. (17) Possession or use of any alcoholic beverage, including beer by persons under 18 years of age is prohibited. (18)

The transportation of any alcoholic beverage, including beer, that is accessible to the driver or any occupant of a moving vehicle is prohibited unless it is in the original container and the original cap or seal has not been removed or loosened.

Texas

Anahuac National Wildlife Refuge, P.O. Box 278, Anahuac, Texas 77514, telephone 713-267-3337. Public Entry and Use.

Special conditions: (1) Overnight camping is permitted only adjacent to the shoreline of East Bay. Camping is limited to 3 days and 3 nights. (2) Campfires are permitted only adjacent to the shoreline of East Bay. (3) Boats may be launched from the refuge into East Bay.

Aransas National Wildlife Refuge, P.O. Box 100, Austwell, Tex. 77950, telephone 512-286-3559. Public Entry and Use.

Special conditions: (1) Camping is permitted only for organized youth groups that have obtained a special permit. (2) Touring, sightseeing, hiking, nature observation, photography, and sound recording of wildlife are permitted along designated routes of travel except where restricted by appropriate signs. (3) Pets must be confined or kept on a leash, not to exceed 10 feet in length, one end of which is secured to restrict the movement of the pet. (4) The refuge is open for public use from sunrise to sunset. (5) Visitors must register upon arrival. (6) Special conditions for the Matagorda Island Unit of the Aransas National Wildlife Refuge are (a) sightseeing, hiking, nature observation, beachcombing, camping, photography and sound recording of wildlife are permitted in areas so designated; (b) visitors have access to surf fishing and swimming; (c) Pets must be confined or kept on a leash, not to exceed 10 feet in length, one end of which must be secured, so as to restrict the movements of the pet; and (d) visitors must register upon arrival.

Buffalo Lake National Wildlife Refuge, P.O. Box 228, Umbarger, Texas 79091, telephone 806-946-3341. Public Entry and Use.

Special conditions: (1) Touring, sightseeing, hiking, nature observation, photography and sound recording of wildlife are permitted along designated routes of travel except where restricted by appropriate signs. (2) Camping and picnicking is permitted in designated areas. (3) Pets must be confined or kept on a leash, not to exceed 10 feet in length, one end of which must be secured so as to restrict the movement of the pet.

Hagerman National Wildlife Refuge, Route 3, Box 123, Sherman, Texas 75090, telephone 214-786-2826. Public Entry and Use.

Special conditions: (1) Touring, sightseeing, nature study, photography and sound recording of wildlife are permitted along designated routes of travel except where restricted by appropriate signs. (2) Picnicking is permitted and fires may be built in access area fireplaces only and must be extinguished before leaving the area. (3) Pecan picking is permitted in areas not closed to access and is limited to one gallon per person per day. (4) Overnight camping is prohibited. (5) Pets must be confined or kept on a leash, not to exceed 10 feet in length, one end of which must be secured so as to restrict the movements of the pet.

Laguna Atascosa National Wildlife Refuge, P.O. Box 450, Rio Hondo, Texas 78583, telephone 512-748-2426. Public Entry and Use.

Special conditions: (1) Touring, sightseeing, hiking, nature observation, photography and sound recording of wildlife is permitted along designated routes of travel, except where restricted by appropriate signs. (2) Camping is permitted in the North Point and West Side Recreation Areas only. A 3-day maximum stay is allowed. (3) Pets must be confined or kept on a leash, not to exceed 10 feet in length, one end of which must be secured so as to restrict the movements of the pet. (4) Swimming within the refuge is prohibited.

Muleshoe National Wildlife Refuge, P.O. Box 549, Muleshoe, Texas 79347, telephone 806-946-3341. Public Entry and Use.

Special conditions: (1) Access for wildlife observation, nature study and photography is permitted by motor vehicle, foot, or horseback along designated routes of travel except where restricted by appropriate signs. (2) Groups of 10 or more people must register in advance to use the refuge. (3) Camping is permitted in designated sites only. (4) Pets must be confined or kept on a leash, not to exceed 10 feet in length, one end of which must be sucured so as to restrict the movements of the animal.

Santa Ana National Wildlife Refuge, Route 1, Box 202A, Alamo, Tex. 78516, telephone 512-787-3079. Public Entry and Use.

Special conditions: (1) The refuge is open to visitation daily from sunrise to sunset. (2) Vehicular access is restricted to the scenic drive during the hours of 8 a.m. to 6 p.m. (3) Motorcycles are prohibited on the refuge except that portion of the scenic drive from the north entrance to the headquarters parking lot. (4) Camping is permitted only by groups participating in environmental education or educational field trip activities on a reservation basis. Applications for reservations should be sent to the above address. (5) Pets must be confined or kept on a leash, not to exceed 10 feet in length, one end of which must be secured so as to restrict the movements of the pet.

The provisions of this special regulation supplement the regulations which govern public access, use and recreation on wildlife refuge areas generally which are set forth in Title 50, Code of Federal Regulations, Part 26. The public is invited to offer suggestions and comments at any time.

Note.—The U.S. Fish and Wildlife Service has determined that this document does not contain a major proposed requiring preparation of an Economic Impact Statement under Executive Order 11949 and OMB Circular A-107.

Joseph R. Higham,

Area Manager, Austin, Tex.

[FR Doc. 79-33325 Filed 12-28-79; 8:45 am]

BILLING CODE 4310-55-M

---

50 CFR Part 33

Sport Fishing; National Wildlife Refuges in Florida, Georgia, and South Carolina

AGENCY: Fish and Wildlife Service.

ACTION: Special regulations.

SUMMARY: The Director has determined that the opening to sport fishing of certain National Wildlife Refuges is compatible with the objectives for which the areas were established, will utilize a renewable natural resource, and will provide additional recreational opportunity to the public. These special regulations describe the condition under which sport fishing will be permitted on portions of certain National Wildlife Refuges in Florida, Georgia, and South Carolina.

DATES: Effective December 31, 1979. for duration of calendar year 1980.

FOR FURTHER INFORMATION CONTACT: The Area Manager or appropriate Refuge Manager at the address or telephone number listed below:

Donald J. Hankla, Area Office Manager, U.S. Fish and Wildlife Service, 900 San Marco Boulevard, Jacksonville, Fla. 32207. Telephone: 904-791-2267.

John P. Davis, Refuge Manager, Savannah (and Blackbeard Island) National Wildlife Refuge, P.O. Box 8487, Savannah, Georgia 31412. Telephone: 912-232-4321, Ext 415.

Del Pierce, Refuge Manager, J. N. "Ding" Darling National Wildlife Refuge, P.O.

Drawer B. Sanibel, Florida 33957. Telephone: 813-472-1100.
Bruce Blihovde, Refuge Manager, Lake Woodruff National Wildlife Refuge, P.O. Box 488, DeLeon Springs, Florida 32028. Telephone: 904-985-4673.
Thomas W. Martin, Refuge Manager, Loxahatchee National Wildlife Refuge, Boynton Beach, Florida 33437. Telephone: 305-732-3684.
Stephen Vehrs, Refuge Manager, Merritt Island National Wildlife Refuge, P.O. Box 6504, Titusville, Florida 32780. Telephone: 305-867-4820.
John R. Eadie, Refuge Manager, Okefenokee National Wildlife Refuge, P.O. Box 117, Waycross, Georgia 31501. Telephone: 912-283-2580.
Ronnie L. Shell, Refuge Manager, Piedmont National Wildlife Refuge, Round Oak, Georgia 31080. Telephone: 912-986-5441.
Joe D. White, Refuge Manager, St. Marks National Wildlife Refuge, P.O. Box 68, St. Marks, Florida 32355. Telephone: 904-925-6121.
Martin Perry, Refuge Manager, St. Vincent National Wildlife Refuge, P.O. Box 447, Apalachicola, Florida 32320. Telephone: 904-653-8808.

SUPPLEMENTARY INFORMATION:

§ 33.5 Special regulations; sport fishing for individual wildlife refuge areas.

General

Sport fishing on portions of the following refuges shall be in accordance with applicable State and Federal regulations, subject to additional special regulations and conditions as indicated. Portions of refuges which are open to sport fishing are designated by signs and/or delineated on maps. Special conditions applying to individual refuges and maps are available at refuge headquarters or from the office of the Area Manager (addresses listed above).

The Refuge Recreation Act of 1962 (16 U.S.C. 460K) authorized the Secretary of the Interior to administer such areas for public recreation as an appropriate incidental or secondary use only to the extent that it is practicable and not inconsistent with the primary objectives for which the area was established. In addition, the Refuge Recreation Act requires that before any area of the refuge system is used for forms of recreation not directly related to the primary purposes and functions of the area, the Secretary must find that: (1) Such recreational use will not interfere with the primary purposes for which the area was established; and (2) funds are available for the development, operation, and maintenance of the permitted forms of recreation.

The recreational use authorized by these regulations will not interfere with the primary purposes for which these refuges were established. Funds are available for the administration of the recreational activities permitted by these regulations.

Sport fishing is permitted on the following refuges within those areas posted with signs and/or designated on a map. Sport fishing shall be in accordance with all applicable State regulations subject to the aforementioned general conditions and the following special conditions:

Florida

J. N. "Ding" Darling National Wildlife Refuge

Sport and commercial fishing is permitted in 1,050 acres of tidal waters of the J. N. "Ding" Darling National Wildlife Refuge, Sanibel, Florida. Sport fishing only is permitted in 800 acres of freshwater impoundments on the Darling Tract and from the fishing pier located on Lighthouse Point. A valid Florida state fishing license is required for catching freshwater species from the Darling Tract impoundments. Boats are prohibited in the Darling Tract impoundments. The taking of live shellfish other than clams and oysters is prohibited in refuge waters. The following special regulations apply to the public fishing pier: Cast nets are limited to bait nets with a stretched mesh of ¾ inch or less; boats will not be allowed to tie up at the pier except during emergency situations; and fishermen will be limited to no more than two fishing poles, rods or lines.

Lake Woodruff National Wildlife Refuge

Sport fishing on the Lake Woodruff National Wildlife Refuge, DeLeon Springs, Florida is permitted on approximately 650 acres. The sport fishing season is open year-round on delineated refuge waters west of Norris Dead River, Lake Woodruff, Spring Garden Creek, Highland Park Canal, and the Canal bordering the east side of Norris Dead River. Refuge waters east of Norris Dead River Canal, Lake Woodruff and Spring Garden Creek will be open to fishing and access March 15 to October 15, 1980. Fishing and access on refuge waters are permitted during daylight hours only. Air thrust boats are prohibited.

Loxahatchee National Wildlife Refuge

Sport fishing is permitted in all waters (61,352 acres) of the Loxahatchee National Wildlife Refuge, Boynton Beach, Florida except the headquarters management area and those areas marked by signs as being closed. All public entry onto the refuge for any purpose is limited to the following points: (a) S-5A (Twenty-Mile Bend) boat ramp; (b) Headquarters area; (c) Loxahatchee Recreation Area. Sport fishing is permitted year-round. Fishing is restricted to 1½ hours before sunrise until 1 hour after sunset. Boats must enter or leave the refuge through the three public ramps: (a) S-5A (Twenty-Mile Bend) boat ramp; (b) Headquarters boat ramp; (c) S-39 (Loxahatchee Recreation Area) boat ramps. Method of fishing allowed is with attended rod and reel and/or pole and line. Air thrust boat use is authorized only by special permit issued by the refuge manager. Speed boats and racing craft are prohibited.

Merritt Island National Wildlife Refuge

Sport fishing is permitted in the open waters of the Indian River, Banana River, Banana Creek, Mosquito Lagoon, Mosquito control impoundments and interior lakes except for the Kennedy Space Center security areas. No more than 20 total fish daily per person may be taken from the K.A.R.S. marina in the Banana River or Eddy Creek "trout hole" in Mosquito Lagoon during the period November 15—March 13 annually, by any individual sport fisherman. Sport fishing is permitted during daylight hours only. Night sport fishing from boats in the open waters on the Indian River, Banana River, and Mosquito Lagoon is permitted by fishermen with a refuge special use permit. The permit is free and can be obtained from the refuge headquarters. Fishing in close proximity to manatees is prohibited. Fishing lines must be attended at all times and discarding of tangled line into the waters of the refuge is prohibited.

St. Marks National Wildlife Refuge

Sport fishing is permitted in all waters of the St. Marks National Wildlife Refuge (approximately 65,000 acres), St. Marks, Florida except those marked by signs as being closed. The sport fishing season on the refuge extends from March 15 through October 15, 1980, with the exception of Otter Lake which is open year-round. Travel is restricted to established, designated roads only. Fishing is permitted ½ hour before sunrise until ½ hour after sunset during the open season. Boats with electric motors and gasoline engines up to and including 4 horsepower are permitted. Trotlines shall be taken up daily prior to closing hours of fishing. The taking of saltwater species in Apalachee Bay and tidal creeks is subject to State regulations. Year-round launching of saltwater fishing boats from the Lighthouse launch ramp is regulated. The launching of commercial boats and sport net boats is prohibited.

St. Vincent National Wildlife Refuge

Sport fishing on the St. Vincent National Wildlife Refuge, Franklin County, Apalachicola, Florida is permitted on 245 acres from March 1 through October 31, 1980. Fishermen are permitted on the refuge from ½ hour before sunrise to ½ hour after sunset. Boats with electric motors permitted; all other motors prohibited. Private boats may not be left on the refuge overnight. Use of live minnows as bait is prohibited.

Georgia

Blackbeard Island National Wildlife Refuge

Fresh water sport fishing on the Blackbeard Island National Wildlife Refuge, McIntosh County, Townsend, Georgia is permitted on only two areas totaling 350 acres. The sport fishing season extends from March 15 through October 25, 1980. No one will be allowed on the refuge before sunrise and all persons must be off the refuge no later than ½ hour after sunset. Boats with electric motors permitted. Gasoline powered motors prohibited. Use of live minnows as bait prohibited. Private boats may not be left on the refuge overnight.

Okefenokee National Wildlife Refuge

Sport fishing is permitted on the Okefenokee National Wildlife Refuge, Waycross, Georgia in the designated open water areas connected by established boat runs. Fishing permitted during posted hours only. Boats with motors not larger than 10 horsepower, canoes, and row boats permitted. Use of live minnows as bait prohibited. Trotlines, limblines, nets and other set tackle prohibited. Persons entering refuge from main access points must register with the respective concessioner. Persons using the Sill access ramp on the Pocket and Kingfisher Landing access ramp are required to sign the respective registers when they enter the swamp and again when they leave.

Piedmont National Wildlife Refuge

Sport fishing on the Piedmont National Wildlife Refuge, Round Oak, Georgia is permitted on approximately 87 acres during daylight hours. Fishing is allowed on the following areas in accordance with all applicable State regulations subject to the following restrictions. Open season: Falling Creek Bridge and Little Falling Creek Bridge open daily May 13 through September 13, 1980. Pond 2A open May 13 through September 13, 1980 on Tuesdays, Saturdays and national holidays; Boats allowed; electric motors permitted; all other motors prohibited. Ponds 6A, 7A, 9A, 11A, and 11B open May 13 through September 13, 1980, on Tuesdays, Saturdays and national holidays; no boats allowed. 5 Points Lake open May 13 through September 13, 1980; fishing is permitted daily; no boats allowed. Ponds 21A and 22A-open May 13 through September 13, 1980, on Tuesdays, Saturdays and national holidays; no boats allowed. Fishing on these two areas is restricted to youths 12 years of age or younger. Boats may not be left on the refuge overnight. No minnows allowed for bait. Littering, firearms, camping and alcoholic beverages are prohibited. Fishing shall be with rod and reel and/or pole and line only. Bank fishing permitted within posted areas only. Bass creel limit is 5 fish, 12 inches or longer.

Georgia and South Carolina

Savannah National Wildlife Refuge

Sport fishing on the Savannah National Wildlife Refuge, portion of Jasper County, South Carolina, and Chatham and Effingham Counties, Georgia is permitted only on designated impounded waters, tidal creeks, ditches and canals in an area comprising 26,000 acres. The sport fishing season extends from March 15 through October 25, 1980, for all impounded waters. No one will be allowed on the refuge before sunrise and all persons must be off the refuge no later than ½ hour after sunset. Only electric motors are permitted on impounded waters. Tidal creeks may be fished from boats only from February 1 through October 25. Rod and reel, pole and line, artificial and live baits are permitted. All areas posted with "closed area" signs are closed to all activities including fishing. Private boats may not be left on the refuge overnight.

Dated: December 20, 1979.

Sam O. Drake, Jr,

Acting Area Manager.

[FR Doc. 79-39808 Filed 12-28-79; 8:45 am]

BILLING CODE 4310-55-M

---

50 CFR Part 33

Sport Fishing; Opening of Certain National Wildlife Refuges to Sport Fishing in North Dakota

AGENCY: Fish and Wildlife Service, Interior.

ACTION: Special regulation.

SUMMARY: The Director has determined that the opening to sport fishing of certain National Wildlife Refuges is compatible with the objectives for which the area was established, will utilize a renewable natural resource, and will provide additional recreational opportunity to the public.

DATES: December 15, 1979 through March 23, 1980.

FOR FURTHER INFORMATION CONTACT: The Area Manager or appropriate Refuge Manager at the address or telephone number listed below.

Gilbert Key, Area Office Manager, U.S. Fish and Wildlife Service, 1500 Capitol Ave., Bismarck, ND 58501. Telephone: (701) 255-4011 X-401.

Ronald D. Shupe, Refuge Manager, Audubon National Wildlife Refuge, R.R. 1, Coleharbor, ND 58531. Telephone: (701) 442-5474.

John Venegoni, Refuge Manager, Des Lacs National Wildlife Refuge and Lake Ilo National Wildlife Refuge, Box 578, Kenmare, ND 58746. Telephone: (701) 385-4046.

SUPPLEMENTARY INFORMATION:

General

Sport fishing on portions of the following refuges shall be in accordance with applicable State and Federal regulations subject to additional special regulations and conditions as indicated. Portions of refuges which are open to sport fishing are designated by signs and/or delineated on maps. Special conditions applying to individual refuges and maps are available at refuge headquarters or from the Office of the Area Manager (addresses listed above).

The Refuge Recreation Act of 1962 (16 U.S.C. 460k) authorizes the Secretary of the Interior to administer such areas for public recreation as an appropriate incidental or secondary use only to the extent that it is practicable and not inconsistent with the primary objectives for which the area was established. In addition, the Refuge Recreation Act requires that before any area of the refuge system is used for forms of recreation not directly related to the primary purposes and functions of the area, the Secretary must find that (1) such recreational use will not interfere with the primary purposes for which the area was established; and (2) funds are available for the development, operation and maintenance of the permitted forms of recreation.

The recreational use authorized by these regulations will not interfere with the primary purposes for which these refuges were established. Funds are available for the administration of the recreational activities permitted by these regulations.

§ 33.5 Special regulations; sport fishing; for individual wildlife refuge areas.

North Dakota

Audubon National Wildlife Refuge

Sport fishing on the Audubon National Wildlife Refuge, Coleharbor, North Dakota, is permitted on approximately 10,500 acres. Snowmobiles are not permitted on the refuge.

Lake Ilo National Wildlife Refuge

Sport fishing on Lake Ilo National Wildlife Refuge, Dunn Center, North Dakota, is permitted on approximately 1,050 acres. Fishing is permitted during daylight hours only.

Des Lacs National Wildlife Refuge

Sport fishing on the Des Lacs National Wildlife Refuge, Kenmare, North Dakota, is permitted on 700 acres of middle Des Lacs Lake. Fishing or parking is not permitted on County Road 2 or on the bridge over Des Lacs Lake.

Dated: December 18, 1979.

Gilbert E. Key,

Area Manager, Bismarck, North Dakota.

[FR Doc. 79-39831 Filed 12-28-79; 8:45 am]

BILLING CODE 4310-55-M

DEPARTMENT OF COMMERCE

National Oceanic and Atmospheric Administration

50 CFR Part 655

Squid Fishery of the Northwest Atlantic

AGENCY: National Oceanic and Atmospheric Administration (NOAA)/ Commerce.

ACTION: Promulgation of final regulations.

SUMMARY: These final regulations implement the fishery management plan (FMP) prepared by the Mid-Atlantic Fishery Management Council (Council) for the Squid Fishery of the Northwest Atlantic Ocean under authority of the Fishery Conservation and Management Act of 1976, 16 U.S.C. 1801 *et seq.*, as amended (the Act). These final regulations control domestic and foreign vessels within the United States fishery conservation zone (FCZ), fishing for Atlantic squid (*Illex illecebrosus* or *Loligo pealei*). The final regulations provide:

(1) Annual catch quotas for both domestic and foreign fishermen;

(2) A fishing year for both species of squid from April 1, 1979, through March 31, 1980;

(3) A fishing permit and recordkeeping system; and

(4) Criteria for reallocating portions of the domestic annual harvest (DAH) to the total allowable level of foreign fishing (TALFF).

All regulations governing foreign fishing for Atlantic squid contained in 50 CFR Part 611 are incorporated in these regulations. Those regulations are repromulgated to implement portions of the FMP.

Proposed regulations were published on June 26, 1979; public comment was invited for a 60-day period. Comments received are addressed in the supplementary information section of the preamble.

EFFECTIVE DATE: These final regulations are effective January 1, 1980, with the exception of §§ 655.4, 655.5, and 655.6, which are effective on February 15, 1980. The delay in implementing §§ 655.4–655.6 will allow domestic fishermen harvesting Atlantic squid to become familiar with the requirements for establishing fishing permits, recordkeeping, and vessel identification.

ADDRESS: Copies of the approved FMP and the final regulatory analysis (RA) may be obtained by writing to the person listed below.

FOR FURTHER INFORMATION CONTACT: Mr. Allen E. Peterson, Jr, Regional Director, Northeast Region, National Marine Fisheries Service, 14 Elm Street, Gloucester, Massachusetts 01930, Telephone: (617) 281-3600.

SUPPLEMENTARY INFORMATION: The Assistant Administrator for Fisheries, NOAA, approved the FMP for the Squid Fishery of the Northwest Atlantic Ocean on June 6, 1979. The FMP was published on June 26, 1979, along with the proposed implementing regulations (44 FR 37252).

Public comments on the proposed regulations, NOAA's response to those comments, and several amendments made in these regulations are discussed on a section-by-section basis below. Other technical and editorial changes of a minor nature were made in the final regulations.

Section 655.2 Definitions. The definitions of "commercial fishing" and "personal use of squid" have been deleted from the proposed regulations. The intent of the FMP to exempt from permit requirements "recreational fishermen taking squid for their personal use" has been implemented by amending the permit § 655.4(a) (see below).

"Person who receives squid for a commercial purpose" has been defined to clarify who is required to maintain fish dealer/processor reports under § 655.5(b).

Section 655.3 Relation to other laws. Paragraph (b) of the proposed section has been deleted, because it duplicated paragraph (b) of § 655.1.

Section 655.4 Vessel permits and fees. Paragraph 4(a) has been changed by exempting from the permit requirement vessels which catch no more than 100 pounds of squid per trip. Difficulties in defining the "personal use of squid" led the agency to substitute a simpler exemption for vessels which catch small amounts of squid.

The circumstances under which a permit expires have been expanded to include changes in length, gross tonnage, fish hold capacity of the vessel, home port, or regulated fisheries in which the vessel is engaged; these are in addition to changes in ownership or name of the vessel. The change is made to reflect the conditions and information stated on the permit.

Section 655.5 Recordkeeping and reporting. This section discusses recordkeeping required of fishing vessel operators and fish dealers/processors. An attempt is being made to standardize the recordkeeping provisions for all regulated Northwest Atlantic Ocean fisheries, because a single comprehensive recordkeeping form will be used for U.S. participants in these regulated fisheries. Many of the changes in this section are a result of this standardization process.

In regard to fishing vessels, the term "fishing logbook report" was used in the proposed regulations. This has been replaced with "fishing vessel record," in order to establish internal consistency between the paragraph's heading and text.

Language has been added to require negative reporting (i.e., that no regulated species were taken over the reporting period). Without such a provision, it is impossible to determine whether all permitted vessels are complying with the recordkeeping requirements. Exemptions to negative reporting may be granted for periods of two to ten months for vessels permitted under this Part which are not catching squid for that period of time. This exemption is intended to accommodate those vessels catching squid on a seasonal basis only, or vessels under repairs.

One commenter objected to the substance of the requirements for recordkeeping and reporting for fish dealers/processors. The objection was that these regulations contain the same requirements for price information that were objected to previously in the regulations governing the Atlantic Groundfish Fishery (50 CFR Part 651)

and the Atlantic Herring Fishery (50 CFR Part 653). There is presently an industry/government/Council task force working to develop an acceptable recordkeeping and reporting form for fish dealers/processors. NOAA will use this form for the dealer/processor reporting system as soon as it is developed. The commenter also expressed concern about the lack of provisions for confidentiality of reported data, as required under section 303(d) of the Act. Regulations to implement the confidentiality requirements of the Act were published as interim final regulations on December 7, 1979 (44 FR 70480).

The commenter expressed the opinion that no recordkeeping or reporting requirements should be proposed for any fishery prior to circulation for public comment of the task force's review of this matter. NOAA believes that basic reporting requirements must be included in regulations implementing an FMP to comply with the requirements of section 303(a)(5) of the Act.

Section 655.21 Allowable levels of harvest. Several commenters discussed the specified OY for *Illex* to the effect that modification of the maximum sustainable yield (MSY) of 40,000 mt to the optimum yield (OY) of 30,000 mt cannot be justified on the basis of the information in the FMP and in the preamble to the proposed regulations. Public comments stated that the specified MSY is biologically conservative; therefore, a reduction from MSY to the specified OY for biological reasons is inappropriate. In addition, they suggested that consideration of the role of *Illex* as an important prey for other fish and marine mammals is not valid in specifying OY.

The MSY for *Illex* of 40,000 mt from the territorial sea and FCZ of the United States, while conservative, is reasonable given the variability in estimates of population size over time and the lack of detailed understanding of the relationship between a given population size and subsequent recruitment of juvenile *Illex* into the fishable population. Estimates of *Illex* biomass on Georges Bank and the southern Scotian Shelf have ranged from 58,000 mt to 258,000 mt in recent years. Assuming that: (1) a moderate stock-recruitment relationship exists, and (2) most fishing mortality occurs during the summer, these biomass estimates indicate that catches of 21,000 mt to 95,000 mt could have been supported by the population. These data, however, are not considered highly reliable. At present, there is no basis for predicting the future abundance of *Illex*. Therefore, the MSY is "conservative biologically" and "based on minimum estimates of biomass size" (44 FR 37272).

The Act states that optimum yield is the amount of fish "which is prescribed as such on the basis of the maximum sustainable yield from such fishery, as modified by any relevant economic, social, or ecological factor" (section 3(18)(b)). The predator-prey relationship in the north Atlantic ecosystem is a "relevant" ecological factor and is discussed in the FMP (44 FR 37270). Accounting for these relationships in the design of a fisheries management system may result in a certain amount of resource being "lost" for purposes of human consumption. Yet, this will help to provide stability to natural ecosystem cycles which, in the long term, will serve to benefit a number of other fisheries.

Several commenters objected to the estimates of domestic annual harvest (DAH) of 14,000 mt of *Loligo* and 10,000 mt of *Illex*. In particular, one stated that the "allocations to domestic fishermen for the current fishing year so far exceed recent domestic catches in the fishery . . . that a significant waste of resources can be expected." Similarly, another commenter stated that "the estimated domestic annual harvests (DAH) of 10,000 mt of *Illex* and 14,000 mt of *Loligo* lack sufficient justification both in terms of the historical catch of the U.S. commercial and recreational fisheries and evidence of the capacity and intent of domestic fishermen to harvest those amounts." The Council's estimate of DAH reflects three factors: (1) past performance of the domestic fishery; (2) anticipated changes in traditional fishing patterns and practices; and (3) unquantified catches. In 1978, U.S. landings of squid from the Northwest Atlantic were approximately 1,900 mt. For the first ten months of 1979, domestic landings were reported to be 5,100 mt, and NOAA projects the entire 1979 domestic harvest to be 6,500 mt. This represents a 200 percent increase in the harvest. This upward trend is expected to continue as the industry's ability to provide high quality squid for export markets continues to improve. A new fishing vessel with flash freezer capacity aboard began operations this past summer and is expected to be involved in the squid fishery. NOAA has indications that two additional fishing vessels of similar design are under construction and will enter the fisheries in the summer of 1980.

The DAH specification is based on reasonable assumptions about the anticipated growth of the domestic fishery. If domestic fishermen fail to reach the anticipated levels of harvest, a reallocation system provides for redistribution of the allowable catch to foreign fishermen. Furthermore, recordkeeping and reporting required under section 655.5 will enable the Council to project more accurately future domestic participation in the squid fishery.

Section 655.22 Reallocation. Several comments were received on both the criteria for in-season reallocation of Atlantic squid from DAH to TALFF, and the timing of such reallocations. The intent of the FMP is to provide for in-season reallocations in the event that the projected estimate of DAH is markedly different from actual harvests during the year. The dates for any potential reallocations are late in the fishing year due to domestic fishing practices.

Section 655.23 Closure of fishery. In the proposed regulations, the Regional Director could make a recommendation for closure of the fishery when 90 percent of the annual quota for the particular species was reported harvested. Upon review, NOAA believes that this does not provide the responsiveness necessary for timely action to prevent the quota from being exceeded. To provide for timely action, the percentage has been changed from 90 percent to 80 percent.

FMP Approval

The Assistant Administrator has reviewed comments received on the FMP, and finds that the plan is consistent with the national standards, other provisions of the Act, and other applicable law. Comments on the FMP have been forwarded to the Council for its consideration in future amendments.

National Environmental Policy Act of 1969 (NEPA)

Development and implementation of the FMP have been deemed a major federal action significantly affecting the quality of the human environment. An environmental impact statement (EIS) has been prepared and a notice of availability was published on June 9, 1978 (43 FR 25183). This EIS was supplemented and a notice of its availability was published on January 22, 1979 (44 FR 4545).

Executive Order 12044

A regulatory analysis, required by Executive Order 12044, has been prepared. Persons wishing to inspect this document may do so by contacting the Regional Director (see "addresses" above).

Administrative Procedure Cooling Period

The Assistant Administrator for Fisheries has determined that the 30-day "cooling" period required under the Administrative Procedure Act (APA) should be waived because the regulations implementing the preliminary fishery management plan will expire on January 1, 1980. Delay in implementing these final regulations would prevent foreign nations from prosecuting their fisheries for *Loligo* or *Illex*.

Signed at Washington, D.C. this 26th day of December, 1979.

(16 U.S.C. 1801 *et seq.*)

Winfred H. Meibohm,

Executive Director, National Marine Fisheries Service.

Regulations governing foreign fishing for Atlantic squid in 50 CFR Part 611 are hereby repromulgated. Part 655 is adopted as final to read as set forth below:

PART 655—SQUID FISHERY OF THE NORTHWEST ATLANTIC

Subpart A—General Provisions

Sec.
655.1 Purpose and Scope.
655.2 Definitions.
655.3 Relation to Other Law.
655.4 Vessel Permits and Fees.
655.5 Recordkeeping and Reporting Requirements.
655.6 Vessel Identification.
655.7 Prohibitions.
655.8 Enforcement.
655.9 Penalties.

Subpart B—Management Measures

655.20 Fishing Year.
655.21 Allowable Levels of Harvest.
655.22 Reallocation Provisions.
655.23 Closure of Fishery.
655.24 Size Restrictins. [Reserved]
655.25 Gear/Vessel Equipment Restrictions. [Reserved]
655.26 Area/Time Restrictions [Reserved].

Authority: 16 U.S.C. 1801 *et seq.*

Subpart A—General Provisions

§ 655.1 Purpose and scope.

(a) These regulations in this Part: (1) implement the Fishery Management Plan for the Squid Fishery of the Northwest Atlantic Ocean, which was prepared and adopted by the Mid-Atlantic Fishery Management Council and approved by the Assistant Administrator; and (2) govern fishing for Atlantic squid by fishing vessels of the United States within that portion of the Atlantic Ocean over which the United States exercises exclusive fishery management authority.

(b) The regulations governing fishing for Atlantic squid by foreign vessels in the fishery conservation zone are contained in 50 CFR Part 611.

§ 655.2 Definitions.

In addition to the definitions in the Act, the terms used in this Part shall have the following meanings:

Act means the Fishery Conservation and Management Act of 1976, as amended, 16 U.S.C. 1801 *et seq.*

Assistant Administrator means the Assistant Administrator for Fisheries of the National Oceanic and Atmospheric Administration, Department of Commerce, or an individual to whom approproate authority has been delegated.

Atlantic squid means the species *Illex illecebrosus* (short-finned or summer squid) and *Loligo pealei* (long-finned or bone squid).

Authorized Officer means:

(a) Any commissioned, warrant, or petty officer of the U.S. Coast Guard;

(b) Any certified enforcement officer or special agent of the National Marine Fisheries Service;

(c) Any officer designated by the head of any Federal or State agency which has entered into an agreement with Secretary of Commerce and the Commandant of the U.S. Coast Guard to enforce the provisions of the Act; or

(d) Any U.S. Coast Guard personnel accompanying and acting under the direction of any person described in paragraph (a) of this definition.

Catch, take, or *harvest* includes, but is not limited to, any activity which results in mortality to any squid or in bringing any squid on board a vessel.

Fishery Conservation Zone (FCZ) means that area adjacent to the United States which, except where modified to accommodate international boundaries, encompasses all waters from the seaward boundary of each of the coastal States to a line on which each point is 200 nautical miles from the baseline from which the territorial sea of the United States is measured.

Fishing includes any activity, other than scientific research activity conducted by a scientific research vessel, which involves:

(a) The catching, taking, or harvesting of squid;

(b) The attempted catching, taking, or harvesting of squid;

(c) Any other activity which can reasonably be expected to result in the catching, taking, or harvesting of squid; or

(d) Any operations at sea in support of, or in preparation for, any activity described in paragraphs (a), (b), or (c) of this definition.

Fishing trip means a period of time during which fishing is conducted, beginning when the vessel leaves port and ending when the vessel returns to port.

Fishing vessel means any vessel, boat, ship, or other craft which is used for, equipped to be used for, or of a type which is normally used for: (a) fishing; (b) aiding or assisting one or more vessels at sea in the performance of any activity relating to fishing, including, but not limited to, preparation, supply, storage, refrigeration, transportation, or processing.

Operator, with respect to any fishing vessel, means the master or other individual on board and in charge of that vessel.

Owner, with respect to any fishing vessel, means:

(a) Any person who owns that vessel in whole or in part;

(b) Any charterer of the vessel, whether bareboat, time, or voyage;

(c) Any person who acts in the capacity of a charterer, including but not limited to parties to a management agreement, operating agreement, or any similar agreement that bestows control over the destination, function, or operation of the vessel; or

(d) Any agent designated as such by a person described in paragraphs (a), (b), or (c) of this definition.

Person means any individual (whether or not a citizen or national of the United States), corporation, partnership, assocation, or other entity (whether or not organized or existing under the laws of any State), and any federal, state, local, or foreign government or any entity of any such government.

Person who receives Atlantic squid for a commercial purpose means any person (excluding governments and governmetal entities) engaged in commerce who is the first purchaser of squid. The term includes, but is not limited to, dealers, brokers, processors, cooperatives, or fish exchanges. It does not include a person who only transports squid between a fishing vessel and a first purchaser.

Regional Director means the Regional Director, Northeast Region, National Marine Fisheries Service, Federal Building, 14 Elm Street, Gloucester, Massachusetts 01930. Telephone (617) 281-3600; or a designee

Regulated species means any species for which fishing by a vessel of the United States is regulated pursuant to the Act.

United States harvested squid means squid caught, taken, or harvested by vessels of the United States under this part, whether or not such squid is landed in the United States.

o

Vessel of the United States means:

(a) Any vessel documented or numbered by the United States Coast Guard under United States law; or

(b) Any vessel registered under the laws of any State.

§ 655.3 Relation to other laws.

(a) Nothing in this Part 655 shall be construed as relieving any person from compliance with other requirements imposed by any regulation or statute of the United States of any State.

(b) All fishing activity, regardless of species sought, is prohibited pursuant to 15 CFR Part 924, on the *U.S.S. Monitor* Marine Sanctuary, which is located approximately 15 miles southwest of Cape Hatteras off the coast of North Carolina (35°00'23"N. 75°24'32"W.).

§ 655.4 Vessel permits and fees.

(a) *General.* Every fishing vessel, including party and charter boats, fishing for Atlantic squid under this Part must have a fishing permit issued under this section. Vessels are exempt from this requirement if they catch no more than 100 pounds of squid per trip.

(b) *Eligibility.* [Reserved]

(c) *Application.* (1) An application for a permit under this Part must be submitted and signed by the owner or operator of the vessel on an appropriate form obtained from the Regional Director. The application must be submitted to the Regional Director at least 30 days prior to the date on which the applicant desires to have the permit made effective.

(2) Applicants shall provide all the following information:

(i) The name, mailing address including ZIP code, and telephone number of the owner of the vessel;

(ii) The name of the vessel;

(iii) The vessel's United States Coast Guard documentation number or the vessel's State registration number for vessels not required to be documented under provisions of Title 46 of the United States Code;

(iv) The home port or principal port of landing, gross tonnage, radio call sign, and length of the vessel;

(v) The engine horsepower of the vessel and year the vessel was built;

(vi) The approximate fish hold capacity of the vessel;

(vii) The type and quantity of fishing gear used by the vessel;

(viii) The average size of the crew, which may be stated in terms of a normal range; and

(ix) Any other information concerning vessel and gear characteristics requested by the Regional Director.

(3) Any change in the information specified in paragraph (c)(2) of this section shall be submitted by the applicant in writing to the Regional Director within 15 days of the change.

(d) *Fees.* No fee is required for any permit issued under this Part.

(e) *Issuance.* The Regional Director shall issue a permit to the applicant not later than 30 days from the receipt of a completed application.

(f) *Expiration.* A permit shall expire upon any change in vessel ownership, registration, name, length, gross tonnage, fish hold capacity, home port, or the regulated fisheries in which the vessel is engaged.

(g) *Duration.* A permit shall continue in full force and effect until it expires or is revoked, suspended, or modified pursuant to 50 CFR Part 621.

(h) *Alteration.* No person shall alter, erase, or mutilate any permit. Any permit which has been intentionally altered, erased, or mutilated is invalid.

(i) *Replacement.* Replacement permits may be issued by the Regional Director when requested in writing by the owner or operator. An application for a replacement permit shall not be considered a new application.

(j) *Transfer.* A permit issued under this Part is not transferable or assignable. A permit shall be valid only for the fishing vessel and owner for which it is issued.

(k) *Display.* A permit issued under this Part must be carried on board the fishing vessel at all times. The operator of a fishing vessel shall present the permit for inspection upon the request of any Authorized Officer.

(l) *Sanctions.* Subpart D of 50 CFR Part 621 (Civil Procedures) governs the imposition of sanctions against a permit issued under this Part. As specified in that Subpart D, a permit may be revoked, modified, or suspended if the permitted fishing vessel is used in the commission of an offense prohibited by the Act or these regulations, or if a civil penalty or criminal fine imposed under the Act is not paid.

§ 655.5 Recordkeeping and reporting.

(a) *Fishing vessel records.* (1) The operator of any fishing vessel issued a permit to fish for squid under this Part shall:

(i) Maintain on board the vessel an accurate and complete fishing vessel record on forms supplied by the Regional Director, according to the requirements of § 655.5(a)(2);

(ii) Make the fishing vessel record available for inspection or reproduction by an Authorized Officer, or an employee of the National Marine Fisheries Service designated by the Regional Director to make such inspections, at any time during or after a fishing trip;

(iii) Keep each fishing vessel record for one year after the date of the last entry in the fishing vessel record; and

(iv) Submit fishing vessel records, as specified in § 655.5(a)(2).

(2) The owner or operator of any fishing vessel conducting any fishing operation subject to this Part shall:

(i) Submit a complete fishing vessel record to a location designated by the Regional Director within 48 hours after the end of any fishing week or fishing trip (whichever time period is longer) during which regulated species were taken; or

(ii) Submit a statement to a location designated by the Regional Director, 48 hours after the end of any calendar week within which no fishing for any regulated species occurred.

(3) Fishing vessel records shall contain information on a daily basis for the entirety of any trip during which squid or any other regulated species are caught, and shall contain information for all fish which are caught. Information on squid catches shall be provided separately for *Illex* and *Loligo*. To assist fishermen in complying with the requirement that catches be reported separately for *Illex* and *Loligo*, a diagram showing the major external differences between *Illex* and *Loligo* is reproduced as an Appendix to these regulations.

(4) A request for exemption from the provisions of 655.5(a)(2)(ii) shall be submitted, in writing, to the Regional Director. Such requests shall state the reason for the request and the period of time for which the exemption is to apply. The Regional Director may issue an exemption for a period of time greater than two months and less than ten months. If an exemption is issued, the Regional Director must be notified in writing of the operator's intent to resume fishing before fishing may be resumed.

(5) The Assistant Administrator may revoke, modify, or suspend the permit of a fishing vessel whose owner or operator falsifies or fails to submit the records and reports prescribed by this section, in accordance with the provisions of 50 CFR Part 621.

(b) *Fish dealer or processor reports.* Any person who receives Atlantic squid for a commercial purpose from a fishing vessel subject to this Part shall:

(1) File a weekly report (Sunday through Saturday) to a location designated by the Regional Director on forms supplied by the Regional Director within 48 hours of the end of any week in which squid is received. This report shall include information on all first

transfers, purchases, or receipts of squid (listing *Illex* and *Loligo* separately) and all other fish made during that week; and

(2) Permit an Authorized Officer, or an employee of the National Marine Fisheries Service designated by the Regional Director to make inspections, to inspect or reproduce any records or books relating to any first transfers, purchases, or receipts of squid. These inspections may take place at the principal place of business or at the location where these required records regularly are kept.

§ 655.6 Vessel identification.

(a) *Official Number.* Each fishing vessel subject to this Part and over 25 feet in length shall display its Official Number on the port and starboard sides of the deckhouse or hull and on an appropriate weather deck so as to be clearly visible from enforcement vessels and aircraft. The Official Number is the documentation number issued by the Coast Guard for documented vessels or the registration number issued by a State or the Coast Guard for undocumented vessels.

(b) *Numerals.* (1) The Official Number shall be at least 18 inches in height for fishing vessels over 65 feet in length and at least 10 inches in height for all other vessels over 25 feet in length.

(2) The Official Number must be in block Arabic numerals in contrasting color to the background.

(3) The Official Number shall be permanently affixed to or painted on the vessel. However, vessels carrying fishing parties on a per capita basis or by charter may use non-permanent markings to display the Official Number whenever the vessel is fishing for squid.

(c) *Vessel length.* The length of a vessel, for purposes of this section, is that length set forth in U.S. Coast Guard or State records.

(d) *Duties of operator.* The operator of each fishing vessel shall:

(1) Keep the Official Number clearly legible and in good repair; and

(2) Ensure that no part of the fishing vessel, its rigging, or its fishing gear obstructs the view of the Official Number from any enforcement vessel or aircraft.

§ 655.7 Prohibitions.

It is unlawful for any person to:

(a) Use any vessel for the taking, catching, harvesting, or landing of any Atlantic squid (except as provided for in section 655.4(a)), unless the vessel has a valid permit issued pursuant to this Part on board the vessel;

(b) Fail to report to the Regional Director within 15 days any change in the information contained in the permit application for a vessel;

(c) Falsify or fail to make, keep, maintain, or submit any fishing vessel record or fish dealer/processor report, or other record or report required by this Part;

(d) Make any false statement, oral or written, to an Authorized Officer, concerning the taking, catching, landing, purchase, sale, or transfer of any Atlantic squid;

(e) Fail to affix and maintain vessel markings as required by § 655.6;

(f) Possess, have custody or control or, ship, transport, offer for sale, sell, purchase, import, export, or land any Atlantic squid taken in violation of the Act, this Part, or any other regulation promulgated under this Act;

(g) Fish for, take, catch, or harvest any Atlantic squid from the FCZ after the fishery has been closed pursuant to § 655.23;

(h) Transfer directly or indirectly, or attempt to so transfer, any United States harvested squid to any foreign fishing vessel, while such vessel is within the FCZ, unless the foreign fishing vessel has been issued a permit, under section 204 of the Act, which authorizes the receipt by such vessel of United States harvested squid;

(i) Refuse to permit an Authorized Officer, or an employee of the National Marine Fisheries Service designated by the Regional Director to make such inspections, to inspect any fishing vessel record, fish dealer/processor reports, or other records relating to the taking, catching, harvesting, landing, first purchase, or sale of Atlantic squid;

(j) Refuse to permit an Authorized Officer to board a fishing vessel subject to such person's control for purposes of conducting any search or inspection in connection with the enforcement of this Act, this Part, or any other regulation promulgated under the Act;

(k) Fail to comply immediately with enforcement and boarding procedures specified in § 655.8;

(l) Forcibly assault, resist, oppose, impede, intimidate, threaten, or interfere with an Authorized Officer in the conduct of any search or inspection under the Act;

(m) Resist a lawful arrest for any act prohibited by this Part;

(n) Interfere with, obstruct, delay, or prevent by any means the apprehension or arrest of another person knowing that such other person has committed any act prohibited by this Part;

(o) Interfere with, obstruct, delay, or prevent by any means the lawful investigation or search in the process of enforcing this Part;

(p) Violate any other provision of this Part, the Act, or any regulation promulgated pursuant thereto.

§ 655.8 Enforcement.

(a) *General.* The operator of any fishing vessel subject to this Part shall immediately comply with instructions issued by an Authorized Officer to facilitate safe boarding and inspection of the vessel, its gear, equipment, fishing vessel record, and catch for purposes of enforcing the Act and this Part.

(b) *Signals.* Upon being approached by a U.S. Coast Guard vessel or aircraft, or other vessel or aircraft authorized to enforce provisions of the Act, the operator of the fishing vessel shall be alert for communications conveying enforcement instructions. VHF-FM radiotelephone is the normal method of communicating between vessels. Should radiotelephone communication fail, however, other methods of communication, including visual signals, may be employed. The following signals extracted from the International Code of Signals are among those which may be used, and are included here for the safety and information of fishing vessel operators:

(1) "L" meaning "You should stop your vessel instantly,"

(2) "SQ3" meaning "You should stop or heave to; I am going to board you," and

(3) "AA AA AA" etc.," which is the call to an unknown station, to which the signaled vessel shall respond by illuminating the vessel's Official Number required by § 655.6.

(c) *Boarding.* A vessel signaled to stop or heave to for boarding shall:

(1) Stop immediately and lay to or maneuver in such a way as to permit the Authorized Officer and his/her party to come aboard;

(2) Provide a safe ladder for the Authorized Officer and his/her party;

(3) When necessary to facilitate the boarding and/or when requested by an Authorized Officer, provide a man rope, safety line, and illumination for the ladder; and

(4) Take such other actions are necessary to ensure the safety of the Authorized Officer and his/her party to facilitate the boarding.

§ 655.9 Penalties.

Any person or fishing vessel found to be in violation of this Part will be subject to the civil and criminal penalty provisions and forfeiture provisions prescribed in the Act, and to 50 CFR Part 620 (Citations) and Part 621 (Civil Procedures).

Subpart B—Management Measures

§ 655.20 Fishing year.

The fishing year for Atlantic squid is the 12-month period beginning on April 1 and ending on March 31 of the following year.

§ 655.21 Allowable levels of harvest.

(a) *Catch Quotas.* The allowed levels of harvest on a fishing year basis for Atlantic squid are 30,000 mt of *Illex illecebrosus* and 44,000 mt of *Loligo pealei.* These levels of harvest are divided into annual catch quotas for vessels of the United States and vessels of foreign nations as follows:

(1) The annual catch quotas for vessels of the United States are 10,000 mt of *Illex illecebrosus* and 14,000 mt of *Loligo pealei.*

(2) The annual catch quotas for vessels of foreign nations are 20,000 mt of *Illex illecbrosus* 30,000 mt of *Loligo pealei.*

(b) *Territorial waters.* These regulations do not limit harvests of Atlantic squid in the waters landward of the FCZ. Harvests from these waters, however, shall be subtracted from the annual domestic quotas set forth in paragraph (a)(1) of this section.

§ 655.22 Reallocation.

(a) *General.* This section establishes a procedure which will be followed to make timely reallocations to foreign fishing vessels of part of the domestic quota which will not be harvested by domestic fishermen during the fishing year. Any reallocation shall be consistent with the objectives of the Fishery Management Plan for the Squid Fishery of the Northwest Atlantic Ocean and in accordance with the criteria and procedures set forth in paragraphs (b) and (c) of this section.

(b) *Criteria.* (1) *Loligo.* The Assistant Administrator shall determine the domestic harvest of *Loligo* by reviewing fishing vessel record and fish dealer/processor record data and any other relevant landings statistics for the first six months of the fishing year (April 1–September 30). If reported domestic harvest (including off-loadings at sea) is equal to or greater than 50 percent of the annual domestic quota of 14,000 mt, no reallocation shall be made. If the reported domestic harvest for the first six months of the fishing year is less than 50 percent of the annual domestic quota, the Assistant Administrator may reallocate up to one-half the difference between reported dometic harvest and the annual domestic quota.

(2) *Illex.* The Assistant Administrator shall determine the domestic harvest of *Illex* by reviewing fishing vessel record and fish dealer/processor report data and any other relevant landing statistics for the first five months of the fishing year (April 1–August 31). If reported domestic harvest (including off-loadings at sea) is equal to or greater than 40 percent of the annual domestic quota of 10,000 mt, no reallocation shall be made. If reported domestic harvest for the first five months of the fishing year is less than 40 percent of the annual domestic quota, the Assistant Administrator may reallocate up to one-half the difference between the reported domestic harvest and the annual domestic quota.

(c) *Procedure.* (1) *Initial Determination.* If the Assistant Administrator determines that a reallocation may be made for either species of Atlantic squid, he shall publish in the Federal Register a notice of intent to reallocate a specified amount of the unharvested portion of the domestic annual quota to the annual quotas established for foreign nations specified in § 655.21. Notice of an intent to reallocate also shall be sent to holders or permits issued under this Part, and to agents of foreign fishing vessels permitted to fish for squid under 50 CFR Part 611, on or before the date of publication of the notice in the Federal Register.

(2) *Public comment.* The public shall be given no less than 15 days from the date of publication of the notice of intent to reallocate to submit written comments concerning the amount of Atlantic squid to be reallocated. Comments shall be sent to the Regional Director.

(3) *Consultation.* During the 15-day public comment period, the Assistant Administrator or a designee shall consult with the appropriate committee of the Mid-Atlantic Fishery Management Council to determine whether the proposed reallocation of Atlantic squid is consistent with the objectives contained in the Fishery Management Plan for the Squid Fishery of the Northwest Atlantic Ocean.

(4) *Final determination.* the Assistant Administrator shall make a final determination of the amount of the species of Atlantic squid to be reallocated after taking into account:

(i) The intent and capability of U.S. fishing vessels to harvest the species of Atlantic squid during the remainder of the fishing year;

(ii) The consistency of any reallocation with the objectives contained in the Fishery Management Plan, for the Squid Fishery of the Northwest Atlantic Ocean;

(iii) The current harvest of the species of Atlantic squid by foreign nations as allowed pursuant to 50 CFR Part 611;

(iv) The most current information available concerning the biological status of the species of Atlantic squid; and

(v) Any other information determined by the Assistant Administrator to be relevant.

(5) *Publication of reallocations.* The Assistant Administrator shall publish regulations in the Federal Register to accomplish any reallocation of any species of Atlantic squid pursuant to paragraph (c)(4) of this section approximately 15 days prior to the effective date of the reallocation. Comments received during the public comment period, all relevant information used by the Assistant Administrator in making a final determination on reallocation, and the most recent catch statistics for domestic and foreign harvest of the species of Atlantic squid to be reallocated shall be summarized in the Federal Register.

(6) *Effective Dates.* (i) *Illex.* Any reallocation of *Illex* shall be effective on or after December 1, and remain in effect to the end of the fishing year on March 31.

(ii) *Loligo.* Any reallocation of *Loligo* shall be effective on or after January 1 and remain in effect to the end of the fishing year on March 31.

§ 655.23 Closure of Fishery.

(a) *General.* The Regional Director shall periodically monitor catches and landings of *Illex* and *Loligo.* The fishery for either species of squid shall be closed when the annual quota, less the anticipated incidental catch during a closure under paragraph (d) of this section, for that species is reached.

(b) *Recommendation of closure.* When 80 percent of either of the annual domestic quotas specified in § 655.21 has been harvested, the Regional Director may make a recommendation to the Assistant Administrator that the fishery for that species be closed, if projections based on fishing vessel record and fish dealer/processor report data that indicate that the annual quota for that species will be reached or exceeded before March 31.

(c) *Notice of closure.* If the Assistant Administrator determines, based on the recommendation of the Regional Director, that a closure of the squid fishery for the relevant species is necessary to prevent the annual species quota from being exceeded, the Assistant Administrator shall:

(1) Notify in advance the Executive Directors of the Mid-Atlantic, New England, and South Atlantic Fishery Management Councils of the closure;

(2) Mail notifications to all holders of permits issued under § 655.5 of the

closure at least 72 hours prior to the effective date of the closure; and

(3) Publish a notice of closure in the Federal Register.

(d) *Incidental catch.* During a period of closure, fishing vessels may catch, take, or harvest the relevant species of squid incidental to fishing for other species of fish, provided that such species of squid constitutes no more than 10 percent by weight of the total catch of all other fish on board the vessel at the end of any fishing trip.

§ 655.24 Size Restrictions [Reserved]

§ 655.25 Gear/Vessel Equipment Restrictions [Reserved]

§ 655.26 Area/Time Restrictions [Reserved]

BILLING CODE 3510-22-M

APPENDIX

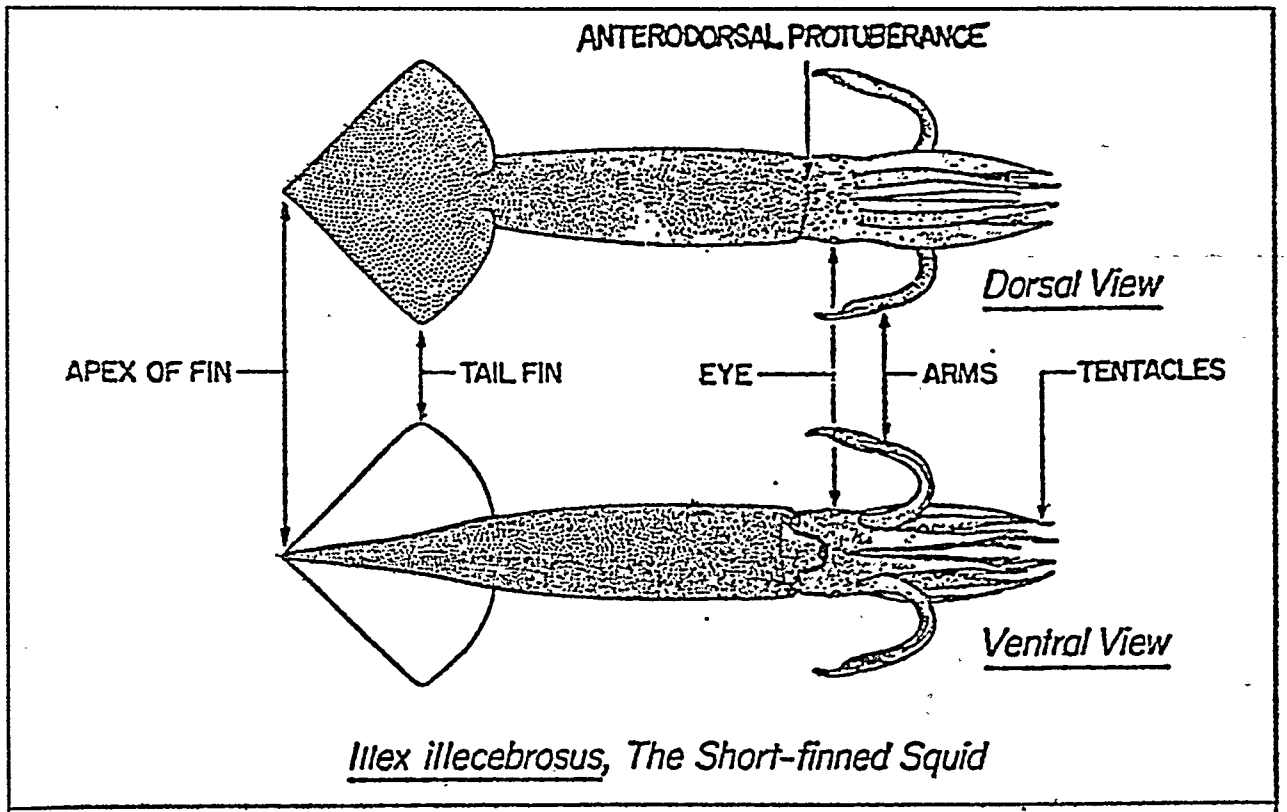

Illex illecebrosus, The Short-finned Squid

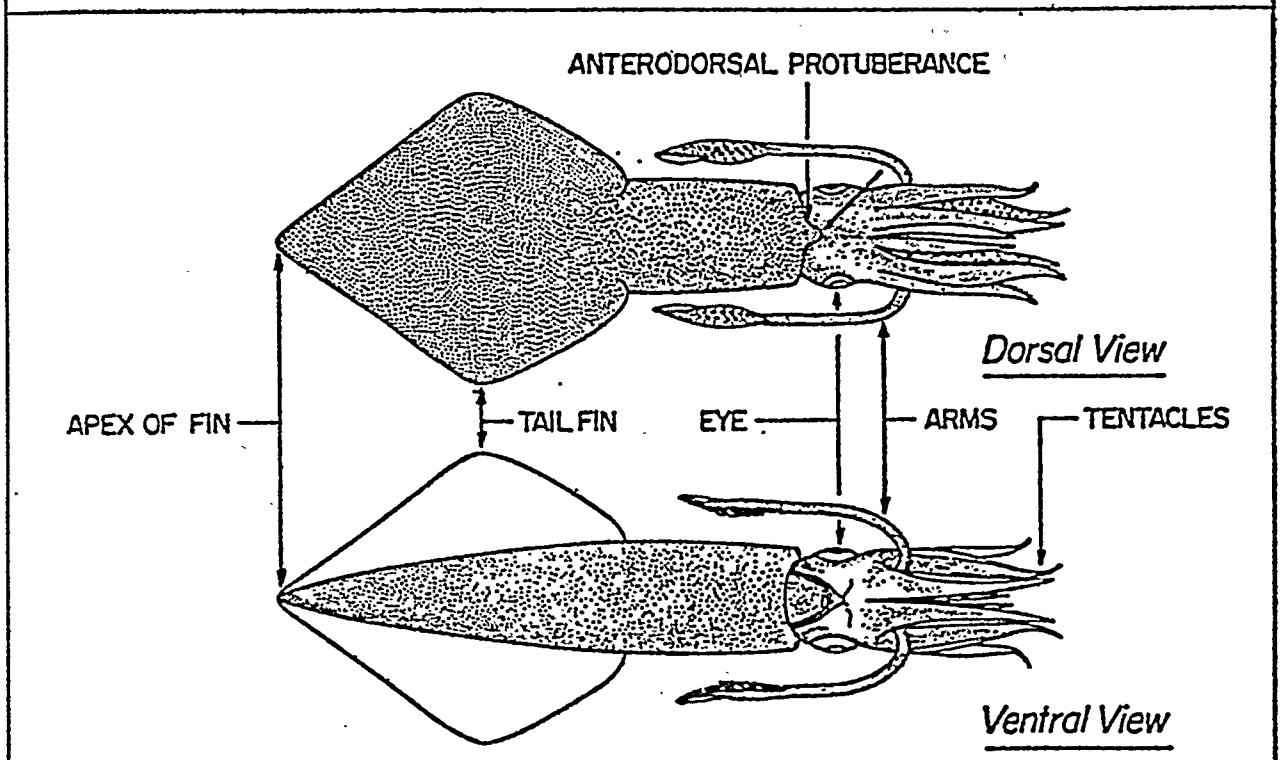

Loligo pealei, The Long-finned Squid

[FR Doc. 79-39767 Filed 12-28-79; 8:45 am]
BILLING CODE 3510-22-C

DEPARTMENT OF COMMERCE

Industry and Trade Administration

15 CFR Chapter III

Change in Chapter Heading

AGENCY: Industry and Trade Administration, Department of Commerce.

ACTION: Final rule.

SUMMARY: This rule redesignates the heading of Chapter III of Title 15, Code of Federal Regulations, from "Industry and Trade Administration" to "International Trade Administration," to reflect a change in the name of the organization which will become effective as of January 1, 1980. This change has been made as a part of the trade reorganization authorized by Reorganization Plan No. 3 of 1979 (44 FR 69273). The content of Chapter III remains unchanged.

EFFECTIVE DATE: January 1, 1980.

FOR FURTHER INFORMATION CONTACT: Michael C. Monroe, Office of Management and Systems, Industry and Trade Administration, Department of Commerce, Washington, D.C. 20230, (202) 377-5436.

Accordingly, Chapter III of Title 15 of the Code of Federal Regulations, presently titled "Industry and Trade Administration," is changed to read "International Trade Administration."

Paul T. O'Day,

Acting Assistant Secretary for Industry and Trade.

December 26, 1979.

[FR Doc. 79-39920 Filed 12-31-79; 8:45 am]

BILLING CODE 3510-25-M

Proposed Rules

Federal Register
Vol. 44, No. 251
Monday, December 31, 1979

This section of the FEDERAL REGISTER contains notices to the public of the proposed issuance of rules and regulations. The purpose of these notices is to give interested persons an opportunity to participate in the rule making prior to the adoption of the final rules.

DEPARTMENT OF AGRICULTURE

Farmers Home Administration

7 CFR Part 1900

Appeal Procedure

AGENCY: Farmers Home Administration, USDA.

ACTION: Proposed rule.

SUMMARY: The Farmers Home Administration (FmHA) proposes to amend its appeal procedures to provide clarity, and make other changes that are aimed at reducing unnecessary hearings and review action. This action is taken as a result of an administrative review.

ADDRESSES: Submit an original and conformed copy of all written comments to the Office of the Chief, Directives Management Branch, Farmers Home administration, Room 6346, Washington, D.C. 20250. All written comments made pursuant to this notice will be available for public inspection at the address given above.

DATES: Comments must be received on or before February 29, 1980.

FOR FURTHER INFORMATION CONTACT: Art Collings (202) 447–8448. Room 5305 South Building, U.S. Department of Agriculture, Washington, D.C. 20250.

SUPPLEMENTARY INFORMATION: FmHA proposes to amend subpart B of Part 1900, Chapter XVIII, Title 7 in the Code of Federal Regulations. The major changes are:

Section 1900.51 *Purpose:* Change to eliminate debt settlement actions, in Part 1864 of this chapter from coverage by this instruction.

Section 1900.52 (b) Examples of ineligibility for appeal dropped from this section and added to new (c).

Section 1900.52(c) (new) Decisions not appealable: Added to provide examples where FmHA decisions are not appealable because of: (1) legal limitations and (2) published regulations.

Section 1900.52 (d) Relettered as (d).

Section 1900.52 (d) *Hearing Officer* relettered as (e). (e)(4) changed to prescribe hearing officer in acceleration cases involving multi-family and/or organizational loans.

Section 1900.52 (e) *Record* relettered as (f).

Section 1900.52 (f) *Review Officer* relettered as (g).

Section 1900.52 (g)(1) changed to add the State Director's designee as a review officer.

Section 1900.52 (g)(2) changed to make the appropriate Deputy Administrator or designee the review officer when the State Director or designee is the hearing officer.

Section 1900.52 (g)(4) changed to provide that only one review will take place in the National Office.

Section 1900.52 (h) (new) notice that the term District Director shall also apply to Assistant District Director.

Section 1900.52 (i) (new) definition of decision-maker added for clarification purposes.

Section 1900.53 (a) changed to add emphasis to FmHA preference that appellants choose meeting with decision-maker prior to requesting a hearing. The change is instituted because of the occurrence of too many hearing requests, where the difference could have been otherwise resolved.

Section 1900.53 (a)(4) (new) added to provide for a single, multi-faceted appeal when corollary issues are involved in a foreclosure action.

Section 1900.53 (b)(2)(iii) renumbered as (a)(5).

Section 1900.53 (b)(2) provides for a second letter notifying appellant of right of hearing, when the appellant's request is not granted as a result of meeting with the decision-maker.

Section 1900.53 (d)(2) changed to provide a 15-day limitation on extending hearing dates, except for verified medical reasons.

Section 1900.53 (d)(4)(vi) changed to reflect that the notes may be taken by the hearing officer. A new (A) added to clarify the type of notes to be taken. A new (C) prescribes that file documents and other written materials will be included as part of the FmHA record.

Section 1900.53 (d)(vii) added to clarify arrangements when a transcript of the hearing is made.

Section 1900.53 (d)(4)(viii) added to provide that either party must notify the other when commencing to tape proceedings and either party may obtain a copy of any taped record for the cost of reproduction.

Section 1900.53 (d)(6) rewritten to emphasize that the hearing officer's decision shall be made without consulting other FmHA employees, except an official for whom the hearing officer is acting as a delegate.

Section 1900.53(d)(7) changed to provide that the decision will be made within 30 working days of the hearing, except where FmHA has ordered a transcript or copy of same, in which instance the decision will be made within 15 working days of receipt of the transcript.

Section 1900.53(g) added to provide for a conclusion to the appeal if no letter appealing the decision of the hearing or the review officer is received within 30 days of their decisions.

Section 1900.53 *Reporting requirements* (new) added to require an annual report by all FmHA offices, with a consolidated State Office report sent to the FmHA National Office.

This proposal has been reviewed under the USDA criteria established to implement Executive Order 12044, "Improving Government Regulations." A determination has been made that this action should not be classified "significant" under those criteria. A Draft Impact Analysis has been prepared and is available from the Office of the Chief, Directives Management Branch, Farmers Home Administration, U.S. Department of Agriculture, Room 6346, South Agriculture Building, Washington, D.C. 20250.

This document has been reviewed in accordance with FmHA Instruction 1901–G, "Environmental Impact Statements." It is the determination of FmHA that the proposed action does not constitute a major Federal action significantly affecting the quality of the human environment and in accordance with the National Environmental Policy Act of 1969 Pub. L. 91–190 and Environmental Impact Statement is not required.

As proposed: Subpart B of Part 1900 reads as follows:

PART 1900—GENERAL

* * * * *

Subpart B—Farmers Home Administration Appeal Procedure

Sec.
1900.51 Purpose.
1900.52 Definitions.
1900.53 Appeal from an initial FmHA decision.
1900.54 Effect on appeal decision.
1900.55 Reporting requirements.
1900.56–1900.100 [Reserved]

Subpart B—Farmers Home Administration Appeal Procedure

§ 1900.51 Purpose.

This Subpart provides a uniform procedure whereby a person or organization may appeal any Farmers Home Administration (FmHA) program administrative action directly affecting such person or organization. This procedure does not apply to Guaranteed loans, debt settlement actions as found in Part 1864 of this Chapter (FmHA Instruction 456.1), Freedom of Information Act, or Privacy Act appeals and is not intended to affect the Suspension and Debarment procedure found at Subpart E of Part 1924 of this Chapter. This procedure takes precedence over all other FmHA appeals procedures affecting applicants, borrowers, or grantees. This procedure will be applicable to administrative decisions made after November 13, 1978.

§ 1900.52 Definitions.

(a) *Appellant.* An appellant is an applicant for FmHA assistance or an FmHA borrower or grantee, either individual or organization, that is directly and adversely affected by an administrative decision by FmHA.

(b) *Directly and adversely affected.* The term "directly and adversely affected" includes having a request for FmHA assistance denied in whole or in part or having FmHA assistance reduced, cancelled, or not renewed. The term "directly and adversely affected" does not include actions where persons or organizations are clearly not eligible such as in the examples cited in paragraph (c) of this Section.

(c) *Decisions not appealable.* (1) Where the FmHA decision was based solely on a limitation of law, such as:

(i) Denial of Section 502 Rural Housing Refinancing of a Debt that is less than five years old.

(ii) Denial or a Section 504 grant to an applicant less than 62 years of age.

(iii) Denial of a community facility loan or a water and waste disposal loan and/or grant when a city or town to be served has a population in excess of 10,000.

(iv) Denial of a community facility loan or a water and waste disposal loan and/or grant to an organization not identified as an eligible applicant by the regulations.

(v) Applications for emergency loans not filed before a prescribed termination date.

(2) Where the FmHA decision was based solely and directly on objective standards in published regulations. Examples include:

(i) Release of basic security for unauthorized purposes.

(ii) Denial of a loan because of confirmed income that is above FmHA published limits.

(iii) Interest credit reduction that is the result of a confirmed income increase.

(iv) A determination of ineligibility for emergency loans based on confirmation or verification by the Agricultural Stabilization and Conservation Service (ASCS) or the Federal Crop Insurance Corporation (FCIC) that the applicant did not have the required production losses of 20 percent or more.

(v) A finding that an applicant for an economic emergency loan is not eligible when it has been *confirmed* that less than 50 percent of such applicant's total income is from farming.

(vi) Security requirements, made by the loan approval official, that are specifically required by FmHA instructions.

(vii) Denial of compensation for construction defects when it has been determined that the contractor is willing and able to correct the deficiencies within the warranty, or otherwise.

(viii) Requirements and conditions designates by law to be developed by agencies other than FmHA. They include, but are not limited to: Davis-Bacon wage rates; flood plain determinations; and archeological and historical areas.

(ix) Property standards. An appeal may only be made where the appellant claims FmHA is misapplying the written standards.

(d) *Hearing.* A hearing, as used in this Subpart, is an informal proceeding at which an appeal from an adverse decision is heard.

(e) *Hearing officer.* The hearing officer will be:

(1) In the case of an appeal of an initial decision by a County Supervisor, the hearing officer will be the District Director having jurisdiction over that County Office. If that District Director has a significant role in the initial determination, the District Director from a nearby geographical District Office will be designated by the State Director. For purposes of this Subpart, the decision to accelerate an account except as provided in paragraph (e)(4) of this section will be deemed to have been made by the County Supervisor initiating such action.

(2) In the case of an appeal of an initial decision by the County Committee, the hearing officer will be the state Director or Acting State Director. However, the District Director may conduct the hearing in behalf of the State Director and forward all material related to the hearing along with a recommendation to the State Director for determination. If the District Director having jurisdiction over the County Office has a significant role in the initial determination, the District Director from a nearby geographical District Office will be designated by the State Director to conduct the hearing in behalf of the State Director as described above.

(3) In the case of an appeal of an initial decision by a District Director, the hearing officer will be the State Director, who may designate a program chief or other State Office official to be the hearing officer.

(4) In the case of an appeal of an initial decision by a State Director, the hearing officer will be the appropriate Program Assistant Administrator or designee. This includes acceleration of multi-family or organizational loans.

(5) In the case of an appeal of an initial decision by an Assistant Administrator, the hearing officer will be the appropriate Deputy Administrator.

(f) *Record.* The term "record" means the FmHA file, papers filed by an appellant, notes or transcript (if any) of a hearing, and decisions made by FmHA officials.

(g) *Review officer.* When the hearing officer is:

(1) The District Director the review officer will be the State Director or designee, except that when a decision to foreclose is appealed the review officer will be the Area Coordinator;

(2) The State Director or designee, the review officer will be the appropriate Deputy Administrator or designee;

(3) The Program Assistant Administrator or designee, the review officer will be the Administrator, or designee.

(4) Regardless of the level of the decision maker and hearing officer, there will only be one review made in the National Office. However, the review provided for in 1900.53 (f)(6), and (h) will always be available except where the Administrator is there view officer.

(h) *District Director.* Wherever the term District Director is used, it will also mean Assistant District Director.

(i) *Decision maker.* The FmHA official who actually makes the specific

decision. For example, if a State Director reviews a preapplication from an organization and authorizes a District Director to include specific items in Form AD 622 "Notice of Preapplication Review Action," the State Director is the decision maker.

§ 1900.53 Appeal from an initial FmHA decision.

(a) If an applicant for FmHA assistance, an FmHA borrower, or an FmHA grantee is directly and adversely affected by an FmHA decision or action, the official taking such action or making the decision will inform that person or organization by letter of the action taken. The letter will include the following:

(1) A statement of the action taken or decision made and all of the specific reason(s) for so doing.

(2) An invitation to call at the decison-making official's office to discuss the decision with that official. The person (or organization) may bring to the meeting any additional information or a representative. A statement that, although FmHA would prefer the person (or organization) accept the invitation to meet with the decision maker, the person or organization may appeal the decision directly to the hearing officer. Except in acceleration notices the statement should read as follows:

"We would like the opportunity to explain in detail why your request has not been approved, explain any possible alternatives, and to explain your rights to appeal. Please call ———— for an appointment."

"FmHA prefers that you meet with us before making a formal appeal. However, you may appeal the above action by writing to *(hearing officer) (address)* within 30 calendar days of the date of this letter, giving the reasons why you believe this matter should be decided differently. This time may be extended an additional 30 days if you cannot notify the hearing officer for reasons beyond your control."

(3) A statement that if the person (or organization) wants the terminated or reduced assistance maintained at the existing level, the decision to reduce or terminate may be stayed pending appeal if requested by the person (or organization) at the discretion of the hearing officer. The appellant will agree to repay any assistance received during the stay for which the appellant is, upon completion of the appeal, determined to have been ineligible.

(4) When an appeal from a foreclosure action is instituted and includes appeal of corollary matters such as denial of moratorium or interest credits, the letter will include a statement that all matters are merged into a single appeal and conducted in accordance with procedures for appealing foreclosures.

(5) In acceleration notices, the statement shall read substantially as found in the "Notice of Acceleration" Exhibit C to Subpart A, Part 1955 of this Chapter.

(b) When the person or organization takes the opportunity for a meeting with the decision-making official, then:

(1) If the meeting results in a resolution of the problem, the official will send the person or organization a letter setting forth the resolution and the reasons for it.

(2) If, as a result of that meeting, the request is not granted, the official will send a letter to the person (or organization) stating the reasons for not doing so, and restating such person's (or organization's) right to a hearing. Except in acceleration notices the letter must be mailed within three working days of the meeting and contain the following:

"If you disagree with this decision and wish to appeal you may appeal the above action by writing to *(hearing officer) (address)* within 30 calendar days of the date of this letter, giving the reasons why you believe this matter should be decided differently. This time may be extended an additional 30 days if you cannot notify the hearing officer for reasons beyond your control."

(c) If a request is received to stay the decision, the hearing officer, based on the facts and circumstances, may stay the decision. An appropriate case for a stay would be if not to grant the stay would make an appeal useless.

(d) When an appellant appeals a decision and requests a hearing the appeal will be handled as follows:

(1) Upon the receipt of the appeal letter, the hearing officer will request the entire file from the decision-making official who will promptly forward the file on the matter to the hearing officer.

(2) The hearing officer will arrange for a hearing to be held as soon as possible but within 30 calendar days of the receipt of the appeal. The hearing will be held at a location convenient to the appellant, decision-making official and hearing officer. If no such place can be agreed on, the hearing officer will select the location. The hearing officer, after reviewing the file, will return it to the office of the decision-maker so that it will be available to the appellant or representative. If the appellant or the decision-maker for good reason is unable to attend a hearing within the 30 calendar day period, the hearing officer, after considering the circumstances, will reschedule the hearing within 15 days of the original hearing date. The 15 day extension may only be exceeded for verified medical reasons.

(3) Failure to appear.

(i) If the appellant or appellant's representative, without reasonable cause fails to appear at the hearing, the appellant's appeal will be deemed to have been concluded.

(ii) If the failure to appear is with reasonable cause and the appellant can demonstrate inability to notify FmHA, the hearing officer will reschedule the hearing at a time convenient to all interested parties, but within 15 days of the initially scheduled date.

(4) The hearing.

(i) The hearing will be an informal preceding at which the appellant will bear the burden of proving the initial decision erroneous. To do so the appellant may provide any information or witnesses the appellant believes should be considered in reaching a proper decision. The appellant may present evidence, witnesses and arguments in support of appellant's complaint, controvert evidence relied on by the FmHA, and question all witnesses. Any evidence may be received by the hearing officer without regard to whether that evidence could be employed in judicial proceedings. A suggested guide for the order of presentation at a hearing is:

(A) The appellant makes statement setting forth why the original decision was erroneous.

(B) The decision-maker, or successor, will explain why the original decision was correct.

(C) The appellant presents evidence, witnesses, and arguments supporting the appellant's position, including questioning of the decision-maker. The witnesses may be questioned by the decision-making official or other FmHA representatives.

(D) Decision-making official, or other FmHA person, presents evidence supporting original decision or rebutting appellant's arguments or evidence. Any witnesses used may be questioned by the appellant.

(E) Summary by appellant and FmHA.

(ii) The decision-making official (or successor) or delegate will be at the hearing and will present evidence if necessary. Any other witnesses or FmHA personnel the decision-making official thinks necessary to fully determine the matter will be at the hearing to present evidence.

(iii) The hearing officer may request additional witnesses to appear or request further information if in the hearing officer's opinion such is necessary to reach a proper decision.

(iv) Before the hearing, the appellant or appellant's representative, unless otherwise prohibited or exempt by law or regulation, may examine, and, at the appellant's expense, copy all relevant documents, records, and regulations of FmHA.

(v) The appellant may be represented by an attorney or any other person at the hearing. All witnesses may be questioned by the hearing officer, appellant (or representative), and the decision-making official (or successor).

(vi) An FmHA employee (not the decision-maker) will take notes at the hearing. The hearing officer may take the notes or assign this responsibility to another FmHA employee.

(A) The notes will *informally reflect* the essential positions, pertinent information presented, and comments made by both parties, *may be in outline form,* AND *need not repeat proceedings* verbatim. They will indicate if the appellant arranged for a transcript.

(B) A typed copy of the notes will be provided to the appellant within 10 working days of the hearing. The appellant will notify FmHA of any changes appellant thinks should be made within 5 working days of receipt of the copy. The suggested changes will be made part of the record even if not agreed to by FmHA.

(C) File documents and other written materials used in the hearing will be included as part of the FmHA record.

(vii) The taking of transcripts is neither required nor prohibited. Either party may arrange to have a transcript of the hearing made at their own expense. When one party has a transcript made the other will make their own arrangements to obtain a copy. Ordinarily FmHA will not have transcripts made. Prior approval of the Administrator is required when transcripts are made or copied for FmHA.

(viii) Either the appellant or FmHA may tape record the proceedings at their own expense. They must notify the other party when the taping begins. Either party may obtain a copy of any tape recording for the cost of reproduction.

(5) For good cause, the hearing officer on the request of either the appellant or an FmHA official may, at the hearing officer's complete discretion, continue the hearing to a future time.

(6) *The decision of the hearing officer shall be made without consulting FmHA employees other than the official a designee is representing* and be based on facts presented at the hearing, appropriate FmHA files, applicable statutes and regulations, and the hearing officer's general knowledge of FmHA program functions.

(7) Within 30 working days of the hearing, the hearing officer will determine what action to take with regard to the appeal, unless FmHA has ordered a transcript in which case the decision will be made within 15 days of receipt of the transcript.

(i) If the initial decision is reversed, the hearing officer will inform the appellant and original decision-making official by letter of the decision, the reason for it, and what action will be taken. Only the State Director or Acting State Director will execute the letter on County Committee decision reversals.

(ii) If the initial decision is upheld or modified but not reversed, the hearing officer will inform the appellant by letter of the decision giving specific reasons, with a copy to the decision-making official. The letter must contain the following statement:

"If you wish to have the above decision further reviewed, you may appeal in writing to (*review officer/address*) within 20 calendar days of the date of this letter explaining why you believe the decision is incorrect. Since this review will be based on the record, including papers filed, FmHA files, notes or transcripts of the appeal meeting, my decision, applicable statutes and regulations, and any *additional written* information you wish to submit, you should include any additional information you think is important and indicate whether you wish to present any information in person."

(e) If the appellant does not request in writing a review of the hearing officer's decision within the 20 calendar day period provided in the letter, the appeal will be considered concluded.

(f) If the appellant appeals to the review officer:

(1) Upon receipt of the appeal the review officer will request that the hearing officer forward the record to the review officer. The hearing officer will promptly do so.

(2) The review officer may obtain a copy of the transcript of the hearing if one was arranged for by the appellant.

(3) If no personal meeting was requested by the appellant, the review officer will review the record on the case and applicable law and regulations; any additional information furnished by the appellant and such additional information as the review officer deems necessary and render a decision within 30 days of receipt of the appeal.

(4) If the appellant indicates a desire to present information in person, the review officer will arrange a meeting for the sole purpose of receiving such additional information. The meeting will be held within 15 calendar days of receipt of the appeal and at the offices of the review official. A final decision will be rendered within 20 calendar days after the meeting.

(5) If the decision of the hearing officer is reversed, the appellant will be informed by letter of the decision and what action will be taken. The decision-making official and the hearing officer will also be notified, with the reasons for reversal provided.

(6) If the hearing officer's decision is upheld or modified but not completely reversed, the appellant will be informed of the decision by letter giving the specific reasons for the decision, with a copy each to the decision-making official and hearing officer. The letter must contain the following statement:

"If you believe the above decision is arbitrary and capricious, that is lacking any rational, factual, or legal basis, you may write the Administrator, FmHA, 14th and Independence Avenue, SW., Washington, D.C. 20250, within 30 days, explaining why. The Administrator's review will be based only on the existing written record. A copy of your letter to the Administrator should be sent to me so that I can expeditiously forward the record to the Administrator."

(g) If a letter appealing the decision of the hearing or review officer is not received within 30 days the appeal will be concluded.

(h) Upon receipt of an appeal from a hearing review officer's decision, the Administrator or a delegate will review the record, which will have been forwarded by the review officer upon receipt of a copy of the letter and determine whether the decision was arbitrary and capricious. If not, the decision will be upheld and the appellant so notified. If the Administrator or a delegate finds the decision to have been arbitrary and capricious, the official will determine what action should be taken and notify all affected parties.

§ 1900.54 Effect on appeal decision.

(a) *Effective date.* When an appeal is concluded, the effective date of the action to be taken will be the originally proposed effective date of the initial decision from which the appeal was taken.

(b) *Legal effect.* When an appeal is concluded the decision will be administratively conclusive. The decision will not, however, be determinative of the legality of the action to be taken.

§ 1900.55 Reporting requirements.

Reports listing the number and type of appeals and disposition reports will be submitted annually to the National Office on Exhibit A. County and District Offices will submit their report to the State Office by the tenth of October. State Offices will prepare a consolidated State report which will be transmitted to the National Office by the twentieth of October.

§§ 1900.56–1900.100 [Reserved]

Attachment: Exhibit A

Check Appropriate Block

FmHA Instruction 1900-B
Exhibit A

/ / County Office / / District Ofice / / State Office / / National Office

ANNUAL REPORT ON APPEALS

Location: _____
City and State

I	Appeals to Decision Maker	
	Disposition	XXXXXX
	1. Differences settled	_____
	2. Appeal letters mailed	_____
	3. Disposition still pending	_____
II	Hearings	
	A. Number held	_____
	B. Disposition	XXXXXX
	1. Decision upheld	_____
	2. Decision overruled	_____
	3. Decision modified	_____
	C. Pending hearings	_____

III Review of Appeals	State Director	Area Coordinator	Assistant Administrator	Administrator
A. Number appeal reviews	_____	_____	_____	_____
B. Disposition	XXXXXXX	XXXXXXX	XXXXXXX	XXXXXXX
1. Decision upheld	_____	_____	_____	_____
2. Decision overruled	_____	_____	_____	_____
3. Decision modified	_____	_____	_____	_____
C. Reviews pending	_____	_____	_____	_____

Authorities: 7 U.S.C. 1989; 42 U.S.C. 1480; delegation of authority by the Secretary of Agriculture, 7 CFR 2.23; delegation of authority by the Asst. Sec. for Rural Development, 7 CFR 2.70.

Dated: December 17, 1979.

James E. Thornton,

Associate Administrator, Farmers Home Administration.

[FR Doc. 79-39766 Filed 12-28-79; 8:45 am]

BILLING CODE 3410-07-M

Office of the Secretary

7 CFR Part 2900

Proposed Amendment Regarding Certification of Essential Agricultural Uses and Requirements; Natural Gas Policy Act

AGENCY: Office of the Secretary, USDA.

ACTION: Proposed rule.

SUMMARY: The Department of Agriculture proposes to amend its regulations certifying essential agricultural uses and requirements under the Natural Gas Policy Act. The proposed amendment is in the form of a definition of the term "process fuel" as it relates to the amounts of interstate natural gas needed for essential agricultural uses necessary for full food and fiber production. The proposed amendment is in response to a number of inquiries concerning whether any boiler fuel use of natural gas may be classed as a "process fuel" in certain agricultural processing activities.

DATES: Written comments are due by 4:30 PM, February 29, 1980

ADDRESS: All written comments should be sent to Weldon Barton, Director, Office of Energy, USDA, Room 226-E, Administration Building, U.S. Department of Agriculture, 14th and Independence Avenue, SW, Washington, D.C. 20250.

FOR FURTHER INFORMATION CONTACT: Weldon Barton, Director, Office of Energy, USDA, Room 226-E, Administration Building, U.S. Department of Agriculture, 14th and Independence Avenue, SW, Washington, D.C. 20250; Telephone Number: 202-447-2455.

SUPPLEMENTARY INFORMATION:

I. Background.
II. Description of Proposal.
III. Public Comment and Hearing Procedures.

I. Background

Under Section 401 of the Natural Gas Policy Act of 1978 (NGPA), the Secretary of Agriculture is required to certify to the Secretary of Energy and the Federal Energy Regulatory Commission (FERC) essential agricultural uses of natural gas and the amounts of natural gas for such essential agricultural uses necessary for full food and fiber production. A final rule containing such certification was issued by the Secretary of Agriculture on May 17, 1979 (44 FR 28782).

The Secretary of Energy and the FERC have incorporated the USDA certification in their rules promulgating and implementing agricultural priority in curtailment plans of interstate pipelines, in accordance with the NGPA.

II. Description of Proposal

There have been a number of instances where requests have been made of the Secretary of Agriculture for an interpretation as to whether any boiler fuel use of natural gas may be regarded as a "process fuel", and therefore be certified under the definition of "essential agriculture use" in section 401(f)(1)(B) "as a process fuel or feedstock in the production of fertilizer, agricultural chemicals, animal feed, or food."

We have been apprised of a number of instances whereby natural gas is used in a boiler to produce steam which is a necessary part of the manufacturing process of products included under Section 401(f)(1)(B). For example, in the manufacture of ammonium nitrate fertilizer pure nitric acid is combined with anhydrous ammonia to produce liquid ammonium nitrate. The liquid nitrate is then passed through evaporators to remove most of the water. The semi-solid material is then passed through a series of dryers to remove all but 0.2 percent moisture, before treating with an anti-caking coating and storing for shipment.

Steam is used as the heat source in the evaporators, and the steam condensate from the evaporators is used in the nitric acid adsorption tower to produce the nitric acid which is a feedstock. In the drying stage the drums contain steam coil heaters that permit the material to be dried under the proper temperature in order to produce a uniform, saleable pelleted fertilizer product. The steam condensate from the drum heaters is also returned to the nitric acid adsorption tower to produce more nitric acid.

Unlike the manufacture of phosphate and potash fertilizers which use natural gas in open flame heaters, ammonium nitrate fertilizers cannot be exposed to open flames or sparks. Ammonium nitrate is highly volatile and is often used as an explosive. The heat must be contained within a vessel.

Another example is the manufacture of vitamins essential as livestock feed supplements. The process of manufacturing vitamins requires the use of steam as a source of process catalyzation to complete the manufacture of a number of different products. Steam is essential to the process as direct fired vessels would destroy the products.

In instances where the manufacturing process includes the boiler use of natural gas as an integral part of the process, such as in the examples cited above, the fact that natural gas is used as a boiler fuel would not necessarily prevent its being used as a "process fuel" under Section 401(f)(1)(B) of the Natural Gas Policy Act. This is in addition to the more common use of "process gas" by direct flame application of natural gas in a manufacturing process and where natural gas is required to maintain termperatures within a critical range for a process to continue.

Where natural gas is used as a boiler fuel for purposes that are not an integral part of the manufacturing process, such as for space heating and generating hot water for plant cleaning, such uses cannot be interpreted as "process fuel" under Section 401(f)(1)(B) of the Natural Gas Policy Act.

III. Public Comment and Hearing Procedures

The public is invited to participate in any aspect of this proposed amendment by submitting data, views or arguments with respect to the proposals herein set forth

Written comments must be submitted by 4:30 PM to the address indicated in the "Addresses" section of this preamble, and should be identified on the outside envelope and on the document with the designation: "Part 2900—Process Fuel." Five copies should be submitted. All comments received will be available for public inspection in Room 5173 South Building, 12th and Independence Avenue, SW, Washington, D.C. 20250 between the hours of 9:00 AM and 4:00 PM Monday through Friday. All comments received by 4:30 PM, February 29, 1980, and other relevant information will be considered by the Director, Office of Energy before final action is taken on this proposed amendment.

Any information or data submitted which is considered by the party who submitted it to be confidential must be so identified and submitted in writing, one copy only. The Director reserves the right to determine the confidential status of the information or data and to treat it accordingly.

§ 2900.2 [Amended]

In consideration of the foregoing, it is proposed to amend Chapter XXIX of Title 7, § 2900.2 Code of Federal Regulations by adding "(e) 'Process fuel' means the direct use of natural gas in a manufacturing process, and that use of natural gas in a boiler where the manufacturing process includes the boiler use of natural gas as an integral part of the process."

(Pub. L. 95-621, 92 Stat. 3350 (15 U.S.C. 3301))

Environmental and Regulatory Analysis

After reviewing this proposed amendment pursuant to USDA's responsibilities under the Natural Environmental Policy Act of 1969, Pub. L. 91-190, 83 Stat. 852 (42 U.S.C. 4321), and the USDA criteria established to implement Executive Order 12044 "Improving Government Regulations," the USDA has determined that the proposed action does not alter the impacts disclosed or conclusions drawn in the Final Impact Analysis and Environmental Impact Statement prepared by the USDA, May 14, 1979, in connection with the Essential Agricultural Uses and Requirements certification rule. The inclusion of certain boiler uses of natural gas in the "process fuel" category relating to production of fertilizer, agricultural chemicals, animal feed, and food will add an unknown amount of natural gas, probably less than 10 billion cubic feet, to the total agricultural gas use of 1,392 billion cubic feet, and probably less than 1 percent of the interstate gas component identified as essential agricultural use in the Final Impact Analysis and Environmental Impact Statement. A copy of the Final Statement is available for inspection and copying in Room 5173 South Building, 12th and Independence, SW, U.S. Department of Agriculture, Washington, D.C. 20250.

Dated: December 21, 1979.

Jim Williams,

Acting Secretary.

[FR Doc. 79-39727 Filed 12-28-79; 8:45 am]

BILLING CODE 3410-01-M

CIVIL AERONAUTICS BOARD

14 CFR Part 241

[Economic Regulations Docket 34015, EDR-393; Dated: December 20, 1979]

Amendment of Statistical Reporting Requirements for Small Carriers and New Entrants, and Elimination of Certain Reporting Requirements for All Certificated Carriers

AGENCY: Civil Aeronautics Board.

ACTION: Notice of Proposed Rulemaking.

SUMMARY: The CAB is, on its own initiative, proposing to use a new form to obtain market data from all small carriers, and from larger newly certificated carriers until such time as the larger new carriers have developed the necessary automatic data processing capability that would enable them to comply with service segment data reporting requirements the CAB now imposes on incumbent carriers of comparable size. The CAB is also proposing to eliminate a number of other reporting requirements, and in response to a petition by the Air Transport Association, it is taking this opportunity to solicit comment on whether or not it should continue to receive financial information on a monthly basis.

DATES: Comments by February 26, 1980. Comments and other relevant information received after this date will be considered by the Board only to the extent practicable.

ADDRESSES: Twenty copies of comments should be sent to Docket 34015, Docket Section, Civil Aeronautics Board, 1825 Connecticut Avenue NW., Washington, D.C. 20428. Individuals may submit their views as consumers without filing multiple copies. Comments may be examined in Room 711, Civil Aeronautics Board, 1825 Connecticut Avenue NW., Washington, D.C., as soon as they are received.

FOR FURTHER INFORMATION CONTACT: Clifford M. Rand, Chief, Data Requirements Division, Civil Aeronautics Board, 1825 Connecticut Avenue NW., Washington, D.C. 20428, (202) 673-6044.

SUPPLEMENTARY INFORMATION: On October 24, 1978, the President signed into law the Airline Deregulation Act of 1978 (Pub. L. 95-504), which permits certificated air carriers greater freedom to establish the prices and services they provide to the traveling public. With the enactment of this legislation, the Board now has a mandate to extend the initiative that have already been taken to ease the pricing and route authority constraints traditionally imposed on certificated carriers.

Within the framework of the new legislation and the initiatives that have already been taken in developing new fare methodologies and route authority programs, we have made a reevaluation of the current reporting requirements and are now taking the first steps to amend reporting requirements accordingly.

The details of the different features of the proposed rule are set out separately under the captions that follow. We view this as a first step in reevaluating the CAB Form 41 Report. In the months and years to come, other reporting requirements will be restructured or eliminated as the regulatory value of the data we are receiving diminishes. It may also be necessary, as time goes on, to develop new reports to meet new and different needs.

Small Carriers and New Entrants

Under current regulations, reporting requirements are scaled to the size of air carriers with smaller carriers subject to less burdensome requirements than larger carriers. This proposal would not alter that arrangement, but it would introduce a new statistical schedule entitled Schedule T-9, "Nonstop Market Report."

The new schedule would be required from all Group I and Group II air carriers. Its purpose is to enable the Board and its staff to analyze the activity in markets served by all smaller carriers, a capability we do not now have. The Board can analyze data on markets served by larger carriers by using service segment data, and, to a lesser degree, the markets served by commuter carriers using Schedule T-1 of CAB Form 298-C.

The new schedule would require disclosure of key traffic and capacity statistics, by flight segment, for all scheduled passenger operations including commuter operations conducted by carriers who hold dual certificated and commuter authority.

The proposed rule would permit large new entrants (those having annual revenues in excess of $75 million during a calendar year) to use the new Schedule T-9 until such time as they have developed the necessary Automatic Data Processing programs to comply with the service segment data reporting requirements now imposed on carriers of comparable size.

We are aware that many of the new carriers have grown from the ranks of commuter air carriers and may be more comfortable with the statistical data reported on Schedule T-1 of CAB Form 298-C. While we believe the new Schedule T-9 is superior to the flight stage data now submitted by commuter carriers, we are soliciting comment on whether the newly certificated carriers would favor reporting their scheduled service statistics in the commuter reporting format they have been using, or the newly designed Schedule T-9, "Nonstop Market Report."

In the final rule, based largely on the comments received, all small certificated carriers (Group I carriers) and medium-sized certificated carriers (Group II carriers) who do not now file service segment data in ADP format (magnetic tapes or punched cards) would use the same schedule to report all of these scheduled services, either the new Schulde T-9 or the CAB Form 298-C Schedule T-1, "Report of Revenue Traffic by On-line Origin and Destination," now being filed by commuter carriers.

Proposed Elimination of Schedules

Expressed in general terms we are proposing to eliminate ten schedules from the CAB Form 41[1] report that we believe have outlived their usefulness. The elimination of the ten schedules listed below, when coupled with the addition of the new service segment report discussed earlier, would reduce the number of schedules in the CAB Form 41 report from 57 to 48.

Schedule No.	Title
A-1	Status of Accounting Plans Required to be Filed.
B-2	General Notes to Financial Statements.
B-4	Allowance for Uncollectible Accounts.
B-11	Aging of Receivables and Payables.
B-14	Summary of Property Obtained Under Long-term Leases.
B-44	Transactions Between Air Carrier Affiliates—Annual Summary.
P-9.2	Distribution of Ground Servicing Expenses by Geographic Location—Group II and Group III Route Air Carriers.
G-42	Security Interests of All Officers and Directors and Compensation Paid to Principal Officers and Directors.
G-43	Compensation and Expenses of Persons and Firms (Other than Directors, Officers and Employees) Earning $20,000 or More During the Calendar Year.
G-44	Corporate and Securities Data.

Schedule A-1 has served no other purpose than to inform users of CAB Form 41 schedules of the status of Accounting Plans air carriers must file with the Board. The Accounting Plans are filed separately from CAB Form 41 schedules and describe certain accounting and reporting procedures used by carriers in preparing the CAB Form 41 Report.

We are proposing to eliminate Schedule A-1 because: (1) the schedule itself contains no substantive information; (2) changes in accounting and reporting procedures which

[1] CAB Form 41 filed with the Office of the Federal Register as part of the original document.

materially affect interpretations of carrier financial reports are required to be disclosed on Schedule P-2, "Notes to CAB Form 41 Report", and (3) users who are truly interested in the level of detail contained in Accounting Plans filed by the carriers can review them directly.

Schedule B-2 is filed by carriers who are required to file annual reports with the Securities and Exchange Commission. The information contained in this schedule is also contained in carrier annual reports filed under Part 248 of the Economic Regulations. In those instances where it is essential that information contained on Schedule B-2 be included with the Form 41 schedules, this information would be disclosed on Schedule P-2, "Notes to CAB Form 41 Report" along with all other substantive matters that materially affect interpretations of the financial statements.

Schedule B-4 has been identified as one of the CAB Form 41 schedules that was developed when detailed analysis of carrier accounts was more necessary than it is today. In the current environment, the Board can assess the reasonableness of expenses related to uncollectible accounts by using other B and P schedules in the CAB Form 41 Report. The beginning and ending balances of account 1290, "Allowance for Uncollectible Accounts" can be identified from Schedule B-1 and the monthly provisions charged to expense accounts can be determined from Schedules P-6 or P-7.

Schedule B-11 is filed only by charter carriers and there seems to be no pressing need to continue this schedule for this group of carriers at a time when more and more of them are providing scheduled services under new authority granted by the Board.

Schedule B-14 was originally adopted by the Board as a means of evaluating the nature and extent of air carrier leasing activities, particularly with respect to financing the acquisition of aircraft through long-term leases. Now that these capitalization has become a generally accepted accounting practice, with extensive disclosure requirements for capitalized and uncapitalized leases in notes to financial statements (the Board requires this information to be disclosed on Schedule P-2, "Notes to CAB Form 41 Report"), Schedule B-14 is no longer necessary.

Schedule B-44 is a complex and burdensome schedule that was intended to measure the flow of resources between the air carrier and its affiliates. In order to be used most effectively, the activity reported on this schedule must be evaluated in relation to the activity reported for prior years. Since the schedule, in its present format, has been in effect for only two years it does not have an extensive history behind it to enhance its value. Nor does it have ahead of it any deep regulatory interest in transactions between an air carrier and its affiliates that cannot be satisfied by special inquiry should the need arise.

Schedule P-9.2 has been used for subsidy purposes to determine economic savings when service is suspended at a particular location. There is, at this point, no apparent reason for continuing to have unsubsidized carriers file it; and to the extent the information is needed from subsidized carriers it can be obtained from them directly under authority delegated to the Director, Bureau of Domestic Aviation.

Schedule G-42 has been used to monitor the security interests of all officers and directors and compensation paid to principal officers and directors. Insofar as security interests are concerned, the Board can rely on reports filed directly by officers and directors pursuant to Subpart A of Part 245 of the Board's Economic Regulations. The data on compensation paid to principal officers and directors has been available to the Board and its staff for rate and subsidy purposes. We are proposing to eliminate this schedule because it has not seen any recent use for rate purposes; nor is it likely to in the foreseeable future. Again, to the extent the information is used for subsidy purposes, it can be obtained under delegated authority from carriers directly concerned.

Schedule G-43 has been used to monitor payments for professional services (legal, medical, advertising, accounting and the like) and other services not routinely connected with the maintenance or routine physical operation of the carrier. It does not now serve any regulatory purpose, and we are proposing its elimination for this reason.

Schedule G-44 contains basic corporate information which seldom changes from year to year (change in legal name and corporate charter dates of consolidations and mergers during the year, *etc.*) and, in addition, data on stock options outstanding at the close of the fiscal year. Most, if not all of this information, is available elsewhere here at the Board. Carriers must petition the Board for changes of name (Part 215); consolidations and mergers affecting the public interest are normally handled in formal proceedings and mentioned in notes to financial statements. Pertinent information on stock options is also contained in notes to financial statements. We are, therefore, proposing the elimination of this schedule as well.

In addition, for unsubsidized carriers, we are proposing to eliminate the current requirement to file Schedule B-5, "Property and Equipment" and Schedule P-5(a), "Components of Flight Equipment Depreciation." These schedules were originally used to compare book depreciation with regulatory depreciation for both rate and subsidy purposes. They are no longer needed for rate purposes but only for subsidy purposes.

Accounting Procedures Statements

All air carriers are currently required to file statements describing the accounting and reporting procedures they use for certain activities. These procedures usually involve management discretion like the service lives and residual values used in depreciating property and equipment, the methods for funding pension plans, and the procedures used in allocating revenues and expenses between operating entities. There are 15 such statements required by various sections of Part 241 and enumerated in section 22(d) and they must be refiled with each policy change regardless of its significance.

All 15 of these statement requirements have been reviewed and we are proposing to eliminate 6 of them as no longer being necessary. In doing this, only the requirement to file the procedure statement will be eliminated. The accounting policy provisions will remain intact as a general guide for carrier accounting policies.

Within the Board, interest in these schedules has diminished in recent years. They came about during the time when almost every significant activity of the carriers was closely scrutinized for its ratemaking implications. This is no longer the case in today's more liberal regulatory environment where the Board has no need to keep abreast of every change in management prerogative in these areas.

A complete listing of the statements we are proposing to eliminate is set out below:

CAB form	Title	Required by
AP-2	Procedures for Retroactive Adjustments Made to Conform Accounts with Mail Rate Actions.	§ 2-4(d)
AP-7	Procedures for Amortization of Developmental and Preoperating Costs and Other Intangibles.	§ 5-5(b), § 6-1070(c), § 6-1880
AP-11	Procedures for Applying Maintenance Burden.	§ 10-5300(c), § 11-5300(c), § 24, Schedule P-6
AP-13	Procedures for the Accrual of Vacation Liability.	§ 6-2120(c)

CAB form	Title	Required by
AP-14	Procedures for Accounting for Investments in Investor Controlled and Other Associated Companies, Including Change in Status from Associated to Investor Controlled and vice versa.	§ 6-1510
AP-15	Procedures of Accounting for Pension Plans.	§ 2-19, § 13-57

Monthly Financial Information

Current regulations require route air carriers to report certain financial information with the Board each month. Large route carriers file balance sheets and statements of operations (income statements) with the Board each month while medium-sized and smaller carriers are filing only balance sheets.

On November 13, 1978, the Air Transport Association of America petitioned the Board for rulemaking to eliminate these reporting requirements. The ATA contended that: (1) The Board has never expressed a regulatory need for balance sheets and income statements on a monthly basis; (2) the termination of these monthly filings would be consistent with the national policy to eliminate unnecessary Federal reporting requirements; and (3) the possibility of an inequitable disclosure of financial information would be avoided if monthly statements were not filed with the Board where they are vulnerable to requests for information under the Freedom of Information Act (FOIA).

The Board is currently using monthly financial statements to keep abreast of changing economic developments in the industry as a whole and in monitoring changes in the financial condition of individual carriers with an eye toward detecting potential problems. Under the Deregulation Act of 1978, the Board has been directed to continue this sort of monitoring function. Section 401(r) of the Act extends the Board's regulatory responsibility to monitor the fitness and ability of all air carriers to provide air transportation service. In addition, Section 1601 of the Act clearly expresses a Congressional intent to have the Board monitor and report on industry economics during the transition to deregulation.

Neverthless, we believe now would be an opportune time to explore alternatives to the current reporting that would yield the greatest benefit to the Board with the smallest burden to the carriers. In this rulemaking proceeding, it has been decided to solicit comments on each of the alternatives now being considered.

The first alternative would be to continue the current reporting but make it consistent for all carrier groups. This means we would be requiring small scheduled service carriers to file an income statement as well as a balance sheet.

The second alternative would involve eliminating the requirement to file monthly balance sheets. For large carriers this would mean receiving only the monthly income statement. For medium-sized and smaller carriers we would substitute a requirement to file an income statement for the current requirement to file a balance sheet.

The third alternative would involve eliminating the monthly balance sheet and income statement and have carriers report six key income and expense data elements on a monthly basis. These six key income and expense elements are: (1) Total Operating Revenues, (2) Total Operating Expenses, (3) Operating Profit or Loss, (4) Net Income, (5) Passenger Revenues-Scheduled Service, and (6) Public Service Revenues (Subsidy).

Finally, because the Board does use the monthly information, we do not believe continuing this collection, or some variation thereof, is inconsistent with national policy or the Board's own report reduction program. Nor are we persuaded by the argument that the vulnerability of this information to FOIA requests for information does harm to the investing public by creating the possibility that enterprising investors could obtain information to substantially reduce their market risks at the expense of others.

Since the Board will be guided by a comparison of its needs in relation to the burdens each alternative would impose, we are requesting carriers to comment specifically on:

1. The man-hour and dollar costs associated with complying with the current requirements; 2. The man-hours and dollar costs associated with providing a monthly income statement only. Small and medium-sized carriers (classified as Group I and Group II carriers) should compare the trade off between filing a balance sheet and filing an income statement;

3. Whether monthly information could be provided sooner than 30 days after the close of the month assuming (a) a monthly balance sheet and income statement and (b) only an income statement; and

4. The impact on air carriers of eliminating confidential treatment of monthly financial statements now provided in Section 22(b) of Part 241 of the Economic Regulations.

Latin American Entity

The Airline Deregulation Act requires the Board to revise, on a semiannual basis, the standard industry fare levels on the basis of changes in costs per available seat-mile of all domestic operations, including Puerto Rico and the Virgin Islands.

At present, these operations are being reported among Latin American operations by several carriers. Among the other changes being proposed, the definition of "Domestic" operations now contained in Part 241 would be redefined so as to include Puerto Rico and Virgin Islands operations. This change would comport with what was envisioned under the Act and, since it is a relatively minor change, it should not impose any significant burden on the carriers.

Interim Waiver of Filing Requirements

This rule proposes the elimination of ten CAB Form 41 schedules that are due at the Board on March 30, 1980. We recognize that responsible carriers will begin preparing these schedules while this proposal is still under consideration. In order to prevent the carriers from expending their resouces in preparing these schedules that the Board may ultimately find are not needed, the requirement to file them on or before the due dates specified in Part 241 will be waived pending the outcome of this proceeding. This waiver will be issued under authority delegated to the Director, Office of Economic Analysis in 14 CFR 385.27(c). If the Board ultimately decides to retain any of these ten schedules, carriers will be notified and allowed 30 days to file the schedules for periods ended December 31, 1979.

All other aspects of this notice are intended to become effective June 30, 1980.

Proposed Rule

The Board proposes to amend Part 241, Uniform System of Accounts and Reports for Certificated Air Carriers (14 CFR Part 241) as follows:

1. The Table of Contents would be amended to revoke and reserve line 2-19 now entitled as Accounting for Pension Plans.

2. Section 03 would be amended to read:

Section 03 "Definitions for purposes of this system of accounts and reports"

* * * * *

Air carrier—any citizen of the United States who undertakes, whether directly or indirectly or by a lease or any other arrangement, to engage in air transportation.

Air carrier, charter—an air carrier holding a certificate issued under Section 401(d)(3) of the Federal Aviation

Act of 1958, as amended, or a special operating authorization issued under Section 417 of the Act.

Air carrier, route—an air carrier holding a Certificate of Public Convenience and Necessity pursuant to Section 401(d) (1), (2), (5) or (7) of the Federal Aviation Act of 1958, as amended, authorizing it to engage in air transportation over a route, or routes, designated by the Board.

Air carrier, surviving—* * *

* * * * *

Air transportation—* * *

Air transportation, charter—air transportation authorized pursuant to section 401(d)(3) or Section 417 of the Act.

Airworthiness (or Airworthy)—* * *

* * * * *

Service, scheduled—transport service operated pursuant to published flight schedules, including extra sections and related nonrevenue flights.

3. Paragraph (c) of Section 04 would be amended to read:

Section 04 "Air Carrier Groupings and Standard Name Abbreviations"

* * * * *

(c) * * *

Name	Abbreviation	Subsidized (Yes or No)
Group I Air Carriers:		
Aero Mech, Inc	Aero Mech	No.
Aeronaves de Puerto Rico, Inc.	Aeronaves	No.
Air Florida, Inc	Air Florida	No.
Air Micronesia, Inc	Air Micronesia	No.
Air Midwest, Inc	Air Midwest	Yes.
Air New England, Inc	Air New England	Yes.
Air Wisconsin, Inc	Air Wisconsin	No.
Altair Airlines, Inc	Altair	No.
Apollo Airways, Inc	Apollo	No.
Aspen Airways, Inc	Aspen	No.
Big Sky Airlines, Inc	Big Sky	No.
Chicago Helicopter Airways, Inc.	Chicago Helicopter	No.
Cochise Airlines, Inc	Cochise	Yes.
Coleman Air Transport Corporation.	Coleman	No.
Colonial Airlines, Inc	Colonial	No
Conner Air Lines, Inc	Conner	No.
DHL Airways, Inc	DHL Airways	No.
Empire Airlines, Inc	Empire	No.
Evergreen International Airlines, Inc.	Evergreen	No.
Federal Express Corp.	Federal Express	No.
Gem Investors, Inc. d/b/a Gem State Airlines.	Gem State	No.
Golden West Airlines, Inc.	Golden West	No.
Great Northern Airlines, Inc.	Great Northern	No.
Imperial Airlines, Inc.	Imperial	No.
Jet Executive International, Inc.	Jet Executive	No.
Jet Fleet Corporation	Jet Fleet	No.
Kodiak-Western Alaska Airlines, Inc.	Kodiak	Yes.
Mackey International Inc.	Mackey	No.
McCulloch International Airlines, Inc.	McCulloch	No.
Midway Airlines, Inc	Midway	No.
Midway (Southwest) Airlines.	MSA	No.
Mississippi Valley Airlines, Inc.	Mississippi Valley	No.
Modern Airways, Inc	Modern	No.
Munz Northern Airlines, Inc.	Munz	No.
New Haven Airways, Inc.	New Haven	No.
New York Airways, Inc	N.Y. Airways	No.
Reeve Aleutian Airways, Inc.	Reeve	No.
Rich International Air Lines, Inc.	Rich	No.
Sky West Aviation, Inc	Sky West	Yes.
Southeast Airlines, Inc	Southeast	No.
Southern Air Transport, Inc.	Southern Air Transport.	No.
Swift Aire Lines, Inc	Swift Aire	No.
Trans Carib Air, Inc	Trans Carib	No.
Wright Air Lines, Inc	Wright	No.
Zantop International Airlines, Inc.	Zantop	No.
Group II Air Carriers.		
Air California, Inc	Air-Cal	No.
Alaska Airlines, Inc	Alaska	Yes.
Aloha Airlines, Inc	Aloha	No.
Hawaiian Airlines, Inc	Hawaiian	No.
Wien Air Alaska	Wien	Yes.
Group III Air Carriers:		
Airlift International, Inc	Airlift	No.
American Airlines, Inc.	American	No.
Braniff Airways, Inc	Braniff	No.
Capitol International Airways, Inc.	Capitol	No.
Continental Air Lines, Inc.	Continental	No.
Delta Air Lines, Inc	Delta	No.
Eastern Air Lines, Inc.	Eastern	No.
The Flying Tiger Line, Inc.	Flying Tiger	No.
Frontier Airlines, Inc	Frontier	Yes.
Hughes Air Corp., d/b/a/ Hughes Airwest.	Airwest	Yes.
National Airlines, Inc	National	No.
Northwest Airlines, Inc	Northwest	No.
Overseas National Airways, Inc.	Overseas	No.
Ozark Air Lines, Inc	Ozark	Yes.
Pan American World Airways, Inc.	Pan American	No.
Piedmont Aviation, Inc	Piedmont	Yes.
PSA-Pacific Southwest Airlines.	PSA	No.
Republic Airlines, Inc	Republic	Yes.
Seaboard World Airlines, Inc.	Seaboard	No.
Southwest Airlines Company.	Southwest	No.
Texas International Airlines, Inc.	Texas	No.
Transamerica Airlines, Inc.	Transamerica	No.
Trans World Airlines, Inc.	Trans World	No.
United Airlines, Inc	United	No.
USAir, Inc	USAir	No.
Western Air Lines, Inc	Western	No.
World Airways, Inc	World	No.

4. Paragraph (d) of Sec. 2-4 would be revised to read:

Sec. 2-4 Accounting period.

* * * * *

(d) Expenditures charged directly or amortized to operations within one accounting year shall not be reversed in a subsequent accounting year and reamortized or charged directly against operations of subsequent years except that retroactive adjustments are permitted where necessary to conform with adjustments required by the Civil Aeronautics Board for ratemaking purposes.

Sec. 2-19 [Reserved]

5. Section 2-19 accounting for pension plans would be revoked and reserved.

6. Paragraph (b) of Sec. 5-5 would be amended to read:

Sec. 5-5 Other assets.

* * * * *

(b) Deferred charges having a definite time incidence shall be amortized over the periods to which they apply.

Section 6—Amended

7. Section 6, *Objective classification of balance sheet elements* would be amended by:

1510 [Amended]

A. Revoking and reserving paragraph (b) of the instructions for Account 1510, *Investments in Associated Companies.*

1870 [Amended]

B. Revoking and reserving paragraph (c) of the instructions for Account 1870, *Property Acquisition Adjustment.*

C. Deleting the last sentence and the word "leasehold" from the instructions for Account 1880 so that the instruction reads:

1880 Intangible assets.

Record here the cost of patents, copyrights and other intangible properties, rights and privileges acquired as a part of a business from other air carriers and other intangibles not provided for elsewhere. This account shall be subdivided to reflect the nature of each intangible asset included in this account.

2120 [Amended]

D. Revoking paragraph (c) of the instructions for Acount 2120, *Accrued Vacation Liability.*

8. Section 19-3 would be amended to read:

Sec. 19-3 Accessibility and transmittal of data.

Each air carrier shall maintain its prescribed operating statistics in a manner and at such locations as will permit ready availability for examination by representatives of the Board. All Group I and Group II carriers shall transmit to the Board on a monthly basis individual flight stage data for scheduled services as prescribed in the reporting instructions for Schedule T-9 in Section 25 of this Part. All Group III carriers shall transmit to the Board on a monthly basis individual flight stage data for scheduled services as prescribed in Section 19-5, summarized by flight number, service segment, service class, and aircraft type. Group III air carriers shall utilize either magnetic ADP tapes or ADP punched

cards for transmitting the prescribed data to the Board. All ADP-oriented records shall be transmitted in accordance with standard practices established by the Board's Office of Comptroller. All such data shall be received by the Civil Aeronautics Board at its offices in Washington, D.C., no later than 30 days following the close of the month to which applicable.

9. Paragraphs (c), (g), (h), and (i) of Section 21 would be amended to read:

Sec. 21 Introduction to system of reports.

* * * * *

(c) The prescribed sysem of reports provides that the frequency of reporting shall be monthly for some schedules, quarterly for some, semiannually for one, and annually for others. It also provides in some areas for the classification of air carriers into Group I, Group II, and Group II, with the form and content differentiated as between groups.

* * * * *

(g) Four separate air carrier entities shall be established for air carriers conducting scheduled service for the purpose of submitting the prescribed reports. They are as follows: (1) Domestic operations; (2) operations via the Atlantic Ocean; (3) operations via the Pacific Ocean; and (4) operations in Latin American areas. With respect to the first classification, the domestic entity shall embrace all operations within and between the 50 States of the United States, the District of Columbia, the Commonwealth of Puerto Rico and the United States Virgin Islands, and shall also include Canadian transborder operations. The reports to be submitted by each entity shall be comparable to those required of a distinct legal entity whether the reporting entity constitutes such an entity, a semiautonomous physically separated operating division of the carrier, or an entity established for reporting purposes only.

(h) Each air carrier predominantly engaged in conducting charter activities shall comprise a single reporting entity; however, separate data shall be reported on Schedule P-3.1 and Schedule T-3.1 for domestic operations and international operations. The domestic entity will embrace all operations within and between the Commonwealth of Puerto Rico, and the United States Virgin Islands. All other operations shall be considered international.

(i) The entities for which separate reports shall be made by the different route and charter air carriers are set forth below:

Air carrier	Entities
Aero Mech, Inc	Domestic.
Aeronaves de Puerto Rico	Do.
Airlift International, Inc	Domestic, Latin America.
Air California, Inc	Domestic.
Air Florida, Inc	Do.
Air Micronesia, Inc	Pacific.
Air Midwest, Inc	Domestic.
Air New England, Inc	Do.
Air Wisconsin, Inc	Do.
Alaska Airlines, Inc	Do.
Aloha Airlines, Inc	Do.
Altair Airlines, Inc	Do.
American Airlines, Inc	Domestic, Latin America.
Apollo Airways, Inc	Domestic.
Aspen Airways, Inc	Do.
Big Sky Airlines, Inc	Do.
Braniff Airways, Inc	Domestic, Latin America. Atlantic, Pacific.
Capitol International Airways, Inc.	Domestic, International.
Chicago Helicopter Airways, Inc.	Domestic.
Cochise Airlines, Inc	Do.
Coleman Air Transport Corporation.	Do.
Colonial Airlines, Inc	Do.
Connor Air Lines, Inc	Do.
Continental Air Lines, Inc	Domestic, Pacific.
Delta Air Lines, Inc	Domestic, Latin America, Atlantic.
DHL Airways, Inc	Domestic.
Eastern Air Lines, Inc	Domestic, Latin America.
Empire Airlines, Inc	Domestic.
Evergreen International Airlines, Inc.	Domestic, International.
Federal Express Corp	Domestic.
The Flying Tiger Line, Inc	Domestic, Pacific.
Frontier Airlines, Inc	Domestic.
Gem State Investors, Inc. d/b/a Gem State Airlines.	Do.
Golden West Airlines, Inc	Do.
Great Northern Airlines, Inc	Do.
Hawaiian Airlines, Inc	Domestic, Pacific.
Hughes Air Corp. d/b/a Hughes Airwest.	Domestic.
Imperial Airlines, Inc	Do.
Jet Executive International, Inc.	Do.
Jet Fleet Corporation	Do.
Kodiak-Western Alaska Airlines, Inc.	Do.
Mackey International Inc	Do.
McCulloch International Airlines, Inc.	Do.
Midway Airlines, Inc	Do.
Midway (Southwest) Airlines	Do.
Mississippi Valley Airlines, Inc.	Do.
Modern Airways, Inc	Domestic, International.
Munz Northern Airlines, Inc	Domestic.
National Airlines, Inc	Domestic, Latin America, Atlantic.
New Haven Airways, Inc	Domestic.
New York Airways, Inc	Do.
Northwest Airlines, Inc	Domestic, Pacific, Atlantic.
Overseas National Airways, Inc.	Domestic, International.
Ozark Air Lines, Inc	Domestic.
Pan American World Airways, Inc.	Domestic, Latin America, Atlantic, Pacific.
Piedmont Aviation, Inc	Domestic.
PSA-Pacific Southwest Airlines, Inc.	Do.
Reeve Aleutian Airways, Inc	Do.
Republic Airlines, Inc	Do.
Rich International Airlines, Inc	Domestic, International.
Seaboard World Airlines, Inc	Domestic, Atlantic.
Sky West Aviation, Inc	
Southeast Airlines, Inc	Domestic, Latin America.
Southern Air Transport, Inc	Domestic.
Southwest Airlines Company	Do.
Swift Aire, Inc	Do.
Texas International Airlines, Inc.	Domestic, Atlantic, Pacific.
Trans Carib Air, Inc	Domestic, Atlantic.
Transamerica Airlines, Inc	Domestic, International.
Trans World Airlines, Inc	Domestic, Atlantic, Pacific.
United Airlines, Inc	Domestic.
USAir, Inc	Do.
Western Air Lines, Inc	Domestic, Latin America.
Wien Air Alaska	Domestic.
World Airways, Inc	Domestic, International.
Wright Airlines, Inc	Domestic.
Zantop International Airlines, Inc.	Do.

Section 22 [Amended]

10. Section 22, *General reporting instructions* would be amended by:

A. Revising the list of schedules in CAB Form 41 Report to read:

List of Schedules in CAB Form 41 Report

Schedule No.	Schedule title	Filing frequency	Applicability by carrier group I	II	III
A	Certification	Quarterly	X	X	X
A-2	Controlling Person's Certification	Annually	(1)	(1)	(1)
B-1	Balance Sheet	Monthly	X	X	X
B-3	Statement of Changes in Stockholder Equity	Quarterly	(1)	X	X
B-5	Property and Equipment	do	(1)	(1)	(1)
B-7	Airframes and Aircraft Engines Acquired	do	(1)	(1)	(1)
B-7(a)	Reinvestment of Flight Equipment Capital Gains	(1)	(1)	(1)	(1)
B-7(b)	Flight Equipment Acquired	Quarterly	—	—	(1)
B-8	Property and Equipment Retired	do	X	X	X
B-8(a)	Flight Equipment Capital Gains Invested or Deposited for Investment in Flight Equipment.	(1)	(1)	(1)	(1)
B-10	Unamortized Developmental and Preoperating Costs	Quarterly	X	X	X
B-12	Statement of Changes in Financial Position	do	X	X	X
B-13	Summary of Projected Financial Commitments and Related Deposits	do	(1)	X	X
B-41	Receivables, Payables and Investments Relating to Affiliates and Other Investment Data.	Annually	X	X	X
B-43	Inventory of Airframes and Aircraft Engines	do	X	X	X
B-46	Long-term and Short-term Nontrade Debt	do	(1)	(1)	X
P-1.1	Statement of Operations	Quarterly	X	—	—

List of Schedules in CAB Form 41 Report—Continued

	Schedule title	Filing frequency	Applicability by carrier group		
			I	II	III
P-1.2	Statement of Operations	do	—	X	X
P-1(a)	Interim Statement of Operations	Monthly	X	X	X
P-2	Notes to CAB Form 41 Report	Quarterly	X	X	X
P-2(a)	Revenue Market Report	do	—	—	(5)
P-3	Transport Revenues; Depreciation and Amortization; Nonoperating Income and Expense (Net).	do	(5)	(5)	(5)
P-3.1	Transport Revenues	do	(5)	(5)	(5)
P-3(a)	Income Taxes	do	—	—	(5)
P-4	Transport-related Revenues and Expenses; Explanation of Extraordinary Items and Cumulative Effect of Accounting Changes on Prior Years; Explanation of Prior Period Adjustments and Dividends Declared.	Quarterly	(5)	(5)	(5)
P-5.1	Aircraft Operating Expenses-Group I carriers	do	X	—	—
P-5.2	Aircraft Operating Expenses—Group III air carriers	do	—	X	X
P-5(a)	Components of Flight Equipment Depreciation	do	(5)	(5)	(5)
P-6	Maintenance, Passenger Service and General and Administrative Expense Functions—All Air Carrier Groups.	do	X	X	X
P-7	Aircraft and Traffic Servicing, Promotion and Sales, and General and Administrative Expense Function—Group II and Group III air carriers.	do	—	X	X
P-8	Aircraft and Traffic Servicing, and Promotion and Sales Expense Subfunctions—Group III air carriers.	do	—	—	X
P-10	Employment Statistics by Labor Category	Annually	X	X	X
P-12	Fuel Inventories and Consumption	Monthly	X	X	X
P-12(a)	Fuel Consumption by Type of Service and Specific Operational Markets	do	X	X	X
T-1(a)	Traffic and Capacity Statistics by Class of Service	do	X	X	X
T-1(b)	Traffic and Capacity Statistics by Class of Service-Scheduled Services	do	—	X	X
T-1(c)	Traffic and Capacity Statistics by Class of Service-NonScheduled Services	do	—	X	X
T-2(a)	Traffic, Capacity, Aircraft Operations, and Miscellaneous Statistics by Type of Aircraft.	Quarterly	X	X	X
T-2(b)	Traffic, Capacity, Aircraft Operations, and Miscellaneous Statistics by Type of Aircraft.	do	X	X	X
T-3(a)	Airport Activity Statistics—Revenue Service	do	X	X	X
T-3(b)	Airport Activity Statistics—Revenue Service	do	X	X	X
T-3(c)	Airport Activity Statistics—Nonscheduled Revenue Service	do	X	X	X
T-3.1	Statement of Traffic and Capacity Statistics	Monthly	(5)	(5)	(5)
T-6	Report of Civil Aircraft Charters	Quarterly	(6)	(6)	X
T-7	Statistical Market Report	Monthly	—	—	X
T-8	Report of Section 418 Operations	Semiannually	(7)	(7)	(7)
T-9	Nonstop Market Report	Monthly	(5)	(5)	—
G-41	Persons Holding More Than 5 Per Centum of Respondents Capital Stock or Capital.	Annually	X	X	X

[1] In accordance with the provisions of Section 235.4 and 235.5 of Part 235 of this Subchapter.
[2] Applicable to all carriers except local service carriers.
[3] Applicable only to local service carriers.
[4] Applicable only to subsidized carriers.
[5] Applicable to all carriers conducting scheduled operations.
[6] Applicable to charter carriers engaged in charter operations.
[7] Applicable to all carriers holding Section 418 certificates.

B. Revising the list of Due Dates of Schedules in CAB Form 41 Report to read:

Due Dates of Schedules in CAB Form 41 Report

Due Dates[1] and Schedule No.

January 20—P-12, P-12(a)
January 30—B-1, P-1(a), T-1, T-2, T-3, T-3.1, T-6, T-7, T-9
February 10[2] A, B-1, B-3, B-5, B-7, B-7(b), B-8, B-10, B-12, B-13, P-1.1, P-1.2, P-2, P-2(a), P-3, P-3.1, P-3(a), P-4, P-5.1, P-5.2, P-5(a), P-6, P-7, P-8, P-10, T-8
February 20—P-12, P-12(a)
March 1—B-1, P-1(a), T-1, T-3.1, T-7, T-9
March 20—P-12, P-12(a)
March 30—A-2, B-1, B-41, B-43, B-46, P-1(a), G-41, T-1, T-3.1, T-7, T-9
April 20—B-12, P-12(a)
April 30—B-1, P-1(a), T-1, T-2, T-3, T-3.1, T-6, T-7, T-9

[1] Due dates falling on a Saturday, Sunday or national holiday will become effective the first following work day.
[2] B and P reporting dates are extended to March 30, if preliminary schedules are filed at the Board by February 10.

May 10—A, B-1, B-3, B-5, B-7, B-7(b), B-8, B-10, B-12, B-13, P-.1.1, P-1.2, P-2, P-2(a), P-3, P-3.1, P-3(a), P-4, P-5.1, P-5.2, P-5(a), P-6, P-7, P-8
May 20—P-12, P-12(a)
May 30—B-1, P-1(a), T-1, T-3.1, T-7, T-9
June 20—P-12, P-12(a)
June 30—B-1, P-1(a), T-1, T-3.1, T-7, T-9
July 20—P-12, P-12(a)
July 30—B-1, P-1(a), T-1, T-2, T-3, T-3.1, T-6, T-7, T-9
August 10—A, B-1, B-3, B-5, B-7, B-7(b), B-8, B-10, B-12, B-13, P-1.1, P-1.2, P-2, P-2(a), P-3, P-3.1, P-3(a), P-4, P-5.1, P-5.2, P-5(a), P-6, P-7, P-8, T-8
August 20—P-12, P-12(a)
August 30—B-1, P-1(a), T-1, T-3.1, T-7, T-9
September 20—P-12, P-12(a)
September 30—B-1, P-1(a), T-1, T-3.1, T-7, T-9
October 20—P-12, P-12(a)
October 30—B-1, P-1(a), T-1, T-2, T-3, T-3.1, T-6, T-7, T-9
November 10—A, B-1, B-3, B-5, B-7, B-7(b), B-8, B-10, B-12, B-13, P-1.1, P-1.2, P-2, P-2(a), P-3, P-3.1, P-3(a), P-4, P-5.1, P-5.2, P-5(a), P-6, P-7, P-8
November 20—P-12, P-12(a)
November 30—B-1, P-1(a), T-1, T-3.1, T-7, T-9
December 20—P-12, P-12(a)
December 30—B-1, P-1(a), T-1, T-3.1, T-7, T-9

C. In paragraph (d), revoking and reserving paragraphs (d)(2), (d)(7), (d)(11), (d)(13), (d)(14) and (d)(15).

D. Revising paragraph (e) to read:

(e) All financial data reported on B, P, and G schedules shall reflect the status of the air carrier's books of acount for the period for which report is being made and shall conform to the instructions of this Uniform System of Accounts and Reports. At the option of the air carrier financial data may be reported in thousands of dollars by Group III air carriers, and in whole dollars by Group I and Group II air carriers, by either dropping or rounding the hundreds of dollars and the cents, respectively, provided all amounts are balanced within and between schedules and zero digits are inserted for the actual money amounts eliminated.

Section 23 [Amended]

11. Section 23, *Certification and Balance Sheet Elements* would be amended by:

Schedule A-1 [Amended]

A. Revoking the title and reporting instructions for Schedule A-1, *Status of Accounting Plans Required to be Filed.*

B. Revising the paragraph (b) and revoking and reserving paragraph (c) of the reporting instructions for Schedule B-1 to read:

Schedule B-1—Balance Sheet

* * * * *

(b) This schedule shall reflect the balances at the close of business on the last day of each calendar month for the overall or system operations of each air carrier in conformance with the provisions of sections 4, 5, and 6.

(c) Reserved.

* * * * *

Schedule B-2 [Amended]

C. Revoking the title and reporting instructions for Schedule B-2, *General Notes to Financial Statements*

Schedule B-4 [Amended]

D. Revoking the title and reporting instructions for Schedule B-4, *Allowances for Uncollectible Accounts*

E. Revising paragraph (a) of the reporting instructions for Schedule B-5 to read:

Schedule B-5—Property and Equipment

(a) This schedule shall be filed by all subsidized carriers.

* * * * *

Schedule B-11 [Amended]

F. Revoking the title and reporting instructions for Schedule B-11, *Aging of Receivables and Payables*

Schedule B-14 [Amended]

G. Revoking the title and reporting instructions for Schedule B-14, *Summary of Property Obtained Under Long-Term Leases*

Schedule B-44 [Amended]

H. Revoking the title and reporting instructions for Schedule B-44, *Transactions Between Air Carriers and Affiliates—Annual Summary*

Section 24 [Amended]

12. Section 24, *Profit and Loss Elements* would be amended by:

A. Revising the titles and paragraphs (b), (c), and (d) of the reporting instructions for Schedule P-1.1 and Schedule P-1.2 to read:

Schedule P-1.1—Statement of Operations—Group I Air Carriers

Schedule P-1.2—Statement of Operations—Group II and Group III Air Carriers

* * * * *

(b) Route air carriers shall file separate statements of operations for each separate operating entity and for the overall, or system, operations.

(c) Charter air carriers shall report data only in the column headed "Quarter" for the overall or system operations of the air carrier. Cumulative "12-Months-to-Date" and "Year-to-Date" information is not required from charter air carriers but it is acceptable if the report is used for submission to the Securities and Exchange Commission as explained in section 22(k).

(d) Data reported in the "12-Months-to-Date" column shall represent for each individual item the sum of amounts reported in the "Quarter" column for the current and next previous three quarters. Data in the "Year-to-Date" column need not be provided when this schedule is not used for submission to the SEC. But when the schedule is used for SEC purposes, data reported in the "Year-to-Date" column shall represent, for the first three quarters of the carrier's fiscal year or calendar year, amounts from the beginning of the carrier's fiscal or calendar year to the end of the quarter for which the schedule is being submitted. For the fourth quarter of the air carrier's fiscal or calendar year, the "Year-to-Date" column should be used for the comparative presentation of data for the prior year.

* * * * *

B. Revising paragraph (a) of the reporting instructions for Schedule P-1(a) to read:

Schedule P-1(a)—Interim Statement of Operations

(a) This schedule shall be filed by all air carriers.

* * * * *

C. Revising paragraph (p) of the reporting instructions for Schedule P-2 to read:

Schedule P-2—Notes to CAB Form 41 Report

* * * * *

(p) Charter air carriers shall note on this schedule the balances in subaccounts 87 and 88.2 of profit and loss account 8100 as reported on the P-1 schedules, together with dividends declared in the current period on the stocks of investor controlled companies.

* * * * *

D. Revising paragraph (a) of the reporting instructions for Schedule P-3.1 to read:

Schedule P-3.1—Transport Revenues

(a) This schedule shall be filed by all charter air carriers.

* * * * *

E. Revising paragraph (c-1) of the reporting instructions for Schedule P-5.1 and Schedule P-5.2 to read:

Schedules P-5.1 and P-5.2—Aircraft Operating Expenses

* * * * *

(c-1) Charter air carriers shall file this schedule for quarterly data only. The caption "Operation" at the head of each column is not applicable to charter carriers.

* * * * *

F. Revising paragraphs (a) and (c) of the reporting instructions for Schedule P-5(a) to read:

Schedule P-5(a)—Components of Flight Equipment Depreciation

(a) This schedule shall be filed by all subsidized air carriers.

* * * * *

(c) Air carriers shall file this schedule

* * *

* * * * *

G. Revising paragraphs (a), (b), and (d) of the reporting instructions for Schedule P-6 to read:

Schedule P-6—Maintenance, Passenger Service and General Services and Administration Expense Functions

(a) This schedule shall be filed by all carriers.

(b) Route air carriers conducting scheduled operations shall file this schedule for each operating entity.

* * * * *

(d) Charter air carriers shall file this schedule for quarterly data only. The caption "Operation" at the head of each column is not applicable to charter carriers.

* * * * *

H. Revising paragraphs (d) and (e) of the reporting instructions for Schedule P-7 to read:

Schedule P-7—Aircraft and Traffic Servicing, Promotion and Sales and General and Administrative Expense Functions

* * * * *

(d) Charter air carriers shall file this schedule for quarterly data only. The caption "Operation" at the head of each column is not applicable to supplemental air carriers.

(e) Group II air carriers and Group III charter carriers shall report the

indicated data for all except subfunction 6100 Aircraft Servicing.

* * * * *

Schedule P-9.2 [Amended]

I. Revoking the title and reporting instructions for Schedule P-9.2 *Distribution of Ground Servicing Expenses by Geographic Location—Group II and Group III Route Air Carriers*

Section 25 [Amended]

13. Section 25—*Traffic and Capacity Elements* would be amended by:

A. Revising paragraphs (a) and (n) of the reporting instructions for Schedule T-3.1 to read:

Schedule T-3.1—Statement of Traffic and Capacity Statistics

(a) This schedule shall be filed by all charter carriers.

* * * * *

(n) Each air carrier shall * * *

* * * * *

B. Revising paragraph (a) of the reporting instructions for Schedule T-6 to read:

Schedule T-6—Report of Civil Aircraft Charters

(a) This schedule shall be filed by all Group III air carriers and Group I and Group II charter air carriers.

* * * * *

C. Inserting reporting instructions for a new Schedule T-9 following the reporting instructions for Schedule T-8 to read:

Schedule T-9—Nonstop Market Report

(a) This schedule shall be filed monthly by all Group I and Group II route air carriers and may be used by new entrants categorized as Group III route air carriers, with the approval of the Director, Office of Economic Analysis, until such time as the new entrants develop the capability to comply with Automatic Data Processing reporting requirements imposed on incumbent carriers of comparable size.

(b) Each schedule contains a five block carrier code and a four block date code. The five block carrier code is assigned to individual carriers by the Office of Comptroller. The four block date code will be used to record the year and the month. The first two blocks of the date code shall be used to record the year and the second two blocks shall be used to record the month in the calendar year. Months will be numbered consecutively beginning with 01 for January and continuing through 12 for December.

(c) Individual flight stages shall be reported on separate lines. Where different aircraft types are used, separate lines will be used for those flight stages.

(d) In column 1, carriers shall report the line number as a point of reference for the data reported.

(e) In columns 2 and 3, respectively, carriers shall report the take off and landing for each flight stage.

(f) In column 4, carriers shall disclose the aircraft type used in accordance with standard abbreviations used for specific aircraft types.

(g) In column 5, "Interairport Distance," carriers shall report the great circle distance, in statute miles between airports served by each flight stage, as published in the Civil Aeronautics Board's Official Route and Mileage Manual."

(h) In column 6, "Revenue Aircraft Departures Performed," carriers shall report the number of revenue aircraft departures (take offs) performed (scheduled and extra sections).

(i) In columns 7 and 8, respectively, carriers shall report the actual number of First Class and Coach "Seats Available" on the particular aircraft with which each flight stage is performed.

(j) In column 9, "Tons Available," carriers shall report in pounds the payload capacity actually provided by the particular aircraft with which each flight stage is performed.

(k) In columns 10 and 11, respectively, carriers shall report the number of First Class and Coach "Revenue Passengers Transported" on each flight stage.

(l) In column 12, "Revenue Tons Transported," carriers shall report the number of pounds of revenue traffic carried on each flight stage.

(m) In columns 13 and 14, respectively, carriers shall report the number of First Class and Coach "Revenue Passengers Enplaned" at the take off point.

(n) In column 15, "Revenue Cargo Tons Enplaned," carriers shall report the total of revenue cargo pounds boarding an aircraft.

Section 26 [Amended]

14. Amend Section 26, *General Corporate Elements by:*

Schedule G-42 [Revoked]

A. Revoking the title and reporting instructions for Schedule G-42 *Security Interests of All Officers and Directors and Compensation Paid to Principal Officers and Directors.*

Schedule G-43 [Revoked]

B. Revoking the title and reporting instructions for Schedule G-43 *Compensation and Expenses of Persons and Firms (Other than Directors, Officers and Employees) Earning $20,000 or More During the Calendar Year.*

Schedule G-44 [Revoked]

C. Revoking the title and reporting instruction for Schedule G-44 *Corporate and Securities Data.*

CAB Form 41 [Added]

15. Add new CAB Form 41 Schedule T-9 as shown in Exhibit A (filed as part of the original document).

(Sections 204 and 407 of the Federal Aviation Act, as amended, 72 Stat. 743, 766; 49 U.S.C. 1324 and 1377.)

By the Civil Aeronautics Board.

Phyllis T. Kaylor,

Secretary.

[FR Doc. 79-39626 Filed 12-28-79; 8:45 am]

BILLING CODE 6320-01-M

CONSUMER PRODUCT SAFETY COMMISSION

16 CFR Part 1015

Procedures for Disclosure or Production of Information Under the Freedom of Information Act; Proposed Revisions for Briefing Packages and Draft Documents

AGENCY: Consumer Product Safety Commission.

ACTION: Proposed Revisions to Freedom of Information Act regulation.

SUMMARY: In this notice the Consumer Product Safety Commission proposes to revise its Freedom of Information Act regulation to clarify the availability of draft Commission staff documents and Commission staff briefing packages. The present regulation appears to treat these documents differently from other Commission documents in that it fails to make clear that these documents will not be made available if disclosure is barred by statute or if the documents are exempt from mandatory disclosure and disclosure is contrary to the public interest. Under the proposed revision, draft staff documents that are agency records and staff briefing packages will be available upon request in the same manner as other Commission records. Additionally, the proposed revision provides that briefing packages or portions of briefing packages that would be released upon request under the FOIA and the Commission regulation will be made available in the Commission's public reference facility after they are transmitted to the Commissioners by the Office of the Secretary.

DATES: Written comments on the proposed revisions must be received no later than January 30, 1980. Those comments received after this date will be considered to the extent practicable. The Commission has determined that only a thirty day comment period is warranted because of the narrow focus of the proposed revisions to existing Commission policies and procedures.

ADDRESSES: Send written comments to the Office of the Secretary, Consumer Product Safety Commission, Washington, D.C. 20207. Received comments may be examined and copies obtained from the Office of the Secretary, 1111 18th Street NW., Washington, D.C. during regular business hours.

FOR FURTHER INFORMATION CONTACT: Alan H. Schoem, Office of the General Counsel, Consumer Product Safety Commission, Washington, D.C. 20207, telephone (202) 634-7770.

SUPPLEMENTARY INFORMATION: On February 22, 1977, the Commission published in the Federal Register its final Freedom of Information Act (FOIA) Regulation (42 FR 10490), codified at 16 CFR Part 1015. The regulation, among other things, specifically addresses the public availability of draft staff documents and staff briefing packages. 16 CFR 1015.15 (b) and (c). For the reasons discussed below, the Commission proposes to revise these sections of its FOIA regulation to clarify that such documents will be available upon request in the same manner as other Commission documents. Additionally, the proposed revision will clarify the availability of briefing packages in the Commission's public reference facility after transmittal to the Commissioners by the Office of the Secretary.

A. Draft Documents

Section 1015.15(b) of the Commission's FOIA regulation provides that draft Commission staff documents are releasable to the public after the first level of required supervisory review or approval or, where no review is required, at the time they transmitted to the people for whom they are intended. This provision reflects an attempt to articulate the Commission's policy generally to make such draft documents available to the public.

However, notwithstanding § 1015.17, which provides a procedure for withholding draft documents or other Commission records that are exempt from mandatory disclosure, the language of the regulation has been misinterpreted by the public and the staff to mean that virtually all draft documents will be released. This has been the case even where the draft document may be exempt from disclosure and even where the public interest would be served if the draft were not, at that time, disclosed. This misinterpretation obscures the Commission's basic policy under the FOIA as expressed in present § 1015.15(b):

(b) No identifiable record requested in accordance with the procedures contained in this part shall be withheld from disclosure unless it falls within one of the classes of records exempt under 5 U.S.C. 552(b). To the extent permitted by law, the Commission willl make available records authorized to be withheld under 5 U.S.C. 552(b) unless the Commission determines that disclosure is contrary to the public interest. * * *

The proposed revision to section 1015.15(b) and (c) clarifies that the Commission will consider draft documents no differently from other documents requested under the FOIA. Although draft documents frequently may be exempt from mandatory disclosure under exemption 5 of the FOIA, 5 U.S.C. 552(b)(5), as predecisional documents that contain advice, recommendations and opinions that are part of the deliberative or policy-making process, the FOIA does not address draft documents, per se. Thus, under the proposal, the decision whether to release a particular document will be made on a case-by-case basis applying the FOIA and the Commission's FOIA regulation. Inasmuch as this case-by-case analysis includes consideration of whether the draft document is an agency record subject to the FOIA, it is also proposed that § 1015.17 be amended by deleting its references to "a record *or draft document.*"

B. Briefing Packages

The Commission's staff prepares for the Commission "briefing packages" which contain information, analyses and recommendations which the Commissioners use as part of their decision-making process. The Commission's FOIA regulation currently provides at 16 CFR 1015.15(c) that "briefing packages which have been completed by the staff but not approved by the Commission" will be released upon request.

As with draft documents, there is no basis upon which to accord briefing packages treatment separate from other records requested under the FOIA. In addition, the separate treatment provided by the present regulation has been unsatisfactory in several regards. First, it fails to reflect the Commission practice to withhold from release briefing packages or portions thereof, that may contain trade secrets or other confidential business information that the Commission may not disclose under section 6(a)(2) of the CPSA, 15 U.S.C. 2055(a)(2). Additionally, portions of briefing packages involving personnel matters, may, if disclosed, result in an unwarranted invasion of privacy. Further, the regulation fails to reflect the Commission practice to withhold from release briefing packages or portions thereof that are exempt from mandatory disclosure where disclosure is contrary to the public interest.

For these reasons, the Commission proposes to revise § 1015.15(c) to clarify that briefing packages are, for purposes of the FOIA, subject to the same standards as other Commission records. The Commission expects however, that few requests for such documents will be made under the FOIA because, under the proposed revision to § 1015.15(c) discussed below, briefing packages generally will be available, without the need for a request, after they are transmitted to the Commissioners by the Office of the Secretary.

Specifically, section 1015.15(c) provides that briefing packages "will be publicly availabe when forwarded . . . to the Commissioners." This provision reflects a Commission policy decision, above and beyond the FOIA, generally to provide the public access, without the need for an FOIA request, to briefing packages transmitted to the Commissioners. The Policy provides ready public access to materials being considered by the Commissioners as they make regulatory decisions.

However, revision of the language of § 1015.15(c) is required for several reasons. First, as discussed above, the Commission does not and cannot make all briefing packages available to the public. The office of General Counsel reviews each briefing package before transmittal to the Commissioners to help the Secretary assess, among other things, (i) whether the Commission is barred by statute from disclosing the full contents of the briefing package, (ii) whether portions of briefing packages, if requested under the FOIA, would be exempt from mandatory disclosure and (iii) whether disclosure would be contrary to the public interest. The proposed revision makes clear that these determinations guide the Secretary's decision whether particular briefing packages or portions of briefing packages are to be placed in the Commission's public reference facility.

Additionally, under present § 1015.15(c) briefing packages are made available to the public in the Commission's public reference facility at the same time they are transmitted to the Commissioners. In many cases under this practice, the public has had access to materials prepared for Commissioners before individual Commissioners have received the package. Accordingly, the proposed revision provides that briefing packages, or the portions thereof, determined by the Secretary, with the advice of the Office of the General Counsel, to be available to the public, will be placed in the Commission's public reading room promptly after transmittal to the Commissioners by the Office of the Secretary.

The Commission believes the proposed revisions to § 1015.15(c) address the identified problems and yet ensure public access to Commission briefing packages to the fullest extent practicable.

Accordingly, it is proposed to amend § 1015.15 by revising paragraphs (b) and (c) to read as follows:

§ 1015.15 Purpose and scope.

* * * * *

(b) No identifiable record requested in accordance with the procedures contained in this part shall be withheld from disclosure unless it falls within one of the classes of records exempt under 5 U.S.C. 552(b). The Commission will make available, to the extent permitted by law, records authorized to be withheld under 5 U.S.C. 552(b) unless the Commission determines that disclosure is contrary to the public interest. In this regard the Commission will not ordinarily release documents that provide legal advice to the Commission concerning pending or prospective litigaton where the release of such documents would significantly interfere with the Commission's regulatory or enforcement proceedings.

(c) Draft documents that are agency records are subject to release upon request in accordance with this regulation. However, in order to avoid any misunderstanding of the preliminary nature of a draft document, each draft document released will be marked to indicate its tentative nature. Similarly, staff briefing packages, which have been completed but not yet transmitted to the Commission by the Office of the Secretary are subject to release upon request in accordance with this regulation. Each briefing package or portion thereof released will be marked to indicate that it has not been transmitted to or acted upon by the Commission. In addition, briefing packages, or portions thereof, which the Secretary upon the advice of the Office of the General Counsel has determined would be released upon request in accordance with this regulation, will be publicly available in the public reference facility established under § 1015.2 promptly after the briefing package has been transmitted to the Commissioners by the Office of the Secretary. Such packages will be marked to indicate that they have not been acted upon by the Commission.

* * * * *

§ 1015.17 [Amended]

It is proposed to amend § 1015.17 by deleting the phrase "or draft document" in § 1015.17, line 4; § 1015.17(a), line 4; and § 1015.17(b), lines 3–4.

(Consumer Product Safety Act, 15 U.S.C. 2051; the Federal Hazardous Substances Act, 15 U.S.C. 2161; the Poison Prevention Packaging Act of 1970, 15 U.S.C. 1471; the Refrigerator Safety Act, U.S.C. 1211; the Flammable Fabrics Act 15 U.S.C. 1191; and the Freedom of Information Act, 5 U.S.C. 552.)

Dated: December 26, 1979.

Sadye E. Dunn,

Secretary, Consumer Product Safety Commission.

[FR Doc. 79-39821 Filed 12-28-79; 8:45 am]

BILLING CODE 6355-01-M

DEPARTMENT OF ENERGY

Federal Energy Regulatory Commission

18 CFR Part 282

[Docket No. RM 80-10]

Rule Required Under Section 202 of the Natural Gas Policy Act of 1978; Public Hearings

December 27, 1979.

AGENCY: Federal Energy Regulatory Commission.

ACTION: Notice of Public Hearings.

SUMMARY: On November 15, 1979, the Federal Energy Regulatory Commission (Commission) issued a Notice of Proposed Rulemaking to implement section 202 of the Natural Gas Policy Act of 1978 (NGPA) (44 FR 67170, November 23, 1979). Under the proposal, the incremental pricing program would be expanded on November 1, 1980, to include all industrial users of natural gas that are not granted an exemption by statute. In that notice the Commission stated that it intended to hold public hearings on the proposed rule. Notice is hereby given that five public hearings will be held with respect to this proposal. The exact dates and locations of the hearings are set forth below.

DATES: Requests to participate by January 11, 1980. Hearing dates: January 18, 1980, in San Francisco, California; January 21, 1980, in Salt Lake City, Utah; January 23, 1980, in Chicago, Illinois; January 25, 1980, in Louisville, Kentucky; and January 29, 1980, in Washington, DC.

ADDRESSES: Requests to participate: Office of the Secretary, Federal Energy Regulatory Commission, 825 North Capitol Street, NE., Washington, D.C. 20426 [Reference Docket No. RM80-10]. Hearing locations:

Federal Office Building, Room 503, 555 Battery Street, San Francisco, California 94111 (January 18, 1980, beginning at 9:00 a.m.).

City Commission Chambers, Third Floor, City and County Building, South State Street—Between 4th and 5th Streets, Salt Lake City, Utah 84111 (January 21, 1980, beginning at 9:00 a.m.).

219 South Dearborn Street, Dirksen Federal Office Building, Chicago, Illinois 60604 (Room number to be posted in lobby) (January 23, 1980, beginning at 9:00 a.m.).

Commonwealth Convention Center, Room 211, 221 River City Mall, Louisville, Kentucky 40202 (Next to Hyatt Regency Louisville) (January 25, 1980, beginning at 9:00 a.m.).

Federal Energy Regulatory Commission, 825 North Capitol Street, NE., Washington, D.C. 20426 (Room number to be posted on the second floor the morning of the hearing) (January 29, 1980, beginning at 9:30 a.m.).

FOR FURTHER INFORMATION CONTACT: Nancy E. Williams, Deputy Assistant General Counsel for Regulatory Development, Federal Energy Regulatory Commission, 825 North Capitol Street, NE., Washington, D.C. 20426 (202) 357-8033.

SUPPLEMENTARY INFORMATION: Requests to participate in a hearing should be directed to the Secretary, Federal Energy Regulatory Commission, 825 North Capitol Street, NE., Washington, D.C. 20426, no later than January 11, 1980, and should indicate the hearing for which the request is made. Requests should reference Docket No. RM80-10, and should indicate the amount of time required for the oral presentation, and the telephone number at which the person making the presentation can be reached. Persons participating in a public hearing should, if possible, bring 50 copies of their testimony to the hearing. A list of the participants in a hearing will be available in the Commission's Office of Public Information three days before the hearing and will be available at the site of the hearing on the morning it is convened.

The hearings will not be of a judicial or evidentiary type. There will be no

cross-examination of persons presenting statements. However, the panel may question such persons and any interested person may submit questions to the presiding officer to be asked of persons making statements. The presiding officer will determine whether the question is relevant and whether the time limitations permit it be presented. Any further procedural rules will be announced by the presiding officer at each hearing. Transcripts of the hearings will be available in the public file for this proceeding, Docket No. RM80-10, through the Commission's Office of Public Information.

The hearing to be held in Chicago, Illinois, on January 23, 1980, and the hearing scheduled for January 29, 1980, in Washington, D.C., will be continued on the respective following days, if necessary.

Kenneth F. Plumb,

Secretary.

[FR Doc. 79-39916 Filed 12-28-79; 8:45 am]

BILLING CODE 6450-01-M

ENVIRONMENTAL PROTECTION AGENCY

40 CFR Part 51

[FRL No. 1381-5; Docket No. A-79-40]

Protection of Visibility

AGENCY: U.S. Environmental Protection Agency.

ACTION: Proposed Rule; Notice of Public Workshops.

SUMMARY: The Environmental Protection Agency (EPA) published in the Federal Register on November 30, 1979 (44 FR 69116) an Advance Notice of Proposed Rulemaking (ANRP) for the protection of visibility. The Advance Notice notified interested persons of the technical and policy issues associated with the development of visibility protection regulations, and also outlined some tentative positions developed by EPA staff. The ANPR established a written comment period which closes on December 31, 1979, and said that the Agency would hold two public workshops to enhance public participation.

Today, EPA is announcing three public workshops. The workshops will be conducted informally, the purposes of which are to help inform and educate the public on the pertinent visibility regulation issues set out in the ANPR and to solicit comments and suggestions on all aspects of the visibility regulation program. Minutes of the meetings, rather than verbatim transcripts will be made and sent to the formal visibility regulation docket identified in the ANPR. As noted in the ANPR, written comments should be sent to this docket during the comment period.

The three public workshops will be held in Denver, Colorado; Seattle, Washington, and Salem, Oregon.

DATES: Workshops will be held as follows:

Tuesday, January 22, 1980, Seattle, Washington,
Wednesday, January 23, 1980, Salem, Oregon,
Friday, January 25, 1980, Denver, Colorado.

ADDRESSES: Workshops will be held at the following locations:

Seattle, Washington, Room 12A, Park Place Building, 1200 6th Avenue,
Salem, Oregon, Hearing Room A, State Capitol Building,
Denver, Colorado, Mountain Bell Building Association, 1005 17th Street.

FOR FURTHER INFORMATION CONTACT:
David Bray, Air & Hazardous Materials Division, U.S. Environmental Protection Agency, Region X, 1200 6th Avenue, Seattle, Washington, 98101, (206) 442-1125,
or
Terry L. Thoem, Director, Energy Policy Coordination Office, U.S. Environmental Protection Agency, Region VII, 1860 Lincoln Street, Denver, CO 80295, (303) 837-5914.

An agenda for the public meetings will be available by January 8, 1980. Additionally, EPA notes that it plans to hold legislative type public hearings after the visibility regulations are proposed.

Dated: December 21, 1979.

Edward F. Tuerk,

Acting Assistant Administrator for Air, Noise and Radiation.

[FR Doc. 79-39820 Filed 12-28-79; 8:45 am]

BILLING CODE 6560-01-M

DEPARTMENT OF TRANSPORTATION

National Highway Traffic Safety Administration

49 CFR Part 533

[Docket No. FE 78-01; Notice 1]

Light Truck Average Fuel Economy Standards for Model Years 1982-85; Notice of Proposed Rulemaking

AGENCY: National Highway Traffic Safety Administration, (NHTSA) Department of Transportation.

ACTION: Notice of proposed rulemaking.

SUMMARY: This notice proposes establishment of average fuel economy standards for light trucks manufactured in model years 1982-85. The issuance of these standards is required by the Motor Vehicle Information and Cost Savings Act, as amended (the Act). The standards are intended to result in total accumulated savings by 1990 of approximately 15 to 23 billion gallons of gasoline (or in barrels, 357 to 548 million barrels), compared to the gasoline that would be consumed if light truck fuel economy remained at the level of the 1981 standards. This notice also announces a reduction of the 1981 light truck standards under the terms of the March 1978 and June 1979 final rules establishing those standards. Those rules provided that the 1981 standards would be reduced by a specified amount if the motor vehicle and petroleum industries did not meet the conditions for approving the use of certain advanced engine lubricants in fuel economy testing. The EPA has informed this agency that the conditions will not be met in time to permit approval by January 1, 1980, the date specified in the rules establishing the 1981 standards.

DATES: Comments on the proposed 1982 standards must be received on or before January 30, 1980 and those on the proposed 1983-85 standards on or before March 31, 1980.

ADDRESSES: Comments must be submitted (preferably in ten copies) in writing to Docket Section, National Highway Traffic Safety Administration, Room 5108, 400 Seventh Street, S.W., Washington, D.C. 20590. (Docket hours: 8 a.m. to 4 p.m.).

Submissions containing information for which confidential treatment is requested should be submitted (preferably in three copies) to Chief Counsel, National Highway Traffic Safety Administration, Room 5219, 400 Seventh Street, S.W., Washington, D.C.

FOR FURTHER INFORMATION CONTACT: Mr. Francis J. Turpin, Office of Automotive Fuel Economy Standards (NRM-21), National Highway Traffic Safety Administration, 400 Seventh Street, S.W., Washington, D.C. 20590 (202-472-6902).

SUPPLEMENTARY INFORMATION: Section 502(b) of the Act requires the Secretary of Transportation to establish average fuel economy standards for light trucks manufactured in each model year beginning with 1979. Each standard must be prescribed at least 18 months prior to the start of the model year to which it applies and must be set at the "maximum feasible average fuel economy level," considering technological feasibility, economic practicability, the need of the nation to conserve energy, and the effects of other Federal motor vehicle standards on fuel economy.

On March 14, 1977, standards for light trucks manufactured in model year 1979 were established in 42 FR 13807.

Standards for the 1980 and 1981 model years were established on March 23, 1978, in 43 FR 11995. The 1981 standard for two-wheel drive light trucks was reduced from 18.0 miles per gallon (mpg) to 17.2 mpg in response to a petition from Chrysler Corporation, on June 25, 1979, in 44 FR 36975. A further reduction in the 1981 standards of 0.5 mpg is announced in this notice. See Section II, *infra*. This notice proposes that standards be established for model years 1982–85. Establishing multiple year standards responds to past industry requests for longer term planning guidance and leadtimes.

The agency has obtained information from a variety of sources to form the basis for this proposal. Among these sources are the agency's own research activities, analyses, and technological assessments, and information obtained from the manufacturers in a July 1978 questionnarie and a July 1979, special order.

The 1982–85 standards would be applicable to light trucks with gross vehicle weight ratings (GVWR's) up to 8500 pounds, curb weights less than 6000 pounds, and frontal areas less than 45 square feet. The term GVWR means the maximum weight rating of the vehicle including passengers and cargo. Thus, trucks subject to the standards would include most pickup trucks, vans, and utility vehicles such as Jeeps. Most of these vehicles fall within the "personal usage" or mixed personal/commerical usage categories. In recent years, light trucks under 8500 pounds GVWR have accounted for about 25 to 30 percent of the total car and light truck sales.

In previous light truck rulemaking proceedings, the main thrust of the agency's analysis has been to project the use of technological improvements which increase the efficiency of existing light truck models. These improvements typically involve add-on technology and include engine efficiency improvements and use of more efficient transmissions and accessories. For the 1982–85 rulemaking, the agency is projecting the continuation of these types of improvements. Further improvements in average fuel economy for model years 1982–85 are likely to come from the introduction of additional models, such as compact pickup trucks, and the introduction of new, smaller displacement engines. Similar fundamental changes are already being made to cars.

A major issue in this proceeding is likely to be the extent to which the manufacture can produce and successfuly market the new, smaller truck models, as opposed to the current, larger models. Sales of the larger models have slumped this year. The agency is projecting in this notice that large numbers of these new models can be sold in the 1982–85 time period. By comparison, a much greater portion of the passenger car fleet will have been redesignated by the early 1980's than the agency is projecting for light trucks by 1985. In examining potential light truck fuel economy regulations for 1982–85, the agency is predicating its analysis on the proposition that the decline in 1979 of the sales of truck with poor fuel enconomy is a fair indicator of the future. NHTSA does not view the significant departure in 1979 from prior year market behavior as an aberration. Instead, the agency views it as a rational long term response to increasing fuel prices and declining availability of fuel. The fact that the manufactures are already planning, even prior to the issuance of any fuel economy standards for 1982–85, to introduce such models is evidence that they generally concur in this judgment.

Comment is invited on all issues implicit in this proceeding, but comment is specifically invited on the major issues set forth below.

These issues are discussed in general terms in this notice.

1. The benefits to the nation and consumers of more fuel efficient trucks and of a more diversified array of truck sizes and capabilities.

2. The marketability of new, compact truck models compared to that of current larger models, and the fuel economy levels achievable with those models.

3. The extent to which average engine displacement and/or total drive ratios can be reduced in the 1982–85 consistent with light truck functional and marketing considerations.

4. The capability of the manufactures (in particular Chrysler Corporation) to finance the required fuel economy improvements.

5. The effects of more stringent emission standards and related requirements on fuel economy.

6. Whether special treatment should continue to be accorded International Harvester Company or other companies, through a separate, less stringent fuel economy standard.

7. The agency's current policy of not considering the fuel economy benefits of diesel engines.

8. How issues such as the uncertainty about the new light truck market in the early and mid-1980's and such as the recession should be taken into consideration in assessing the economic practicability of future standards and in setting those standards.

9. The extent to which the schedule of standards for 1982–85 can be set so as to provide the manufacturers with flexibility to deal with market uncertainties in reaching the 1985 standard. (The existing statutory provision for a one year carry back and forward of credits already affords the manufacturers some flexibility and the Department's legislative proposal to extend that period to three years would provide even greater flexibility.)

10. The extent to which manufacturers can or should be permitted to include foreign-produced light trucks in their domestic fleets for standards compliance purposes.

11. The prospects for future gasoline price increases and supply shortages, and the impact of those events on the need for higher fuel economy for light trucks.

I. Classification

Section 502(b) of the Act authorizes the agency to set separate fuel economy standards for different classes of light trucks. The agency has used this authority in each light truck standard-setting proceeding to date to promote maximum energy conservation and to minimize the burdens on manufacturers, given differences in the truck fleets and fuel economy improvement capabilities of the companies. For example, a separate class can be established for light truck types which are inherently less fuel efficient, permitting higher standards to be set for other types. For model years 1980–81, five different truck classes were established. Separate classes and fuel economy standards were established for two- and four-wheel drive light trucks, and within those classes, separate subclasses were established for captive imports and domestically manufactured light trucks. The separate two wheel drive (4x2) and four-wheel drive (4x4) standards were established to account for American Motors' fleet, which is composed almost exclusively of 4x4's. Those trucks generally have lower fuel economy than 4x2 trucks (due to the need to meet off-road requirements) and caused AM to have a lower projected average fuel economy than the other manufacturers.

The classification based on import or domestic status is intended to encourage the domestic production of the fuel efficient, compact trucks which are currently imported. (See discussion at 42 FR 63187 and 43 FR 11998–9.) Thus, this classification is anticipated to result in increased employment in the domestic auto industry consistent with section 502(b) of the Act. In that section, Congress requires separate compliance with fuel economy standards for

domestic and imported passenger automobiles. Chrysler Corporation has requested that manufacturers should be permitted to include up to 80,000 captive import light trucks in their domestic fleets for standards compliance purposes. Comment is invited on the desirability of and legal authority for granting this request for Chrysler alone or for all companies. If Chrysler's request were granted, the agency would include both captive import and domestic light trucks in its evaluation of Chrysler's capability to improve fuel economy. Thus, the agency's assessment of Chrysler's fuel economy capability for these years would be higher than if only the less fuel efficient domestic trucks were included. The same reasoning would apply to other manufacturers with captive imports.

A separate class and standard was established for "limited product line light trucks," those manufactured by companies whose light truck fleet is powered exclusively by basic engines which are not also used in passenger automobiles. The "limited product line" standard was established for two years' duration. It was designed to permit manufacturers which had no previous experience in complying with the more stringent emission standards applicable to passenger automobiles to develop technology to meet emission standards without major adverse fuel economy impacts. Light trucks in the 6001–8500 pound range were first subject to "light duty truck" emission standards in MY 1979. At the same time, the stringency of these standards was raised, to levels more comparable to passenger car standards. To date, the limited product line class includes International Harvester Company only.

The separate class for limited product line light trucks is due to lapse with the 1982 model year. International Harvester has recently submitted average fuel economy projections for model years 1981 through 1985 increasing from 16.0 mpg to 17.7 mpg, generally in the range of the agency "base case" fuel economy projections 4x4 light trucks in those model years. See discussion of the base case in the next section of this notice. However, IH's projections of future fuel economy levels would be approximately one mpg less in each year if diesel engines are not considered. The agency has not included the fuel economy benefits of using diesel engines when projecting manufacturers' capabilities to meet future standards, pending resolution of diesel-related health effect questions by EPA. IH has requested that the policy of having a separate fuel economy class for its light trucks be extended through 1985, and that a lower standard be established for IH than the generally applicable 4x4 standard. IH asked also that the separate class be redefined in terms of its market position. This request for a separate class and standard is based upon IH's view that it will be unable to keep pace with the average fuel economy levels of the larger manufacturers and upon various marketing and technological uncertainties facing that company.

The agency desires comment on the desirability of and legal authority for granting IH's request. If the agency concludes that IH cannot meet the same levels of fuel economy as the "full line" manufacturers, the agency would be favorably disposed to continuing the separate treatment of IH through the use of the "classification" authority of section 502(b) of the Act, instead of having IH's limited capability pull down the level of a generally applicable standard. Such a separate class might be defined in terms of trucks produced by manufacturers of less than a specified number of light trucks annually.

Comment is sought also on the desirability of and legal authority for including other companies in a separate class if that company is unable to achieve the same average fuel economy as the larger manufacturers. For example, based on the company's own estimates, Chrysler Corporation would achieve substantially lower fuel economy levels than its larger competitors in the 1982–85 time frame, apparently due to that company's current financial difficulties. If that company were permitted to meet a separate, lower fuel economy standard, a higher standard could be set for the other companies. This approach could produce greater energy savings than setting a single standard for all companies at a level which Chrysler can meet.

II. Methodology

The basic methodology used to establish maximum feasible average fuel economy levels in this proceeding is generally the same as in previous light truck rulemaking. The approach is described in detail in the agency's rulemaking support paper for this proceeding, copies of which are available from the individual listed as the "information contact" at the beginning of this notice. Generally, the methodology begins with the selection of a fuel economy baseline, i.e., the determination of the average fuel economy of the regulated fleet of light trucks in the base year and fleet. Then, adjustments are made to that number for each item of fuel economy-improving technology or method that can be applied in years for which standards are being set, based on the magnitude of that benefit per vehicle and the portion of the fleet to which the improvement can be applied. Finally, an adjustment is made to reflect the impact of changes in other Federal motor vehicle standards, such as increased weight due to changes in safety standards. This process produces a maximum fuel economy value for each manufacturer in each model year. The standard is established at the maximum feasible level. In establishing those levels, the agency considers these individual manufacturer capabilities, the need of the nation to conserve energy, and other factors set forth in the statute and its legislative history (see discussion in section VII of this notice). In view of the uncertainties involved in fuel economy rulemaking, this process will be a balancing one in which the risks of setting too lenient standards will be weighed against the risks of setting too stringent ones. The result will be final standards which make allowances for these uncertainties.

One variation on the methodology used in the past by the agency relates to the way in which the introduction of new models is treated. Instead of measuring the fuel economy improvement resulting from the introduction of a new model by determining the effect of the new model on various fleet attributes (average weight, engine displacement, technology usage, etc.), a single fuel economy value is assigned to the new model. This single value includes the effects of all the various fuel economy improvements which could be incorporated in the new truck model. This new approach for determining the effect of new model introduction is adopted for this proposal to simplify accounting for technological improvements on existing vehicles and those improvements which would be included in a complete redesign of a vehicle. The fuel economy estimates for new models are described in section VI and Appendix A of the agency's rulemaking support paper. However, for the final rule the agency will separately specify the various improvements now reflected in a single fuel economy value for each of the new models.

The baseline used in this notice is the 1981 light truck standards. Those standards were established at two alternate levels. The higher one was to be applicable if the Environmental Protection Agency approved, by January 1, 1980, the use of fuel economy-improving engine lubricants in the fuel

economy testing for the 1981 model year. The other level, which is 0.5 mpg lower than the first, was to be automatically applicable if the approval was not given. On October 26, 1979, the EPA notified NHTSA that this approval would not be granted by January 1, 1980. See EPA letter in NHTSA Docket No. FE-77-05. Therefore, the agency is announcing in this notice that the lower level of the 1981 light truck standards will be the applicable one. A technical amendment will be issued shortly to reflect these events. Thus, the 1981 standards are 16.7 mpg for 4 x 2 domestic and import light trucks, 15.0 mpg for 4 x 4 domestic and import light trucks, and 14.5 mpg for limited product line light trucks.

The agency continues to estimate that a 2.0 percent improvement in fuel economy can be gained from the use of improved engine lubricants. Although the proposed standards and ranges in this notice do not reflect this improvement, the agency plans to include this improvement in the final rule for model years 1983–85 unless sufficient data is forthcoming to show that a 2.0 percent fuel economy improvement on the EA test cycle is not a realistic one.

The agency is using its analysis from the previous proceeding in contructing the baseline, and determining what levels of technological implementation are necessary to meet the 1981 standards and what technological improvements remain to be applied in 1982–85. Comment is requested on the appropriateness of adjusting the agency's analysis to account for 1980 certification data and other more recent information.

III. Fuel Economy Projections

The agency is proposing specific standards for the 1982 model year and ranges of possible final standards for 1983–85. The reason for this approach is the limited leadtime remaining until the 1982 model year, and the greater uncertainty (particularly marketing uncertainty) involved in making projections further into the future for the 1983–85 model years. The ranges for the 1983–85 model years were derived from a "base case" analysis and three additional cases which demonstrate the potential fuel economy improvements from certain additional methods of improving fuel economy. In addition, the lower end of the ranges reflect a 5 percent penalty due to emission standards and related procedural changes, which the manufacturers have claimed to cause a loss in fuel economy. As discussed below, the agency is currently of the view that this penalty need not exist, but invites comment on the question. The high end of the range is based on an average of the agency's estimates for all the companies in cases 2 and 4 (the highest fuel economy cases). For the lower end of the ranges and for the 1982 standards, the value selected is that projected for the "least capable" manufacturer. This issue is discussed later in the notice. The fuel economy standards and ranges proposed in this notice are as follows:

Model years	4 x 2 (mpg)	4 x 2 (mpg)
1982	17.4	15.6
1983	18.0–20.0	15.6–18.0
1984	18.8–21.4	16.1–19.3
1985	19.7–22.4	16.2–19.9

These values were derived by first examining the present truck fleet and applying the various technological improvements that are, by now, well-known to the industry. This anaylsis assumed the application of improved lubricants, tires, transmission, and electronic engine controls throughout the entire fleet over the period under consideration. To this improved fleet, the agency then added the introduction of new, fuel efficient vehicles.

In defining a base case, the agency generally assumed the introduction of now models on the same schedule that the industry is now considering. Moreover, at least for 1982 and 1983, NHTSA assumed that the market penetration for the new models will not differ substantially from the industry's estimates. For 1984 and 1985, NHTSA has assumed that the market will accept a larger proportion of new models than most of the manufacturers are currently forecasting.

In order to assess what the maximum feasible fuel economy level for the 1983–85 light truck fleet might be, the agency then modified the base case through the application of additional strategies designed to improve fuel economy.

The first modification accelerated the introduction of new models and substantially increased their market share. The second modification was to reduce payload by substituting lower GVWR vehicles for those in the base case fleet. This analysis resulted in a relatively modest improvement in fuel economy. The last modification was to lower the average engine displacement of the fleet while holding payload constant. In most instances, it was this modification that generated the higher fuel economy levels suggested for consideration. Resulting engine sizes were equal to that of those vehicles with the smallest displacement engines in the current fleet, generally 225 or 250 CID six cylinder engines. This step produced fuel economy increases that were comparable to those generated by the accelerated new model modification.

The final standards will not necessarily be derived from a single case. Instead, they will be derived from an amalgamation of the fuel economy improvement measures discussed in the cases (and diesels if the related health effects question can be adequately resolved). This process will be based on the agency's consideration of all available information, including the written comments received on this notice. The level of the final standards will most likely be within the ranges set forth above.

In terms of overall stringency, the standards and ranges described above would produce increases in average fuel economy of from 4 to 30 percent compared to the levels of the 1981 standards. Compared to the fuel economy improvements which the domestic manufacturers indicate that they at least tentatively plan to meet, the proposed 1982 standards are about 1 to 1½ mpg below the planned levels, with the exception of Chrysler, which expects to fall below the proposed levels. For the later years, the manufacturers' planned fuel economy levels fall within the agency's ranges, again but for Chrysler, whose estimated 4x2 fuel economy is below the low end of the agency's range. However, in comparing the levels of fuel economy achievable under the manufacturers' plans with those achievable under the base case and the other cases, one must remember that the manufacturers' plans are tentative in some respects and may include some means for improving fuel economy that will not be fully successful in achieving goals set for them.

Chrysler's product plan is based on very little activity to improve light truck fuel economy in model years 1981 and 1982, and makes the assumption that beginning in 1981, notwithstanding gas price increases and uncertainty as to fuel availability, consumers will demand less efficient, heavier trucks with larger engines. After Chrysler's October 29 written submissions to the agency which sets forth these projections, a representative of Chrysler informally provided a higher 1982 4x2 fuel economy estimate. The recent higher estimate still falls below the agency's 1982 proposed standard.

a. *The Base Case.* The base case fuel economy projections include the benefits of applying most available items of fuel economy-improving technology to the remaining portions of the fleet which will not employ those items by 1981. Also included is a projection of the fuel economy benefits

of introducing what the agency deems to be a moderate number of new truck models, but one representing some risk to the manufacturers. In general, the manufacturers already plan to introduce these new, more fuel efficient models. Not included is any substantial benefit from reductions in average engine displacement or drive ratios, or any weight reduction to vehicles, except that which results when a new model is introduced. To a great extent, these actions will be taken to comply with the 1980–81 standards. A detailed discussion of the base case is set forth in the agency's rulemaking support paper, copies of which are available from the individual listed as the "information contact" at the beginning of this notice. For information on the basis for the technological projections contained in this notice and the rulemaking support paper, reference should be made to the fuel economy "general reference" docket, contained in Room 5108 of the Department's headquarters, in Washington, D.C.

The agency projects that the manufacturers can apply fully interactive electronic engine controls to their fleets by the 1982 model year. (When the agency projects the application of technology, it means that the agency believes that the manufacturers either have the ability or will have the resources to develop the ability to apply a particular technology by a particular model year.) These controls are anticipated to allow the attainment of a 3 percent fuel economy improvement, on average, with a slightly higher improvement claimed by AMC. In addition, these controls are expected to permit the manufacturers to comply with more stringent 1983 emission standards without a loss in fuel economy. The basis for this projection is set forth in section V.(A) of the agency's rulemaking support paper.

The agency projects a fuel economy improvement of 1 percent from improved engine driven accessories. The improvement results from the use of variable speed accessory drives, which should be available for use by the 1984 model year. Ford, GM, and AM are also capable of completing other accessory improvements on their light truck fleets prior to that time for approximately a 1 percent fuel economy improvement per affected vehicle. Chrysler was projected to complete these improvements for the 1981 model year. These fuel economy improvement estimates are based on experimental studies of variable speed accessory drives conducted by the Transportation Systems Center, Department of Energy and Ford Motor Company, and experimental work on fan drives by the Eaton Manufacturing Company and the vehicle manufacturers. The results of this testing are available in the fuel economy "General Reference" docket.

The agency projects that in the early 1980's the light truck manufacturers can introduce engine and rear axle lubricants which will improve fuel economy by 3 percent per vehicle. These improvements would be achieved through a combination of reduced viscosity and the addition of friction modifiers. This projection is the same which the agency included in its analysis for the 1981 light truck standards. The 1 percent improvement for axle lubricants is available for the 1982 model year, since EPA approval is not required for the use of those lubricants. The 2 percent improvement previously assigned to engine lubricants is deemed feasible for no later than the 1983 model year. The fuel economy projections included in this notice do not reflect the 2 percent engine lubricant improvement, but this improvement will be included in the agency's analysis for the final rule. The agency encourages all organizations with data on the fuel economy improvement associated with lower viscosity, friction modified lubricants to submit that information in the form of comments on this notice. Also, the agency invites comment on the development of a test procedure to define these lubricants, which would permit EPA approval of their use in fuel economy testing.

The agency projects a 1 percent fuel economy benefit from the use of improved radial tires beginning with the 1984 model year. This improvement goes beyond the improvement from switching from bias belted to radial tires, which has now begun and which most manufacturers are expected to complete by 1981 in their 4x2 fleets. The extension of radials in the 4x4 fleet by all manufacturers will increase in model years 1982–85 because of projected improvements in sidewalls design. The fuel economy improvement due to improved radial tires results from new tire designs, improved compounding, and P-metric tires with higher inflation pressures becoming available during the 1982–1985 model years.

A variety of improvements to current transmissions are feasible by 1985. By 1982, nearly all manual transmissions offered could be four or five-speed overdrive or four-speed wide ratio direct drive. The projected improvement resulting from this change is 7 percent per affected 4x4 vehicle (due to the generally higher axle ratios of those trucks) and 5 percent for 4x2 trucks. The basis for these estimates is discussed in section V(C) of the Rulemaking Support Paper.

Several varieties of improved automatic transmissions are available for the 1982–85 time frame, including 4-speed overdrive transmissions with lock-up torque converters, 3-speed wide ratio transmissions with lock-up, and current 3-speed transmissions with the addition of a lock-up clutch. A 10 percent fuel economy improvement is estimated for the 4-speed unit, and 3.5 percent for the 3-speed lock-up. Tests by the Department indicate that the improvement in fuel economy associated with a 3-speed wide ratio transmission is between the improvements with the other two transmissions. For purposes of this rulemaking, the incremental fuel economy benefit associated with wide ratio transmission over the 3-speed lock-up is assigned to total drive ratio reductions, as discussed below. Although the 4-speed unit is clearly the most fuel efficient type, the agency projects that only Ford and GM will have sufficient resources to build the necessary production facilities for those transmissions. The other companies might be able to purchase these units from GM, should it have excess capacity, or go to a less fuel efficient, but less capital-intensive alternative such as the 3-speed wide ratio. The application of automatic transmission improvements is discussed in section V(C) of the rulemaking support paper.

The agency is projecting no substantial fuel economy improvements from reduction of aerodynamic drag except for improvements made as part of the introduction of a new model. In the absence of a total vehicle redesign, aerodynamic improvements to vehicles generally come from add-on items such as air dams. The extent to which these items can be used on light trucks is quite limited, since they typically reduce the vehicle's ground clearance. Since improvements of this type were projected for the existing fleet of light trucks for compliance with the 1980–81 standards, further improvements are not projected to those vehicles for 1982–85.

The final technological area considered in the base case is the use of alternative engines. For the purposes of this proceeding, the phrase "alternative engines" includes the diesel engine, the Ford PROCO ("programmed combustion") engine, turbocharged engines, and in the case of AM, the substitution of an engine of much smaller displacement.

Current diesel engines provide approximately a 25 percent fuel

economy improvement over a conventional gasoline engine of similar power, and are potentially one of the major methods available for improving light truck fuel economy. However, questions remain concerning the potential adverse health effects associated with diesel particulate emissions and the extent to which such effects, if any, could be mitigated through the use of control technology. Therefore, the agency has to date not included projections of diesel engine usage in its standard-setting analyses. In fact, even where manufacturers plan to use diesel engines, the agency has not included these engines in its estimates of fuel economy improvement capability. This policy is intended to assure that the fuel economy standards do not require dieselization until the health-related issues are resolved. To date, only GM plans significant dieselization of its light truck fleet, so only that company's average fuel economy projection is affected by this policy. If the health question is resolved in a manner allowing the expanded use of diesel engines, the agency may set the MY 1983 through 1985 standards at levels which reflect the potential fuel economy improvement available from diesel engines. The agency proposes to continue its current policy in this rulemaking, but invites comment on this issue. Comment is also invited on the levels of diesel engine sales which could be achieved in model years 1982–85. If the agency were to include diesel engines in the standard-setting analysis, it would consider the ability of manufacturers to design and build these engines, to modify existing gasoline engines to operate as diesels, and to purchase diesel engines from outside sources. Comments should address the number of diesel engines which could be obtained through each of these methods.

The PROCO engine is a stratified charge engine concept developed by Ford. This engine is intended to achieve approximately the same fuel economy benefit as the diesel engine, but without the particulate emission problems of diesels. The agency projects that this engine could feasibly be introduced in light trucks by the 1985 model year, after 1-to-2 years experience with the engine in passenger automobiles. The maximum usage rate of this engine in the 1985 light truck fleet is projected at 15 percent, with a 20 percent fuel economy benefit per affected vehicle. Considering the other engines available in the Ford line including projected new engines, both naturally aspirated and turbo-supercharged, this appears to be the maximum feasible application.

The substitution of a smaller displacement, turbocharged engine for a larger, naturally aspirated engine is projected to achieve a fuel economy benefit of 10 percent per affected vehicle. Smaller fuel economy benefits can be achieved without the use of a turbocharger and at much lower cost simply by reducing engine displacement through substitution of a smaller engine. However, that approach reduces a vehicle's acceleration and grade-climbing capability, making the vehicle less desirable for some purchasers. Because of the high cost of turbocharging, including engine redesign to accommodate the turbocharger, the agency projects that AM and Chrysler would not be capable of taking those actions in this time period. The agency projects that GM and Ford could replace larger engines with smaller displacement, turbocharged engines on a small portion of their light truck fleets by 1985. Further information in the use of turbocharging is contained in section V.B. of the rulemaking support paper.

Two major and closely related methods for improving fuel economy are reduction of vehicle weight and reduction of engine size and total drive ratio (CID x N/V). These items are considered principally as part of the introduction of new truck models (see next paragraph) and in the cases discussed in sections III. b, c, and d of this notice. The agency is projecting only slight weight reduction for any manufacturer in the absence of the introduction of a new model, because of the resource requirements associated with the new model introduction.

A benefit on the order of 0.4 mpg is projected for Chrysler's 4x2 fleet from the introduction of a smaller V–8 engine or a V–6 engine based upon the 318 or 360 engine. The agency has also estimated that a mix shift toward the 225 CID and 318 engines can enable Chrysler to increase its MY 1983 4x4 fleet average fuel economy by 0.3 mpg and that the addition of the small V–8 or V–6 engine in MY 1984 can provide an additional improvement of approximately 0.2 mpg. New smaller engines will provide Ford with a 0.1 mpg benefit in MY 1982.

The major fuel economy improvement projected in the base case is that resulting from the introduction of new models. The current domestic light truck fleets are comprised primarily of three basic models, a standard pickup truck, a van, and a utility vehicle derived from the pickup truck. However, due to the recent increases in gasoline prices, shortages of gasoline, and prospects for further price increases and shortages in the future, both the industry and the agency anticipate that several new, more fuel efficient truck models will be marketable in the 1982–85 period. These models are light-weight versions of the standard pickup truck and utility vehicle, compact versions of those trucks, and a compact van. The lightweight versions of the standard size trucks would be analogous to the downsized passenger automobiles offered in the past three years, with exterior dimensions reduced through more efficient packaging, without significant reduction of vehicle utility. These trucks could also extensively use lightweight materials such as aluminum, plastics, and high strength steel as substitutes for current materials. The compact pickup truck and utility vehicles would be somewhat larger than current imported trucks, but will use more lightweight materials. The agency has projected that the compact vans will be larger than the current Volkswagen van, but smaller than current domestic vans. In the case of Chrysler and GM, the agency projects that these vans are likely to have front-wheel drive packages derived from passenger cars; in the case of Ford, it appears more likely that the vehicle will be front engine, rear drive, given the absence of a suitably-sized Ford front-drive power train.

Fuel economy values for each of these projected new models were derived based on lower weight, improved aerodynamic characteristics, and various additional technologies similar to those that are being or will be incorporated in existing models. A detailed explanation of the derivation of fuel economy values for the new models is given in section VI and Appendix A of the Rulemaking Support Paper. The relationship between fuel economy, weight reduction, and reduction of engine displacement or drive ratio is calculated using the regression equation discussed in the agency's July, 1979 Rulemaking Support Paper on the 1981 light truck standard.

No new models of any fuel economy significance are projected for AM. That company's truck fleet is already much lighter in weight than its competitors.

Weight reduction of about 250 pounds is deemed feasible for the Jeep Cherokee and Wagoneer, AM's larger vehicles accounting for about one third of the AM's 4x4 fleet. The effect of this weight reduction is to improve that company's average fuel economy by 0.1 mpg.

Chrysler, like Ford in 1980 and GM, has apparently planned a limited redesign of its pickup trucks for 1981, in which only moderate reduction of test weight would be achieved. Although the

1980–81 new domestic pickup truck models introduced by the three major manufacturers do not achieve levels of weight reduction comparable to a completely redesigned standard size truck (such as the agency is projecting for GM in 1985), sufficient lead-time does not exist to alter these designs prior to introduction. To meet the demands of the market and requirements of the statute, these new truck models will require *another* complete redesign, beyond the near term financial capability of a company such as Chrysler. However, the agency projects that Chrysler can introduce a new compact pickup and utility line by the 1983 model year.

The agency is also projecting the introduction of a compact pickup and utility line for Ford in the 1983 model year. A compact van is projected in the following year. Ford is introducing a new line of standard size pickup and utility trucks for the 1980 model year, but as previously discussed, those trucks achieve only limited weight reduction. The 1983–84 model years of introduction are selected as conservative estimates of the earliest feasible introduction date since minimum lead-time for introduction of a new model is approximately three years, and introduction of more than one new model per year might not be feasible for Ford.

The agency projects that GM can redesign its entire light truck fleet except for its standard van by 1985. A compact pickup and utility truck redesign for the 1982 model year is deemed feasible, as is a new compact van in 1983 and a new standard pickup and utility truck in 1985. These are deemed the earliest feasible introduction dates under the base case because of leadtime considerations and the introduction of a redesigned standard pickup truck in 1981.

Sales levels for these new compact pickup truck and van models were estimated to be approximately 100,000 to 200,000 units per year, in the year of introduction. Gradual growth is projected in sales in subsequent years, reflecting market trends toward smaller vehicles and anticipated gasoline price increases. In previous years, demand for compact pickup trucks and vans might not have been sufficient to permit domestic manufacturers to produce those vehicles profitably. Recent sales trends indicate that, with current gasoline prices and expected price increases in the next several years, demand for more fuel efficient vehicles will permit domestic manufacture of these models. Recent sales trends show a rapid growth in market share for compact pickups. One of the issues in this rulemaking is the agency's projection that demand for compact light trucks will grow. The degree of growth is the major difference between the base case and case 2. The agency is soliciting comments on this issue, in particular on the market acceptance of these new models.

Sales fractions for the standard pickup trucks were expected to be reduced in future model years, taking into account the effect of compact pickup trucks drawing some sales away from the standard models. A more detailed discussion of the sales estimates for new models is contained in section VI of the rulemaking support paper.

Detailed analyses of possible new model introductions have not been performed for the foreign manufacturers. Those companies already manufacture compact vehicles with fuel economy higher than current domestic light trucks, so that redesigns are not expected to increase the fuel economy of the foreign-produced trucks substantially. In any case, those companies should have no difficulty in meeting any fuel economy standards which the agency may establish, given the capabilities of the domestic companies.

The projections included in the base case are summarized in the following table. Note that these items are not necessarily additive, e.g., improvements to automatic and manual transmissions cannot be applied to the same vehicle.

Fuel economy improvement	*Fuel economy benefit (per affected vehicle)*
Electronic engine controls	3 percent, beginning in 1982.
Turbocharged engines	10 percent.
PROCO engine	20 percent (Ford only).
4-sp. auto trans	10 percent (Ford, GM, AMC).
or	
3-sp. wide ratio and 3-sp. Lockup torque converter auto trans	3.5 percent.
or	
Manual overdrive or wide ratio manual transmission	5 to 7 percent.
Variable speed accessory drive	1 percent by 1984.
Improved lubricants	3 percent.
Improved radial tires	1 percent by 1984.
Improved aerodynamics	None other than for new models (slight benefit for AMC).
Weight reduction	None other than for new models (100 pounds for AMC on a fleet basis).
CID > N/V reduction	None (slight benefit for Ford 4 x 2's and Chrysler 4 x 4's).
New standard pickup/utility truck	Included at 22/19 mpg.
New compact pickup/utility	Included at 25/23 mpg.
New compact van	Included at 22 mpg.

These base case projections result in the following average fuel economy values for the various manufacturers:

	1982	1983	1984	1985
4 x 2				
AMC				
Chrysler	17.4	19.1	20.1	20.9
Ford	17.8	18.9	19.8	20.7
GM	18.6	19.4	19.9	22.2
4 x 4				
AMC	16.1	16.4	16.9	17.1
Chrysler	15.6	17.9	18.4	18.8
Ford	16.0	17.2	17.5	18.4
GM	17.1	17.4	17.8	19.3

b. *Case 2—Accelerated Sales of New Models.* One approach the manufacturers may be able to take to achieve fuel economy levels above the base case is to accelerate the schedule for introduction of one or more of the new models and to promote the sale of those models at the expense of their less efficient models. The agency, therefore, examined a case which is a modification of the base case that also includes for illustrative purposes the fuel economy benefits and additional costs which result from accelerating the introduction and increasing the sales of each new model. It should be kept in mind that this case (as well as cases 3 and 4) is discussed for illustrative purposes, and is not necessarily the agency's estimate of the maximum feasible fuel economy levels for each model year. Comment is also invited on lesser degrees of engine size reduction and on new model introduction schedules less ambitious than that of case 2.

Case 2 for Chrysler involves offering a compact van beginning in the 1985 model year, and selling slightly higher numbers of its small pickup and utility line in model years 1983 and 1984. The introduction of a Chrysler compact van is deemed feasible because of Chrysler's traditional emphasis on and success in the van market, and the availability of front-wheel drive power trains for such a vehicle due to Chrysler's introduction of a front drive compact passenger car beginning in the 1981 model year. The

availability of this fuel efficient car power train greatly reduces the cost of introducing a new model, with the main additional capital expenses being limited to the van-type body and perhaps some modifications to the vehicle's drive train and suspension to accommodate light truck service. Funds for the van could be made available by delaying certain programs now scheduled by Chrysler for MY 1985, including the downsized luxury, standard and mid-size car programs. The higher sales volumes for Chrysler's small pickup truck and utility vehicle line for Case 2 reflect the agency's assessment of current market trends toward more fuel efficient vehicles and the effect of future gasoline price increases.

The Case 2 new model introduction schedule for Ford accelerates the introduction date for the compact van one year to 1983. Included in the Case 2 analysis (but not in the proposed 1982 standard) is the introduction of a small pickup/utility truck line in 1982. Also, a new standard pickup truck is projected for 1985 introduction in this case. Higher sales levels are projected for the compact van and pickup models under Case 2 than under the Base Case, as well. The Ford compact van could be based upon the Fairmont drive train, modified as necessary for light truck usage. Sales levels for the new compact van and pickup/utility lines reflect gradual growth, so that by 1985, each line accounts for approximately 30 percent of Ford's light truck production. Such sales levels would be likely to be achieved only through higher gasoline prices, continuation of market trends toward smaller vehicles, and significant marketing efforts. The new standard pickup truck in 1985 would effectively repeat the process Ford undertook for the 1980 model year standard pickup, but assumes making improved fuel economy a much higher priority.

For GM, Case 2 envisions and introducing a new standard pickup truck in 1984 rather than 1985. Included for GM (but not reflected in the proposed 1982 standard) is a compact van introduction in 1982. Also market shares for the compact pickup/utility line are about 5 percent higher in each year under Case 2, compared to the Base Case. Leadtime for a 1984 introduction of a redesigned standard pickup truck should not be a major problem, although it does represent an unusually short interval between two redesigns.

Even under Case 2, no new models are projected for AM. However, the agency does project that by model year 1984, that company could obtain a more efficient six-cylinder engine in the 170–200 CID range as a replacement for its current 258, 304 and 360 CID engines. Potential sources for this engine include GM, Chrysler, or Renault, which is acquiring a significant ownership interest in AM.

For International Harvester, no major vehicle redesigns are projected through 1985. That company currently plans a rather ambitious program for the 1986 model year, in which it would introduce a composite body vehicle with substantially lighter weight. That program would be the first for a manufacturer of the size of IH. The agency does not believe that it can be accomplished any earlier than IH indicates, but will review the basis for IH's conclusion.

Average fuel economy levels achievable for the major domestic manufacturers under Case 2 are as follows:

	4x2			4x4		
	1983	1984	1985	1983	1984	1985
AMC				16.4	18.9	19.0
Chrysler	19.8	20.5	22.3	18.2	18.7	19.1
Ford	19.5	20.6	22.5	17.4	17.9	19.7
GM	19.6	22.2	22.6	17.6	19.3	19.6

c. *Case 3—Payload Reduction.* Another method for improving fuel economy in the 1982–85 period is for manufacturers to shift the mix of light trucks which they sell toward the trucks with smaller payloads. One way of approaching this question is to consider the effect of eliminating higher GVWR vehicles from the fleet and replacing them with lower GVWR vehicles. To assess an array of possibilities in this area, the agency considered the effect of such a shift on the 1979 model year light truck fleet. It should be noted that Case 2, in which compact pickup trucks and vans are introduced and the market share of standard pickup trucks and vans are correspondingly reduced, also involves a mix and vans are correspondingly reduced, also involves a mix shift.

The details of the Case 3 analysis are discussed in section VII of the agency's Rulemaking Support Paper. In general, the methodology used was to measure the effect on average fuel economy of assuming that all of a manufacturer's high GVWR series trucks within the regulated fleet (e.g., Chrysler's D–200 series) were replaced by the low GVWR series truck (e.g., D–150). In other words, the heavy duty segment of the light truck market was moved down a notch. This analysis did not yield substantial fuel economy improvements. Despite the major reduction in the functional capability (payload reduction of 200 to 2000 pounds) of the light truck fleet which this case entails, the average fuel economy of the manufacturers' fleets increased by only 0.2 to 0.8 mpg. The apparent reason for the small impact is that, in the 1979 light truck fleet, relatively wide ranges of GVWR occur within groups of trucks of fairly similar size and weight. For example, adding heavier duty springs and tires to a truck can add substantially to its GVWR, without greatly increasing curb weight or affecting fuel economy. Since the current fuel economy test procedures are sensitive to differences in curb weight but not to differences in payload capacity, trucks with widely differing GVWR's but relatively close curb weights and engine sizes would produce the equivalent fuel economy values in many cases.

d. *Case 4—Reduction in engine size.* Substantial fuel economy gains are feasible from reducing average engine displacement or total drive ratio, or some combination of both parameters. In the rulemaking to establish the 1980–81 light truck fuel economy standards, a reduction of approximately 10 percent in average CID x N/V was projected between 1979 and 1981 levels. A further CID x N/V reduction was projected in that proceeding to account for the ability of the manufacturers to use smaller engines or lower axle ratios as the weight, rolling resistance, and aerodynamic drag of their light trucks are reduced.

For the 1982–85 model years, the agency is seeking public comment on the extent to which even further engine size reductions can be implemented. To analyze this potential fuel economy improvement, the agency determined the minimum power requirements for the light truck fleet, i.e., the minimum functional performance criteria which trucks must be able to meet to do the jobs for which they are designed. These criteria were developed from information submitted by the manufacturers and the agency's own estimates. The criteria are that when the truck is fully loaded (at GVWR), it must be able to: 1) maintain a speed of 45 miles per hour on a 3 percent grade; 2) move 90 feet from a dead stop in 5 seconds on level ground; 3) start from a dead stop on a 17 percent grade; and 4) accelerate from a dead stop to 50 miles per hour in 25 seconds on level ground. Conceptually, the engine displacement reduction analyzed under Case 4 would produce a light truck fleet with performance at a level roughly equivalent to performance levels of the early 1950's.

The methodology used to project the fuel economy gains from reducing engine size is generally as follows. Only existing models in the base case with engine displacement of 300 CID or greater were considered candidates for reduced performance. Fuel economy values for replacement vehicles were projected, assuming that the replacement vehicle would use a small engine available to the manufacturers. For Chrysler, this approach meant using a 225 CID engine as the replacement engine, while it meant using a 250 CID engine as a surrogate engine for the other domestic manufacturers. In each case, the replacement vehicles with the small engine met all four minimum performance criteria. No new models were considered candidates for replacement, although manufacturers might well achieve CID x N/V reductions with those vehicles. The replacement process was phased-in gradually, with 20 percent of the base case fleet having the small engines in 1982, 40 percent of the fleet (not counting new models, which may also have small engines) having the small engines in 1983, 60 percent in 1984. By 1985, the sales levels of new models in the base case limit the number of vehicles which are replaced. See Table VII-7 in the Rulemaking Support Paper.

Average fuel economy levels projected under Case 4 are as follows:

	4x2			4x4		
	1983	1984	1985	1983	1984	1985
AMC				18.9	21.0	21.1
Chrysler	20.5	22.0	22.5	19.2	20.5	20.7
Ford	20.2	22.0	22.0	18.1	18.8	19.9
GM	20.2	21.1	22.5	18.6	19.6	20.0
IH						

It should be noted that Case 4 involves major engine displacement and axle ratio reductions for some vehicles and no reduction for other vehicles. Implicitly included in Case 4 is the possibility of a manufacturer's making a lesser reduction in CID x N/V for a greater number of vehicles, at least in the early years. New models and vehicles with engine displacement of less than 300 CID might be candidates for CID x N/V reduction by 1985, as well. Comment is invited on the extent to which such a fleet of trucks would be marketable, especially if all manufacturers made similar reductions in engine size.

IV. Economic Practicability

The agency considered the economic implications of the fuel economy increases discussed in this notice in accordance with the Act and Executive Order 12044. The agency's detailed analysis of the economic effects is set forth in a preliminary regulatory analysis, copies of which are available from our Office of Plans and Programs.

There are two major economic issues in this rulemaking. These are: (1) The investment capability of each of the manufacturers to build new plants or convert existing plants for the production of new smaller models, smaller engines, and more efficient transmissions; and (2) the marketability of the new models projected to be introduced by the agency versus that of the larger, less fuel efficient existing models.

Because the Treasury Department's analysis of Chrysler's cash flow position (conducted in response to that company's request for government financial assistance) is based on more extensive information than that available to the agency, and since the agency's projections of major light truck fuel economy improvement options are similar to those Chrysler has made public as part of its request for assistance, NHTSA is relying on the Treasury analysis instead of attempting to conduct a separate review of Chrysler's financial condition.

In order to evaluate the investment capabilities for the other manufacturers, a cash flow analysis was developed by the agency. This analysis used the agency's estimates of the capital investments that these manufacturers would have to make for all purposes for both passenger car and light truck operations, as well as assumptions regarding revenues, taxes, etc. Even if neither the fuel economy standards not market pressures required the manufacturers to make capital investments to improve the fuel economy of their 1982-85 light trucks, the manufacturers would still have large net cash drains. Results of the cash flow analysis show that GM and Ford will experience large net cash drains from North American operations during calendar years 1980-82 because of projected low unit volume sales and increased product related investments. The combined cash shortfall for Case 1 (Base Case) was estimated to be $2.4 billion in 1980, $1.3 billion in 1981, and $0.8 billion in 1982. In 1983 and 1984, both GM and Ford show a positive net cash generating position. (A net cash drain does not necessarily signify a loss but only shows the need for a company to generate revenue from external sources; i.e., from borrowings, sale of stock etc.) Thus, a major issue in the rulemaking is the difficulty the manufacturers might have in financing the fuel economy improvements projected by the agency. The Preliminary Regulatory Analysis sets forth some possible methods for GM and Ford to finance the cash drains due to the need to improve fuel economy and to other factors through internal and external funding. Comments are requested on this analysis.

Sensitivity analyses show that the cash flow position of each of the companies is very sensitive to sales levels and market shares. Thus, it is vitally important to the companies' well being that capital invested in new models during 1980-82 produce models which will sell well. On the other hand, it is also important that the manufacturers make the changes necessary to meet future consumer demand for increased fuel economy. If the demand for small pickups continues and the manufacturers do not introduce domestic compact light trucks, then the foreign manufacturers may increase their market share, resulting in poorer cash positions for the domestic companies.

The agency recognizes that the domestic manufacturers have not offered compact vans since the 1960's and have never offered domestically produced compact pickup trucks and that some risk is involved in introducing them. However, the agency is of the view that this risk is reasonable for several reasons. First, foreign produced compact pickup trucks have been sold successfully in this country for several years. Sales of these trucks have increased this year, while sales of virtually all other trucks have not fared so well. Based on sales figures through September of this year, the projected 1979 sales of compact pickups would reach nearly 480,000 units compared to 335,000 units for 1978. Second, the high price of gasoline and the possibility of recurring shortages should stimulate the demand for smaller, more fuel efficient truck models. Gasoline prices are expected to continue to rise in the future at a rate faster than the overall inflation rate, presumably making fuel efficiency even more important to truck purchasers. Failure to meet that demand poses a significant market risk for the domestic manufacturers. Third, evidence available to the agency indicates that there is significant "overbuying" in truck capacity, in the sense that many truck purchasers never approach using the full payload of their vehicles and many more use it only rarely. High gas prices and possible gas shortages should make truck purchasers carefully consider whether they can get by with a smaller, but more fuel efficient vehicle. Fourth,

current standard-size pickup trucks and vans would not be eliminated even under Case 2 of this rulemaking, so that purchasers who actually have a continuing need for a large truck (for commercial purposes, for example) will still have those trucks available. Trucks over 8500 pounds GVWR are not affected by these proposed levels.

The domestic manufacturers apparently agree that a market exists for the smaller vehicles, since virtually all of them plan to introduce such models in the 1982–85 time frame, even though fuel economy standards have not yet been issued for those years. The agency seeks comment on the potential market acceptance of new, more efficient truck models, especially comment supported by market surveys or similar data.

The agency believes that significant market risks exist for the manufacturers under cases 3 and 4. In the reduced payload case, many consumers might be giving up needed capacity while gaining little fuel economy improvement. In the reduced engine size case, it would mean returning to a level of average acceleration capability that was typical of the early 1950's. The agency also solicits comments on the degree to which the market would accept vehicles similar to those projected in cases 3 and 4.

V. Other Federal Standards

The agency considered the effects on fuel economy of future Federal motor vehicle standards from other programs in projecting the four cases described in this notice. Only two types of standards, emission and safety standards, are expected to have any potential for affecting 1982–85 fuel economy levels.

The Environmental Protection Agency has recently proposed (44 FR 40784, July 12, 1979) increases in stringency of light duty truck emission standards, and additional emission-related requirements for model year 1983. A theoretical engine optimization analysis conducted by the Department and described in section V of the Rulemaking Support Paper indicates that light trucks using electronic engine controls are capable of meeting the more stringent emission standards without fuel economy loss. The Environmental Protection Agency expressed the view, based on its examination of data available to it when its standards were proposed, that no fuel economy penalty need result from compliance with its proposed requirements. 44 FR 40793. Therefore, the four cases discussed in this notice include no fuel economy penalty for the emission requirements. However, the lower end of the range of proposed 1983–85 fuel economy standards discussed earlier in this notice reflects a 5 percent penalty for these emission requirements. This factor is included solely to illustrate the effect on final fuel economy standards should the manufacturers adequately support their claims of a penalty. Those claims appeared as unsupported assertions in the manufacturers' responses to the agency's July 1979 special order. Comments, with supporting test data and analyses based on appropriate technology and representative vehicles, are requested on this issue.

With respect to changes in safety standards applicable to light trucks, the agency projects that no fuel economy penalty would result. Weight increases associated with compliance with these standards should have a negligible effect on measured fuel economy.

VI. Need of the Nation to Conserve Energy

In 1959, the United States imported only 18 percent of its oil needs at a cost of $1.5 billion. By 1972, imported oil still accounted for only about 20 percent of our needs at a cost of $4 billion. But by 1975, with huge OPEC price increases, falling domestic crude oil production, and continued increases in domestic demand, 39 percent of our domestic demand had to be imported at a cost of $27 billion. And by 1978, even though demand was growing at a slower rate, imported oil cost the nation $42 billion for 45 percent of all the oil we used during that year.

The nation has, therefore, continued to become increasingly dependent for its oil supplies on the actions and decisions of foreign governments. This dependence and its effects have been demonstrated in the aftermath of the events in Iran when that country's oil production was stopped entirely in December 1978 and, once resumed, only returned to about one-half of its former level. This reduction was felt by all oil importers because it represented the difference between satisfying current world oil demand and a shortage of supply. OPEC, on whom the U.S. depended for 83 percent of its 1978 oil imports, took advantage of Iran's production cutback to raise prices by 60 percent from the December 31, 1978 level of $12.70 per barrel to about $20 per barrel as of July 1, 1979, and recently, several countries have raised the price beyond $24, the current OPEC base price. (On January 1, 1973, before the October OPEC embargo, a barrel of oil was priced at $2.59.) Our total bill for imported oil in 1979 is now expected to be over $60 billion, with substantial and diverse impacts on our trade deficit, inflation, economic growth, unemployment, and confidence in the dollar as an international reserve currency.

The rapid transition from a condition of apparent worldwide surplus in 1978 to one of shortage in 1979 has shown the instability of the world oil market. While oil from new sources such as the North Sea, Alaska's North Slope and Mexico might have been expected to increase overall supply, it has instead just about matched the decrease in supply from older sources such as the continental U.S. and Iran. If major supply increases are to be achieved within the next few years they must come from OPEC and especially from Saudi Arabia, OPEC's largest producer. Thus, the U.S.'s oil supply, and its economic growth and national security, are being heavily constrained by the decisions of a few foreign countries to control world oil prices and production.

This situation can be changed only by increasing its domestic energy production and by reducing demand. The fuel economy standards program is the most significant federal initiative to reduce demand. Since light trucks are estimated to account for about 7 percent of our total annual oil consumption, a further increase in their fuel efficiency, beyond that scheduled to be achieved through the MY 1981 standards, is an essential part of the nation's total effort to conserve energy. More stringent standards will contribute directly to achieving the President's pledge to limit foreign oil imports to a level no greater than the amount imported in 1978 (8.5 million barrels per day), and to cut U.S. dependence on foreign oil in half by 1990. Depending on the levels of the final 1982–85 light truck standards, gasoline consumption could be reduced by 15 to 23 billion gallons by 1990, compared to gasoline consumption which would occur were fuel economy to remain at the 1981 levels.

VII. Selection of Final Standards

As previously stated, final standards will be based on fuel economy levels achievable through the maximum feasible introduction of fuel economy improving technology, more fuel efficient new truck models, smaller engines and lower numerical drive ratios, payload reduction, and weight reduction (and, if the health effects issue is resolved, diesels). Standards are not necessarily keyed to the level of fuel economy achievable by the "least capable manufacturer." Instead, the agency will balance the benefits to the nation from a higher fuel economy standard against the difficulties of such a manufacturer. The agency will also consider carefully the competitive

effects of placing an undue strain on a particular company, and the fact that relief is available under the statue (in terms of reduction or elimination of civil penalty liability) should a company, despite its best efforts, fail to comply with standards.

In this regard, the agency is confronted with a difficult issue with respect to the treatment of Chrysler Corporation. Given Chrysler's recently publicized financial difficulties, which have been developing for many years, the agency is very reluctant to take any action which would make that company's situation any worse than it already is. However, simply setting lenient fuel economy standards may provide no real benefit to Chrysler. Many domestic light trucks and passenger automobiles have fared poorly in the marketplace recently, in substantial part due to their low fuel economy. The fuel efficient light trucks which Chrysler sells are predominantly captive imports, from which it likely derives a much smaller profit than it would if it produced the vehicles itself and sold them at levels the agency is projecting. Thus the actions which Chrysler must take to remain viable economically are the same actions it would be required to undertake to comply with stringent fuel economy standards. Should the agency establish lenient standards, and if Chrysler just met those standards, it is quite likely that the other manufacturers would *exceed* the standards to satisfy the demand for efficient trucks and further reduce Chrysler's market share.

Chrysler's product plan submitted to the U.S. Treasury Department in support of its request for Federal financial assistance provides for introduction of new models and other expenditures to meet all applicable fuel economy, safety, and emission standards. Chrysler's long term prospects hinge on the successful implementation of those plans. Copies of Chrysler's recent product plan and the Treasury Department's analysis of that plan are available in the agency's public docket.

Although the agency is proposing specific standards for 1982 rather than ranges, a number of factors could cause the final standards for that year to differ from the proposed values. For example, a shit in the truck market toward larger trucks and engines, as anticipated by Chrysler, could reduce the fuel economy improvement capability of the manufacturers for that year, at least if that shift could not be offset by the manufacturers' marketing efforts. Also, continued oil price and availability problems could make higher standards achievable for 1982, through permitting the acceleration of some new model introductions and the sale of trucks with smaller engines or lower numerical axle ratios.

Comments is requested on how the agency should treat Chrysler Corporation in its standard-setting analysis, should Chrysler turn out to be the "least capable manufacturer" in any given model year. There are at least three possible methods for dealing with Chrysler's having lower fuel economy improvement capability than the other manufacturers. First, the agency could set a separate fuel economy standard for Chrysler (and perhaps some other companies) at a lower level than the standards applicable to other manufacturers. This approach would maximize fuel savings, since all manufacturers would be required to achieve their maximum possible fuel economy improvement. The agency has invited comment on its legal authority to adopt this approach. The second approach would entail setting the same standard for Chrysler as for other manufacturers and keying the level of that standard to the capabilities of manufacturers other than Chrysler. The rationale for this approach would be that the fuel economy savings from setting a standard at that level instead of at the level of Chrysler's capabilities would outweigh the effect of the standard on Chrysler. This approach would mean that Chrysler would be faced with violating the standards. However, it would be highly likely that Chrysler could satisfy the statutory requirements for having any resulting civil penalities reduced or even eliminated. Third, the agency could set standards at Chrysler's level. This approach would result in a loss of fuel savings unless market forces caused the other manufacturers to exceed the standards to the full extent of their capability.

VIII. Impacts of the Fuel Economy Standards

The agency has analyzed the environmental impacts of a range of light truck fuel economy standards in accordance with the requirements of the National Environmental Policy Act, 42 U.S.C. 4321, *et seq.* Copies of that analysis are available from the "information contact" listed at the beginning of this notice. The agency's analysis concludes that no significant adverse environmental impact will result from the execution of this rulemaking action. The total impact on the environment is not expected to be large. The magnitude of change in use of materials, water usage, air quality, and other environmental factors is much less than the changes brought about by cyclical fluctuations in the national economy. The largest impact of the standards on the environment is the reduced energy consumption, a positive impact.

The economic impacts of this proposal were also analyzed, in accordance with Executive Order 12044 and the Department's regulations, 44 FR 11034. Since this proposal is deemed "significant," a Preliminary Regulatory Analysis (copies of which are available in the docket and from the agency's Office of Plans and Programs, Room 5212 of the Nassif Building, in Washington, D.C.) was prepared to set forth this analysis. The main conclusions set forth in the Preliminary Regulatory Analysis are that in order to meet the proposed ranges of standards, total capital investment by GM, Ford, and Chrysler would be between $3.9 billion and $4.8 billion and average retail prices of a MY 1985 vehicle compared to a MY 1981 vehicle would increase $350 to $615 per vehicle. In terms of benefits, fuel savings over the lifetime of the MYs 1982–1985 fleets would be 11–17 billion gallons and the present value of operating cost savings of a MY 1985 vehicle compared to a MY 1981 vehicle would be $860 to $1,735 per vehicle. Thus, the range of standards being examined would result in net lifetime consumer savings of $510 to $1,120 per vehicle. The proposed rule is not anticipated to have a significant impact on employment, unless the sales levels of the new models do not materialize. Conversely, should new models be demanded by consumers but not available in sufficient quantities, industry sales and employment would experience declines similar to those of 1979.

Low unit volume sales projections and capital requirements needed to improve fuel economy result in negative cash flow positions for the manufacturers in calendar years 1980–82. A sensitivity analysis assuming no light truck capital spending after MY 1981 resulted in a substantial improvement in GM's cash flow situation, a lesser improvement in Ford's, and only minimally improved Chrysler's. However, this sensitivity analysis assumed no change in market share, whereas, in reality the foreign manufacturers may take away some of the domestic manufacturers' market share possibly leaving them in a worse cash flow position than if they had made the capital investments in the compact pickup trucks. Thus, the risk involved in financing the new models as well as

their sales potential appear to be the overriding issues.

A 30-day comment period is being provided for the 1982 standards due to the statutory requirement that the standards be issued by March, 1980. Issuance of this proposal was delayed by a variety of factors, including the late response of some manufacturers to the special orders issued by this agency to obtain up-to-date information in support of this rulemaking and by requests to lower the 1981 standards. The responses to the special orders were originally due in mid-September. Most manufacturers responded either then or within several weeks of that time. Since many of those special order responses were incomplete, the agency has directed each manufacturer involved to comply with the balance of the special order sent to it. One manufacturer, Chrysler, responded on October 29 with tentative answers to most questions, but still has not submitted its formal, final response.

Interested persons are invited to submit comments on the proposal. It is requested but not required that 10 copies be submitted.

All comments must be limited not to exceed 15 pages in length. Necessary attachments may be appended to these submissions without regard to the 15 page limit. This limitation is intended to encourage commenters to detail their primary arguments in a concise fashion.

If a commenter wishes to submit certain information under a claim of confidentiality, three copies of the complete submission, including purportedly confidential information, should be submitted to the Chief Counsel, NHTSA, at the street address given above, and seven copies from which the purportedly confidential information has been deleted should be submitted to the Docket Section. Any claim of confidentiality must be supported by a statement demonstrating that the information falls within 5 U.S.C. section 552(b)(4), and that disclosure of the information would result in significant competitive damage; specifying the period during which the information must be withheld to avoid that damage; and showing that earlier disclosure would result in that damage. In addition, the commenter or, in the case of a corporation, a responsible corporate official authorized to speak for the corporation must certify in writing that each item for which confidential treatment is requested is in fact confidential within the meaning of section 552(b)(4) and that a diligent search has been conducted by the commenter or its employees to assure that none of the specified items has previously been disclosed or otherwise become available to the public.

All comments received before the close of business on the comment closing date indicated above will be considered, and will be available for examination in the docket at the above address both before and after that date. To the extent possible, comments filed after the closing date will also be considered. However, the rulemaking action may proceed at any time after that date, and comments received after the closing date and too late for consideration in regard to the action will be treated as suggestions for future rulemaking. The NHTSA will continue to file relevant material as it becomes available in the docket after the closing date, and it is recommended that interested persons continue to examine the docket for new material.

Those persons desiring to be notified upon receipt of their comments in the rules docket should enclose, in the envelope with their comments, a self-addressed stamped postcard. Upon receiving the comments, the docket supervisor will return the postcard by mail.

(Sec. 9, Pub. L. 89-670, 80 Stat. 931 (49 U.S.C. 1657); sec. 301, Pub. L. 94-163, 89 Stat. 901 (15 U.S.C. 2002); delegation of authority at 49 FR 25015, June 22, 1976, and 43 FR 8525, March 2, 1978)

Issued on December 21, 1979.

Joan Claybrook,

Administrator.

[FR Doc. 79-39724 Filed 12-26-79; 2:20 pm]

BILLING CODE 4910-59-M

---

49 CFR Part 571

[Docket No. 74-14; Notice 17]

Federal Motor Vehicle Safety Standards; Improvement of Seat Belt Assemblies

AGENCY: National Highway Traffic Safety Administration (NHTSA).

ACTION: Notice of proposed rulemaking.

SUMMARY: This notice proposes to amend Safety Standard No. 208, *Occupant Crash Protection,* to specify additional performance requirements for both manual and automatic safety belt assemblies installed in motor vehicles with a Gross Vehicle Weight Rating of 10,000 pounds or less. The proposed performance requirements are intended to increase the benefits of safety belts by improving the comfort and convenience of belt assemblies and thereby raise the current low rate of safety belt use. Additionally, the notice proposes changes in the warning system requirements for safety belts, which are also intended to increase the rate of belt use. The proposed requirements would apply to both manual and automatic belts installed on all vehicles, except for manual lap and shoulder combination belts installed at the front outboard designated seating position in passenger cars.

DATES: Proposed effective date: September 1, 1981, Comment closing date: April 1, 1980.

ADDRESSES: Comments should refer to the docket number and notice number and be submitted to: Docket Section Room 5108, Nassif Building, 400 Seventh Street, SW., Washington, D.C. 20590.

FOR FURTHER INFORMATION CONTACT: Mr. Robert Nelson, Office of Vehicle Safety Standards, National Highway Traffic Safety Administration, Washington, D.C. 20590 (202) 426-2815.

SUPPLEMENTARY INFORMATION: Safety Standard No. 208, *Occupant Crash Protection* (43 FR 571.208) currently requires most motor vehicles to be equipped with safety belts at each designated seating position. Beginning in 1981 and phasing in over the following two years, passenger cars will be required to be equipped with automatic occupant crash protection (restraint systems that require no action by occupants, such as fastening belts, to be effective). Many new automobiles will be equipped with automatic safety belts to comply with the automatic restraint requirements (belts that move into place around vehicle occupants automatically). The requirements specified in this proposal are designed to ensure that both the automatic belts, and the manual belts installed in future vehicles will be comfortable and convenient to use. The proposed requirements would be applicable to seat belt assemblies installed in all vehicles with a GVWR of 10,000 pounds of less, except for Type 2 manual belts (lap and shoulder combination belts) installed in front seating positions in passenger cars. Since Type 2 manual belts will be phased out in passenger cars when the automatic restraint requirements become effective, the agency has tentatively determined that manufacturers should be allowed to devote their resources toward automatic restraints in these vehicles and toward the development of comfortable and convenient Type 1 manual belts (lap belts), which will be installed in rear seats in passenger cars and in some front seats in conjunction with air bags or single diagonal automatic belts.

The agency does encourage manufacturers, however, to voluntarily incorporate as many of the concepts discussed in this notice as is possible in

their vehicles equipped with Type 2 manual belts. Hundreds of thousands of passenger cars will be equipped with manual belts before the automatic restraint requirements have been phased-in for all car sizes. It is extremely important that the belt systems on these vehicles be comfortable to wear and convenient to use so that the current low rate of belt use can be increased. Many of the improvements discussed in this notice can be included easily and cheaply during the normal model-year design changes.

Rationale for the Proposal

Almost all passenger cars on the road today are equipped with manual safety belts, more than half of which are combination lap/shoulder belts. In spite of the clearly established value of safety belts in reducing deaths and injuries, the data on belt usage in the United States have not been encouraging. National surveys in 1971 found overall usage to be about 17 percent (DOT HS-800-584); during 1974; usage increased to more than 20 percent, mainly due to the warning/interlock systems in 1974 model cars (DOT HS-801-594); in 1976 and 1977, usage slipped back to about 18 percent (DOT HS-803-354) and, according to an ongoing on-the-road survey, usage has continued to decline to a current low of about 14 percent.

Many persons may find it difficult to understand why usage is not substantially higher, since a majority of people indicate they are aware that belts offer protection during a crash (Hart Survey, DOT HS-80-585). Of the available explanations, the inconvenience and discomfort associated with wearing many belt systems seem to be among the most prominent and plausible factors. In 1971, when a nationally representative sample of drivers were asked why they did not wear belts, they provided the following responses, ranked in order of descending importance: (1) "never formed habit;" (2) "belts are inconvenient and uncomfortable;" (3) "too lazy to fasten;" (4) "belts not thought necessary for short trips," and (5) "doubt value of belts."

Comfort and convenience problems were quite obvious to anyone who attempted to use the belts in cars of the early 1970's. Federal regulations attempting to improve these problems were issued for 1972 and later model passenger cars. Those regulations required (1) retractors for the lap belts (to stow belts neatly and to return the latchplate to the same position each time as an aid to accessibility); (2) combined lap and shoulder belts to yield a 3-point belt system (both to reduce the confusion associated with the clutter of separate lap and shoulder belts in the front seat and to reduce the number of buckles that must be fastened to obtain both lap and upper torso protection); and (3) shoulder belt retractors designed to lock up only in emergencies (to permit upper torso freedom except during collisions or sudden braking).

In spite of these improvements, more than half of all owners of 1974 model cars still reported comfort and convenience related problems with their safety belts (DOT HS-801-594). A year later, a similar study involving interviews with persons who were not users of 1975 belt systems elicited much the same responses. Again, in 1978, when a national sample of drivers was asked what they didn't like about belts, the most common responses were: "too confining", "uncomfortable", and "inconvenient" (DOT HS-803-370).

Substantially the same findings have been obtained by a number of other investigators, both in the United States and other countries. Therefore, a large number of research projects point conclusively to the fact that comfort and convenience play an important role in affecting belt usage.

Some of the motor vehicle manufacturers have taken the position that comfort and convenience factors do not play strong roles in affecting belt usage. Their apparent basis for this statement is the current absence of a demonstrable correlation between seat usage and indices of comfort and convenience (i.e., judgments by people of the relative comfort and convenience of a particular belt system in particular cars).

The absence of a definitive correlation is explainable. First, the current low usage rate (14 percent, overall), when viewed in the context of the innumerable complaints about comfort and convenience in belt systems, strongly implies that there is a special segment of the motoring public which is apparently comprised of dedicated users who continue to wear belts despite almost any attendant difficulty or discomfort. With such persons, a demonstrable correlation would not be expected between usage and indices of comfort and convenience.

Second, belt usage affected by a number of factors other than comfort and convenience. Safety awareness or safety consciousness appears to play an important role in usage. This is evident not only from interviews with both users and non-users, but also from the observed positive correlation between seat belt usage and proper adjustment of head restraints, both safety related items (i.e., person likely to wear belts are also likely to properly adjust their head restraints).

Risk perception also plays a role in influencing seat belt usage, as evidenced by the reasons cited in interviews for wearing belts and also by observed higher usage in smaller cars, on higher speed roads, during extremely bad weather, on long trips, etc. In addition, other factors not involving comfort and convenience may also be correlated with usage, although the basis for the correlation is not yet established. For example, there are significantly higher wearing rates in the western United States (as opposed to the eastern United States) and much higher wearing rates in foreign automobiles than in domestic cars.

All of these other factors are not systematically related to comfort and convenience, yet they are associated with large differences in wearing rates. Thus, their presence or absence occurring in an uncontrolled fashion, as happens in the real world of traffic, would tend to obscure the correlations that exist between usage and comfort and convenience.

Occupant "motivation" affects belt wearing. Generally, when the "net motivation" to wear belts is increased by some means, usage also increases. Increased motivation induced by the warning interlock system required on 1974 and some 1975 cars was accompanied by usage rates which initially were in excess of 75 percent. In areas having mandatory belt-use laws, usage rates between 60 and 80 percent have been achieved in some countries when the law is enforced. In Canada, use rates have remained below these levels. It should be noted that these high rates are brought about by conditions which typically make "not-wearing" belts a less attractive behavioral alternative than "wearing" belts. For a variety of reasons, however, these avenues to increase motivation do not now appear to be viable alternatives in the United States. Among the available realistic options, the most effective and constructive approach in this country would seem to combine effective information programs (i.e., aimed to increase the motoring public's motivatioin to use restraints) with a program of action which would serve to make belt wearing a less difficult and less onerous task (i.e., to reduce the negatively motivating influences). These programs, especially the latter, should be undertaken regardless of whether belt usage is required by law or is voluntary. In particular, the motoring public should expect and obtain belt

restraints which are free of the comfort and convenience problems which have plaqued such systems in the past and which continue to be present in the newest systems.

In a submission to the docket, which cites a study by MOR, Incorprorated, General Motors implies that improving comfort and convenience would not be justified by increases in belt usage. GM cites the MOR contentioin that comfort and convenience improvements would only increase seat belt usage by 1.7 percent. The basis for the MOR conclusion is, however, neither straightforward nor simple. At the outset, is should be noted that there is no direct evidence to show what proportion of non-users would become users if comfort and convenience were improved. It is fair to say that many individuals have become non-users for what they considered to be good and sufficient reasons and most non-users have established strong habit patterns of not wearing belts. As stated previously, most of the non-users cite discomfort and inconvenience as the reason for not wearing belts. Assuming that techniques were found to increase motivatioin to try belts once again, the very same problems with comfort and convenience which discouraged non-users from wearing belts originally would operate again. Likewise, if effective information programs were initiated which increased the motivation of younger individuals to use belts, allowing belt system problems to persist would only serve to undermine any positive influence these programs could have.

Generally, first-hand experience supports the agreement found in most studies citing comfort and convenience as a preeminent problem discouraging use. Hardly anyone has entered a car who has not personally encountered or witnessed difficulties, annoyances, and discomfort associated with trying to use belt restraint systems.

Even in a study confined to testing most of the restraint systems to be found in the newest model cars (1979), the results echo the previous findings (The Verve Study, DOT HS-803-370). Of particular interest is the proportion of "moderate" or "serious" problems consumers had with the 1979 belt systems. On the average, 57 percent of the individuals participating in the study reported at least one moderate or serious problem. With the "worst" car, 85 percent of the individuals reported such problems. Even with the "best" car, 35 percent of the participants had at least one moderate or serious problem.

It is particularly important to note that the acceptability of a safety belt system should not be determined by averaging its various assets and liabilities. One *significant* problem can render the system unacceptable. For example, no matter how comfortable a belt system is, it will not be worn if the finding, extending, or buckling of the system is beyond the capabilities or willingness of the perspective user. Similarly, if a belt system, once on, is extremely uncomfortable, other factors such as accessibility or ease of buckling will not compensate sufficiently to induce wearing. *Any* comfort or convenience problem which is beyond the capability or willingness of the potential user to tolerate can and frequently does create a non-user. It is for these reasons that inconvenience and discomfort are increasingly being viewed as factors leading to non-use.

There is some real world, in-traffic data which supports our analysis projecting benefits from eliminating comfort and convenience problems. The most vivid and concrete example was noted with 1974 model automobiles. In traffic observations made when occupants of other 1974 U.S. vehicles had belt usage rates of about 65 percent, 1974 Chrysler products had usage of about 45 percent. This same 20 percent difference was also confirmed in more closely controlled studies using rental cars, involving about 42,000 observations. At that time, the only significant difference between Chrysler's system and that used by other U.S. manufacturers was a "webbing sensitive" shoulder-belt-retractor locking system which made donning (putting on) the belt more difficult than with other systems. Viewed from another perspective, had this one problem not existed, the wearing rate in the Chrysler cars would almost certainly have been about 20 percent higher, and an upward shift in usage of that size would have represented a gain of approximately 45 percent in 1974 Chrysler product belt users.

Even with today's low use rates, the influence of discomfort on usage can clearly be seen by comparing belt use rates of men and women. Recent data show that women use belts more frequently than men (16.4 precent and 12.6 percent, respectively), the overall incremental difference being 30 percent. An analysis of this difference, however, reveals an 86 percent incremental difference in favor of women for lap belt usage (6.9 percent versus 3.7 percent) in sharp contrast with shoulder belt use, where the incremental difference drops to 7 percent (9.5 percent versus 8.9 percent) under circumstances clearly reflecting the existence of greater problems of chest fit and pressure for women. These last results are based on more than 67,000 observations in traffic.

In reviewing all of the available evidence, the agency must note the enormous discrepancy between the MOR projection and substantially all the rest of the data. The MOR study contends that only a 1.7 percent gain in usage would take place if seat belt comfort and convenience were improved. However, the other data include: (1) the repeated finding that the principal reported causes for non-use of belts are discomfort and inconvenience; (2) the persistence of such problems for more than a decade; (3) the fact that only one such problem apparently caused a reduction of 20 percent in 1974-model usage rate; and (4) the fact that the effects of discomfort are large enough to be seen in some current usage data, even in the presence of factors which would tend to obscure any correlation.

The agency also notes the sharp contrast between the relatively obscure and complex basis of the MOR derivation of the extent to which comfort and convenience influence usage and the fairly direct approach used by the agency. The former uses techniques like "path analysis" and requires substantial inferential processes to go "beyond the direct answers of those interviewed." The agency approach was straightforward. It involved asking individuals for the basis of their behavior and supporting these data by confirming evidence obtained from in-traffic observations and more rigorous studies observing belt usage behavior in automobiles under highly controlled conditions.

The comfort and convenience problems addressed by this proposed rulemaking action represent the most egregious problems that have been noted with the restraint systems. An exact quantification of the expected incremental use increase associated with each aspect of the proposed rule would be difficult, time consuming, and extremely expensive to calculate. However, a projection can be based on some combination of: (1) reports by the motoring public regarding their reasons for non-use, (2) the usage decrement associated with the 1974 Chrysler belts, and (3) the present difference in usage of "lap belt only" versus "both belts" by women. From these data, it would not be unrealistic to expect that eliminating major safety belt comfort and convenience problems in manual belts should produce a net, long-term gain in

usage from the current 14 percent to as high as 22 percent.

The agency has also tentatively determined that proposed performance requirements should be specified for manual belts (except for front-seat Type 2 belts in passenger cars) as well as automatic safety belts. Over 15 million new light trucks and vans will be equipped with manual safety belts (both Type 1 and Type 2) before automatic restraint requirements are implemented for these vehicle types sometime after 1984. These millions of vehicles will be used on the roads through the mid-1990's. In addition, manual Type 1 safety belts will continue to be installed in the back seats of all new vehicles, and in some front seats, even after the mid-1980's. Therefore, many lives can be saved and injuries prevented by increasing the rate of use of these manual belts.

Automatic safety belt systems will be installed in a large number of new cars beginning with the 1982 model year. Since automatic belts will deploy around all front seat occupants, including those that now typically do not use manual belts, and since some designs can be disconnected, it is imperative that the automatic belts be comfortable so that they will be acceptable to the public. This approach will keep the rate of non-use at a minimum and assure that the automatic restraint program can fully realize its life-savings potential.

The existing requirements for seat belt characteristics related to comfort and convenience in Standards No. 208 are as follows: The belts must "fit" persons of specified sizes; front outboard lap belts must adjust by means of automatic-locking or emergency-locking retractors (ELR's) and shoulder portions must adjust by means of ELR's (in the first two rows of seats in a vehicle); and the latch mechanism must be accessible, must release both portions of a Type-2 belt simultaneously, and must release by pushbutton action (manual belts). Safety Standard No. 210 (49 CFR 571.210) specifies anchorage location requirements to improve belt fit and effectiveness.

These existing requirements have not been sufficient to product belt system designs with adequate comfort and convenience characteristics. Many belts are difficult to reach (the existing accessibility requirement does not define "accessibility"), do not fit properly (e.g., cross the occupant's neck, apply too much pressure, are difficult to buckle and become too tight.

In response to these problems, an advance notice of proposed rulemaking was issued in 1976 discussing possible additional requirements in FMVSS 208 (41 FR 54961, December 16, 1976). The possible requirements discussed in that notice were based primarily on recommendations from a study by Man Factors Inc. (Sources and Remedies for Restraint System Discomfort and Inconveniences, DOT HS-801-277). The major specifications proposed were as follows:

1. The inboard end (i.e., receptacle end) of seat belt assemblies at front and rear outboard designated seating positions should have a minimum "stiffness", tested by means of a lateral force application to the belt as installed in the vehicle. ("Outboard designated seating positions" is a term used primarily in connection with a three position seat to distinguish between (a) the two positions next to the sides of the vehicle and (b) the center position). Also, the receptacle end of belt assemblies should be not less than 6 inches and not more than 7 inches from the occupant's centerline, as measured in accordance with the existing requirements of S7.1.2 of Standard 208. These recommendations were to make the belt mechanisms less likely to fall down between seat and seat back and easier to buckle.

2. The force on the pushbutton (minimum size of 1 inch by 1 inch) to release a seat belt system should be limited to 2 to 4 pounds (no force limits are currently required). The pushbutton should be required to be recessed a minimum of one-thirty second of an inch and not more than one-eighth of an inch. These requirements were to make removal of the belt fast and easy. To balance comfort and convenience considerations against potential loss of safety performance, there should also be limits on hardware size to avoid injury-producing forces on the abdomen during a crash.

3. To further facilitate accessibility and ease of buckling, the shoulder portion of a Type-2 assembly (a combination lap and shoulder belt assembly) should join the lap belt portion of the assembly within 5 inches of the center of the pushbutton of the latch mechanism (so that the buckle and latchplate could be grasped and fastened easily). The requirements of S7.1.2 of FMVSS 208, regarding the location of the juncture of lap and shoulder belts, would remain in effect. In the fully retracted position, the outboard portion of the assembly should be incapable of being caught in a closing door, the shoulder portion should lie along the side of the seat back, and the latch plate should be no closer than 4 inches to the rearmost surface of any armrest located in the door.

4. Both shoulder harness and lap belt retraction should be by vehicle sensitive emergency locking retractors (ELR's). Automatic locking retractors (ALR's) could be used on lap belts only if they locked after the buckle was fastened (i.e., they could not lock while the belt was being donned). All electrically operated retractors should lock if electric power is lost. ELR's could have incorporated a manually actuated lock, as long as the lock released automatically upon unfastening of the belt. Those requirements were to make it easier to put belts on and to preclude the continual tightening of belts around occupants that can occur with ALR's.

5. Retractors, as tested in the vehicle, should fully retract both the lap and shoulder belts. A maximum of 3 pounds of belt tension should be permitted on a 50th-percentile male occupant's pelvis, with a maximum of 1.5 pounds on his shoulder. In addition, no more than 4.5 pounds of force should be needed to pull the latch plate from its fully retracted position to its latched position.

6. The retraction of all belt restraint systems should be sufficiently rapid (and consistent) to prevent entrapment of the belt or its hardware when the door is closed immediately after exiting rapidly.

7. "Comfort clips" should be permitted only on Type-2 assemblies that are equipped with a separate retractor on the lap belt portion. Comfort clips are devices that introduce slack in the belt system so that it does not become too tight. They are dangerous, however, because too much slack in the lap belt portion of the assembly will allow the occupant to "submarine" under the belt during an accident. In the proposed requirements, comfort clips are prohibited, but belt pressure must be limited by other means.

Automatic comfort devices of the "window-shade retractor" type would have been allowed if they retracted automatically and sufficiently to permit full retraction of the assembly whenever the assembly was unfastened and the belt released, and whenever the door was opened.

8. To improve and maintain comfort and "fit", the shoulder belt should pass through seat-mounted guides to prevent change in belt geometry with changes in seat position.

9. The concept of belt assembly "fit" should also require that a 5th-percentile female be capable, while restrained at the driver's position, of reaching the vehicle's driving controls, the glove compartment latch, the nearest ash tray,

the left front window handle, the seat-adjustment control, and the locks on both front doors.

10. A clearly-discernible contrasting color stripe should be imprinted on the "reverse" side of the webbing (normally the side next to user's body) to aid the user in determining if belts are twisted.

11. Related changes should be made in Standard No. 209. To protect clothing against damage from rough or sharp edges or protrusions on hardware or webbing of the assembly, the webbing and hardware (as assembled) should be drawn over a fabric-covered surface (having specified characteristics and size) without snagging or abrasion.

While a majority of the comments to the advance notice agreed that modifications to current seat belt designs could improve the comfort and convenience of the systems, there was little agreement on optimum designs to achieve this improvement. This response was not unexpected, since some aspects of comfort and convenience are qualities of complex character and it is difficult to define them completely in simple objective terms. (Copies of the comments to the advance notice and a NHTSA summary to those comments can be found in NHTSA Docket No. 74-14; Notice 7).

Based on a review of the comments and related NHTSA studies conducted in response to those comments, however, the agency has determined that there are a variety of relatively simple, objective performance requirements that can improve the comfort and convenience of seat belt systems. Agency studies indicate that, with few exceptions, current vehicle body styles are established with little regard to their impact on effective and usable restraint systems. Restraint systems appear to be viewed by vehicle designers as "add-ons" and, consequently, the restraint systems appear to be designed to fit the vehicle, and not the passenger.

The requirements proposed in this notice represent a selection and condensation of the specifications discussed in the advance notice. The requirements are based on the comments to that notice and on additional NHTSA studies concerning which of the various requirements would be the most practicable and effective in producing improvements in seat belt comfort and convenience (DOT-HS-803 809; DOT-HS-802 113). Many of the recommendations discussed in the advance notice are not included in this proposal because of the agency's analysis of negative comments from manufacturers concerning practicability, cost and relationship to seat belt comfort and convenience. Also, while there are other aspects of seat belt performance and design that could improve comfort and convenience, the agency has determined that the requirements proposed in this notice are a reasonable "first step" toward significant improvement over current seat belt designs. Further, the agency has determined that the proposed requirements are easily within the engineering capabilities of the industry and, in combination with other programs to encourage belt use, should help to increase the rate of use of both manual and automatic safety belt systems.

The requirements proposed in this notice relate to the following aspects of seat belt assembly performance and design: torso belt occupant fit, torso belt body contact pressure, automatic locking retractors (ALR'c), "comfort clips," latchplate accessibility, webbing guides, convenience hooks for belt webbing, clearance between webbing and seat cushion, clearance between webbing and the occupant's head, and motorized automatic belts. (The relationship of these items to belt comfort and convenience are explained more fully below.) Additionally, the notice proposes new warning system requirements for both manual and automatic belts, which are also intended to increase the current rate of belt use.

A. Proposed Requirements To Increase Seat Belt Comfort.

Torso Belt Occupant Fit (Manual and Automatic Belts)

Improper fit of the torso or shoulder belt has been identified as a major factor determining whether a vehicle occupant will wear a particular safety belt system. The two chief complaints about torso belt fit are that the belt webbing rubs against the occupant's neck and face or that it rubs across the tip of the person's shoulder. Although these conditions may occur in some systems when the occupant leans forward to reach controls or turns toward the rear of the vehicle, most persons ignore momentary discomfort with belt systems. Both of these problems are most noticeable and bothersome when the occupant is sitting in the normal riding position. Many females also complain about rubbing of the torso belt across the breast, generally on the inboard side. To alleviate these torso belt fit problems, the belt installation configuration must be such that the torso belt crosses the occupant's shoulder and chest approximately midway between the neck and shoulder tip, and crosses the sternum approximately midway between the breasts. Although many occupants can often adjust the torso belt to fit relatively well for short periods, unless the basic belt geometry is properly determined by the location of the upper and lower belt anchorages, the tendency of belt webbing to seek the shortest distance between the two anchor points can cause the belt to move out of the position most comfortable to the occupant.

In order for any torso belt to fit the range of expected occupant users (5th percentile female through 95th percentile adult male), the torso belt must be anchored so that the belt webbing always lies in a narrowly defined envelope across the chest and shoulder. The proposed requirements for torso belt fit specify geometric criteria to describe the required chest-crossing envelope (Figure 7). The chest-crossing envelope that is specified represents transfers of the optimized envelopes of both a 5th percentile and 95th percentile dummy to the 50th percentile dummy. These envelopes were all verified on carefully selected, representative human subjects to ensure that a specific torso belt that falls within the envelope prescribed on the 50th percentile dummy will cross members of the expected user population with a minimum of discomfort.

The proposed requirement for fit of torso belt would allow manufacturers to use any belt design provided the belt webbing falls within the prescribed envelope. With proposed requirements, the requirements discussed in the advance notice relating to anchoring the belts to the seat back, length of belt buckle extension and anchorage geometry would not be necessary. Therefore, those specifications are not included in this proposal.

Torso Belt Body Contact Pressure (Manual and Automatic Belts)

NHTSA research indicates that occupants are likely to complain about belt pressure if the torso belt net contact force is greater than .7 pounds, wherever it touches the occupant's body. The sensitivity to heavy belt pressure is greatest when the webbing contacts the wearer's neck or face, shoulder or breast, and seems to be much less significant when there is proper torso webbing fit. In order to minimize discomfort caused by excessive webbing pressure, the proposed requirements specify that the torso portion of any belt system shall not create a contact pressure exceeding .7 pounds, anywhere it touches the occupant's shoulder, neck or chest. This webbing pressure criterion was developed in NHTSA research in which

webbing retractor forces were varied in an experimental belt system mounted in a production vehicle. A series of male and female test subjects experienced each force level during on-the-road driving tests and reported whether the pressure felt was satisfactory or too great.

The proposed limitation on belt contact force would serve essentially the same purpose, i.e., increasing the comfort of belt users, as "comfort clips", "window-shade devices" and other belt tension relief mechanisms without reducing the effectiveness of belt systems as those tension-relief mechanisms often do. Therefore, in conjunction with the belt contact force limitation, this notice proposes to eliminate manual or automatic devices that allow the introduction of slack in the belt webbing of an upper torso restraint. Comments are requested, however, concerning the belt contact force specified in this notice and whether the specified level is sufficient to eliminate the need for "comfort clips" or similar devices. Additionally, comments are requested concerning methods to preclude excessive slack if "comfort clips" or "window-shade devices" continue to be permitted by the standard. The agency is particularly interested in possible performance requirements or test procedures to measure and limit the amount of slack that can be introduced in the belt webbing by such devices.

Automatic Locking Retractors (Manual Belts)

Seat belts incorporating automatic locking retractors (ALR's) in the lap belt portion of the system have been identified as a major item of complaint by vehicle occupants because of the feature's discomfort and inconvenience. Many vehicle occupants report that belts incorporating the ALR's tighten excessively under normal driving conditions, making it necessary to unbuckle and fasten the lap belt to relieve pressure on the pelvis and abdomen. This discomfort causes many persons to stop using their belts.

Belt systems having ALR's have also been found very inconvenient to use, particularly if the ALR is incorporated as part of the latchplate assembly. During the process of putting the belt on, the occupant must extend the belt in a single continuous movement to a length sufficient to allow buckling. Otherwise, the retractor locks before sufficient webbing has been withdrawn to accomplish buckling, and the belt has to be fully retracted before the occupant can repeat the donning process. Many persons have found this characteristic of ALR's extremely irritating and consequently have avoided use of the belt. In addition, ALR's inhibit the driver's normal movement to pay tolls, reach the glove compartment, etc. With emergency locking retractors (ELR's) instead of automatic locking retractors, these problems would be alleviated.

Safety Standard No. 208 currently requires lap belts at outboard seating positions to be equipped with either automatic locking retractors or emergency locking retractors, in order to assure that belts are sufficiently tightened to be effective during a crash. However, this effectiveness feature can be achieved by ELR's without the concomitant discomfort and inconvenience associated with ALR's. Therefore, this notice proposes to eliminate ALR's as an alternative in the standard for front outboard designated seating positions.

While the agency believes that the comfort and convenience problems associated with automatic locking retractors apply equally to ALR's on belt assemblies in rear seating positions, other considerations have led to the tentative conclusion that the proposed requirement for emergency locking retractors should only apply to lap belts in front outboard designated seating positions. The primary reason for this conclusion is that automatic locking retractors are probably better suited for use with child restraint systems than emergency locking retractors. Since emergency locking retractors allow movement when the belt is fastened, the child restraint system could slide out of position prior to a crash if the retractor cannot be locked manually. Given the low usage rate of rear seats compared to front seats and considering the cost of installing emergency locking retractors equipped with manual locking devices in all rear seats, the agency has tentatively determined that the proposed requirement for emergency locking retractors should not apply to rear seats. Specific comment on this point is requested, however, particularly regarding the costs associated with installing emergency locking retractors in rear seats. If comments indicate that the agency's tentative conclusions are incorrect, emergency locking retractors could be required in rear seats also.

Additionally, even though emergency locking retractors can have manual locking devices, there is some concern that persons would be confused about use of the manual locks and would fail to secure the child restraints properly. Arguably, the same considerations apply if child restraints are used at the front outboard seating position. However, it is the agency's position that children should be placed in child restraints in the rear seats rather than in front seating positions since crash statistics indicate that the rear seat is a safer environment during a crash. This, coupled with the higher occupancy rate of front seating positions and the resulting need for comfortable belts in those positions, led to the conclusion that emergency locking retractors should be required on lap belt assemblies at front outboard seating positions. Since many people may use child restraints in the front passenger's position in spite of the fact that the rear seat is a safer location, the proposed requirement does include the specification that emergency locking retractors for the lap belt portion of the belt system at the front outboard passenger's position shall be equipped with a manual locking device. The actuating control for the manual locking device would be required to be readily accessible and brightly colored so that it could be easly found by potential users.

The agency seeks comments concerning the merits of its tentative decision to exclude rear seat belts from the emergency locking retractor requirements. Answers to the following specific questions are solicited:

(1) Are persons likely to understand how to secure child restraint systems with seat belt assemblies having ELR's with manual locking devices?

(2) What would be the cost of installing ELR's with manual locking devices in rear outboard seating positions?

(3) Do the costs of ELR's for rear seats and the possible problems with child restraints outweigh the benefits achievable by precluding ALR's, because of their associated discomfort?

B. Proposed Requirements To Improve the Convenience of Seat Belts

Clearance Between Webbing and Seat Cushion (Automatic Belts)

The shift from manual to automatic belts may initially lead to confusion on the part of some persons. Automatic belts differ from manual belts because these new belts automatically move into place around a person when he or she enters a car and sits in a front seating position and closes the door. With manual belts, the person has to use his hands to place the belt around himself and to attach or unlock the buckle. Some future automatic belt systems will likely consist of single diagonal upper torso belts and others will consist of combination automatic lap and shoulder belts. The automatic belt currently used in the Volkswagen Rabbit and some 1978/79 GM Chevettes is a single

diagonal belt. The lower end of the automatic shoulder belt is attached between the two front seating positions. The upper end is attached to the rear upper corner of the front door.

If the lap belt or torso belt of an automatic belt system is designed so that it lies against the seat cushion or seatback cushion(s) when the belt system is reeled-out in its open door position, people are often initially confused about how to get into the vehicle. These persons are not sure whether they are supposed to step over the webbing (the strap) or slide behind it. Also, some persons may have difficulty sliding behind the webbing elements (for example, the lap belt catches on the seat cushion or the torso belt has to be pushed forward out of the way). In getting out of the vehicle, some persons may experience difficulty by catching their knee on the lap belt webbing. All of these inconveniences could lead to disconnection of the automatic belt system, which poses a significant danger both for the person making the disconnection and for future riders who may fail to reconnect the belt.

In order to alleviate these problems, automatic belt systems should be designed to make it obvious to occupants how to enter the vehicle. One way to accomplish this is to design a system that has sufficient clearance between the belt webbing and seat cushions to create the visual impression that one can and should slide beneath the lap belts and behind the shoulder belts. Clearance is especially important at the outboard side (i.e., side nearest the closest door) of a seat cushion for people to perceive the proper method of entry. There are several possible methods to achieve this clearance, including: positioning of the anchorages so that webbing does not touch the seat cushion; using automatic devices to pull outboard ends of either lap or shoulder belt forward or away from the seat cushions; or providing a hook upon which either the lap or shoulder belt can manually be placed out of the occupant's way.

After considering the possible solutions to such clearance problems, the agency has tentatively determined that minimum specifications for clearance should be established and manufacturers should be allowed to achieve the clearance by any designs they choose. The proposed requirements, therefore, provide that neither the torso nor lap belt of automatic belt systems shall be any closer than 3 inches to the outboard edge of the seat cushion or the backrest cushion when the vehicle door is completely opened. This 3-inch specification is considered the minimum clearance necessary to facilitate a perception of the proper method of entering the vehicle, i.e., sliding behind and underneath the belts. The criterion is based on engineering judgment and agency assessment of the likely reactions of persons to unfamiliar automatic belt systems.

Under the proposed requirement, the clearance between belt webbing and cushions would have to be achieved automatically. Therefore, automatic devices to pull the webbing from the seat would be acceptable, but hooks (located on the A pillar, for example) requiring manual movement of the belt webbing would not be acceptable. Occupants might be confused concerning how to move the webbing to the hook so the initial problem would not be eliminated. These convenience hooks would be permitted, however, as additional devices if the webbing and seat cushion clearance is achieved by other means, provided the hook automatically releases the webbing so that it will deploy around the occupant prior to the vehicle being driven.

Latchplate Accessibility (Manual Belts)

One of the most inconvenient aspects of using many current seat belts designs is the difficulty that seated occupants have in reaching back to grasp the belt latchplate when the belt is unbuckled and in its retracted position (the portion of the assembly that fits into the buckle to fasten the assembly). The greater the difficulty in reaching the latchplate to buckle the belt, the more likely that belt usage will cease or never begin. Poor accessibility of latchplates results from two main factors: Location of the latchplate beyond the convenient reach of some seated vehicle occupants and inadequate clearance between the seats and side of the vehicle to allow easy grasping of the latchplate. Requirements are proposed in this notice to define limits on reach for latchplates and minimum clearances for arm and hand access.

The proposed distance requirements for reach of latch plates are based upon the reach capabilities of short vehicle occupants who tend to adjust their seats toward the forward end of the seat track and would, therefore, have greater problems in reaching a body mounted latchplate located behind the seat. The proposed requirements were developed from standard anthropomorphic data sources on various reach distance envelopes and from special NHTSA studies addressing the reach capability of short occupants. The specified criteria include the requirements for lower outboard reach, lower inboard reach and upper outboard reach (based on the locations in which belt latchplates and buckles might be found). Manufacturers would comply with the proposed requirements by locating belt anchorages within the prescribed reach distance envelopes (the dimensional parameters that are defined). Of course, manufacturers would also have to comply with the anchorage location requirements currently specified in Standard No. 210, *Seat Belt Assembly Anchorages* (49 CFR 571.210).

The proposed requirements for access of hands and arms to latchplates were developed primarily from anthropomorphic data, including *Human Factors for Designers of Naval Equipment* (74–14; General Reference). The proposal specifies a test block (3" x 4" x 12") device that represents the elbow-to-wrist distance and hand size of a 95th percentile male. The test block device must be capable of moving through the same space that a human hand and arm would have to move through in reaching the latchplate. The proposed requirement specifies that the latchplate must be located with sufficient clearance between the vehicle seat and vehicle structure to allow "unrestricted transit" of the test block to the latchplate. This means that the test block must be capable of moving to the latchplate without having to depress any surfaces that are contacted, i.e., without forcing or wedging of the test block. (Discussions concerning the development of both the proposed reach distance requirements and the latchplate accessiblity requirements have been placed in the NHTSA docket: 74–14, General Reference No. 227).

Seat Belt Guides (Manual Belts)

Several years ago, the agency granted a petition by the Center for Auto Safety to amend Standard No. 208 to require rear seat belts in taxi cabs to be easily accessible. The Center noted that belt webbing and buckles in taxi cabs are often pushed down behind the seat or are otherwise difficult or virtually impossible to locate the grasp, thereby dicouraging or actually precluding use of the belts. The petition also pointed out that belt that have been pushed behind the seat cushions are often dirty, another factor which discourages use. The agency agrees with the recommendation of the Center for Auto Safety, and has tentatively determined that the problem applies equally to all vehicles—not just taxi cabs. Therefore, this proposal would require belt webbing at any designated seating position to pass through flexible

stiffeners or other guides in the seat cushion (to ensure that the belts are easily accessible to occupants) if the webbing passes through or between the seat cushion(s). Belt buckles and latchplates would be required to remain above the rear cushions at all times (i.e., by some device which would preclude the hardware from falling down behind the seat), even in folding seats.

Motorized Track Systems (Automatic Belts)

(a) Webbing/Head Clearance. Some automatic belt designs rely on overhead, motorized track-puller systems instead of the opening of the door to move the webbing automatically out of the occupant's way when getting in and out of the vehicle. These systems pull the webbing toward the dash board when the vehicle door is opened and then pull it toward the rear of the vehicle to deploy around the occupant after the door is closed. If such a system is used, the vehicle design must be such that the belt webbing does not pass too close to the occupant's head during its motion. Webbing that passes extremely close to or brushes the occupant's face or head could be annoying or disconcerting (preceived as hazardous by the intended user) and cause the occupant to defeat the automatic belt system (by unbuckling or cutting the belt, for example). The proposed requirements specify a webbing/head clearance envelope that is intended to ensure that the occupant's head is not touched by an articulating torso belt when the occupant is sitting in the nominal riding position. This clearance envelope includes space for the occupant's head to turn 90 degrees toward the outboard side of the vehicle without having belt contact. The agency has tentatively determined that the proposed requirements should ensure that a motorized torso belt moving along its track would not contact over 90 percent of vehicle occupants and would also give them sufficient "psychological space".

(b) Rate of Movement of Motorized Belts. The agency believes that motorized belt systems will be unacceptable to the public if the rate of belt movement is too slow, since the occupant would be delayed in exiting the vehicle. Systems that move too rapidly might also be unacceptable, since they could be viewed as a possible hazard, even though they were not. Either of these performance characteristics could lead vehicle occupants to defeat the automatic belts. Therefore, this notice proposes a minimum and maximum rate that belts may move forward and backward on motorized track systems. NHTSA supported research indicates that a rate between 1.5 and 1.9 seconds from start to stop is an acceptable rate for moving the belt toward the dash and moving the belt back around the occupant). Although this rate was established from studies involving only torso belts, both lap and torso belts in the same system would necessarily have to move at the same rate for the convenience of vehicle occupant.

Seat Belt Warning Systems (Manual and Automatic Belts)

Safety Standard No. 208 currently requires a visual and audible warning system to remind vehicle occupants to fasten their manual safety belts. The present standard requires a warning system which activates, for a period of 4 to 8 seconds, a reminder light each time the vehicle ignition is operated, and an audible warning if the driver's lap belt is not in use. As noted in the 1976 ANPRM, studies of manual seat belt usage in passenger vehicles have shown that a sequential logic system which incorporates a visible reminder light of continuous duration and a 4- to 8-second audible warning could produce usage rates significantly greater than those obtained with the warning systems currently required. The sequential logic warning system activates unless buckling of a person's belt occurred after the person sat down in his seat. Under the current 208 requirement, the warning system can be permanently defeated if the belt is buckled and pushed behind the seat cushion and left there during subsequent occcasions on which the vehicle is used.

This notice proposes to require sequential warning systems. As specified in the proposed rule, these requirements would only apply to belts installed in vehicles other than passenger cars. The agency is considering, however, requiring the sequential warning system for manual lap belts installed in conjunction with air bags on passenger cars and for automatic belts in passenger cars. If an automatic belt has been disconnected by a previous passenger, the sequential warning system would alert a subsequent occupant to refasten the belt, just as in manual belt vehicles. Therefore, specific comment regarding the advisability of requiring sequential logic warning systems for these vehicles is also solicited.

This notice proposes an additional change in the warning systems requirements for automatic belts to ensure that motorized systems are locked into place before the vehicle begins moving. If for some reason the motorized belt has not returned and locked into its protective mode, the occupant would be alerted by the continuous light and by a 4- to 8-second audible warning. The agency's analysis has determined that the requirements proposed in this notice would in no way degrade the performance or effectiveness of belt systems. Belt systems can be designed so that they are not only effective but also comfortable to wear and convenient to use.

Finally, this notice also proposes to change the words "passive belts" to "automatic belts" wherever they appear in the standard. The agency has concluded that the word "automatic" more accurately describes the fact that no action is required by vehicle occupants to obtain protection, than the word "passive".

The requirements and procedures proposed in this notice may be altered in any rule that might be forthcoming, in response to comments and further agency analysis.

The engineer and lawyer primarily responsible for the development of this notice are Robert Nelson and Hugh Oates, respectively.

Interested persons are invited to submit comments on the proposal. It is requested but not required that 10 copies be submitted.

All comments must be limited not to exceed 15 pages in length. Necessary attachments may be appended to these submissions without regard to the 15 page limit. This limitation is intended to encourage commenters to detail their primary arguments in a concise fashion.

If a commenter wishes to submit certain information under a claim of confidentiality, three copies of the complete submission, including purportedly confidential information, should be submitted to the Chief Counsel, NHTSA, at the street address given above, and seven copies from which the purportedly confidential information has been deleted should be submitted to the Docket Section. Any claim of confidentiality must be supported by a statement demonstrating that the information falls within 5 U.S.C. section 552(b)(4), and that disclosure of the information is likely to result in substantial competitive damage; specifying the period during which the information must be withheld to avoid that damage; and showing that earlier disclosure would result in that damage. In addition, the commenter or, in the case of a corporation, a responsible corporate official authorized to speak for the corporation must certify in writing that each item for which confidential treatment is requested is in

fact confidential within the meaning of section 552(b)(4) and that a diligent search has been conducted by the commenter or its employees to assure that none of the specified items has previously been disclosed or otherwise become available to the public.

All comments received before the close of business on the comment closing date indicated above will be considered, and will be available for examination in the docket at the above address both before and after that date. To the extent possible, comments filed after the closing date will also be considered. However, the rulemaking action may proceed at any time after that date, and comments received after the closing date and too late for consideration in regard to the action will be treated as suggestions for future rulemaking. The NHTSA will continue to file relevant material as it becomes available in the docket after the closing date, and it is recommended that interested persons continue to examine the docket for new material.

Those persons desiring to be notified upon receipt of their comments in the rules docket should enclose, in the envelope with their comments, a self addressed stamped postcard. Upon receiving the comments, the docket supervisor will return the postcard by mail.

In consideration of the foregoing, it is proposed that Safety Standard No. 208, *Occupant Crash Protection* (49 CFR 571.208), be amended as follows:

1. In section S7.1, new paragraphs, "S7.1.1.3", and "S7.1.1.4", and "S7.1.1.5" would be added to read:

S7.1.1.3 A lap belt installed at any front outboard designated seating position in a vehicle manufactured on or after September 1, 1981, shall meet the requirements of this section by means of an emergency-locking retractor that conforms to Standard No. 209.

S7.1.1.4 An upper torso restraint installed at any front outboard designated seating position in vehicles manufactured on or after September 1, 1981, shall adjust by means of an emergency-locking retractor that conforms to Standard No. 209 to fit and remain within the belt crossing envelope of an anthropomorphic test device as specified in S10.6, with the seat located in the mid-position and the seat back in the manufacturer's normal designed riding position. However, this paragraph shall not apply to manual Type-2 belts installed in front seating positions in passenger cars.

S7.1.1.5 Emergency-locking retractors for adjusting the lap portion of belt systems installed at front outboard passenger's seating positions on vehicles manufactured on or after September 1, 1981, shall also have a manual locking device. The actuating control for this manual locking device shall be readily accessible and brightly colored. However, this paragraph shall not apply to manual Type-2 belts installed in front seating positions in passenger cars. Notwithstanding the other provisions of S7.1–S7.1.1.5, emergency-locking retractors on belt assemblies located in positions other than front outboard designated seating positions may be equipped with a manual webbing adjustment device capable of causing the retractor that adjusts the lap belt to lock when the belt is buckled.

2. A new section, "S7.4" would be added to read as follows:

S7.4 *Seat belt comfort and convenience.* (a) Automatic seat belts installed in any vehicle with a GVWR of 10,000 pounds or less manufactured on or after September 1, 1981, shall meet the requirements of S7.4.1 through S7.4.6.

(b) Manual seat belts, other than manual Type 2 belts in front seating positions in passenger cars, installed in any vehicle with a GVWR of 10,000 pounds or less manufactured on or after September 1, 1981, shall meet the requirements of S7.4.5 through S7.4.9.

S7.4.1 When the driver's seat is adjusted to its forwardmost position on the seat track and the front door on the driver's side of the vehicle is opened 60 degrees or to the fullest extent possible, whichever is less, any lap belt or torso belt webbing for that seat shall be at least three inches from:

(a) Any point on the line defined by the intersection of the horizontal plane that is tangent to the highest point on the cushion (undepressed) of the driver's seat and vertical longitudinal plane that is tangent to the outermost point on the driver's seat, and

(b) Any point on the line defined by the intersection of (1) the transverse plane that is parallel to the seat back angle when the driver's seat back is adjusted to its most vertical position and that is tangent to the forwardmost seat back surface contactable by that plane and (2) the vertical longitudinal plane that is tangent to the outermost point of the driver's seat back cushion. Seat back angle is determined in accordance with the procedures for determining back angle (L40) in SAE J1100a.

S7.4.2 A motorized deployment and retraction system that is provided for either lap or upper torso belts shall move in not more than 1.9 seconds and not less than 1.5 seconds—

(a) From the completely deployed position to the completely retracted position.

(b) From the completely retracted position to the completely deployed position.

S7.4.3 During the deployment or retraction of a belt system that deploys and retracts by motorized means, no part of the belt webbing or hardware shall pass through a spherical zone whose diameter is 17 inches and whose center is the tip of the nose of an anthropomorphic test dummy (Figure 6) positioned in accordance with S8.1.11 in the seating position for which that belt system is provided.

S7.4.4 Any manual convenience hook or other device that is provided to stow seat belt webbing to facilitate entering and exiting the vehicle shall automatically release the webbing when—

(a) The vehicle ignition switch is moved to the "on" or "start" position, and shall remain in the release mode as long as the switch remains in that position.

(b) The vehicle's drive train is engaged, and shall remain in the release mode as long as the drive train is engaged.

S7.4.5 No seat belt system shall have either manual or automatic devices that permit the introduction of slack in the webbing of the upper torso restraint (e.g., "comfort clips" or "window-shade devices").

S7.4.6 *Belt Contact Force.* The upper torso webbing of any seat belt assembly shall not exert more than 0.7 pounds of contact force when measured normal to and one inch from the chest of an anthropomorphic test dummy, positioned in accordance with S8.1.11 in the seating position for which that assembly is provided, at the point where the torso belt crosses the midsagittal line on the dummy's chest.

S7.4.7 *Latchplate Access.* The latchplate of any seat belt assembly shall be located within the outboard reach envelope of either the outboard arm or the inboard arm described in S10.5 and Figure 3 of this standard. There shall be sufficient clearance between the vehicle seat and the side of the vehicle interior to allow unhindered transit of the test block defined in Figure 5 of this standard to the latchplate or buckle.

S7.4.8 *Retraction.* With anthropomorphic test dummies positioned in the front outboard designated seating positions in accordance with S8.1.11, and restrained by the belt systems for those positions, the torso and lap belt webbing of any of those seat belt systems shall

automatically retract to their completely stowed position when the latchplate is released from the buckle.

S7.4.9 *Seat belt guides and hardware.*

S7.4.9.1 The webbing of a manual seat belt assembly that is designed to pass through the seat cushion or between the seat cushion and seat back shall pass either through guide openings in the surface of the seat cushion or through flexible conduits between the seat cushion and seat back to maintain the location of the seat belt latchplate and buckle in fixed positions in relation to the seat cushion and vehicle interior. The inboard buckle or receptacle end of any seat belt assembly installed at the front outboard designated seating positions shall be "free-standing" to allow one-handed buckling.

S7.4.9.2 If the buckle and latchplate of a manual seat belt assembly installed at any designated seating position are designed to be on top of the seat cushion, they shall not pass through the guides or conduits provided for in S7.4.9.1 and fall behind the seat when the events listed below occur in the order specified: (a) the belt is completely retracted or when the belt is unlatched, if the belt is nonretractable; (b) the seat is moved to any position to which it is designed to be adjusted; and (c) the seat back, if foldable, is folded forward as far as possible and then moved backward into place. The inboard receptacle end of a seat belt assembly installed at a front outboard designated seating position shall be accessible with the center arm rest in any position to which it can be adjusted (without having to move the armrest).

3. S4.5.3(b) would be amended to delete the parenthetical number "(1)" (since there is no numeral "2" in this paragraph); to change the phrase in the first sentence, "at the front designated seating position", to "at the left front outboard designated seating positions"; to change the phrase, "with condition (B)", in the last sentence to read "with either condition (B) or condition (C)"; and to add a new subparagraph "(C)" to read as follows:

(C) The belt webbing of a motorized automatic belt system is not in its locked, protective mode at the anchorage point.

4. A new section S7.3a would be added after existing section S7.3 to read as follows:

S7.3a Any manual seat belt assembly provided at a front outboard designated seating position in vehicles, other than passenger cars, with a GVWR of 10,000 pounds or less manufactured on or after September 1, 1981, shall meet the requirements of S7.3a.1 and S7.3a.2.

S7.3a.1 The seat belt assembly shall be equipped with a sequential warning system that activates:

(a) A continuous or intermittent audible signal for a period of not less than 4 seconds and not more than 8 seconds (beginning when the vehicle ignition switch is moved to the "on" or "start" position or when the vehicle's engine is operating and the transmission gear selector is moved to any forward position) when condition (A) exists simultaneously with either condition (B) or (C); and

(b) A continuous warning light, visible to the driver, displaying the words "Fasten Seat Belts" or "Fasten Belts" for as long as condition (A) exists simultaneous with either condition (B) or (C).

(A) The vehicle's ignition switch is moved to the "on" position or the "start" position, or the vehicle's engine is operating and the transmission gear selector is moved to any forward position.

(B) The driver's lap belt is not in use, as determined, at the option of the manufacturer, by either the belt latch mechanism not being fastened, or by the belt not being extended at least 4 inches from its stowed position.

(C) A person of at least the weight of a 5th percentile adult female is seated with the belt fastened at the driver's position, and a person of at least the weight of a 50th percentile 6-year-old child is seated in the right front designated seating position and the lap belt for that position is not in use, as determined, at the option of the manufacturer, either by the belt latch mechanism not being fastened or by the belt not being extended at least 4 inches from its stowed position.

S7.3a.2 Notwithstanding the other provisions of S7.3a, the warning system shall activate whenever the ignition switch is in the "on" or "start" position and condition (A) or (B) below exists and the operation of the belt system at each occupied designated seating position has not been performed after the occupant is seated. "Belt operation" for the purpose of this requirement shall be, at the option of the manufacturer, either the fastening of the belt latch mechanisms or the extension of the belt at least 4 inches from its stowed position.

(A) A person of at least the weight of a 5th percentile adult female is seated at the driver's seating position.

(B) A person of at least the weight of a 5th percentile adult female is seated at the driver's designated seating position and a person of at least the weight of a 50th-percentile 6-year-old child is seated at the right front designated seating position.

5. A new paragraph S10.5 would be added to read as follows:

S10.5 The reach envelopes specified in S7.4.7 are obtained by positioning an anthropomorphic test dummy in the driver's seat or passenger's seat in its forwardmost adjustment position. Attach the lines for the inboard and outboard arms to the test dummy as described in Figure 4 of this standard. Extend each line backward and outboard to generate the compliance [arcs] of the outboard reach envelopes of the test dummy's arms as shown in Figure 3 of this standard.

6. A new paragraph S10.6 would be added to read as follows:

S10.6 To determine compliance with S7.1.1.4 of this standard, position the anthropomorphic test device in a front outboard designated seating position in accordance with S8.1.11. The test device shall have a form-fitting torso garment as specified in S8.1.9. Generate the belt crossing envelope described in Figure 7 of this standard on the test device, and:

(a) Fasten the belt system around the test device.

(b) Adjust the belt webbing so that it lies within the compliance envelope.

(c) Rock the anthropomorphic test device laterally and fore and aft 30 degrees for at least 3 cycles.

(d) Return the test dummy to its original vertical seating position.

(e) Determine if the webbing is still within the compliance envelope.

7. The term "passive belt(s)" would be amended to read "automatic belt(s)", wherever it appears in the standard.

8. S8.1.8 would be amended to read as follows: "Anthropomorphic test devices used for the evaluation of restraint systems manufactured pursuant to applicable portions of sections S4.1.2 and S4.1.3 shall conform to the requirements of Subpart B of Part 572 of this title for a 50th percentile adult male dummy.

9. The weights and dimensions of the vehicle occupants referred to in this standard and specified in S7.1.3 would be modified to read as follows:

BILLING CODE 4910-59-M

	50th percentile 6-year-old child	5th percentile adult female	50th percentile adult male	95th percentile adult male
Weight	47.3 pounds	102 pounds	164 pounds	215 pounds
Erect sitting height	25.4 inches	30.9 inches	35.7 inches	38 inches
Hip breadth (sitting)	8.4 inches	12.8 inches	14.5 inches	16.5 inches
Hip circumference (sitting)	23.9 inches	36.4 inches	42 inches	47.2 inches
Waist circumference (sitting)	20.8 inches	23.6 inches	33 inches	42.5 inches
Chest depth		7.5 inches	9 inches	10.5 inches
Chest circumference:				
(nipple)		30.5 inches		
(upper)		29.8 inches	37.7 inches	44.5 inches
(lower)		26.6 inches		

For 50th percentile adult male change:

Weight	164 pounds to 164 + 3
Hip breadth (sitting)	14.5 inches to 14.7
Waist circumference	33 inches to 32.0
Chest depth	9 inches to 9.3
Chest circumference	37.7 inches to 37.4

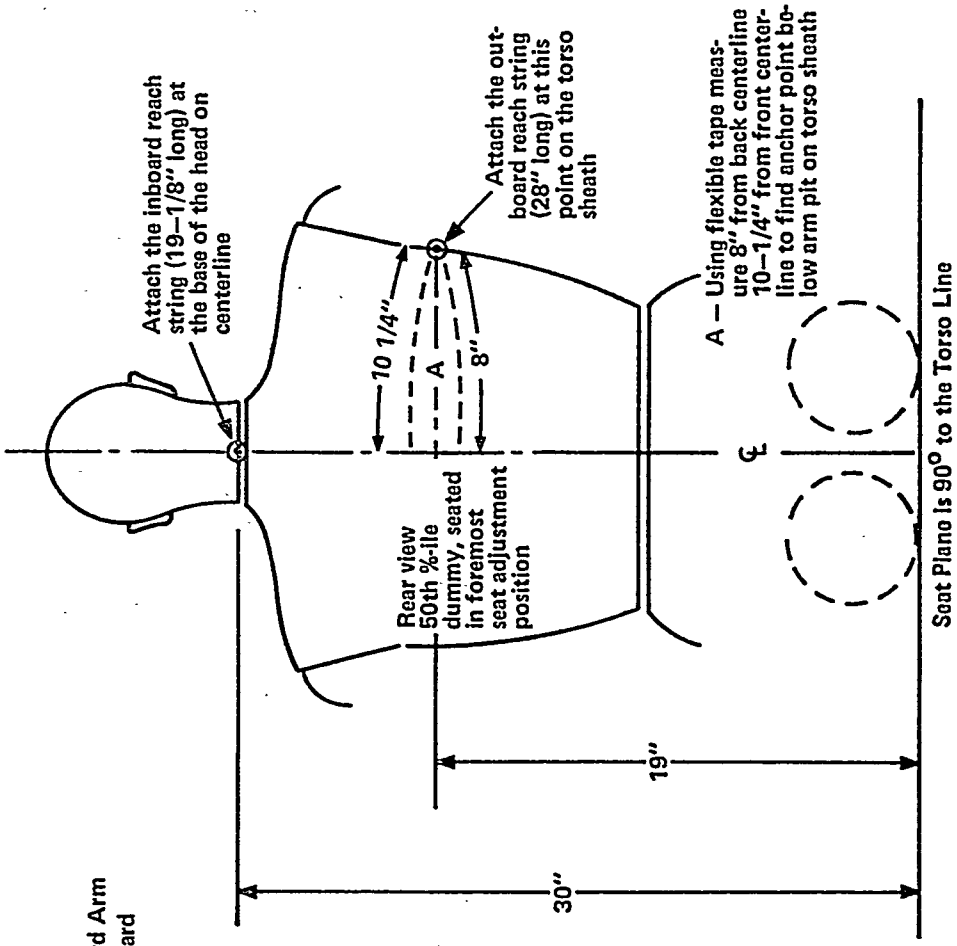

Figure 4 — Location of Anchoring Points for Latchplate Reach Limiting Chains or Strings to Test for Latchplate Accessibility

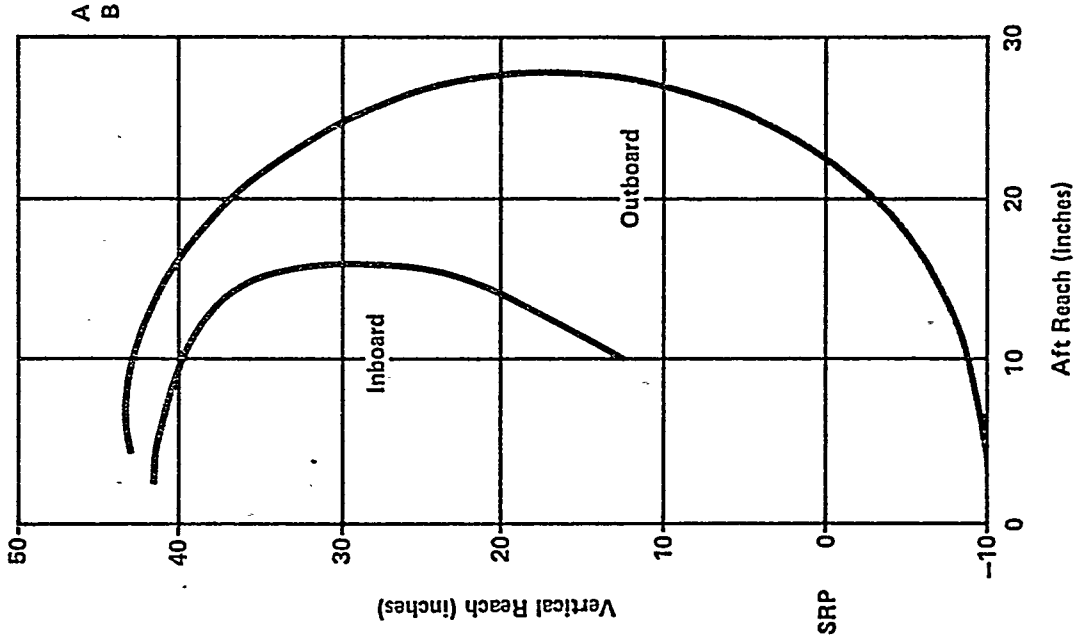

Figure 3 — Reach Envelopes

A = Clearance Measurement Reference (tip of nose)

B = Typical belt pattern

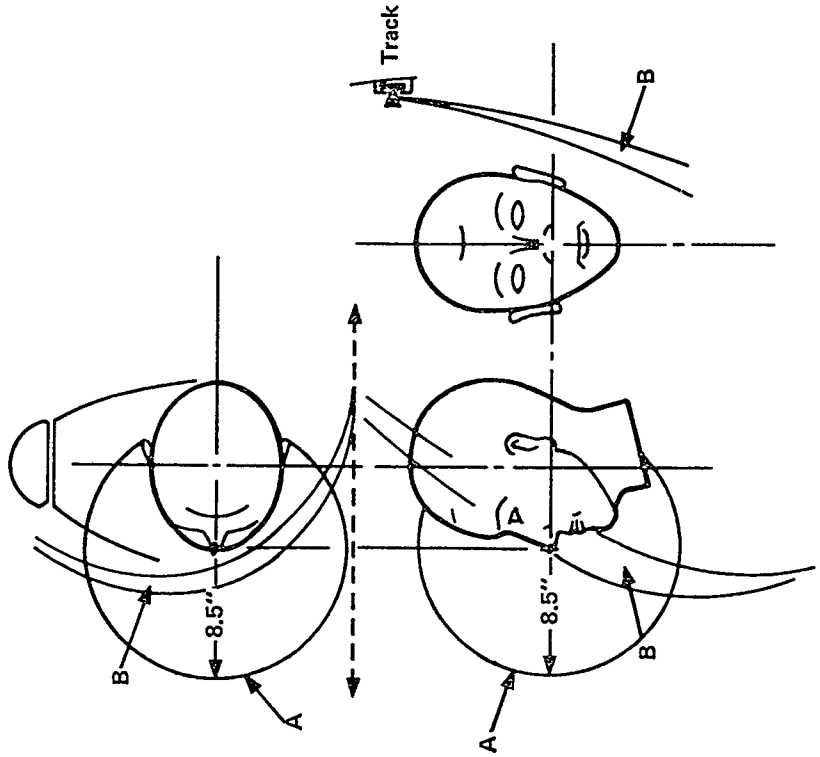

Figure 6 — Head Clearance Measurement

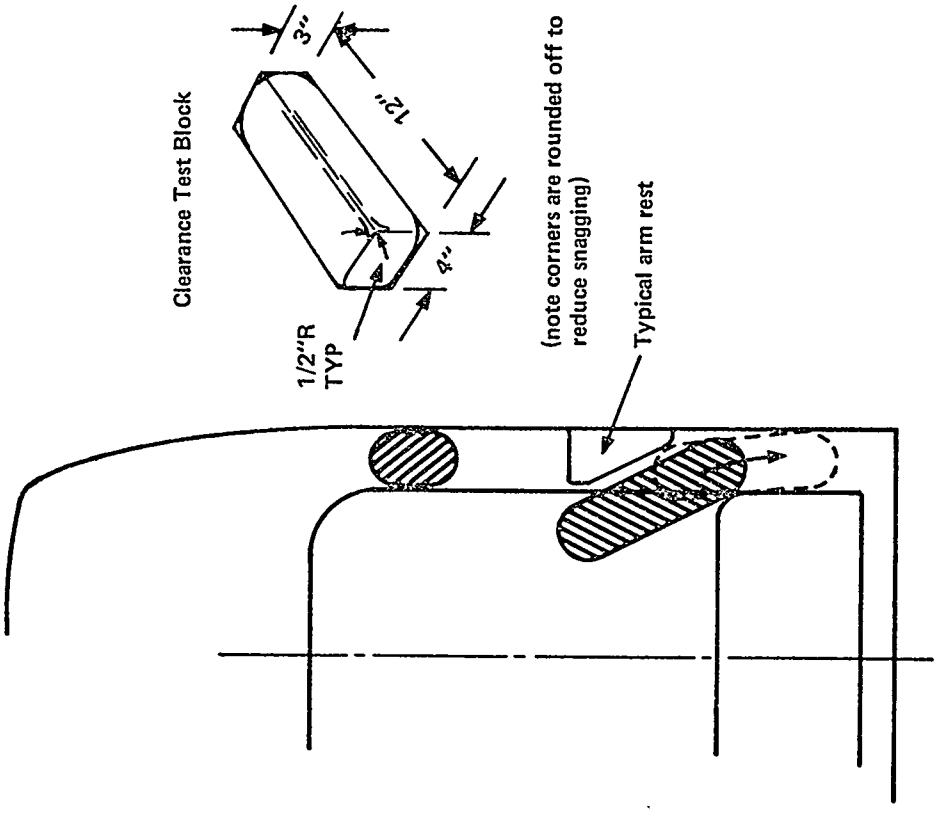

Figure 5 — Use of Clearance Test Block to Determine Hand/Arm Access

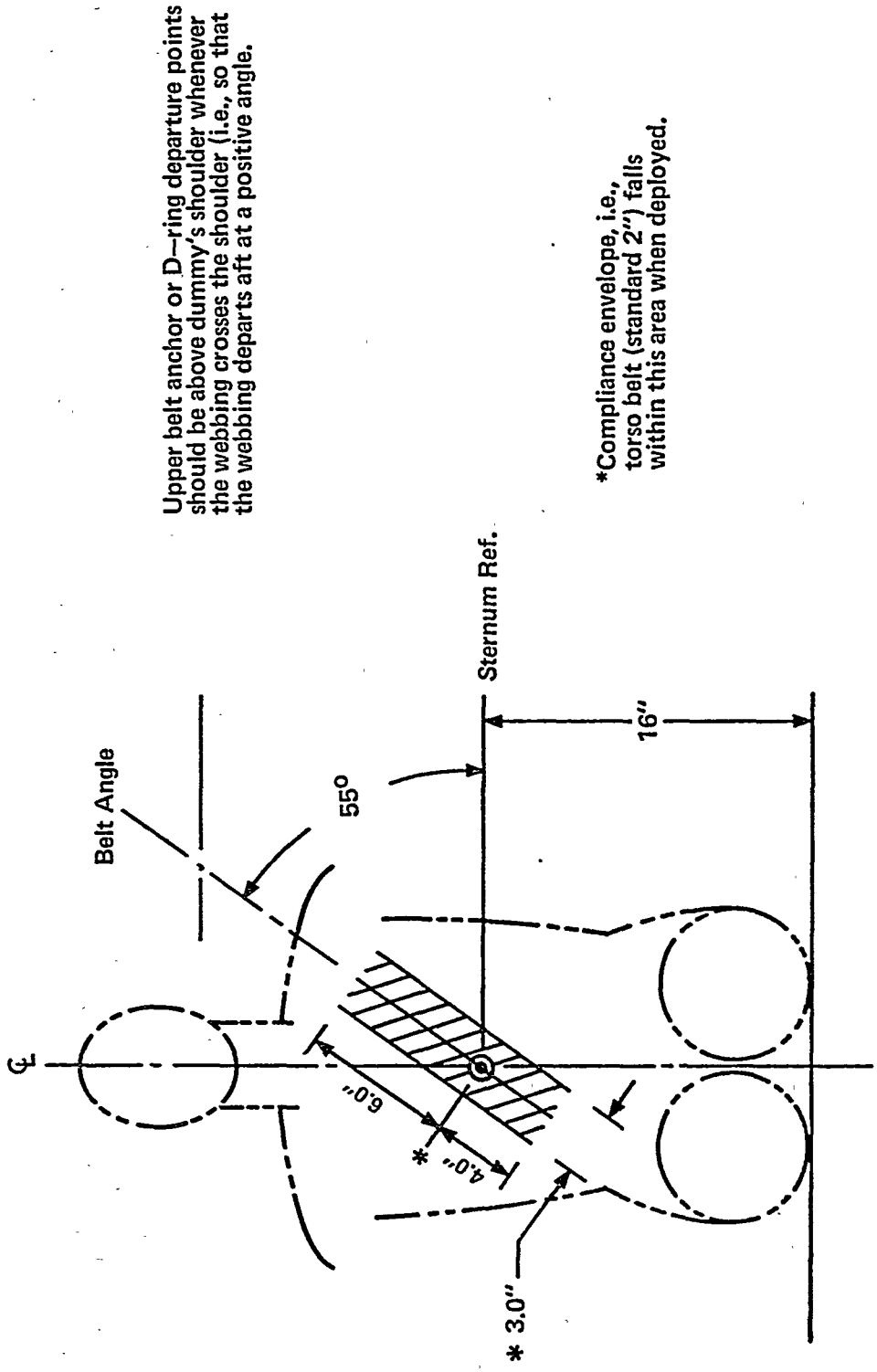

Figure 7 — Belt-Crossing Geometric Criteria Using 50th %ile Dummy

BILLING CODE 4910-59-C

(Secs. 103, 119, Pub. L. 89-593; 80 Stat. 718 (15 U.S.C. 1392, 1407); delegation of authority at 1.50).

Issued on December 20, 1979.

Michael M. Finkelstein,

Associate Administrator for Rulemaking.

[FR Doc. 79-39618 Filed 12-28-79; 8:45 am]

BILLING CODE 4910-59-M

---

49 CFR Part 571

[Docket No. 79-19; Notice 1]

Motor Vehicle Safety Standards, Rearview Mirrors

AGENCY: National Highway Traffic Safety Administration (NHTSA).

ACTION: Notice of Proposed Rulemaking.

SUMMARY: This notice proposes an amendment to Standard No. 111-76, *Rearview Mirrors,* to require light trucks and vans with rear windows to be equipped with an inside rearview mirror. At present, the standard allows manufacturers of these vehicles to equip them either with an inside rearview mirror and outside mirrors identical to those found on passenger cars or with no inside mirror and a large outside rearview mirror on each side of the vehicle. This notice supplements the agency's September 27, 1979, proposal to require the glazing in rear windows of light trucks and vans to transmit sufficient light for adequate driving visibility (44 FR 55610). The effect of these two proposals is to ensure that drivers of light trucks and vans will be afforded improved rearward visibility.

DATES: Comments must be received no later than February 14, 1980. The proposed effective date: upon publication of final rule.

ADDRESSES: Comments should refer to the docket and notice numbers and be submitted to: Docket Section, Room 5108, National Highway Traffic Safety Administration, 400 Seventh Street, N.W., Washington, D.C. 20590.

FOR FURTHER INFORMATION CONTACT: W. Marx Elliott, Office of Vehicle Safety Standards, National Highway Traffic Safety Administration, 400 Seventh Street, N.W., Washington, D.C. 20590 (202-426-2720).

SUPPLEMENTARY INFORMATION: Federal Motor Vehicle Safety Standard No. 111-76, *Rearview Mirrors,* currently allows the manufacturers of multipurpose passenger vehicles (MPV's), trucks and buses, other than schoolbuses, with a gross vehicle weight rating (GVWR) of 10,000 pounds or less the option of complying with one of two rearward visibility requirements. A manufacturer may equip those vehicles either with an inside rearview mirror and outside mirrors which both have to meet the same requirements as mirrors required in passenger cars, or it may equip the vehicle with larger outside mirrors on each side of the vehicle and forego providing any inside mirror. Under the latter alternative, the outside mirrors must be plane mirrors and have not less than 19.5 square inches of reflective surface.

This notice proposes an amendment to the standard which would require manufacturers of light trucks, MPV's, and buses other than school buses that are requipped with rear windows to install an inside rearview mirror in those vehicles that is similar to the mirror found in passenger cars. As with passenger car mirrors, the inside mirrors would have to breakaway, deflect or collapse when subjected to a force of 90 pounds in order to reduce injuries to occupants striking the mirror in a crash.

In recent years, light trucks, buses and MPV's have increasingly been used as passenger carrying vehicles. This increased usage has been accompanied by a corresponding rise in occupant deaths in those vehicles. As a part of its effort to upgrade the overall safety of those vehicles, NHTSA proposed, on September 27, 1979, an amendment to Standard No. 205, *Glazing Materials,* to require the rear windows in light trucks, buses and MPV's to transmit sufficient light to afford the driver adequate visibility (44 FR 55610). The amendment proposed in this notice is an important supplement to the proposed amendment to Standard No. 205. It will enable drivers to take full advantage of the more light transmittant glazing materials to monitor traffic and safety make lane changes and backup the vehicle.

The agency has assessed the economic and other impacts of this proposal and determined that they are not significant within the meaning of Executive Order 12044 and the Department of Transportation's policies and procedures for implementing that order. Based on that assessment, the agency has concluded that the economic and other consequences of this proposal are so minimal that a requlatory evaluation is not necessary. The impact is minimal since almost all current light trucks, buses and MPV's with a rear window already are equipped with an inside rearview mirror. NHSTA estimates that the average cost of complying with the standard in the remaining vehicles is less than $2.00 per vehicle.

Interested persons are invited to submit comments on the proposal. It is requested but not required that 10 copies be submitted.

All comments must be limited not to exceed 15 pages in length. Necessary attachments may be appended to these submissions without regard to the 15 page limit. This limitation is intended to encourage commenters to detail their primary arguments in a succinct and concise fashion.

If a commenter wishes to submit certain information under a claim of confidentiality, three copies of the complete submission, including purportedly confidential information, should be submitted to the Chief Counsel, NHTSA, at the street address given above, and seven copies from which the purportedly confidential information has been deleted should be submitted to the Docket Section. Any claim of confidentiality must be supported by a statement demonstrating that the information falls within 5 U.S.C. section 552(b)(4), and that disclosure of the information is likely to result in substantial competitive damage; specifying the period during which the information must be withheld to avoid that damage; and showing that earlier disclosure would result in that damage. In addition, the commenter or, in the case of a corporation, a responsible corporate official authorized to speak for the corporation must certify in writing that each item for which confidential treatment is requested is in fact confidential within the meaning of section 552(b)(4) and that a diligent search has been conducted by the commenters or its employees to assure that none of the specific items has previously been disclosed or otherwise become available to the public.

All comments received before the close of business on the comment closing date indicated above will be considered, and will be available for examination in the docket at the above address both before and after the date. To the extent possible, comments filed after the closing date will be also be considered. However, the rulemaking action may proceed at any time after that date, and comments received after the closing date and too late for consideration in regard to the action will be treated as suggestions for further rulemaking. The NHTSA will continue to file relevant material as it becomes available in the docket after the closing date, and it is recommended that interested persons continue to examine the docket for new material.

Those persons desiring to be notified upon receipt of their comments in the rules docket should enclose, in the envelope with their comments, a self addressed stamped postcard. Upon receiving the comments, the docket

supervisor will return the postcard by mail.

The engineer and lawyer primarily responsible for this notice are W. Marx Elliott and Stephen L. Oesch.

In consideration of the foregoing, it is proposed that Standard No. 111–76 (49 CFR 571.111–76) be amended to read as set forth below.

1. Section S6.1 is amended to read as follows:

S6.1 Each multipurpose passenger vehicle, truck and bus, other than a school bus, with a GVWR of 10,000 pounds or less and with no windows at the rear-most end of the vehicle shall have outside mirrors of unit magnification, each with not less than 19.5 in^2 of reflective surface, installed with stable supports on both sides of the vehicle, located so as to provide the driver a view to the rear along both sides of the vehicle and adjustable in both the horizontal and veritical directions to view the rearward scene.

2. A new section S6.2 would be added to read:

S6.2 Each multipurpose passenger vehicle, truck and bus, other than a school bus, with a GVWR of 10,000 pounds or less and with one or more widows at the rear end of the vehicle shall have either—

(a) Mirrors that conform to the requirements of S5; or

(b) An inside mirror that provides a field of view through the full horizontal width of the rear widow. The mounting for the inside mirror shall comply with section S5.1.2. The vehicle shall also have outside mirrors of unit magnification, each with not less than 19.5 in^2 of reflective surface, installed with stable supports on both sides of the vehicle, located so as to provide the driver a view to the rear along both sides of the vehicle and adjustable in both the horizontal and vertical direction to view the rearward scene.

(Sec. 103, 119, Pub. L. 89–563, 80 Stat. 718 (15 U.S.C. 1392, 1407); delegations of authority at 49 CFR 1.50 and 49 CFR 501.8)

Issued on December 20, 1979.

Michael M. Finkelstein,

Associate Administrator for Rulemaking.

[FR Doc. 79–39517 Filed 12–28–79; 8:45 am]

BILLING CODE 4910–59–M

Notices

Federal Register
Vol. 44, No. 251
Monday, December 31, 1979

This section of the FEDERAL REGISTER contains documents other than rules or proposed rules that are applicable to the public. Notices of hearings and investigations, committee meetings, agency decisions and rulings, delegations of authority, filing of petitions and applications and agency statements of organization and functions are examples of documents appearing in this section.

DEPARTMENT OF AGRICULTURE

Farmers Home Administration

Program Regulations, Administrative Notices, and Forms; Mailing List

AGENCY: Farmers Home Administration, USDA.

ACTION: Notice.

SUMMARY: The Farmers Home Administration (FmHA) has established a mailing list for program regulations, Administrative Notices, and forms. The list has been established as a result of inquiries from interested individuals and groups. The intended effect is to make FmHA program regulations, Administrative Notices, and forms more readily available.

FOR FURTHER INFORMATION CONTACT: Mr. Joseph H. Linsley, Chief, Directives Management Branch, USDA, FmHA, Washington, D.C. 20250, Phone: (202) 447-4057.

SUPPLEMENTARY INFORMATION: On September 12, 1978, FmHA published a Notice in the Federal Register (43 FR 40542) indicating that a mailing list had been established. FmHA is still offering its mailing list services to interested individuals and organizations.

The charges established are as follows:

1. $250.00 for the complete set of program regulations, Administrative Notices, and forms.
2. $40.00/yr. for public and nonprofit organizations to receive new regulations and forms, amendments to existing regulations and forms, and new Administrative Notices. This charge is for a calendar year or any part thereof.
3. $75,00/yr. for individuals and groups other than public and nonprofit organizations to receive new regulations and forms, amendments to existing regulations and forms, and new Administrative Notices. This charge is for a calendar year or any part thereof.

To receive mailing list services, please notify the Director, Finance Office, 1520 Market Street, St. Louis, Mo. 63103, Attention: RCMS, in writing. The letter should indicate the complete mailing address (including ZIP code) to which you wish the material sent. A check, bank draft, or money order for the full amount for the services desired made payable to the "Treasury of the United States" should accompany the request. Public and nonprofit organizations should include evidence of their status to qualify for the $40.00 annual charge. Please allow a minimum of 3 weeks for delivery.

To remain on the list after the initial subscription, please send the full payment for the next year's services to the above address not later than December 20.

One time requests for a copy of a specific regulation, Administrative Notice, or form should be directed to our Freedom of Information Officer, Mr. James Bryan, USDA, FmHA, 14th Street and Independence Avenue, S.W., Washington, D.C. 20250, telephone 202-447-2211. Charges for these requests will be based upon the Department of Agriculture's fee schedule (7 CFR 1.1 *et seq.* Appendix A).

Dated: December 18, 1979.

James E. Thornton,

Associate Administrator, Farmers Home Administration.

[FR Doc. 79-39769 Filed 12-28-79; 8:45 am]

BILLING CODE 3410-07-M

Forest Service

Humboldt National Forest Grazing Advisory Board; Meeting

The Humboldt National Forest Grazing Advisory Board will meet on January 30, 1980 at 10:00 A.M. PST, at the Supervisor's Office, 976 Mountain City Highway, Elko, Nevada.

The meeting is open to the public.

The purpose of the meeting is to discuss:

1. Allotment Management planning.
2. Utilization of Range Betterment Fund.

Dated: December 10, 1979.

John A. Hafterson,

Acting Forest Supervisor.

[FR Doc. 79-39672 Filed 12-28-79; 8:45 am]

BILLING CODE 3410-11-M

Office of the Secretary

Section 22 Import Fees; Determination of Quarterly Import Fees On Sugar

AGENCY: Office of the Secretary.

ACTION: Notice.

SUMMARY: Headnote 4(c) of Part 3 of the Appendix to the Tariff Schedules of the United States (TSUS) requires the Secretary of Agriculture to determine on a quarterly basis the amount of the fees which shall be imposed on imports of raw and refined sugar (TSUS items 956.05, 956.15, and 957.15) under the authority of Section 22 of the Agricultural Adjustment Act of 1933, as amended. This notice announces those determinations for the first calendar quarter of 1980.

EFFECTIVE DATE: JANUARY 1, 1980.

FOR FURTHER INFORMATION CONTACT: William F. Doering, Foreign Agricultural Service, Department of Agriculture, Washington, D.C. 20250 (202-447-6723).

SUPPLEMENTARY INFORMATION: By Presidential Proclamation No. 4631, dated December 28, 1978, Headnote 4 Part 3 of the TSUS was amended to provide that quarterly adjusted fees shall be imposed on imports of raw and refined sugar (TSUS items 956.05, 956.15, and 957.15). Paragraph (c)(ii) of Headnote 4 provides that the quarterly adjusted fee for item 956.15 shall be the amount by which the average of the daily spot (world) price quotations for raw sugar for the 20 consecutive market days immediately preceding the 20th day of the month preceding the calendar quarter during which the fee shall be applicable (as reported by the New York Coffee and Sugar Exchange or, if such quotations are not being reported, by the International Sugar Organization), expressed in United States cents per pound, Caribbean ports, in bulk, adjusted to a United States delivered basis by adding the applicable duty and 0.90 cents per pound to cover attributed costs for freight, insurance, stevedoring, financing, weighing and sampling, is less than 15.0 cents per pound. However, whenever the average of the daily spot price quotations for 10 consecutive market days within any calendar quarter, adjusted to a United States delivered basis, plus the fee then in effect: (1) exceeds 16.0 cents, the fee then in effect shall be decreased by one cent; or (2) is less than 14.0 cents, the fee then in effect shall be increased by one

cent. The fee, in any event, may not be greater than 50 per centum of the average of such daily spot price quotations. Paragraph (c)(i) further provides that the quarterly adjusted fee for items 956.05 and 957.15 shall be the amount of the fee for item 956.15 plus .52 cents per pound.

the average of the daily spot (world) price quotatons for raw sugar for the applicable period prior to the third calendar quarter of 1979 has been calculated to be 14.47 cents per pound. This results in a fee of 0.00 cents per pound for item 956.15, since the sum of the 14.47 cents average spot price + 2.81 cents duty + .90 cents attributed costs is greater than 15.0 cents. Accordingly, the fee for items 956.05 and 957.15 for the first calendar quarter of 1980 is 0.52 cents per pound.

Headnote 4(c) requires the Secretary of Agriculture to determine and announce the amount of the quarterly fees no later than the 25th day of the month preceding the calendar quarter during which the fees shall be applicable. The Secretary is also required to certify the amounts of such fees to the Secretary of the Treasury and file notice thereof with the Federal Register prior to the beginning of the calendar quarter during which the fees shall be applicable. This notice is therefore being issued in order to comply with the requirements of Headnote 4(c).

Notice

Notice is hereby given that, in accordance with the requirements of Headnote 4(c) of Part 3 of the Appendix to the Tariff Schedules of the United States, it is determined that the quarterly adjusted fees for raw and refined sugar (TSUS items 956.05, 956.15, and 957.15) for the first calendar quarter of 1980 shall be as follows:

Item and fee

956.05; 0.52 cents per lb.
956.15; 0.00 cents per lb.
957.15; 0.52 cents per lb.

The amounts of such fees have been certified to the Secretary of the Treasury in accordance with paragraph (c)(iii) of Headnote 4.

Signed at Washington, D.C. on December 21, 1979.

Jim Williams,

Acting Secretary of Agriculture.

[FR Doc. 79-39726 Filed 12-28-79; 8:45 am]

BILLING CODE 3410-01-M

CIVIL AERONAUTICS BOARD

Application for an All-Cargo Air Service Certificate

December 21, 1979

In accordance with Part 291 (14 CFR Part 291) of the Board's Economic Regulations (effective November 8, 1978), notice is hereby given that the Civil Aeronautics Board has received an application, Docket 37191, from International Air Services Co., Ltd., 1710 Gilbreth Road, Burlingame, California 94010 for an all-cargo air service certificate to provide domestic cargo transportation.

Under the provisions of § 291.12(c) of Part 291, interested persons may file an answer in opposition to this application on or before January 21, 1980. An executed original and six copies of such answer shall be addressed to the Docket Section, Civil Aeronautics Board, Washington, D.C. 20428. It shall set forth in detail the reasons for the position taken and must relate to the fitness, willingness, or ability of the applicant to provide all-cargo air service or to comply with the Act or the Board's orders and regulations. The answer shall be served upon the applicant and state the date of such service.

Phyllis T. Kaylor,

Secretary.

[FR Doc. 79-39761 Filed 12-28-79; 8:45 am]

BILLING CODE 6320-01-M

Applications for Certificates of Public Convenience and Necessity and Foreign Air Carrier Permits Filed Under Subpart Q of the Board's Procedural Regulations

Notice is hereby given that, during the week ended December 21, 1979 CAB has received the applications listed below, which request the issuance, amendment, or renewal of certificates of public convenience and necessity or foreign air carrier permits under Subpart Q of 14 CFR Part 302.

Answers to foreign permit applications are due 28 days after the application is filed. Answers to certificate applications requesting restriction removal are due within 14 days of the filing of the application. Answers to conforming applications in a restriction removal proceeding are due 28 days after the filing of the original application. Answers to certificate applications (other than restriction removals) are due 28 days after the filing of the application. Answers to conforming applications or those filed in conjunction with a motion to modify scope are due within 42 days after the original application was filed. If you are in doubt as to the type of application which has been filed, contact the applicant, the Bureau of Pricing and Domestic Aviation (in interstate and overseas cases) or the Bureau of International Aviation (in foreign air transportation cases).

Subpart Q Applications

Date filed	Docket No.	Description
Dec. 18, 1979	37288	Saudi Arabian Airlines Corporation, c/o William A. Nelson, Ballard, Beasley & Nelson, 505 Commerce Building, 1700 K Street, N.W., Washington, D.C. 20006. Application of Saudi Arabian Airlines Corporation under Section 402 of the Act and Subpart Q of the Board's Procedural Regulations requests that its foreign air carrier permit authorizing charter foreign air transportation of property be amended by adding Houston, Texas as a U.S. point and designating all U.S. points as coterminals. Saudi's amended permit would authorize the following service: Planeload charter flights of property between a point or points in Saudi Arabia, on the one hand, and the coterminal points New York, New York, Dallas and Houston, Texas, on the other. Answers may be filed by January 15, 1980.
Dec. 21, 1979	37305	Texas International Airlines, Inc., P.O. Box 12788, Houston, Texas 77017. Application of Texas International Airlines, Inc., pursuant to Section 401(e)(7)(B) of the Act and Rule 1701(b) of Subpart Q of the Board's Rules of Practice for amendment of its Certificate of Public Convenience and Necessity for Route 82 so as to eliminate Conditions (4) and (5) of such Certificate as follows: "[4] On each trip over all or part of this route, the holder shall stop at each point named between the point of origin and point of termination of the trip except a point or points at which he holder has been relieved of this requirement (a) by order of the Board, (b) as a result of a suspension under sections 401(j) and 419 of the Act, (c) because of adverse weather conditions or other conditions it could not reasonably foresee or control, or (d) because condition (5) below is applicable." "[5] If the holder has scheduled two daily roundtrips at each intermediate point, it may omit that point or any additional trips scheduled over all or part of this route as long as it remains in compliance with all other conditions in this certificate: *Provided, however,* That, if the holder has scheduled one daily roundtrip to El Paso, Texas, or Salt Lake City, Utah, or one roundtrip five days per week plus one roundtrip during the weekend period to Memphis, Tennessee, it may omit that point on any additional trips." Conforming Applications and answers are due January 4, 1980.

Phyllis T. Kaylor,

Secretary.

[FR Doc. 79-39764 Filed 12-28-79; 8:45 am]

BILLING CODE 6320-01-M

[Docket No. 35936]

Commuter Airlines, Inc., Enforcement Proceeding; Hearing

The hearing in the above-entitled proceeding, previously scheduled for January 8, 1980 (44 FR 65798, November 15, 1979), is rescheduled for February 20, 1980, at 9:30 a.m. (local time), in Room 1003, Hearing Room D, Universal North Building, 1875 Connecticut Avenue, NW., Washington, D.C., before the undersigned administrative law judge.

Dated at Washington, D.C., December 21, 1979.

Elias C. Rodriguez,

Administrative Law Judge.

[FR Doc. 79-39701 Filed 12-28-79; 8:45 am]

BILLING CODE 6320-01-M

[Dockets Nos. 33363, 32548, and 32549]

Former Large Irregular Air Service Investigation (Applications of International Travel Arrangers, Inc.); Hearing

Notice is hereby given, pursuant to the Federal Aviation Act of 1958, as amended, that a hearing in the above-entitled proceeding is assigned to be held on February 1, 1980, at 9:30 a.m. (local time), in Room 1003, Hearing Room B, Universal North Building, 1875 Connecticut Avenue, NW., Washington, DC, before the undersigned administrative law judge.

Dated at Washington, DC, December 21, 1979.

Elias C. Rodriguez,

Administrative Law Judge.

[FR Doc. 79-39703 Filed 12-28-79; 8:45 am]

BILLING CODE 6320-01-M

DEPARTMENT OF COMMERCE

Maritime Administration

[Docket No. S-661]

Waterman Steamship Corp.; Application for Extension of Section 804 Waivers

Notice is hereby given that Waterman Steamship Corporation (Waterman), by letter dated October 23, 1979, has requested the extension of two waivers previously granted under section 804 of the Merchant Marine Act, 1936, as amended (the Act), for the foreign-flag operations of its affiliate (within the meaning of section 804), Coordinated Caribbean Transport, Inc. (CCT). The waivers were intended to cover the construction period of two U.S.-flag *Artubar* integrated tug/barge vessels for CCT. The first waiver was granted on January 30, 1976, to permit CCT to own, charter and operate foreign-flag vessels between Miami and Panama and Ecuador from February 2, 1976, until (a) CCT's second U.S.-flag tug/barge vessel enters service, and (b) one or both of said units enter(s) service between Miami and Panama and Ecuador. The waiver was subsequently modified in Docket No. A-106, Order on Review and Reconsideration of Waiver Granted on January 30, 1976, by the inclusion of a termination date of December 31, 1979.

The second waiver was granted on August 30, 1976, to permit CCT to own, charter and operate foreign-flag vessels between Miami and Central America from August 30, 1976, until the earlier of (a) CCT's second U.S.-flag *Artubar* vessel entering service, or (b) one or both of said vessels entering service between Miami and Central America, but no later than December 31, 1979. The waiver was subject to the following conditions: (1) CCT will operate one or both of the new U.S.-flag *Artubar* vessels proposed in CCT's CDS application dated December 23, 1975, in service between Miami and Central America pursuant to the service proposed in the CDS application, beginning no later than the date the second of such vessels enters service; and (2) from the date CCT places the second *Artubar* vessel in service, CCT will not operate any foreign-flag vessel between Miami and Central America in competition with an essential U.S.-flag service in violation of section 804 of the Act.

Waterman has requested that the January 30, 1976 waiver be extended until the earlier of (a) CCT's first U.S.-flag *Artubar* vessel entering service between Miami and Panama and Ecuador, or (b) April 1, 1983. Waterman has requested that the August 30, 1976 waiver be extended until the earlier of (a) CCT's second U.S.-flag *Artubar* vessel entering service between Miami and Central America, or (b) January 1, 1984.

CCT currently operates the following foreign-flag vessels:

Vessel, Capacity, and Service

Mar Caribe—75 Trailer Equivalent Units—Miami/Guatemala, El Salvador, Honduras, Nicaragua, Miami/Panama, Costa Rica.

Admiral Atlantic—115 Trailer Equivalent Units—Miami/Panama, Costa Rica.

Admiral Caribe—115 Trailer Equivalent Units—Miama/Guatemala, El Salvador, Honduras, Nicaragua.

The Assistant Secretary of Commerce for Maritime Affairs has granted Waterman an extension of the waivers for a period not to exceed three months from December 31, 1979.

Interested parties may inspect this application in the Office of the Secretary, Maritime Administration, Room 3099-B, Department of Commerce Building, 14th & E Streets, NW, Washington, D.C. 20230. Any person, firm or corporation desiring to offer views and comments on such application for consideration by the Assistant Secretary of Commerce for Maritime Affairs should submit such views and comments in writing, in triplicate, to the Secretary, Maritime Administration, by the close of business on January 28, 1980. This notice of Waterman's application is published as a matter of discretion. The Assistant Secretary of Commerce for Maritime Affairs will consider the views and comments received and take such action with respect to the application as may be deemed appropriate.

(Catalog of Federal Domestic Assistance Program No. 11.504, Operating-Differential Subsidy (ODS)).

By Order of the Maritime Administration.

Dated: December 21, 1979

Robert J. Patton, Jr.,

Secretary.

[FR Doc. 79-39696 Filed 12-28-79; 8:45 am]

BILLING CODE 3510-15-M

National Oceanic and Atmospheric Administration (NOAA)

Announcement of Addition to List of Recommended Areas (LRA) for Marine Sanctuary Designation; Shrewsbury Rocks, N.J.

AGENCY: Office of Coastal Zone Management (OCZM), National Oceanic and Atmospheric Administration (NOAA), Department of Commerce.

ACTION: Notice.

SUMMARY: This notice announces the addition of Shrewsbury Rocks (NJ) to the List of Recommended Areas (LRA).

SUPPLEMENTARY INFORMATION: On October 31, 1979, NOAA published an initial LRA containing those sites with at least some potential for sanctuary designation (44 FR 62552; October 31, 1979) as mandated by the General Marine Sanctuary Regulations (44 FR 44831, July 31, 1979).

Shrewsbury Rocks (NJ) is being added to the LRA. This recommendation has been reviewed in accordance with the site evaluation criteria stated in the regulations (Section 922.21(b)) and it meets the requirements for placement of the LRA. The area has a unique assemblage of distinctive geologic features which support a rich diversity of marine, estuarine, and terrestrial organisms. As New Jersey's only submarine rock outcropping, this natural rock reef is important to the high biological productivity of the region. The recommended site is an exceptional recreational fishing area and a vital habitat for many valuable marine species. The site is therefore eligible for LRA placement under several of the stated criteria (Section 922.21(b)(1)(iv), (2), and (3)).

The entire LRA will not be republished at this time; however, NOAA is required to update the LRA and publish a cumulative list in the Federal Register at least semiannually. Shrewsbury Rocks (NJ) and the other sites previously placed on the LRA will be considered for Active Candidate status and possible future designation on the basis of further evaluation criteria, as stated in the regulations. Placement of a site on the LRA or selection as an Active Candidate does not establish any regulatory controls. These actions are means by which NOAA acquires additional information on the characteristics of the particular site and solicits comment on the feasibility and desirability of sanctuary designation. Regulatory controls can be established only after the designation of a marine sanctuary in accordance with the regulations. Listing is a prerequisite for designation as a marine sanctuary, but it does not imply that designation will occur.

For further information contact: JoAnn Chandler, Acting Director, Sanctuary Programs Office, Office of Coastal Zone Management, NOAA, Page Building 1, 3300 Whitehaven Street, N.W., Washington, D.C. 20235 (202)634-4236.

Dated: December 21, 1979.

Francis J. Balint,

Acting Director, Office of Management and Computer Systems.

[FR Doc. 79-39674 Filed 12-28-79; 8:45 am]

BILLING CODE 3510-08-M

Intent To Prepare a Draft Environmental Impact Statement; Marine Sanctuary, Monterey Bay, California

AGENCY: Office of Coastal Zone Management (OCZM), National Oceanic and Atmospheric Administration (NOAA), Department of Commerce.

ACTION: Notice of Intent to prepare a draft environmental impact statement (DEIS) and hold a scoping meeting on the proposal to designate a marine sanctuary in Monterey Bay, California and adjacent waters.

SUMMARY: Pursuant to Title III of the Marine Protection, Research, and Sanctuaries Act of 1972 (16 U.S.C. 1431-1434), OCZM announces its intent to prepare a draft environmental impact statement on the proposal to designate a marine sanctuary in Monterey Bay and adjacent waters off the Central California Coast. The area under consideration extends from San Luis Obispo County to San Mateo County and from the coast offshore to three nautical miles (nmi) beyong State waters and 12 nmi seaward of Ano Nuevo Island. Alternatives which could be considered in the DEIS include the possibility of taking no action and several different boundary, regulatory, and management alternatives.

OCZM held a public workshop on this proposal in the Monterey area in April 1978 and distributed an Issue Paper on three California sites, including the Monterey proposal, in December 1978. The California Coastal Commission held regional and state public hearings on the proposal in March and April 1979 and recommended that NOAA prepare a DEIS considering each of the proposed sites.

OCZM will hold a scoping meeting to solicit information and comments from Federal agencies and interested persons toward the preparation of the DEIS. The scoping meeting will be held on January 10, 1980, at 11:00 a.m. in Room 350, Office of Coastal Zone Management, 2001 Wisconsin Avenue, N.W. Any person wishing to submit written comments on the scope of the issues they feel should be addressed may do so by sending comments to the contact listed below by January 11, 1980.

FOR FURTHER INFORMATION CONTACT: Dr. Nancy Foster or Diane Mayerfeld, Sanctuary Programs Office, OCZM, 3300 Whitehaven Street, N.W., Washington, D.C. 20235, telephone: (202) 634-4236.

Dated: December 21, 1979.

Francis J. Balint,

Acting Director, Office of Management and Computer Systems.

[FR Doc. 79-39673 Filed 12-28-79; 8:45 am]

BILLING CODE 3510-08-M

Interjurisdictional Resource Management; Public Meeting

AGENCY: National Marine Fisheries Service.

SUMMARY: State Fish and Wildlife Directors from the coastal and Great Lakes States and Territories, and officials from the National Oceanic and Atmospheric Administration, will meet to discuss State and Federal roles, responsibilities, and interactions concerned with interjurisdictional resource management. The Conference format provides for individual regional discussion sessions to develop regional consensus regarding areas of emphasis and associated priorities for NMFS State/Federal activities.

DATES: The Conference will convene on Tuesday, January 29, 1980, at 1:00 p.m.; Wednesday, January 30, 1980, at 8:30 a.m.; and January 31, 1980, at 8:15 a.m. The Conference will take place at the Olde Colony Motor Lodge and Conference Center at N. Washington Street and First Street, Alexandria, Virginia. The Conference is open to the public. Limited seating will be available on a first-come, first-served basis.

FOR FURTHER INFORMATION CONTACT: Richard H. Schaefer, Chief, State/Federal Division, National Marine Fisheries Service, Washington, D.C. 20235, (202) 634-7454.

Dated: December 21, 1979.

Winfred H. Meibohm,

Executive Director, National Marine Fisheries Service.

[FR Doc. 79-39315 Filed 12-28-79; 8:45 am]

BILLING CODE 3510-22-M

Modification of Permit No. 71

Notice is hereby given that pursuant to the provisions of Sections 216.33 (d) and (e) of the Regulations Governing the Taking and Importing of Marine Mammals (50 CFR Part 216), Scientific Research Permit No. 71 issued to the Northwest Fisheries Center, National Marine Fisheries Service on June 21, 1975, as modified, is further modified as follows:

1. Section B is modified by deleting Section B-5 and substituting therefor the following: "This Permit is valid with

respect to the taking and importing authorized hereunder until December 31, 1984."

2. Section B-6 is modified by substituting "December 31" for "June 1" wherever it appears.

3. Section B is modified by adding a new Section B-7 as follows: "Animals authorized in Section A-1 above, may have nasal, throat and rectal swabs taken in addition to other authorized activities."

4. Section A-3 is modified by deleting Subsection 3-a and substituting therefor the following: "Up to 480 California sea lions *(Zalophus californianus);"*

5. Section A is modified by adding a new Section A-5 as follows: "Up to 100 California sea lions *(Zalophus californianus)* may be captured, lavaged and released."

6. Section A is modified by adding a new Section A-6 as follows: "Up to 20 California sea lions *(Zalophus californianus)* may be captured, radio tagged, and released. These animals may also be recaptured."

In effect, this modification: (1) extends the permit for five years; (2) changes the due date for annual reports; (3) authorizes the taking of nasal, throat and rectal swabs from those animals authorized to be captured, tagged and released; and (4) authorizes 100 California sea lions to be taken, lavaged and released and 20 to be taken, radio tagged and released in lieu of taking by killing, as originally authorized by the Permit.

This modification is effective December 31, 1979.

The Permit as modified, and documentation pertaining to the modification are available for review in the following offices:

Assistant Administrator for Fisheries, National Marine Fisheries Service, 3300 Whitehaven Street, N.W., Washington, D.C.;

Regional Director, National Marine Fisheries Service, Southwest Region, 300 South Ferry Street, Terminal Island, California 90731; and

Regional Director, National Marine Fisheries Service, Northwest Region, 1700 Westlake Avenue North, Seattle, Washington 98109.

Dated: December 21, 1979.

Winfred H. Meibohm,

Executive Director, National Marine Fisheries Service.

[FR Doc. 79-39816 Filed 12-28-79; 8:45 am]

BILLING CODE 3510-22-M

Modification of Permit

Notice is hereby given that pursuant to the provisions of Sections 216.33 (d) and (e) of the Regulations Governing the Taking and Importing of Marine Mammals (50 CFR Part 216), Permit No. 31 issued to Robert Elsner, Institute of Marine Science, University of Alaska, Fairbanks, Alaska, on July 3, 1974, is modified by deleting Section B-7 and substituting therefor the following:

"This Permit is valid with respect to the taking authorized hereunder until December 31, 1982."

This modification is effective December 31, 1979.

The Permit as modified, and documentation pertaining to the modification are available for review in the following offices:

Assistant Administrator for Fisheries, National Marine Fisheries Service, 3300 Whitehaven Street, NW., Washington, DC; and

Regional Director, National Marine Fisheries Service, Alaska Region, P.O. Box 1668, Juneau, Alaska 99802.

Dated: December 14, 1979.

Winfred H. Meibohm,

Executive Director, National Marine Fisheries Service.

[FR Doc. 79-39817 Filed 12-28-79; 8:45 am]

BILLING CODE 3510-22-M

Modification of Permit

Notice is hereby given that pursuant to the provisions of Sections 216.33 (d) and (e) of the Regulations Governing the Taking and Importing of Marine Mammals (50 CFR Part 216), the Public Display Permit No. 200, issued to the Minnesota Zoological Garden, 12101 Johnny Cake Ridge Road, Apple Valley, Minnesota, on August 3, 1977, is hereby modified by deleting Section B-6 and substituting therefor the following:

"6. This permit is valid with respect to the taking authorized herein until December 31, 1981."

This modification is effective December 31, 1979.

The Permit as modified, and documentation pertaining to the modification are available for review in the following offices:

Assistant Administrator for Fisheries, National Marine Fisheries Service, 3300 Whitehaven Street, N.W., Washington, D.C.; and

Regional Director, National Marine Fisheries Service, Northeast Region, Federal Building, 14 Elm Street, Goucester, Massachusetts 01930.

Dated: December 20, 1979.

Winfred H. Meibohm,

Executive Director, National Marine Fisheries Service.

[FR Doc. 79-39818 Filed 12-28-79; 8:45 am]

BILLING CODE 3510-22-M

Receipt of Application for Permit

Notice is hereby given that an Applicant has applied in due form for a Permit to take marine mammals as authorized by the Marine Mammal Protection Act of 1972 (16 U.S.C. 1361-1407), and the Regulations Governing the Taking and Importing of Marine Mammals (50 CFR Parts 216 and 18).

1. Applicant: a. Name: Ministry of the Fishing Industry of the USSR, b. Address: 103045, Moscow, K-45, Rozhdestvenski Str. 12.

2. Type of Permit: Scientific Research.

3. Name and Number of Animals: Walrus (Odobaenus rosmarus) 200; Ribbon Seal (Histriophoca fasciata) 100; harbor seal (Phoca larga) 200; Ringed seal (Pusa hispida) 200; Bearded seal (Erignathus barbatus) 200.

4. Type of Take: To kill in the wild for the purpose of studying the abundance, distribution and dynamics of rookeries under ice conditions, as well as the age-sex composition and reproductive capacity of walruses and ice seals.

5. Location of Activity: Bering Sea.

6. Period of Activity: 4 months.

Concurrent with the publication of this notice in the Federal Register the Secretary of Commerce is forwarding copies of this application to the Marine Mammal Commission and the Committee of Scientific Advisors.

Written data or views, or requests for a public hearing on that portion of this application dealing with pinnipeds other than walrus should be submitted to the Assistant Administrator for Fisheries, National Marine Fisheries Service, Department of Commerce, Washington, D.C. 20235, on or before January 30, 1980. Those individuals requesting a hearing should set forth the specific reasons why a hearing on this particular application would be appropriate. The holding of such hearing is at the discretion of the Assistant Administrator for Fisheries. Comments, views or requests for a public hearing on that portion of this application dealing with walrus should be submitted to the Director, Fish and Wildlife Service, Department of the Interior, Washington, D.C. 20240.

All statements and opinions contained in this application are summaries of those of the Applicant and do not necessary reflect the views of the National Marine Fisheries Service or the Fish and Wildlife Service.

Documents submitted in connection with the above application are available for review in the following offices:

Assistant Administrator for Fisheries, National Marine Fisheries Service, 3300 Whitehaven Street, N.W., Washington, D.C.;

Regional Director, National Marine Fisheries Service, Alaska Region, P.O. Box 1668, Juneau, Alaska 99802; and
Director, Fish and Wildlife Service, Department of the Interior, 1000 Glebe Road, N. Arlington, Virginia 22201.

Dated: December 20, 1979.

William Aron,

Office of Marine Mammals and Endangered Species, National Marine Fisheries Service.

[FR Doc. 79-39819 Filed 12-28-79; 8:45 am]

BILLING CODE 3510-22-M

National Technical Information Service

Government-Owned Inventions; Notice of Availability for Licensing

The inventions listed below are owned by the U.S. Government and are available for domestic and possibly foriegn licensing in accordance with the licensing policies of the agency-sponsors.

Copies of the patents cited are available from the Commissioner of Patents & Trademarks, Washington, DC 20231, for $.50 each. Requests for copies of patents must include the patent number.

Copies of the patent applications can be purchased from the National Technical Information Service (NTIS), Springfield Virginia 22161 for $4.00 (8.00 outside North American Continent). Requests for copies of patent applications must include that PAT-APPL number. Claims are deleted from patent application copies sold to the public to avoid premature disclosure in the event of an interference before the Patent and Trademark Office. Claims and other technical data will usually be made available to serious prospective licensees by the agency which filed the case.

Requests for licensing information on a particular invention should be directed to the address cited for the agency-sponsor.

Douglas J. Campion,

Patent Program Coordinator, National Technical Information Service.

U.S. Department of Agriculture, Research Agreements and Patent Branch General Service Division, Federal Building Agricultural Research Service Hyattsville, Md. 20782.

Patent 4, 144, 256: Antimicrobial Fatty Acid Derivatives; filed 10 May 1978; patented Mar. 13, 1979; not available NTIS.

Patent 4, 146, 650: Substituted Benzodioxan Sweetening Compound; filed Apr. 26, 1978; patented Mar. 27, 1979; not available NTIS.

Patent 4, 154, 862: Method of Reducing Bitterness and Off After-Taste; filed Jan. 13, 1977; patented May 15, 1979; not available NTIS.

Patent 4, 157, 406: Process for Improving Baking Properties of Unbleached Cake Flour; filed Feb. 15, 1977; patented June 5, 1979; not available NTIS.

Patent 4, 159, 351: Process for Preparing Mixed Bean Salads; filed Jan. 30, 1978; patented June 26, 1979; not available NTIS.

U.S. Department of Energy, Assistant General Counsel for Patents, Washington, D.C. 20545.

Patent Application 763, 164: Tape Transport Mechanism; filed Jan. 27, 1977.

U.S. Department of Health, Education and Welfare, National Institutes of Health, Chief, Patent Branch, Westwood Building, Bethesda, Md. 20205.

Patent Application 6-058, 287: (N-phosphonacetyl-L-aspartato) (1.2 diamino-cyclohexane) platinum (II) or Alkali Metal Salt; filed July 17, 1979.

U.S. Department of the Navy, Assistant Chief for Patents, Office of Naval Reserach, Code 302, Arlington, VA. 22217.

Patent Application 6-051, 568: Terminated Bis (3,4-Dicyanophenoxy) Alkanes and Ployphthalocyanines Therefrom; filed June 25, 1979.

Patent Application 6-051, 569: Perfluorinated Aliphatic Phenoxy Bisorthodinitriles and Polyphthalocyanines therefrom; filed June 25, 1979.

Patent 4, 157, 358: Fluorinated Network Polymers; filed Oct. 13, 1978; patented June 5, 1979; not available NTIS.

[FR Doc. 79-39675 Filed 12-28-79; 8:45 am]

BILLING CODE 3510-04-M

Government-Owned Inventions; Notice of Availability for Licensing

The inventions listed below are owned by the U.S. Government and are available for domestic and possibly foreign licensing in accordance with the licensing policies of the agency-sponsors.

Copies of the patents cited are available from the Commissioner of Patents & Trademarks, Washington, DC 20231, for $.50 each. Requests for copies of patents must include the patent number.

Copies of the patent applications can be purchased from the National Technical Information Service (NTIS), Springfield, Virginia 22161 for $4.00 ($8.00 outside North American Continent). Requests for copies of patent applications must include the PAT-APPL number. Claims are deleted from patent application copies sold to the public to avoid premature disclosure in the event of an interference before the Patent and Trademark Office. Claims and other technical data will usually be made available to serious prospective licensees by the agency which filed the case.

Requests for licensing information on a particular invention should be directed to the address cited for the agency-sponsor.

Douglas J. Campion,

Patent Program Coordinator, National Technical Information Service.

U.S. Department of Agriculture, Research Agreements and Patent Branch, General Service Division Federal Building, Agricultural Research Service, Hyattsville, Md. 20782.

Patent 4,154,111: Cotton Dust Analyzer; filed Apr. 4, 1978; patented May 15, 1979; not available NTIS.

Patent 4,156,742: Method of Preparing Corn Kernel Snack Food and Product thereof; filed May 23, 1978; patented May 29, 1979; not available NTIS.

U.S. Department of Energy, Assistant General Counsel for Patents, Washington, D.C. 20545.

Patent Application 778,275: Magnetic Thin-Film Split-Domain Current Sensor Recorder; filed Mar. 16, 1977.

U.S. Department of Navy, Assistant Chief for Patents, Office of Naval Research, Code 302, Arlington, Va. 22217.

Patent 4,154,168: Flare Release System; filed Feb. 13, 1978; patented May 15, 1979; not available NTIS.

Patent 4,160,314: Degraining, a Three-Step Process To Obtain Propellant Samples from Case Bonded Motors; filed Apr. 28, 1978; patented July 10, 1979; not available NTIS.

Patent 4,160,417: Arming-Safing System for Airborne Weapons; filed Apr. 29, 1969; patented July 10, 1979; not available NTIS.

Patent 4,161,716: Very Low Frequency Sonobuoy (VLF Sonobuoy); filed Dec. 16, 1977; patented July 17, 1979; not available NTIS.

Patent 4,161,780: Spin Rate Timing System; filed June 23, 1978; patented July 17, 1979; not available NTIS.

National Aeronautics and Space Administration, Assistant General Counsel for Patent Matters, NASA Code GP-2, Washington, D.C. 20546.

Patent 4,158,583: High Performance Ammonium Nitrate Propellant; filed Dec. 16, 1977; patented June 19, 1979; not available NTIS.

Patent 4,160,601: Biocontamination and Particulate Detection System; filed Feb. 24, 1978; patented July 10, 1979; not available NTIS.

U.S. Department of Commerce, National Technical Information Service, Office of Government Inventions and Patents, Springfield, Va. 22161.

Patent Application 6-031,706: Ultra-Black Coating Due to Surface Morphology; filed Apr. 20, 1979.

Patent Application 6-020,359: Sampling Circuit and Method therefor; filed Mar. 14, 1979.

U.S. Department of Health, Education and Welfare, National Institutes of Health, Chief, Patent Branch, Westwood Building, Bethesda, Md. 20205.

Patent Application 969,571: Unitized Three Leaflet Heart Valve; filed Dec. 14, 1978.

[FR Doc. 79-39676 Filed 12-28-79; 8:45 am]
BILLING CODE 3510-04-M

Government-Owned Inventions; Notice of Availability for Licensing

The inventions listed below are owned by the U.S. Government and are available for domestic and possibly foreign licensing in accordance with the licensing policies of the agency-sponsors.

Copies of the patents cited are available from the Commissioner of Patents and Trademarks, Washington, D.C. 20231, for $.50 each. Requests for copies of patents must include the patent number.

Copies of the patent applications can be purchased from the National Technical Information Service (NTIS), Springfield, Virginia 22161 for $4.00 ($8.00 outside North American Continent). Requests for copies of patent applications must include the PAT-APPL number. Claims are deleted from patent application copies sold to the public to avoid premature disclosure in the event of an interference before the Patent and Trademark Office. Claims and other technical data will usually be made available to serious prospective licensees by the agency which filed the case.

Requests for licensing information on a particular invention should be directed to the address cited for the agency-sponsor.

Douglas J. Campion,

Patent Program Coordinator, National Technical Information Service.

Department of the Army, Chief, Intellectual Prop. Division, OTJAG, Room 2D 444, Pentagon, Washington, D.C. 20310.

Patent application 950,501: Fire-safe hydrocarbon fuels, filed Oct. 11, 1978; not available NTIS.

U.S. Department of the Air Force, AF/JACP, 1900 Half Street SW., Washington, D.C. 20324.

Patent application 6-011,585: Multiple-invariant space-variant optical processing; filed Feb. 12, 1979.
Patent application 6-017,624: Mouth mounted accelerometer pack; filed Mar. 5, 1979.
Patent application 6-017,626: Precision fir indexing device for wind tunnel models, filed Mar. 5, 1979.
Patent application 6-018,697: Automatic data restore apparatus for MNOS temporary store memory; filed Mar. 8, 1979.
Patent application 6-020,299: Self-biased ferrite resonators; filed Mar. 14, 1979.
Patent application 6-023,416: Uniform load piston ring; filed Mar. 23, 1979.
Patent application 6-025,413: High-speed real time quantizer and analog/digital converter; filed Mar. 30, 1979.
Patent application 6-026,866: Channel sealart compositions; filed Apr. 4, 1979.
Patent application 6-029,584: Flow-closing bleed valve assembly; filed Apr. 12, 1979.
Patent application 6-029,585: Sense and inject moving target indicator apparatus; filed Apr. 12, 1979.
Patent application 6-029,586: Analysis of lubricating oils for iron content; filed Apr. 12, 1979.
Patent application 6-029,947: Continuous wave chemically pumped atomic iodine laser; filed Apr. 13, 1979.
Patent application 6-032,809: Thermally stable aromatic eryne polyimides; filed Apr. 24, 1979.
Patent application 6-033,608: Method for the preparation of alkali metal salts of dinitromethane; filed Apr. 26, 1979.
Patent application 6-033,610: Process for synthesizing the alkali metal salts of dinitromethane; filed Apr. 26, 1979.
Patent application 6-036,252: Self-determination of laser frequency; filed May 4, 1979.
Patent application 612,435: Low-sheer mixing process for the manufacture of solid propellants; filed Sept. 10, 1975.
Patent application 688,840; Low-drag integration of laser beam pointing device into aircraft; filed May 27, 1976.
Patent application 936,980: An optical plummet azimuth reference assembly; filed Aug. 25, 1978.
Patent 4,147,515: Electro-chemical sensors for gas detection in electron tubes; filed Dec. 22, 1977, patented Apr. 3, 1979; not available NTIS.
Patent 4,154,415: Modulating verrier flap control system; filed Dec. 30, 1977, patented May 15, 1979; not available NTIS.
Patent 4,155,054: Microwave power limiter using electrically thin iris; filed Nov. 23, 1977, patented May 15, 1979; not available NTIS.
Patent 4,155,265: Interface shear transducer; filed Mar. 30, 1978; patented May 22, 1979; not available NTIS.
Patent 4,155,308: Sabot for simulation testing; filed Nov. 2, 1977, patented May 22, 1979; not available NTIS.
Patent 4,155,579: Rotating detent latch mechanism; filed Oct. 7, 1977: patented May 22, 1979; not available NTIS.
Patent 4,155,780: Method for prestressing turbine disks; filed Dec. 30, 1977; patented May 22, 1979; not available NTIS.
Patent 4,156,514: Cylinder support assembly; filed Mar. 23, 1978; patented May 29, 1979; not available NTIS.
Patent 4,156,878: Wideband waveguide lens; filed Jan. 25, 1978; patented May 29, 1979; not available NTIS.

U.S. Department of Agriculture, Research Agreements and Patent Branch, General Service Division, Federal Building, Agricultural Research Service, Hyattsville, Md. 20782.

Patent application 6-032,850: Crosslinked starch halohydrins and their nitrogen-containing substitution products; filed Apr. 24, 1979.
Patent application 6-034,881: Automatic spinning strength tester; filed Apr. 30, 1979.

U.S. Department of Commerce, National Tech. Information Service, Office of Government Inventions and Patents, Springfield, Virginia 22161

Patent 4,160,596: Document reproduction illumination/exposure control system; filed Oct. 18, 1977; patented July 10, 1979; not available NTIS.

U.S. Department of the Interior, Branch of Patents, 18th and C Streets NW., Washington, D.C. 20240

Patent application 6-006,138: Electrical cable coupler with rotatable protective covers; filed Jan. 24, 1979.
Patent application 6-027,133: Pressure vent for explosion-proof electrical enclosures; filed Apr. 4, 1979.
Patent application 6-029,592: Leaching gold and silver ores; filed Apr. 13, 1979.

U.S. Department of the Navy, Assistant Chief for Patents, Office of Naval Research, Code 302, Arlington, Virginia 22217.

Patent application 6-005,256: Lattice matching measurement device; filed Jan. 19, 1979.
Patent application 6-006,055: Marine mammal retrieval apparatus; filed Jan. 24, 1979.
Patent application 6-021,135: Apparatus for improving the overall efficiency of a marine screw propeller; filed Mar. 16, 1979.
Patent application 6-026,863: Fluorinated phthalonitriles and polyhthalocyanines therefrom; filed Apr. 4, 1979.
Patent application 6-026,982: A connector-to-connector adapter; filed Apr. 2, 1979.
Patent application 6-028,406: Sampled speech compression system; filed Apr. 9, 1979.
Patent application 6-029,223: Terrain vehicle contour measuring and storage device; filed Apr. 11, 1979.
Patent application 6-030,586: An active rich-power bandpass filter; filed Apr. 16, 1979.
Patent application 6-030,961: A carrier and orispersal mechanism for a microorganic mosquito larvicide; filed Apr. 18, 1979.
Patent application 6-031,277: A method for isolating a sporeforming mosquito larvicide; filed Apr. 18, 1979.
Patent application 6-033,298: Xenon fluoride and mercury chloride photodissociation lasers; filed Apr. 25, 1979.
Patent application 6-033,590: Vertical seeking aircrew escape system; filed Apr. 26, 1979.
Patent application 6-034,220: Pressure differential seafloor corer-carrier; filed Apr. 30, 1979.
Patent application 6-034,221: A system for placement of piles into the seafloor; filed Apr. 30, 1979.
Patent application 6-035,663: Laser annealing tecthnigue for improving the detectivity of detector elements in photovoltaic detector arrays; filed May 3, 1979.
Patent application 6-039,241: Surface elevation measuring apparatus; filed May 15, 1979.
Patent application 6-039,917: Pulse repetition interval generator with stagger compensation; filed May 17, 1979.
Patent application 6-040,014: Pulse repetition interval signal generator; filed May 17, 1979.
Patent application 6-042,176: Polyphony ether-bridged polyohthalocyanine; filed May 24, 1979.
Patent application 931-348: Shaft decoupling device; filed Aug. 7, 1978.

Patent application 944,433: Ejected roller shaft disconnect mechanism; filed Sept. 21, 1978.
Patent application 952-169: Rotary shaft decoupling mechanism; filed Oct. 17, 1978.
Patent application 955,542: Condition responsive cable with benoable coaxial sensor mount; filed Oct. 27, 1978.
Patent 4,114,137: Directional sonobuoy; filed Dec. 19, 1974; patented Sept. 12, 1978; not available NTIS.
Patent 4,115,753: Fiber optic accustic array; filed July 18, 1977; patented Sept. 19, 1978; not available NTIS.
Patent 4,123,732: Method of making tuned resonance passive electronic filters; filed Jan. 31, 1977; patented Oct. 31, 1978; not available NTIS.
Patent 4,128,300: Optical logic elements; filed Sept. 26, 1977; patented Dec. 5, 1978; not available NTIS.
Patent 4,128,759: Fiber optic delay line filter; filed Nov. 21, 1977; patented Dec. 5, 1978; not available NTIS.
Patent 4,131,444: Method for increasing the strength and density of lead titanate ceramic bodies; filed Aug. 25, 1977; patented Dec. 26, 1978; not available NTIS.
Patent 4,139,403: Dinitroalkyl and fluorodinitroalkyl silicon compounds; filed Aug. 19, 1977; patented Feb. 13, 1979; not available NTIS.
Patent 4,139,897: Fast two dimensional fourier transform device; filed Mar. 18, 1977; patented Feb. 13, 1979; not available NTIS.
Patent 4,140,057: Axisymmetric stabilized liner implosion system; filed May 2, 1978; patented Feb. 20, 1979; not available NTIS.
Patent 4,141,295: Actuation mine simulator; filed Feb. 13, 1978; patented Feb. 27, 1979; not available NTIS.
Patent 4,142,145: Method for determining conduction-band edge and electron affinity in semiconductors; filed Dec. 22, 1977; patented Feb. 27, 1979; not available NTIS.
Patent 4,143,299: Charged-particle beam acceleration in a converging waveguide; filed Feb. 22, 1978; patented Mar. 6, 1979; not available NTIS.
Patent 4,143,838: Folding fin assembly detent; filed Aug. 22, 1977; patented Mar. 13, 1979; not available NTIS.
Patent 4,144,488: Investigation of near-suface electronic properties in semiconductors by electron beam scanning; filed Dec. 22, 1977; patented Mar. 13, 1979; not available NTIS.
Patent 4,144,530: Combined instrusion sensor line; filed Nov. 17, 1977; patented Mar. 13, 1979; not available NTIS.
Patent 4,145,484: Safe high energy density battery; filed Jan. 23, 1978; patented Mar. 20, 1979; not available NTIS.
Patent 4,145,713: Composite video signal field recognition circuit; filed Aug. 29, 1977; patented Mar. 20, 1979; not available NTIS.
Patent 4,145,972: Dual-mode warhead initiation system; filed Dec. 17, 1976; patented Mar. 27, 1979; not available NTIS.
Patent 4,146,329: Autoalignment system for high power laser; filed Sept. 14, 1977; patented Mar. 27, 1979; not available NTIS.
Patent 4,148,032: Method and means for defocusing engine cavity reflected energy; filed Oct. 27, 1977; patented Apr. 3, 1979; not available NTIS.
Patent 4,149,770: Single-fiber duplex coupler; filed Nov. 21, 1977; patented Apr. 17, 1979; not available NTIS.
Patent 4,150,341: High-input power laser device; filed Dec. 28, 1976; patented Apr. 17, 1979; not available NTIS.
Patent 4,152,934: Vector measuring current meter; filed Mar. 1, 1978; patented May 8, 1979; not available NTIS.
Patent 4,153,368: Electro-optical detector protection device; filed Dec. 12, 1977; patented May 8, 1979; not available NTIS.

National Aeronautics and Space Administration, Assistant General Counsels for Patent Matters, NASA Code GP-2, Washington, D.C. 20546.

Patent application 6-034,529: Diced tile thermal protection for spacecraft; filed Apr. 27, 1979.

[FR Doc. 79-39677 Filed 12-28-79; 8:45 am]
BILLING CODE 3510-04-M

COMMODITY FUTURES TRADING COMMISSION

Amendments to the Platinum Futures Contract of the New York Mercantile Exchange

The Commodity Futures Trading Commission, in accordance with section 5a(12) of the Commodity Exchange Act ("Act"), 7 U.S.C. § 7a(12) (1976), as amended by the Futures Trading Act of 1978, Pub. L. No. 95-405, § 12, 92 Stat. 871 (1978), has determined that the proposed amendments set forth below to rules 90.03, 90.05, and 90.06 of the platinum futures contract, submitted by the New York Mercantile Exchange, are of major economic significance. These amendments would establish a second platinum grade eligible for delivery and provide for different trading months for this new grade than those applicable to the current Exchange platinum contract.

The amendments to rules 90.03, 90.05, and 90.06 are printed below showing deletions in brackets and additions in italic;

Rule 90.03 which reads:

Grade and Quality Specifications

[The minimum specifications shall be 99.8% pure platinum and platinum metals with a minimum of 99.5% pure platinum.]

be amended as follows:

Grade and Quality Specifications

There shall be two grades and quality specifications for delivery under platinum futures contracts, one of which is referred to as the "99.5 contract" and the other of which is referred to as the "99.9 contract".

(a) 99.5 contract. The minimum specifications shall be 99.8% pure platinum and platinum metals with a minimum of 99.5% pure platinum.

(b) 99.9 contract. The minimum specifications shall be 99.9% pure platinum.

Rule 90.05 which reads:

Delivery Months

[Trading shall be conducted in contracts providing for delivery in the months of January, April, July, October, and such other months as may be determined by the Board of Governors. The Clearing House Committee shall determine when trading in the delivery months shall commence.]

be amended as follows:

Delivery Months

Delivery months shall be different for the 99.5 contract and the 99.9 contract.

(a) Trading shall be conducted in 99.5 contracts for delivery in the months of January, April, July, October and such other months as may be determined by the Board of Governors.

(b) Trading shall be conducted in 99.9 contracts for delivery in February, May, August, November and such other months as may be determined by the Board of Governors.

The Clearing House Committee or the Board shall determine when trading in the delivery months shall commence.

90.06 Prices and Fluctuations

Change subparagraph (E) of this Rule to (F) and add a new subparagraph (E) to read as follows:

(E) There shall be a separate settling price for the 99.5 contract and the 99.9 contract and the maximum permissible price fluctuations provided for in subparagraphs (A) to (D) shall be determined and applied separately for each such contract. The allocation procedure provided for in Rule 53.07(F) shall also be applied separately for each such contract.

Any person interested in submitting written data, views, or arguments on these rules should send his comments by January 30, 1980 to Ms. Jane Stuckey, Secretariat, Commodity Futures Trading Commission, 2033 K Street, NW., Washington, D.C. 20581.

Issued in Washington, D.C., on December 21, 1979.

Jane K. Stuckey,
Secretary of the Commission.

[FR Doc. 79-39718 Filed 12-28-79; 8:45 am]
BILLING CODE 6351-01-M

CONSUMER PRODUCT SAFETY COMMISSION

Privacy Act of 1974; System of Records

AGENCY: Consumer Product Safety Commission.

ACTION: Announcement of system of records.

SUMMARY: The purpose of this document is to announce the Consumer Product Safety Commission's system of records within the government-wide system of records established by the Office of Personnel Management to implement the provisions of the Ethics in Government Act of 1978, as amended.

FOR FURTHER INFORMATION CONTACT: Joseph F. Rosenthal, Office of General Counsel, Consumer Product Safety Commission, Washington, D.C. 20207, telephone (202) 634-7770.

SUPPLEMENTARY INFORMATION: The Office of Personnel Management has created a Government-wide system of records, designated Ethics in government financial Disclosure Records, OPM/GOVT-4, to implement the financial disclosure provisions of the Ethics in Government Act of 1978, Public Law 95-521, as amended by Public Law 96-19 and 96-28. Some of the records in that system are maintained by the Consumer Product Safety Commission. The Commission is designating the records within its custody as a separate system of records and publishing this notice in order to apprise the public of their existence, and the procedures for gaining access to them. Access procedures reflect the new requirements imposed by Pub. L. 96-19, an amendment to the Ethics in Government Act of 1978. Since notice of the government-wide system of records has already been published in the Federal Register, 43 FR 60983, December 29, 1978, this Notice does not describe a new or modified system of records.

Dated: December 21, 1979.

Sadye Dunn,

Secretary, Consumer Product Safety Commission.

CPSC-21

SYSTEM NAME:

Ethics in Government Financial Disclosure Records—CPSC-21.

SYSTEM LOCATION:

Office of the Secretary, Consumer Product Safety Commission, 1111 18th Street, NW., Washington, D.C. 20207, and Ethics Officer for the Ethics in Government Act, Office of the General Counsel, Consumer Product Safety Commission, 1111 18th Street, NW., Washington, D.C. 20207.

CATEGORIES OF INDIVIDUALS COVERED BY THE SYSTEM:

This system contains records on persons nominated for the position of Commissioner of the Consumer Product Safety Commission and on the following CPSC employees: Commissioners; persons in the excepted service in positions which are of a confidential or policy-making nature; Administrative Law Judges; officers and employees, including special government employees, whose positions are classified at grades GS-16 and above, or at an equivalent rate under another pay schedule; and other officers or employees determined by the Director of the Office of Government Ethics to be of equal classification to GS-16.

CATEGORIES OF RECORDS IN THE SYSTEM:

This system of records contains financial information such as: income from salaries, honoraria, dividends, rent, interest, trusts and capital gains; interests in property held in a trade or business or for investment or the production of income; income from the sale, exchange, or purchase of real property or property such as stocks and bonds; gifts; reimbursements; liabilities in excess of $10,000 owed to any creditor; copies of and documents relating to qualified blind trusts; information on positions held in private organizations and on agreements with private employers; position descriptions; and other documents that may be generated in the course of administering the Act.

AUTHORITY FOR MAINTENANCE OF THE SYSTEM:

Pub. L. 95-521, Ethics in Government Act of 1978, as amended by Pub. L. 96-19 and Pub. L. 96-28.

PURPOSE:

These records are maintained to meet the requirements of the Ethics in Government Act of 1978, as amended, regarding the filing of financial status reports; such reports and related records are required to assure compliance with the Act and to preserve and promote the integrity of public officials and institutions.

ROUTINE USES OF RECORDS MAINTAINED IN THE SYSTEM, INCLUDING CATEGORIES OF USERS AND THE PURPOSES OF SUCH USES:

These records and information in these records may be used:

a. To disclose any and all of the information furnished by the reporting official, in accordance with the provisions of section 205 of the Ethics in Government Act of 1978, as amended, to any requesting person.

b. To disclose pertinent information to the appropriate federal, state, or local agency responsible for investigating, prosecuting, enforcing, or implementing a statute, rule, regulation, or order, where the disclosing agency becomes aware of an indication of a violation or a potential violation of civil or criminal law or regulation.

c. To provide information to a congressional office from the record of an individual in response to any inquiry from that congressional office made at the request of that individual.

d. To disclose information to another federal agency or to a court when the government is party to a judicial proceeding before the court.

e. By the Office of Personnel Management in the production of summary descriptive statistics and analytical studies in support of the function for which the records are collected or maintained, or for related work-force studies. While published statistics and studies do not contain individual identifiers, in rare instances the selection of elements of data included in the study may be structured in such a way as to make the data individually identifiable by inference.

f. To disclose information to any source when necessary to obtain information relevant to a conflict-of-interest investigation or determination.

g. By the National Archives and Records Service (General Services Administration) in records management inspections conducted under authority of 44 U.S.C. 2904 and 2906.

h. To disclose information to the Office of Management and Budget at any stage in the legislative coordination and clearance process in connection with private relief legislation as set forth in OMB Circular No. A-19.

i. To disclose, in response to a request for discovery or an appearance of a witness, information that is relevant to the subject matter involved in a pending judicial or administrative proceeding.

j. To disclose information to the officials of the Office of the Special Counsel and the Merit Systems Protection Board when requested in performance of their authorized duties.

k. By the Commission's Ethics Officer for the Ethics in Government Act for the administration and enforcement of the Ethics in Government Act of 1978, as amended.

POLICIES AND PRACTICES FOR STORING, RETRIEVING, ACCESSING, RETAINING, AND DISPOSING OF RECORDS IN THE SYSTEM:

STORAGE:

These records are maintained in file folders.

RETRIEVABILITY:

These records are retrieved by the names of the individuals on whom they are maintained.

SAFEGUARDS:

These records are located in file cabinets or file rooms to which only authorized personnel have access.

RETENTION AND DISPOSAL:

These records are maintained for a period of six years after filing, except when filed by a nominee for appointment as Commissioner who is not confirmed by the Senate, in which case the record is kept one year after the date the nominee ceases being under Senate consideration, or is no longer a candidate for the office. Records are destroyed by shredding after the retention period.

SYSTEM MANAGER(S) AND ADDRESS:

The system manager is the Ethics Officer for the Ethics in Government Act, Office of General Counsel, Consumer Product Safety Commission, 1111 18th Street, N.W. Washington, D.C. 20207.

NOTIFICATION PROCEDURE:

Individuals wishing to inquire whether this system of records contains information about them should contact the Commission's Ethics Officer for the Ethics in Government Act.

RECORDS ACCESS PROCEDURES:

Individuals wishing to request access to their records should submit their request to the Ethics Officer for the Ethics in Government Act.

Members of the public may inspect or receive copies of financial status reports and position descriptions of the government employees subject to reporting under the Ethics in Government Act. A written application for access shall be submitted to the Office of the Secretary, 1111 18th Street, N.W., Washington, D.C. 20207, stating: the applicant's name, occupation and address; the name and address of any other person or organization on whose behalf the inspection or copy is requested; and that the applicant is aware of the prohibitions on obtaining or using the report for any unlawful purpose, for any commercial purpose other than by news and communications media for dissemination to the general public, for determining or establishing the credit rating of any individual, or for use directly or indirectly in the solicitation of money for any political, charitable, or other purposes.

Application forms are available without charge from the Office of the Secretary.

Individuals seeking disclosure of records of another individual which are not generally available to the public under the Ethics in Government Act shall submit a request to the Office of the Secretary in accordance with the Commission's Procedures for Disclosure or Production of Information under the Freedom of Information Act (16 CFR Part 1015, Subpart A).

CONTESTING RECORD PROCEDURES:

Requests for contesting records under this system of records shall be submitted to the Ethics Officer for the Ethics in Government Act.

RECORD SOURCE CATEGORIES:

Information in this System of Records is provided by:

a. the subject individual or by a designated person such as a trustee, attorney, accountant, or relative.

b. Federal officials who review the statements to make conflict-of-interest determinations.

c. Persons alleging conflicts of interest and persons contacted during any investigation of the allegations.

[FR Doc. 79-39662 Filed 12-28-78; 8:45 am]

BILLING CODE 6355-01-M

Privacy Act of 1974; Systems of Records; Annual Publication

The Privacy Act of 1974 (5 U.S.C. 552a(e)(4)) requires agencies to publish annually in the Federal Register a notice of the existence and character of their systems of records. The Consumer Product Safety Commission last published the full text of its systems of records at 42 FR 48751, September 23, 1977. Since that publication, the Commission's systems of records has been amended by a document entitled CPSC-20 published at 44 FR 71857, December 12, 1979, and a document appearing elsewhere in this issue, entitled "Ethics in Government Financial Disclosure Records—CPSC-21. For the convenience of the public, the December 12, 1979, document appears below. The Commission's systems of records, therefore, consists of the material published at 42 FR 48751, September 23, 1977, the document appearing elsewhere in this issue, and the following document.

The full text of the Commission's systems of records, except for CPSC-20 and CPSC-21 mentioned above, also appear in Privacy Act Issuances, 1978 Compilations, Volume III, page 838. This volume may be ordered through the Superintendent of Documents, U.S. Government Printing Office, Washington, D.C. 20402. The price of this volume is $10.25.

Dated: December 21, 1979.

Sadye E. Dunn,

Secretary Consumer Product Safety Commission.

CPSC-20

SYSTEM NAME:

Field Work Tracking System—CPSC-20.

SYSTEM LOCATION:

Consumer Product Safety Commission, Directorate for Field Operations, 5401 Westbard Avenue, Washington, D.C. 20207, and the Area Offices listed in Appendix I.

CATEGORIES OF INDIVIDUALS COVERED BY THE SYSTEM:

Professional, non-managerial, staff members of CPSC Area Offices who are performing work assignments covered by the system.

CATEGORIES OF RECORDS IN THE SYSTEM:

The records contain information on work assignments performed by CPSC Area Offices. The data included are: CPSC identification number of the assigned employee; assignment identification number; organizational unit initiating the assignment and Area Office performing the assignment; program, project and activity codes; assignment, target, interim, and completion dates; number of activities performed; actual hours required to complete the assignment; and a narrative description of the assignment.

AUTHORITY FOR MAINTENANCE OF THE SYSTEM:

15 U.S.C. 2051 et seq.; 44 U.S.C. 3101.

ROUTINE USES OF RECORDS MAINTAINED IN THE SYSTEM, INCLUDING CATEGORIES OF USERS AND THE PURPOSES OF SUCH USES:

These records, or a compilation of these records, are used by the Directorate for Field Operations and its Area Offices as a management aid to:

(a) Track the status of field assignments

(b) Track the progress against planned goals

(c) Compare Area Office performance

(d) Identify resource allocation deficiencies

(e) Provide reports to top level CPSC management on field accomplishment.

In addition, within each Area Office, the Area Office management will use the records, or a compilation of information from the records, to:

(a) Assure efficient distribution of assignments to employees.

(b) Track employees' ability to meet target dates in relation to performance standards.

POLICIES AND PRACTICES FOR STORING, RETRIEVING, ACCESSING, RETAINING, AND DISPOSING OF RECORDS IN THE SYSTEM:

STORAGE:

Records are stored on computer magnetic media. Hard copies of the records are stored at the Consumer Product Safety Commission, Directorate for Field Operations, 5401 Westbard Avenue, Bethesda, Maryland 20207, and the Area Offices listed in Appendix I.

RETRIEVABILITY:

The records may be retrieved by any one or any combination of the data items.

SAFEGUARDS:

Access to the computer data is restricted to Area Office personnel and Field Operations Directorate staff at Headquarters through the use of computer access passwords. Hard copies of the records are kept in lockable file drawers.

RETENTION AND DISPOSAL:

Records are retained indefinitely.

SYSTEM MANAGER(S) AND ADDRESS:

Associate Executive Director for Field Operations, Consumer Product Safety Commission, 5401 Westbard Avenue, Washington, D.C. 20207.

NOTIFICATION PROCEDURE:

Same as System Manager.

RECORD ACCESS PROCEDURES:

Same as System Manager.

CONTESTING RECORD PROCEDURES:

Same as System Manager.

RECORD SOURCE CATEGORIES:

Information in this system of records comes from employees performing the recorded assignments and their supervisors.

Appendix I

Area Offices

Atlanta Area Office, 1330 West Peachtree Street, NW., Atlanta, Georgia 30309.
Boston Area Office, 100 Summer Street, 16th Floor, Room 1607, Boston, Mass. 02110.
Chicago Area Office, 230 S. Dearborn Street, Room 2945, Chicago, Illinois 60604.
Cleveland Area Office, Plaza Nine Building, Room 520, 55 Erie View Plaza, Cleveland, Ohio 44114.
Dallas Area Office, Room 410C, 500 South Ervay, Dallas, Texas 75201.
Denver Area Office, Suite 938, Guaranty Bank Bldg., 817 17th Street, Denver, Colorado 90202.
Kansas City Area Office, Suite 1500, Traders National Bank Bldg., 1125 Grand Avenue, Kansas City, Missouri 64206.
Los Angeles Area Office, 3660 Wilshire Boulevard, Suite 1100, Los Angeles, California 90010.
Minneapolis Area Office, Room 650, Federal Bldg., Fort Snelling, Twin Cities, Minnesota 55111.
New York Area Office, 6 World Trade Center, Vesey Street, 6th Floor, New York, New York 10048.
Philadelphia Area Office, 10th Floor, 400 Market Street, Philadelphia, PA 19106.
Seattle Area Office, Federal Building, Room 3240, 915 Second Avenue, Seattle, Washington 98174.
San Francisco Area Office, Suite 500, 100 Pine Street, San Francisco, Calif. 94111.

[FR Doc. 79-39683 Filed 12-28-79; 8:45 am]
BILLING CODE 6355-01-M

DEPARTMENT OF DEFENSE

Department of the Air Force

USAF Scientific Advisory Board Meeting

December 17, 1979.

The USAF Scientific Advisory Board Operational Test and Evaluation Advisory Group will hold a meeting at Kirtland Air Force Base, New Mexico, on January 22 and 23, 1980. The meeting will convene at 8:30 a.m. and adjourn at 4:30 p.m. on both days.

The group will receive classified briefings on the operational test and evaluation planned for the Wide Area Anti-Armor Munitions program. The meetings will be closed to the public in accordance with section 552b(c) of Title 5, United States Code, specifically subparagraph (1) thereof.

For further information contact the Scientific Advisory Board Secretariat at (202) 697-4811.

Carol M. Rose,

Air Force Federal Register, Liaison Officer.

FR Doc. 79-39684 Filed 12-28-79; 8:45 am]
BILLING CODE 3910-01-M

Department of the Army

Notice of Intent To Prepare Draft Environmental Impact Statement

October 22, 1979

AGENCY: Army Corps of Engineers, DoD, Seattle District.

ACTION: Notice of Intent to Prepare a Draft Environmental Impact Statement (DEIS) for a proposed multi-purpose project in the Snohomish River basin in western Washington. The project is known as the Snohomish Mediated Plan.

SUMMARY: a. *Proposed Action.* The recommended plan of action presently involves the following major project elements: a multi-purpose dam and reservoir on the North Fork Snoqualmie River, levees and floodwalls to protect the towns of North Bend and Snoqualmie, modification of an existing dam on the South Fork of the Tolt River to provide flood control storage, development of a major park at the confluence of the three forks of the Snoqualmie River, preservation of areas known as the Skykomish Braided Channel and the Snohomish Delta Lobes, and purchase of development rights and/or floodway easement along the Snoqualmie, Skykomish and Snohomish Rivers. The recommended plan may provide flood damage reduction benefits, dam safety benefits, water supply benefits, recreation benefits, and hydropower benefits.

As Corps studies progress, the recommended plan may change. For instance, it may be found that hydropower or water supply is not feasible at the North Fork multi-purpose dam, or the development of a major park at the three forks of the Snoqualmie River is not in the best interests of the local community.

b. *Alternatives.* At the present time it is likely that the only alternatives which will be described in detail in the draft EIS are the "no action" alternative and a few variations of the basic recommended plan. For instance, one of the variations may be a dam on the North Fork Snoqualmie which does not have water supply benefits, or a levee alinement for the town of Snoqualmie which is somewhat different than the alinement presented in the recommended plan. Other alternatives outside the scope of the Mediated Agreement and those previously evaluated (i.e., the Middle Fork Snoqualmie flood control dam) will be discussed in lesser detail.

c. *Public Involvement and Review.* Since 1959, Federal, State and local agencies, and the public have been participating in flood damage reduction studies for the Snohomish River basin. After a major flood in 1959, the State of Washington requested Federal assistance in reducing the flood hazard within the Snohomish River basin. In 1969, the Corps completed a feasibility study which recommended a multi-purpose dam (flood control, recreation, fishery enhancement) on the Middle Fork of the Snoqualmie River; however, Govenor Evans in 1970 objected to the proposal and asked for further studies with his Department of Ecology. From 1970 to 1973 Washington Department of Ecology and the Corps conducted a joint study to resolve environmental concerns expressed by the Governor. In June 1973, a joint report was issued, but in September 1973 the Governor re-expressed his opposition to the Middle Fork Dam. In 1974, Governor Evans sanctioned mediation of the disputed flood damage reduction plan, resulting

in the Snohomish Mediated Agreement. This Agreement consists of the following elements: multi-purpose dam on the North Fork Snoqualmie River, setback levees to protect the towns of North Bend and Snoqualmie, modification of the city of Seattle's South Fork Tolt Dam, land-use management of floodplain lands, and purchase and development of selected lands as pulbic parks. A Corps of Engineers' reconnaissance report issued in November 1976 came to the preliminary conclusion that the Snohomish Mediated Plan was feasible. In 1977 Governor Ray endorsed proceeding with detailed feasibility studies for the Snohomish River basin and in later 1978 detailed feasibility studies began. Numerous public meetings have been held since 1959. A public workshop is tentatively scheduled for December 1979.

d. *Significant Issues.* The following issues have surfaced during the Corps' feasibility study: (1) Is the North Fork Snoqualmie River the best source for additional municipal and industrial water supply for the greater Seattle metropolitan area? (2) Is there a Federal interest in purchasing development rights in the rural Snohomish River basin floodplain to reduce future flood damages? (3) Is hydropower feasible at the proposed North Fork Dam? (4) Would be Snohomish Mediated Plan reduce flood damage downstream of the city of Snoqualmie? (5) What would the fish and wildlife losses be as a result of construction of the North Fork Snoqualmie Dam? These and other concerns will be addressed in the DEIS.

e. *Other Environmental Review and Consultation Requirements.* Because the recommended plan may involve the disposal of dredged or fill material in waters of the United States and their adjacent wetlands, the DEIS may contain a Section 404b evaulation.

AVAILABILITY OF DEIS. The DEIS is presently scheduled to become available to the public in June 1981.

ADDRESS: Information about the proposed action and DEIS can be obtained by contacting: Paul Cooke or Ron Bush, Environmental Resources Section, Department of the Army, Seattle District, Corps of Engineers, Post Office Box C-3755, Seattle, Washington 98124, Telephone (206) 764-3624 (FTS 399-3624).

Dated: October 22, 1979.

Maxwell B. Carpenter, Jr.,

Lt. Col. Corps of Engineers, Acting District Engineer.

[FR Doc. 79-39685 Filed 12-28-79; 8:45 am]

BILLING CODE 3710-06-M

Corps of Engineers, Department of the Army

Intent To Prepare a Draft Environmental Impact Statement for a Proposed Golf Course Complex by Swan Lake Golf Corp. in Swan Pond, Peconic River, Great Peconic Bay, at Manorville, Suffolk County, N.Y.

AGENCY: U.S. Army Corps of Engineers, DOD.

ACTION: Notice of Intent to Prepare a Draft Environmental Impact Statement.

SUMMARY: 1. Description of Proposed Action. Swan Lake Golf Corporation has requested a permit from the New York District Corps of Engineers under Section 404 of the Clean Water Act of 1977 to complete the construction of two 18 hole golf courses in freshwater wetlands adjacent to Swan Pond, at Manorville, Suffolk, N.Y. The project involves excavation and filling of wooded swamps and cranberry bogs associated with Swan Pond.

The first golf course, located north of River Road, was constructed without prior Department of the Army authorization.

In the construction of the existing golf course, approximately 8,600 cubic yards of material was excavated in the removal of 2.5 acres of cranberry bog and 0.2 acre of wooded freshwater swamp for the creation of ponds. Approximately 32,000 cubic yards of material was used in the filling of an additional 6.6 acres of cranberry bog and 3.4 acres of wooded swamp for the creation of golf course fairways. In addition, approximately 9.6 acres of ponds were created on the upland for use as golf course water holes.

The second golf course as proposed will be located south of River Road. This proposal involves the removal (1,100 cubic yards) and filling (42,000 cubic yards) of approximately 8.6 acres of cranberry bog for the creation of golf course water holes and fairways. In addition, 10.42 acres of upland will be excavated to create more golf course waterholes.

The applicant also proposes to create about 5.2 acres of new cranberry bogs at the site.

2. Reasonable Alternatives.

a. No action.

b. Alternative project site.

c. Maintain first (existing) golf course with no mitigation of destroyed wetlands.

d. Maintain first (existing) golf course and provide for various levels of mitigation to compensate for wetlands destroyed.

e. Construct second (proposed) golf course with no mitigation of wetlands to be destroyed.

f. Construct second (proposed) golf course with various levels of mitigation to compensate for wetlands to be destoyed.

g. Various combinations of c, d, e, and f.

3. Scoping Process. a. Public Involvement. (1) Comments from public on Preliminary EIS scope of work contained in public notice issued on project.

(2) Comments at scoping meeting.

b. Significant Issues Requiring In-depth Analysis.

(1) Water Quality.
(2) Wetlands.
(3) Terrestrial Habitat.
(4) Fish and Wildlife.
(5) Hydrology.
(6) Historical and Archeological Resources.
(7) Socio-Economics.
(8) Air Quality.
(9) Noise.
(10) Traffic.
(11) Flooding.
(12) Cumulative Impacts.
(13) Alternatives.
(14) Mitigating Measures.
(15) Land-Use Planning.

c. Assignments. None proposed.

d. Environmental review and consultation. Meetings with concerned Federal, State and local governmental agencies as well as interested environmental groups.

4. Scoping Meeting will be held: Date: January 11, 1980. Time: 10 a.m. Location: Federal Building, 26 Federal Plaza—Room 2038, New York, N.Y. 10007.

5. Estimate date of statement availability: January 1981. Address: Project Manager, Mukund Parikh, Attn: NANOP-E, Tel. No. (212) 264-3913; EIS Coordinator: Mario Del Vicario, Attn: NANEN-E, Tel. No. (212) 264-4662; U.S. Army Engineer District, New York, 26 Federal Plaza, New York, N.Y. 10007.

Dated: December 17, 1979.

P. A. DeScenza,

Chief, Engineering Division.

[FR Doc. 79-39636 Filed 12-28-79; 8:45 am]

BILLING CODE 3710-06-M

Defense Nuclear Agency

Scientific Advisory Group on Effects (SAGE); Closed Meeting

Name of committee: Scientific Advisory Group on Effects (SAGE).

Dates: February 19-22, 1980.

Place: U.S. Naval Postgraduate School, Monterey, California.

Agenda: February 19 (0845-1700), February 20 (0830-1700), and February

21 (0830–1700): Presentations, Discussions and Executive Sessions on Satellite Vulnerability and Hardening to Nuclear Weapons Effects; February 22 (0830–1200) Discussions and Executive Sessions on Maritime Theater Nuclear Weapons Effects.

The presentations and discussions in the above cited agenda will focus on current and planned RDT&E programs sponsored by the Defense Nuclear Agency (DNA). Executive sessions will be held for the primary purpose of advising the Director, DNA as to the adequacy of ongoing and planned programs. All planned presentations, discussions, and executive sessions will include classified defense information; therefore, under the provisions of Sections 552b (c)(1) and (3), Title 5, U.S.C., this meeting is closed to the public.

For further information concerning the meeting contact LTC Roger C. Andrews, Attn: DDST, Headquarters, Defense Nuclear Agency, Washington, D.C. 20305.

H. E. Lofdahl,

Director, Correspondence and Directives, Washington Headquarters Services, Department of Defense.

December 21, 1979.

[FR Doc. 79-39679 Filed 12-28-79; 8:45 am]

BILLING CODE 3810-70-M

DEPARTMENT OF ENERGY

Economic Regulatory Administration

I-75 & Warren Shell; Proposed Remedial Order

Pursuant to 10 CFR 205.192(c), the Economic Regulatory Administration (ERA) of the Department of Energy hereby gives notice of a Proposed Remedial Order which was issued to I-75 & Warren Shell—Leonard Tyson, I-75 & Warren, Detroit, Michigan 48207. This Proposed Remedial Order charges Leonard Tyson with pricing violations in the amount of $2,327.99, in sales of the motor gasoline during the time period August 1, 1979, through October 23, 1979, in the State of Michigan.

A copy of the Proposed Remedial Order, with confidential information deleted, may be obtained from William D. Miller, District Manager of Enforcement, 324 East 11th Street, Kansas City, Missouri 64106. On or before January 15, 1980, any aggrieved person may file a Notice of Objection with the Office of Hearings and Appeals, 2000 M Street, N.W., Wahington, D.C. 20461, in accordance with 10 C.F.R. § 205.193.

Issued in Kansas City, Missouri, on the 18th day of December 1979.

William D. Miller,

District Manager, Central Enforcement District.

[FR Doc. 79-39667 Filed 12-28-79; 8:45 am]

BILLING CODE 6450-01-M

Canyon Lake Marina, Inc.; Proposed Remedial Order

Pursuant to 10 CFR 205.192(c), the Economic Regulatory Administration (ERA) of the Department of Energy hereby gives notice of a Proposed Remedial Order which was issued to Canyon Lake Marina, Inc., of New Braunfels, Texas. This Proposed Remedial Order charges Canyon Lake Marina, Inc. with pricing violations in the amount of $825.96, connected with the sale of certain grades of gasoline at prices in excess of the maximum lawful selling price for those grades of gasoline in violation of 10 CFR 212.93.

A copy of the Proposed Remedial Order, with confidential information deleted, may be obtained from Wayne I. Tucker, District Manager of Enforcement, Southwest District Office, Department of Energy, P.O. Box 35228, Dallas, Texas 75235—(214) 767-7745. On or before January 15, 1980, any aggrieved person may file a Notice of Objection with the Office of Hearings and Appeals, 2000 M Street NW., Washington, D.C. 20461, in accordance with 10 CFR 205.193.

Issued in Dallas, Texas, on the 19th day of December, 1979.

Wayne I. Tucker,

District Manager, Southwest District Enforcement, Economic Regulatory Administration

[FR Doc. 79-39755 Filed 12-28-79; 8:45 am]

BILLING CODE 6450-01

Fred Wright dba Wright's Freeway Texaco; Proposed Remedial Order

Pursuant to 10 CFR 205.192(c), the Economic Regulatory Administration (ERA) of the Department of Energy hereby gives notice of a Proposed Remedial Order which was issued to Fred Wright dba Wright's Freeway Texaco, 701 Choctaw, Clinton, Oklahoma 73601. This Proposed Remedial Order charges Wright's Freeway Texaco with failure to either post the maximum lawful selling price or certification, a violation of 10 CFR 212.129(b) and with sales of certain grades of gasoline at prices in excess of the maximum lawful selling price for those grades of gasoline in violation of 10 CFR 212.93.

A copy of the Proposed Remedial Order, with confidential information deleted, may be obtained from Wayne I. Tucker, District Manager of Enforcement, P.O. Box 35228, Dallas, Texas 75235, phone 214/767-7745. On or before January 15, 1980, any aggrieved person may file a Notice of Objection with the Office of Hearings and Appeals, 1000 M Street, N.W., Washington, D.C. 20461, in accordance with 10 C.F.R. Section 105.193.

Issued in Dallas, Texas on the 19th day of December, 1979.

Wayne I. Tucker,

District Manager, Southwest District Enforcement, Economic Regulatory Administration.

[FR Doc. 79-39758 Filed 12-28-79; 8:45 am]

BILLING CODE 6450-01

Harry Marrs, dba Expressway 66; Proposed Remedial Order

Pursuant to 10 CFR 205.192(c), the Economic Regulatory Administration (ERA) of the Department of Energy hereby gives notice of a Proposed Remedial Order which was issued to Harry Marrs, dba Expressway 66, 6000 N. Bryant, Oklahoma City, Oklahoma 73121. This Proposed Remedial Order charges Expressway 66 with pricing violations in the amount of $1,081.08, connected with the sale of certain grades of gasoline at prices in excess of the maximum lawful selling price for those grades of gasoline in violation of 10 CFR 212.93.

A copy of the Proposed Remedial Order, with confidential information deleted, may be obtained from Wayne I. Tucker, District Manager of Enforcement, P.O. Box 35228, Dallas, Texas 75235, phone 214/767-7745. On or before January 15, 1980, any aggrieved person may file a Notice of Objection with the Office of Hearings and Appeals, 2000 M Street, N.W., Washington, D.C. 20461, in accordance with 10 CFR 105.193.

Issued in Dallas, Texas on the 19th day of December, 1979.

Wayne I. Tucker,

District Manager, Southwest District Enforcement, Economic Regulatory Administration.

[FR Doc. 79-39754 Filed 12-28-79; 8:45 am]

BILLING CODE 6450-01-M

Hilliard Chevron Service Station; Proposed Remedial Order

Pursuant to 10 CFR 205.192(c), the Economic Regulatory Administration (ERA) of the Department of Energy hereby gives notice of a Proposed

Remedial Order which was issued to Hilliard Chevron Service Station, 511 E. Santa Fe, Grants, N.M. 87020. This Proposed Remedial Order charges Hilliard Chevron with failure to either post the maximum lawful selling price or certification, a violation of 10 CFR 212.129(b) and with pricing violations in the amount of $791.46, connected with the sale of certain grades of gasoline at prices in excess of the maximum lawful selling price for those grades of gasoline in violation of 10 CFR 212.93.

A copy of the Proposed Remedial Order, with confidential information deleted, may be obtained from Wayne I. Tucker, District Manager of Enforcement, P.O. Box 35228, Dallas, Texas 75235, phone 214/767-7745. On or before any aggrieved person may file a Notice of Objection with the Office of Hearings and Appeals, 2000 M Street, N.W., Washington, D.C. 20461, in accordance with 10 CFR § 105.193.

Issued in Dallas, Texas on the 19th day of December, 1979.

Wayne I. Tucker,

District Manager, Southwest District Enforcement, Economic Regulatory Administration.

[FR Doc. 79-39752 Filed 12-28-79; 8:45 am]

BILLING CODE 6450-01-M

K. R. "Ken" Rearick, dba Clearview Gulf Service Center; Proposed Remedial Order

Pursuant to 10 CFR 205.192(c), the Economic Regulatory Administration (ERA) of the Deparment of Energy hereby gives notice of a Proposed Remedial Order which was issued to Clearview Gulf Service Center, 3120 Clearview Parkway, Metairie, La. 70002. This Proposed Remedial Order charges Clearview Gulf Service Center with pricing violations in the amount of $9,330.41, connected with the sale of certain grades of gasoline at prices in excess of the maximum lawful selling price for those grades of gasoline in violation of 10 CFR 212.93.

A copy of the Proposed Remedial Order, with confidential information deleted, may be obtained from Wayne I. Tucker, District Manager of Enforcement, P.O. Box 35228, Dallas, Texas 75235, phone 214/767-7745. Within 15 days of publication of this Notice, any aggrieved person may file a Notice of Objection with the Office of Hearings and Appeals, 2000 M Street, N.W., Washington, D.C. 20461, in accordance with 10 CFR Section 105.193.

Issued in Dallas, Texas on the 19th day of December, 1979.

Wayne I. Tucker,

District Manager, Southwest District Enforcement, Economic Regulatory Administration.

[FR Doc. 79-39753 Filed 12-28-79; 8:45 am]

BILLING CODE 6450-01

Domestic Crude Oil Allocation Program; Entitlement Notice for October 1979

AGENCY: Department of Energy, Economic Regulatory Administration.

ACTION: October 1979 Entitlement Notice.

SUMMARY: Under the Department of Energy's (DOE) domestic crude oil allocation (entitlements) program, this is the monthly entitlement notice which sets forth the entitlement purchase or sale requirements of domestic refiners for October 1979.

DATES: Payments for entitlements required to be purchased under this notice must be made by December 31, 1979. The monthly transaction report specified in § 211.66(i) shall be filed with the DOE by January 10, 1980.

FOR FURTHER INFORMATION CONTACT:

Douglas McIver (Entitlements Program Office), Economic Regulatory Administration, 2000 M Street, N.W., Room 6128I, Washington, D.C. 20461, (202) 254-8660.

Kristina Clark (Office of General Counsel), Department of Energy, Forrestal Building, Room 6A-127, 1000 Independence Avenue, S.W., Washington, D.C. 20585, (202) 252-6744.

SUPPLEMENTAL INFORMATION: In accordance with the provisions of 10 CFR 211.67 relating to the domestic crude oil allocation program of the Department of Energy, administered by the Economic Regulatory Administration (ERA), the monthly notice specified in § 211.67(i) is hereby published.

Based on reports for October 1979 submitted to the DOE by refiners and other firms as to crude oil receipts, crude oil runs to stills, eligible product imports, middle distillate imports, eligible petroleum substitutes, and imported naphtha utilized as a petrochemical feedstock in Puerto Rico; application of the entitlement adjustment for residual fuel oil production shipped in foreign flag tankers for sale in the East Coast market provided in § 211.67(d)(4); application of the entitlement adjustments for California lower tier and upper tier crude oil provided in § 211.67(a)(4); November 1979 deliveries of crude oil for storage in the Strategic Petroleum Reserve; and application of the entitlement adjustment for small refiners provided in § 211.67(e), the national domestic crude oil supply ratio for October 1979 is calculated to be .219176.

In accordance with § 211.67(b)(2), to calculate the number of barrels of deemed old oil included in a refiner's adjusted crude oil receipts for the month of October 1979, each barrel of old oil is equal to one barrel of deemed old oil and each barrel of upper tier crude oil is equal to .592634 of a barrel of deemed old oil.

The issuance of entitlements for the month October 1979 to refiners and other firms is set forth in the Appendix to this notice. The Appendix lists the name of each refiner or other firm to which entitlements have been issued, the number of barrels of deemed old oil included in each such refiner's adjusted crude oil receipts, the number of entitlements issued to each such refiner or other firm, and the number of entitlements required to be purchased or sold by each such refiner or other firm.

Pursuant to 10 CFR 211.67(i)(4), the price at which entitlements shall be sold and purchased for the month of October 1979 is hereby fixed at $18.27, which is the exact differential as reported for the month of October between the weighted average per barrel costs to refiners of old oil and of imported and exempt domestic crude oil.

10 CFR 211.67(i)(4) was amended June 27, 1979, to eliminate the 21-cent entitlement penalty on imported and domestic exempt crude oils (44 FR 37940, June 29, 1979). The removal of the 21-cent penalty became effective beginning with August 1, 1979, crude runs to stills.

In accordance with 10 CFR 211.67(b), each refiner that has been issued fewer entitlements for the month of October 1979 than the number of barrels of deemed old oil included in its adjusted crude oil receipts is required to purchase a number of entitlements for the month of October 1979 equal to the difference between the number of barrels of deemed old oil included in those receipts and the number of entitlements issued to and retained by that refiner. Refiners which have been issued a number of entitlements for the month of October 1979 in excess of the number of barrels of deemed old oil included in their adjusted crude oil receipts for that month and other firms issued entitlements shall sell such entitlements to refiners required to purchase entitlements.

The listing of refiners' old oil receipts contained in the Appendix reflects any adjustments made by ERA pursuant to § 211.67(h).

Included in the Appendix are entitlements issued pursuant to the provisions of 10 CFR 211.67(a)(5) under which ERA may approve a firm's application for designation as a producer of a petroleum substitute. Archer Daniels Midland Company and Refuse Energy Systems Company are the only applicants thus far to receive this designation, by order issued August 23, 1979 (Docket No. ERA-APS-78-2) and the final rule of November 12, 1979 (Docket No. ERA-R-79-28).

The listing contained in the Appendix identifies in a separate column labeled "Exceptions and Appeals" additional entitlements issued to refiners pursuant to relief granted by the Office of Hearings and Appeals (prior to March 30, 1978, the Office of Administrative Review of the Economic Regulatory Administration). Also set forth in this column are adjustments for relief granted by the Office of Hearings and Appeals for 1975 and 1976, which adjustments are reflected in monthly installments. The number of installments is dependent on the magnitude of the adjustment to be made. For a full discussion of the issues involved, *see Beacon Oil Company, et al.*, 4 FEA par. 87,024 (November 5, 1976).

The listing contained in the Appendix continues the "Consolidated Sales" entry initiated in the October 1977 entitlement notice. The "Consolidated Sales" entry is equal to the October 1979 entitlement purchase requirement of Arizona Fuels. The purpose of providing for the "Consolidated Sales" entry is to ensure that Arizona Fuels is not relieved of its October 1979 entitlement purchase requirement and that no one firm will be unable to sell its entitlements by reason of a default by Arizona Fuels. For a full discussion of the issues involved, *see Entitlement Notice for October 1977* (42 FR 64401, December 23, 1977).

For purposes of § 211.67(d) (6) and (7), which provide for entitlement issuances to refiners or other firms for sales of imported crude oil to the United States Government for storage in the Strategic Petroleum Reserve, the Government made no purchases of imported crude oil.

For the month of October 1979, imports of residual fuel oil eligible for entitlement issuances totaled 24,599,865 barrels.

For the month of October 1979, imports of middle distillates eligible for entitlement issuances totaled 2,588,152 barrels.

In accordance with § 211.67(a)(4), the number of barrels of California lower tier and upper tier crude oil as reported by refiners to the DOE, and the weighted average gravity thereof are as follows:

	Volumes	Weighted average gravity
California lower tier crude oil	3,351,350	21
California upper tier crude oil	5,157,788	25

The total number of entitlements required to be purchased and sold under this notice is 22,106,969.

Based on reports submitted to the DOE by refiners as to their adjusted crude oil receipts for October 1979, the pricing composition and weighted average costs thereof are as follows:

	Volumes	Weighted average cost	Percent of total volumes[1]
Lower tier	58,168,640	$6.65	12.0
Upper tier	91,988,489	14.09	18.9
Exempt domestic:			
Heavy oil	8,346,387	18.34	1.7
Alaskan	42,487,001	20.71	8.7
Stripper	51,640,888	28.25	10.6
Naval petroleum reserve	3,658,681	21.28	0.8
Tertiary	254,373	19.25	0.1
Newly discovered	*6,179,330*	*32.78*	*1.3*
Total domestic	262,723,789	16.98	54.1
Imported	*223,000,729*	*25.05*	*45.9*
Total reported crude oil receipts	485,724,518	20.68	
Total reported crude oil runs to stills	471,171,654		
Total uncontrolled (exempt domestic and imported)	335,567,389	24.92	69.1

[1] Volumes may not add due to rounding.

Payment for entitlements required to be purchased under 10 CFR 211.67(b) for October 1979 must be made by December 31, 1979.

On or prior to January 10, 1980, each firm which is required to purchase or sell entitlements for the month of October 1979 shall file with the DOE the monthly transaction *report specified* in 10 CFR 211.66(i) certifying its purchases and sales of entitlements for the month of October. The monthly transaction report forms for the month October have been mailed to reporting firms. Firms that have been unable to locate other firms for required entitlement transactions by December 31, 1979 are requested to contact the ERA at (202) 254-3336 to expedite consummation of these transactions. For firms that have failed to consummate required entitlement transactions on or prior to December 31, 1979, the ERA may direct sales and purchases of entitlements pursuant to the provisions of 10 CFR 211.67(k).

This notice is issued pursuant to Subpart G, 10 CFR Part 205. Any person aggrieved hereby may file an appeal with the Office of Hearings and Appeals in accordance with Subpart H of 10 CFR Part 205. Any such appeal shall be filed on or before January 30, 1980.

Issued in Washington, D.C., on December 26, 1979.

Douglas G. Robinson,

Acting Administrator, Economic Regulatory Administration.

BILLING CODE 6450-01-M

NOTICE OF ENTITLEMENTS FOR DOMESTIC CRUDE OIL
DECEMBER 1979

REPORTING FIRM SHORT NAME	DEEMED OLD OIL ADJUSTED RECEIPTS	********** TOTAL ISSUED	EXCEPTIONS AND APPEALS	ENTITLEMENT POSITION ENTITLEMENTS PRODUCT	CALIFORNIA	REQUIRED TO BUY	********** REQUIRED TO SELL
-CONSOL'D-SALES	-52,518	0	0	0	0	0	52,518 1/
A-JOHNSON	-1,266	74,162	0	0	0	0	75,428
ADM	0	8,222	0	0	0	0	8,222
ALLIED	61,719	63,195	0	0	0	0	1,476
AMER-PETROFINA	532,148	973,088	0	0	0	0	440,940
AMERADA-HESS	2,281,182	4,129,521	0	145,429	0	0	1,848,339
AMOCO	10,780,502	6,768,133	0	0	0	4,012,369	0
ANCHOR	193	26,369	0	0	24	0	26,176
APEX	0	35,885	0	35,885	0	0	35,885
ARCO	3,409,717	5,081,364	0	0	8,904	0	1,671,647
ARIZONA	84,032	31,514	0	0	2,074	52,518 1/	0
ASAMERA	113,680	122,729	0	0	0	0	9,049
ASHLAND	1,374,994	2,370,284	0	0	0	0	995,290
BASIN	15,948	74,579	0	0	2,144	0	58,631
BAYOU	40,520	33,778	0	0	0	6,742	0
BEACON	107,302	86,172	-6,986	0	6,488	21,130	0
BELCHER	0	168,043	0	168,043	0	0	168,043
BI-PETRO	15,438	25,513	0	0	0	0	10,075
BRUIN	176,406	104,614	0	0	0	71,792	0
C&H	0	177	0	0	0	0	177
CALCASIEU	114,664	95,875	0	0	0	18,789	0
CALUMET	19,759	18,425	0	0	0	1,334	0
CANAL	124,943	52,613	0	0	0	72,330	0
CARBONIT	91,676	64,940	0	0	0	26,736	0
CARIBOU	60,773	37,235	0	0	0	23,538	0
CASTLE	0	40,318	0	40,318	0	0	40,318
CHAMPLIN	2,144,990	988,644	0	0	107,821	1,156,346	0
CHARTER	390,729	471,947	-4,835	0	0	0	81,218
CHARTER-BAHAMAS	0	394,352	0	394,352	0	0	394,352
CHEVRON	6,425,909	8,037,901	277,700 2/	9,704	101,904	0	1,611,992
CIBRO	0	166,377	0	37,253	0	0	166,377
CITGO	1,855,567	1,684,071	0	0	0	171,496	0
CLAIBORNE	72,437	33,893	0	0	0	38,544	0
CLARK	451,473	647,868	0	0	0	0	196,395

NOTICE OF ENTITLEMENTS FOR DOMESTIC CRUDE OIL
DECEMBER 1979

REPORTING FIRM SHORT NAME	DEEMED OLD OIL ADJUSTED RECEIPTS	********** TOTAL ISSUED	EXCEPTIONS AND APPEALS	ENTITLEMENT POSITION ENTITLEMENTS PRODUCT	CALIFORNIA	REQUIRED TO BUY	********** REQUIRED TO SELL
COASTAL	266,130	1,625,993	35,003	103,013	0	0	1,359,863
COASTAL-PETRO	0	31,808	0	0	0	0	31,808
COLONIAL	0	46,352	0	46,352	0	0	46,352
CONOCO	2,968,341	2,283,166	0	25,839	32,358	685,175	0
CONSUMERS-POWER	0	64,373	0	64,373	0	0	64,373
COPANO	27,066	18,668	0	0	0	8,398	0
CORAL	0	123,286	0	0	0	0	123,286
CORCO	0	702,293	0	134,091	0	0	702,293
CRA-FARMLAND	361,012	545,035	0	0	0	0	184,023
CROSS	41,955	64,065	0	0	0	0	22,110
CROWN	276,705	631,167	0	0	0	0	354,462
CRYSTAL-OIL	144,328	91,460	0	0	0	52,868	0
CRYSTAL-REF	0	16,969	0	0	0	0	16,969
DELTA	190,390	359,432	18,705	0	0	0	169,042
DEMENNO	0	43,473	0	0	0	0	43,473
DETROIT-ED	0	43,761	0	43,761	0	0	43,761
DFSC	0	335	0	335	0	0	335
DIAMOND	603,146	378,759	0	0	0	224,387	0
DILLMAN	0	416	0	0	0	0	416
DORCHESTER	10,154	203,664	0	0	0	0	193,510
DOW	159,182	81,390	0	0	0	77,792	0
E-SEABOARD	0	85,536	0	85,536	0	0	85,536
ECO	6,337	36,688	0	0	818	0	30,351
EDDY	49,076	28,694	0	0	0	20,382	0
ENERGY-COOP	1,933	609,469	0	0	0	0	607,536
ENTERPRISE	0	5,209	0	5,209	0	0	5,209
ERGON	21,033	83,735	0	0	0	0	62,702
ERICKSON	74,050	85,489	0	0	0	0	11,439
EVANGELINE	27,925	15,517	0	0	0	12,408	0
EXXON	9,567,353	9,455,043	363,019 2/	448,046	0	112,310	0
EZ-SERVE	-2,998	12,825	0	0	0	0	15,823
FARMERS-UN	160,487	257,397	0	0	0	0	96,910
FLETCHER	175,827	204,815	0	0	1,749	0	28,988
FLINT	5,333	5,390	0	0	0	0	57

NOTICE OF ENTITLEMENTS FOR DOMESTIC CRUDE OIL
DECEMBER 1979

REPORTING FIRM SHORT NAME	DEEMED OLD OIL ADJUSTED RECEIPTS	********** TOTAL ISSUED	ENTITLEMENT POSITION EXCEPTIONS AND APPEALS	ENTITLEMENTS PRODUCT	ENTITLEMENTS CALIFORNIA	REQUIRED TO BUY	********** REQUIRED TO SELL
FRIENDSWOOD	18,856	68,962	0	0	0	0	50,106
FUNDING	74,051	33,489	0	0	0	40,562	0
GARY	207,094	83,128	0	0	0	123,966	0
GETTY	1,257,734	1,331,724	0	0	0	0	73,990
GIANT	39,171	35,424	0	0	0	3,747	0
GIBSON	0	29,417	0	0	0	0	29,417
GLACIER-PARK	108,976	34,687	0	0	0	74,289	0
GLADIEUX	72,831	85,125	0	0	0	0	12,294
GOLDEN-EAGLE	0	101,826	0	0	0	0	101,826
GOLDKING	181,430	148,706	0	0	0	32,724	0
GOOD-HOPE	15,931	468,526	0	0	0	0	452,595
GUAM	0	164,456	0	0	0	0	164,456
GULF	8,418,890	5,942,057	0	58,079	14,306	2,476,833	0
GULF-ENERGY	75,604	24,401	0 5/	0	0	51,203	0
GULF-STS	141,068	83,030	0	0	0	58,038	0
HIRI	0	465,800	0	0	0	0	465,800
HOWELL	297,985	277,340	0	0	0	20,645	0
HUDSON-OIL	35,453	131,140	0	0	0	0	95,687
HUNT	280,421	187,491	0	0	0	92,930	0
HUNTWAY	192,025	124,582	0	0	33,143	67,443	0
HUSKY	771,532	771,532	440,239 3/	0	0	0	0
INDEPENDENT-REF	-67,579	106,036	0	0	0	0	173,615
INDIANA-FARM	45,531	166,225	0	0	0	0	120,694
INDUST-FUEL	42,216	18,471	0	0	0	23,745	0
INTER-PETRO	0	66,753	0	66,753	0	0	66,753
INTER-PROCESS	18,319	192,671	0	0	0	0	174,352
IRVING	0	19,362	0	19,362	0	0	19,362
KENCO	35,150	25,399	0	0	0	9,751	0
KENTUCKY	16,025	40,804	30,461	0	0	0	24,779
KERN	143,909	166,909	0	0	4,939	0	23,000
KERR-MCGEE	1,121,241	779,498	0	0	0	341,743	0
KOCH	644,376	888,979	0	0	0	0	244,603
LAGLORIA	272,114	236,735	0	0	0	35,379	0
LAKE-CHARLES	84,729	45,606	0	0	0	39,123	0

NOTICE OF ENTITLEMENTS FOR DOMESTIC CRUDE OIL
DECEMBER 1979

REPORTING FIRM SHORT NAME	DEEMED OLD OIL ADJUSTED RECEIPTS	********** TOTAL ISSUED	ENTITLEMENT POSITION EXCEPTIONS AND APPEALS	ENTITLEMENTS PRODUCT	ENTITLEMENTS CALIFORNIA	REQUIRED TO BUY	********** REQUIRED TO SELL
LAKEHEAD	0	8,657	8,657 2/	0	0	0	8,657
LAKESIDE	40,828	17,175	0	0	0	23,653	0
LAKETON	82,021	139,779	80,090	0	0	0	57,758
LITTLE-AMER	1,492,190	520,271	9,164	0	0	971,919	0
LOUISIANA-LAND	703,611	293,456	0	0	0	410,155	0
MACMILLAN	93,295	109,661	0	0	8,679	0	16,366
MALLARD	27,520	27,304	0	0	0	216	0
MANATEE	298,939	298,939	204,795	0	0	0	0
MARATHON	4,708,254	3,121,109	0	0	0	1,587,145	0
MARION	-110,832	156,742	0	0	0	0	267,574
METROPOLITAN	0	131,999	0	131,999	0	0	131,999
MID-AMER	664	24,911	0	0	0	0	24,247
MOBIL	5,424,711	5,149,878	0	58,958	50,701	274,833	0
MOBILE-BAY	2,371	122,873	0	0	0	0	120,502
MOHAWK	271,876	207,608	0	0	15,615	64,268	0
MONOCO	0	9,669	0	9,669	0	0	9,669
MONSANTO	458,212	152,813	0	0	0	305,399	0
MORRISON	24,992	8,509	0	0	0	16,483	0
MOUNTAINEER	4,258	1,300	0	0	0	2,958	0
MT-AIRY	78,992	106,343	0	0	0	0	27,351
MURPHY	1,162,611	808,683	0	0	0	353,928	0
N-AMER-PETRO	106,556	170,250	0	0	0	0	63,694
NATL-COOP	163,985	74,640	0	0	0	89,345	0
NAVAJO	400,302	227,520	0	0	0	172,782	0
NEVADA	8,854	21,297	0	0	0	0	12,443
NEW-EDGINGTON	216,949	190,205	0	0	29,291	26,744	0
NEW-ENGL-POWER	0	58,224	0	58,224	0	0	58,224
NEWHALL	81,375	129,856	0	0	7,915	0	48,481
NORTHEAST-PETRO	0	31,652	0	31,652	0	0	31,652
NORTHLAND	27,373	27,373	18,939	0	0	0	0
NORTHVILLE	0	36,196	0	36,196	0	0	36,196
OKC	159,480	166,280	0	0	0	0	6,800
OKLA-REF	-19,600	99,356	0	0	0	0	118,956
OXNARD	11,160	22,928	0	0	3,399	0	11,768

NOTICE OF ENTITLEMENTS FOR DOMESTIC CRUDE OIL
DECEMBER 1979

REPORTING FIRM SHORT NAME	DEEMED OLD OIL ADJUSTED RECEIPTS	********** TOTAL ISSUED	EXCEPTIONS AND APPEALS	ENTITLEMENT POSITION ENTITLEMENTS PRODUCT	CALIFORNIA	REQUIRED TO BUY	********** REQUIRED TO SELL
PEERLESS	0	4,810	0	0	0	0	4,810
PENNZOIL	515,582	306,438	0	0	0	209,144	0
PESTER	135,992	164,937	0	0	0	0	28,945
PETRACO-VALLEY	0	57,896	0	0	0	0	57,896
PHILLIPS	3,085,025	1,661,863	0	0	-665	1,423,162	0
PHILLIPS-PR	0	228,107	0	228,107	0	0	228,107
PIONEER	82,967	39,771	0	0	0	43,196	0
PLACID	576,311	304,420	0	0	0	271,891	0
PLATEAU	223,215	151,065	0	0	0	72,150	0
PORT	1,458	8,883	0	0	0	0	7,425
POWERINE	115,583	222,325	0	0	13,742	0	106,742
PRIDE	170,704	70,886	0	0	0	99,818	0
QUAKER-ST	40,780	188,266	0	0	0	0	147,486
QUITMAN	0	57,570	0	0	0	0	57,570
RANCHO-REF	0	29,297	0	0	0	0	29,297
RESCO	0	37,897	0	0	0	0	37,897
RICHARDS	129	35	0	0	0	94	0
ROAD-OIL	0	10,147	0	0	0	0	10,147
ROCK-ISLAND	168,448	265,648	0	0	0	0	97,200
SABER-TEX	23,008	134,833	0	0	0	0	111,825
SABRE-CAL	180	55,205	0	0	889	0	55,025
SAGE-CREEK	4,209	1,235	0	0	0	2,974	0
SAN-JOAQUIN	-127,153	79,606	0	0	-13,460	0	206,759
SCALLOP	0	254,405	0	254,405	0	0	254,405
SCHULZE	13,104	5,041	0	0	0	8,063	0
SEAVIEW	0	223,878	0	0	0	0	223,878
SECTOR	41,600	33,869	0	0	0	7,731	0
SEMINOLE	10,013	93,319	0	0	0	0	83,306
SENTRY	-16,594	176,957	76,292	0	277	0	193,551
SHELL	9,698,358	6,444,497	0	0	36,118	3,253,861	0
SHEPHERD	33,280	48,252	0	0	0	0	14,972
SIGMOR	24,879	144,380	0	0	0	0	119,501
SILVER-EAGLE	4,416	3,682	0	0	0	734	0
SLAPCO	164,660	94,066	0	0	0	70,594	0

NOTICE OF ENTITLEMENTS FOR DOMESTIC CRUDE OIL
DECEMBER 1979

REPORTING FIRM SHORT NAME	DEEMED OLD OIL ADJUSTED RECEIPTS	********** TOTAL ISSUED	ENTITLEMENT POSITION EXCEPTIONS AND APPEALS	ENTITLEMENTS PRODUCT	ENTITLEMENTS CALIFORNIA	REQUIRED TO BUY	********** REQUIRED TO SELL
SO-HAMPTON	53,809	59,051	0	0	0	0	5,242
SOHIO	1,360,048	3,089,163	0	0	0	0	1,729,115
SOMERSET	24,485	32,248	0	0	0	0	7,763
SOUND	0	63,651	0	0	0	0	63,651
SOUTHERN-UNION	173,375	190,926	0	0	0	0	17,551
SOUTHLAND	476,021	375,065	194,958	0	0	100,956	0
SOUTHWESTERN	11,840	4,918	0	0	0	6,922	0
SPRAGUE	0	25,025	0	25,025	0	0	25,025
SUNLAND	32,047	90,530	0	0	4,919	0	58,483
SUNOCO	3,794,473	3,228,840	0	17,021	0	565,633	0
T&S	2,801	37,865	0	0	0	0	35,064
TENNECO	1,179,610	634,942	0	0	3,944	544,668	0
TESORO	232,036	438,240	0	0	0	0	206,204
TEXACO	6,590,199	6,657,115	58,929 2/	230,645	-1,259	0	66,916
TEXAS-AMERICAN	15,052	59,154	0	0	0	0	44,102
TEXAS-ASPH	27,879	12,195	0	0	0	15,684 4/	0
TEXAS-CITY	410,146	710,013	0	0	0	0	299,867
THAGARD	8,525	79,702	0	0	-2,449	0	71,177
THRIFTWAY	46,015	39,231	0	0	0	6,784	0
THUNDERBIRD	43,832	82,116	0	0	0	1,716	0
TIPPERARY	52,441	30,700	0	0	0	21,741	0
TONKAWA	102,797	66,516	0	0	0	36,281	0
TOSCO	1,467,510	1,296,438	0	0	81,986	171,072	0
TOTAL-PETROLEUM	-109,789	577,314	0	0	0	0	687,103
UCC-CARIBE	0	191,821	0	191,821	0	0	191,821
UNI-REF	16,657	94,982	0	0	0	0	78,325
UNION-OIL	3,206,880	2,755,573	0	0	20,779	451,307	0
UNTD-REF	131,427	247,270	0	0	0	0	115,843
US-OIL	14,628	99,984	0	0	1,355	0	85,356
USA-PETROCHEM	92,202	173,650	0	0	8,152	0	81,448
VAL-VERDE	5,524	3,498	0	0	0	2,026	0
VICKERS	152,235	448,187	0	0	0	0	295,952
VICKSBURG	3,225	40,964	0	0	0	0	37,739
WALLER	0	6,575	0	6,575	0	0	6,575

NOTICE OF ENTITLEMENTS FOR DOMESTIC CRUDE OIL
DECEMBER 1979

REPORTING FIRM SHORT NAME	DEEMED OLD OIL ADJUSTED RECEIPTS	********** TOTAL ISSUED	EXCEPTIONS AND APPEALS	ENTITLEMENT POSITION ENTITLEMENTS PRODUCT	CALIFORNIA	REQUIRED TO BUY	********** REQUIRED TO SELL
WARRIOR	32,715	53,195	27,016	0	0	0	20,480
WEST-COAST	16,460	52,511	0	0	4,521	0	36,051
WESTERN	116,571	57,137	0	0	0	59,434	0
WINSTON	79,067	101,114	0	0	0	0	22,047
WIREBACK	0	443	0	0	0	0	443
WITCO	27,643	145,884	0	0	2,165	0	118,241
WYATT	0	14,197	0	14,197	0	0	14,197
WYOMING	0	60,375	0	0	0	0	60,375
YETTER	0	272	0	0	0	0	272
YOUNG	58,932	67,888	40,797	0	0	0	8,956
TOTAL	111,273,184	111,273,184	1,872,943	3,226,223	593,286	22,106,969	22,106,969

1/ See discussion in Notice.

2/ Entitlements issued pursuant to the regulation issued May 24, 1979 (44 FR 31162, May 31, 1979) and amended August 31, 1979 (44 FR 52170, September 7, 1979) which provides entitlements benefits for imports of middle distillates for the months of May 1979 through October 1979.

3/ This is consistent with the court's order prohibiting any further entitlement purchase requirements by this firm pursuant to the terms of the court's Judgment in Husky Oil Co. v. DOE, et al., Civ. Action No. C77-190-B (D. Wyo., filed March 14, 1978), remanded _____ F.2d _____ (No. 10-18 TECA, August 10, 1978).

4/ This does not include the purchase obligation stayed by court order in Texas Asphalt and Refinery Co. v. FEA, Civ. Action No. 4-75-268 (N.D. Tex., filed October 31, 1975).

5/ No entitlement purchase obligation is imposed on this company in the current list with respect to the start-up inventory, pursuant to a Temporary Restraining Order issued by the United States District Court for the Northern District of Texas, December 14, 1979.

[FR Doc. 79-39883 Filed 12-28-79; 8:45 am]

BILLING CODE 6450-01-C

Energy Information Administration

Publication of Alternative Fuel Price Ceilings and Incremental Price Threshold for High Cost Natural Gas; Correction

Corrections: To December 20, 1979, publication (Vol. 44, No. 246).

1. On Page 75612, Column 1, Section I. Alternative Fuel Price Ceilings, the price for Arkansas should be ¹2.73 not ¹2.74.

2. On Page 75612, Column 3, Section III, Item C., Listing of States by Region, in Region A, Vermont should be added and in Region C, Virginia should be added.

Issued in Washington, D.C. on December 21, 1979.

Al Linden,

Deputy Administrator, Energy Information Administration.

[FR Doc. 79-39663 Filed 12-28-79; 8:45 am]

BILLING CODE 6450-01-M

Office of Energy Research

High Energy Physics Advisory Panel; Notice of Open Meeting

Pursuant to the provisions of the Federal Advisory Committee Act (Pub. L. 92-463, 86 Stat. 770), notice is given of the following advisory committee meeting:

Name: High Energy Physics Advisory Panel.

DATE AND TIME: Monday, January 21, 1980—9:00 a.m.-6:00 p.m., Tuesday, January 22, 1980—9:00 a.m.-4:00 p.m.

Place: Orange Room, Central Laboratory, Stanford Linear Accelerator Center (SLAC), Stanford, California.

Contact: Georgia Hildreth, Director, Advisory Committee Management, Department of Energy, Room 8G087, 1000 Independence Avenue, SW., Washington, D.C. 20585, Telephone: 202-252-5187.

Purpose of committee: To provide advice and guidance on a continuing basis with respect to the high energy physics research program.

Tentative agenda: Review of the activities and program of SLAC

Discussions of the FY 1980 and FY 1981 DOE and National Science Foundation budgets for High Energy Physics

Discussions of the future U.S./European cooperative and collaborative efforts in High Energy Physics

Consideration of long-range plans, FY 1982 and beyond, for the U.S. High Energy Physics program

Status reports on the superconducting magnets for the Fermilab Energy Saver and the Brookhaven ISABELLE construction projects

The Long Range Accelerator R&D Subpanel

The Cornell University CESR and CLEO facilities

Public participation: The meeting is open to the public. The Chairperson of the Committee is empowered to conduct the meeting in a fashion that will, in his judgment, facilitate the orderly conduct of business. Any member of the public who wishes to file a written statement with the Committee will be permitted to do so, either before or after the meeting. Members of the public who wish to make oral statements pertaining to agenda items should contact the Advisory Committee Management office at the address or telephone number listed above. Requests must be received at least 5 days prior to the meeting and reasonable provision will be made to include the presentation on the agenda.

Transcripts: Available for public review and copying at the Freedom of Information Public Reading Room, Room GA-152, Forrestal Building, 1000 Independence Avenue, SW., Washington, D.C., between 8:00 a.m. and 4:30 p.m., Monday through Friday, except Federal holidays.

Executive summary: Available approximately 30 days following the meeting from the Advisory Committee Management Office.

Issued at Washington, D.C. on December 21, 1979.

Georgia Hildreth,

Director, Advisory Committee Management.

[FR Doc. 79-39758 Filed 12-28-79; 8:45 am]

BILLING CODE 8450-01-M

High Energy Physics Advisory Panel, Subpanel on Accelerator R. & D.; Open Meeting

Pursuant to the provisions of the Federal Advisory Committee Act (Pub. L. 92-463, 86 Stat. 770), notice is given of the following advisory committee meeting:

Name: Subpanel on Accelerator R. & D. of the High Energy Physics Advisory Panel.

Date and time: Thursday, January 17, 1980—9:00 a.m.-6:45 p.m. and from 7:45 p.m.-9:00 p.m. Friday, January 18, 1980—9:00 a.m.-5:00 p.m.

Place: Orange Room, Central Laboratory, Stanford Linear Accelerator Center (SLAC), Stanford, California.

Contact: Georgia Hildreth, Director, Advisory Committee Management, Department of Energy, Room 8G087, 1000 Independence Avenue SW., Washington, D.C. 20585, Telephone: 202-252-5187.

Purpose of committee: To provide advice and guidance on a continuing basis with respect to the high energy physics research program.

Tentative agenda: The status of accelerator R. & D. at SLAC, including discussions of superconducting radio frequency accelerating structures and the single-pass collider concept

The status of accelerator R. & D. at Lawrence Berkeley Laboratory

A review of accelerator R. & D. in the USSR

A tutorial presentation on laser acceleration of charged particle beams

Public participation: The meeting is open to the public. The Chairperson of the Committee is empowered to conduct the meeting in a fashion that will, in his judgment, facilitate the orderly conduct of business. Any member of the public who wishes to file a written statement with the Committee will be permitted to do so, either before or after the meeting. Members of the public who wish to make oral statements pertaining to agenda items should contact the Advisory Committee Management Office at the address or telephone number listed above. Requests must be received at least 5 days prior to the meeting and reasonable provision will be made to include the presentation on the agenda.

Transcripts: Available for public review and copying at the Freedom of Information Public Reading Room, Room GA-152, Forrestal Building, 1000 Independence Avenue, S.W., Washington, D.C., between 8:00 a.m. and 4:30 pm., Monday through Friday, except Federal holidays.

Issued at Washington, D.C. on December 21, 1979.

Georgia Hildreth,

Director, Advisory Committee Management.

[FR Doc. 79-39757 Filed 12-28-79; 8 45 am]

BILLING CODE 6450-01-M

Federal Energy Regulatory Commission

[Docket No. ER80-131]

Alabama Power Co.; Notice of Filing

December 20, 1979.

The filing Company submits the following:

Take notice that Alabama Power Company on December 13, 1979, tendered for filing an Agreement with Pea River Electric Cooperative, Inc., intended as a rate schedule. This agreement provides for a capacity decrease at Pea River Electric Cooperative's Ozark delivery point. This agreement provides for a capacity of 2500 KVA at 13,200 volts. This contract was executed to only reflect a reduction in the transformer capacity. It is not the intent of this agreement to extend the terms of the existing contract for this delivery point. Service will continue to be provided under Rate Schedule REA-1 and the applicable revisions thereto.

Copies of the filing were served upon Pea River Electric Cooperative, Inc.

Any person desiring to be heard or to protest said application should file a petition to intervene or protest with the Federal Energy Regulatory Commission, 825 North Capitol Street, N.E., Washington, D.C. 20426, in accordance with Sections 1.8 and 1.10 of the Commission's Rules of Practice and Procedure (18 CFR 1.8, 1.10). All such petitions or protests should be filed on or before January 10, 1980. Protests will be considered by the Commisssion in determining the appropriate action to be taken, but will not serve to make protestants parties to the proceeding. Any person wishing to become a party must file a petition to intervene. Copies of this filing are on file with the Commission and are available for public inspection.

Kenneth F. Plumb,

Secretary.

[FR Doc. 79-39771 Filed 12-28-79; 8:45 am]

BILLING CODE 6450-01-M

[Docket No. ER80-127]

Cliffs Electric Service Co.; Notice of Proposed Tariff Change

December 20, 1979.

The filing Company submits the following:

Take notice that Cliffs Electric Service Company (Service Company), on December 10, 1979, tendered for filing a proposed change in its Rate Schedule FERC No. 6. The proposed change would extend Part II (Short Term Power) of the contract between Service Company and the City of Marquette Board of Light and Power from October 27, 1979, to February 1, 1980. Service would be under the same terms and conditions provided in the contract.

The extension of the "Short Term Power" provision in the contract is necessary to allow Marquette additional time to install bag filters at its coal-fired generating units.

Any person desiring to be heard or to protest said application should file a protest or petition to intervene with the Federal Energy Regulatory Commission, 825 North Capitol Street, N.E., Washington, D.C. 20426, in accordance with Sections 1.8 and 1.10 of the Commission's Rules of Practice and Procedure (18 CFR 1.8, 1.10). All such petitions or protests should be filed on or before January 10, 1980. Protests will be considered by the Commission in determining the appropriate action to be taken, but will not serve to make protestants parties to the proceeding. Any person wishing to become a party must file a petition to intervene. Copies of this filing are on file with the Commission and are available for public inspection.

Kenneth F. Plumb,

Secretary.

[FR Doc. 79-39760 Filed 12-28-79; 8:45 am]

BILLING CODE 6450-01-M

[Dockets Nos. RP78-18, et al.]

El Paso Natural Gas Co., et al.; Filing of Pipeline Refund Reports and Refund Plans

December 20, 1979.

Take notice that the pipelines listed in the Appendix hereto have submitted to the Commission for filing proposed refund reports or refund plans. The date of filing, docket number, and type of filing are also shown on the Appendix.

Any person wishing to do so may submit comments in writing concerning the subject refund reports and plans. All such comments should be filed with or mailed to the Federal Energy Regulatory Commission, 825 North Capitol Street, N.E., Washington, D.C. 20426, on or before January 3, 1980. Copies of the respective filings are on file with the Commission and available for public inspection.

Kenneth F. Plumb,

Secretary.

Appendix

Filing date	Company	Docket No.	Type filing
July 26, 1979	El Paso Natural Gas Co	RP78-18	Statement.
October 20, 1979	Algonquin Gas Transmission Co	RP76-15	Plan.
November 26, 1979 and December 3, 1979.	Distrigas of Massachusetts Corp	CP70-196	Report.
October 12, 1979	Montana-Dakota Utilities Co	RP74-97	Report.

[FR Doc. 79-39782 Filed 12-28-79; 8:45 am]

BILLING CODE 6450-01-M

[Docket No. ES80-21]

Gulf States Utilities Co.; Notice of Application

December 20, 1979.

Take notice that on December 7, 1979, Gulf States Utilities Company (Applicant) filed an application seeking an order pursuant to Section 204(a) of the Federal Power Act authorizing the issuance of up to $100,000,000 principal amount of First Mortgage Bonds and up to 500,000 shares of New Preferred Stock, via competitive bidding.

Applicant is incorporated under the laws of Texas with its principal business office in Beaumont, Texas, and is engaged in the electric utility business in portions of Louisiana and Texas. Natural Gas is purchased at wholesale and distributed at retail in the City of Baton Rouge and vicinity.

Any person desiring to be heard or to make any protest with reference to said application should on or before December 31, 1979, file with the Federal Energy Regulatory Commission, Washington, D.C. 20426, petitions or protests in accordance with the requirements of the Commission's Rules of Practice and Procedure (18 CFR 1.8 or 1.10).

Kenneth F. Plumb,

Secretary.

[FR Doc. 79-39777 Filed 12-28-79; 8:45 am]

BILLING CODE 6450-01-M

[Docket No. RP76-3]

The Inland Gas Co., Inc.; Notice of Motion for Extension of Interim Curtailment Procedures

December 20, 1979.

Take notice that on December 7, 1979, The Inland Gas Company, Inc. (Movant), P.O. Box 1273, Charleston, West Virginia 25325, filed in Docket No. RP76-3 a motion for extension of interim curtailment procedures to authorize Movant to implement curtailments of deliveries of natural gas through 1980 in accordance with the curtailment plan presently set forth in its FERC Gas Tariff, First Revised Volume No. 1, all as more fully set forth in the motion on file with the Commission and open to public inspection.

Movant states that its interim curtailment plan as set forth in its July 31, 1975, tariff filing and as subsequently modified has been permitted to be continued in effect through 1979 and requests authorization to continue said plan in effect through 1980. The currently effective plan is said to encompass precisely the same allocation procedures that have been

used since December 16, 1974, with the unanimous support of its eight large industrial customers, *i.e.*, those customers with maximum daily contract quantities in excess of 300 Mcf of gas that do not qualify for protection from curtailment as essential agricultural users under Part 281 of the Commission Rules (18 CFR, Part 281). The plan is said to operate by allocating Movant's gas supply deficiencies on a proportional basis among these customers.

The motion states that Movant has determined an estimate of the total gas supplies it will have available in 1980 and the deficiencies in deliveries to the eight large industrial customers. These customers are said to support conditionally the continuation of the plan during 1980. The current plan is said to provide full protection to residential consumers, commercial consumers, small industrial customers, and essential agricultural users.

Any person desiring to be heard or to make any protest with reference to said motion should on or before January 2, 1980, file with the Federal Energy Regulatory Commission, Washington, D.C. 20426, a petition to intervene or a protest in accordance with the requirements of the Commission's Rules of Practice and Procedure (18 CFR 1.8 or 1.10). All protests filed with the Commission will be considered by it in determining the appropriate action to be taken but will not serve to make the protestants parties to the proceeding. Any person wishing to become a party to a proceeding or to participate as a party in any hearing therein must file a petition to intervene in accordance with the Commission's Rules.

Kenneth F. Plumb,

Secretary.

[FR Doc. 79-39775 Filed 12-28-79; 8:45 am]

BILLING CODE 6450-01-M

[Docket No. TC80-42]

Mid Louisiana Gas Co.; Notice of Tariff Filing

December 20, 1979.

Take notice that on November 30, 1979, Mid Louisiana Gas Company (Mid Louisiana), Twenty first floor, Lykes Center, 300 Poydras Street, New Orleans, Louisiana 70130 in Docket No. TC80-42 tendered for filing pursuant to Order No. 55 and Section 281.302 *et seq.*, of the Commission's Regulations under the Natural Gas Policy Act of 1978 (NGPA) the following sheets of its FERC Gas Tariff, First Revised Volume No. 1:

Third Revised Sheet No. 23f

Third Revised Sheet No. 23g

Second Revised Sheet No. 23h

The sheets are proposed to become effective January 1, 1980.

Mid Louisiana states that the filing is being made in accordance with the FERC's Alternative Fuel Determination adopted by Order No. 55 issued October 26, 1979, in Docket No. RM79-40 prescribing which fuels the Commission has determined to be economically practicable and available as a substitute for the essential agricultural use of natural gas during the 1979-1980 winter heating season and how certain essential agricultural users of natural gas must remove from their priority 2 entitlements those volumes of gas for which there is an alternative fuel. Order No. 55 implemented the provisions of Section 401(b) of the NGPA. Mid Louisiana further states that the tariff sheets amend the request for Priority 2 (Essential Agricultural Use) of one customer, Crown Zellerbach Corporation, which has an alternative fuel capability. Additionally, Mid Louisiana states that it has been notified by all other essential agricultural users which have capacity in excess of 300 Mcf of natural gas per day that they have no alternative fuel capabilities.

Any person desiring to be heard or to protest said tariff filings should on or before January 7, 1980, file a petition to intervene or a protest with the Federal Energy Regulatory Commission, 825 North Capitol Street, N.E., Washington, D.C. 20426, in accordance with the requirements of the Commission's Rules of Practice and Procedure (18 CFR 1.8 or 1.10). All protests filed with the Commission will be considered by it in determining the appropriate action to be taken but will not serve to make the protestants parties to the proceeding. Any person wishing to become a party to a proceeding or to participate as a party in any hearing therein must file a petition to intervene in accordance with the Commission's Rules.

Kenneth F. Plumb,

Secretary.

[FR Doc. 79-39781 Filed 12-28-79; 8:45 am]

BILLING CODE 6450-01-M

[Docket No. ER80-132]

Minnesota Power & Light Co.; Notice of Filing

December 20, 1979.

The filing Company submits the following:

Take notice that on December 13, 1979, Minnesota Power & Light Company (MP&L) tendered for filing a firm power Electric Service Agreement dated March 26, 1979 between MP&L and the City of Pierz, Minnesota. This agreement will supersede and replace the Electric Service Agreement dated February 11, 1970, FERC Rate Schedule No. 98, the term of which will expire February 9, 1980.

Any person desiring to be heard or to protest said filing should file a petition to intervene or protest with the Federal Energy Regulatory Commission, 825 North Capitol St., N.E., Washington, D.C. 20426, in accordance with Sections 1.8 and 1.10 of the Commission's Rules of Practice and Procedure (18 CFR 1.8, 1.10). All such petitions or protests should be filed on or before January 10, 1980. Protests will be considered by the Commission in determining the appropriate action to be taken, but will not serve to make protestants parties to the proceeding. Any person wishing to become a party must file a petition to intervene. Copies of this filing are on file with the Commission and are available for public inspection.

Kenneth F. Plumb,

Secretary.

[FR Doc. 79-39772 Filed 12-28-79; 8:45 am]

BILLING CODE 6450-01-M

[Docket No. ER80-133]

Minnesota Power & Light Co.; Notice of Filing

December 20, 1979.

The filing Company submits the following:

Take notice that on December 13, 1979, Minnesota Power & Light Company (MP&L) tendered for filing a firm power Electric Service Agreement dated March 26, 1979 between MP&L and the City of Randall, Minnesota. This agreement will supersede and replace the Electric Service Agreement dated February 25, 1970, FERC Rate Schedule No. 99, the term of which will expire April 4, 1980.

Any person desiring to be heard or to protest said filing should file a petition to intervene or protest with the Federal Energy Regulatory Commission, 825 North Capitol St., N.E., Washington, D.C. 20426, in accordance with Sections 1.8 and 1.10 of the Commission's Rules of Practice and Procedure (18 CFR 1.8, 1.10). All such petitions or protests should be filed on or before January 10, 1980. Protests will be considered by the Commission in determining the appropriate action to be taken, but will not serve to make protestants parties to the proceeding. Any person wishing to become a party must file a petition to intervene. Copies of this filing are on file

with the Commission and are available for public inspection.

Kenneth F. Plumb,

Secretary.

[FR Doc. 79-39779 Filed 12-28-79; 8:45 am]

BILLING CODE 6450-01-M

[Docket No. ES80-22]

Missouri Power & Light Co.; Notice of Application

December 20, 1979.

Take notice that on December 10, 1979, Missouri Power & Light Company (Applicant) filed an application seeking an order pursuant to Section 204 of the Federal Power Act authorizing the issuance of short-term, unsecured promissory notes in an aggregate amount of $12,000,000, with final maturities not later than December 31, 1981.

The proceeds will be used to finance in part Applicant's construction program to December 31, 1981. The construction program of Applicant, as now scheduled, calls for plant expenditures of approximately $34,052,000 for 1979, 1980 and 1981.

Any person desiring to be heard or to make any protest with reference to the application should on or before December 31, 1979, file with the Federal Energy Regulatory Commission, Washington, D.C. 20426, petitions or protests in accordance with the Commission's Rules of Practice and Procedure (18 CFR 1.8 or 1.10). All protests filed with the Commission will be considered by it in determining the appropriate action to be taken but will not serve to make the protestants parties to the proceeding. Persons wishing to become parties to the proceeding or to participate as a party in any hearing therein must file petitions to intervene in accordance with the Commission's Rules. The application is on file with the Commission and is available for public inspection.

Kenneth F. Plumb,

Secretary.

[FR Doc. 79-39778 Filed 12-28-79; 8:45 am]

BILLING CODE 6450-01-M

[Docket Nos. G-7642, et al.]

Mobil Oil Corporation, et al.; Notice of Applications for Certificates, Abandonment of Service and Petitions To Amend Certificates [1]

December 21, 1979.

Take notice that each of the Applicants listed herein has filed an application or petition pursuant to Section 7 of the Natural Gas Act for authorization to sell natural gas in interstate commerce or to abandon service as described herein, all as more fully described in the respective applications and amendments which are on file with the Commission and open to public inspection.

It appears reasonable and consistent with the public interest in this case to prescribe a period shorter than 10 days for the filing of protests and petitions to intervene. Therefore, any person desiring to be heard or to make any protest with reference to said application should on or before December 28, 1979, file with the Federal Energy Regulatory Commission, Washington D.C. 20246, a petition to intervene or a protest in accordance with the requirements of the Commission's Rules of Practice and Procedure (18 CFR 1.8 or 1.10). All protests filed with the Commission will be considered by it in determining the appropriate action to be taken but will not serve to make the protestants parties to the proceeding. Any person wishing to become a party to a proceeding or to participate as a party in any hearing therein must file a petition to intervene in accordance with the Commission's Rules.

Take further notice that, pursuant to the authority contained in and subject to the jurisdiction conferred upon the Federal Energy Regulatory Commission by Sections 7 and 15 of the Natural Gas Act and the Commission's Rules of Practice and Procedure a hearing will be held without further notice before the Commission on all applications in which no petition to intervene is filed within the time required herein if the Commission on its own review of the matter believes that a grant of the certificates or the authorization for the proposed abandonment is required by the public convenience and necessity. Where a petition for leave to intervene is timely filed, or where the Commission on its own motion believes that a formal hearing is required, further notice of such hearing will be duly given.

Under the procedure herein provided for, unless otherwise advised, it will be unnecessary for Applicants to appear or to be represented at the hearing.

[1] This notice does not provide for consolidation for hearing of the several matters covered herein.

Docket No. and date filed	Applicant	Purchaser and location	Price per Mcf	Pressure base
C-7642, D, July 10, 1979	Mobil Oil Corp., Nine Greenway Plaza—Suite 2700, Houston Tex. 77046.	Northern Natural Gas Co., SE/4 of Sec. 24-T34S-R40W, Morton County, Kansas (Uttell No. 1 Well) and S/2, Sec. 27-34S-35W, Stevens County, Kansas (Morford No. 2).	Release of gas for irrigation fuel.	
C177-365, C, Oct. 15, 1979	General American Oil Co., of Texas, Meadows Building, Dallas, Tex. 75206.	Transcontinental Gas Pipe Line Corp., Blocks Nos. 243 and 244, South Marsh Island, North Addition, Gulf of Mexico.	(1)	15.025
C178-50, Sept. 25, 1978	Continental Oil Co., P.O. Box 2197, Houston, Tex. 7701.	El Paso Natural Gas Co., San Juan Area, San Juan County, N. Mex.	(2)	15.025
C178-924, Sept. 29, 1978	ARCO Oil and Gas Co., a Division of Atlantic Richfield Co., P.O. Box 2819, Dallas, Tex. 75221.	Northwest Pipeline Corp., Ignacio-Blanco Field, La PLata County, Colo.	(2)	15.025

[1] Applicant is filing under Gas Purchase Contract dated December 2, 1978, amended by amendment dated October 4, 1979.

[2] Applicant is willing to accept the applicable national rate pursuant to Opinion No. 770, as amended.

Filing Code: A—Initial Services. B—Abandoment. C—Amendment to add acreage. D—Amendment to delete acreage. E—Total Succession. F—Partial Succession.

Kenneth F. Plumb,

Secretary.

[FR Doc. 79-39785 Filed 12-28-79; 8:45 am]

BILLING CODE 6450-01-M

[Docket No. EL80-8]

Montaup Electric Co.; Notice of Application To Include Construction Work in Progress in Rate Base

December 21, 1979.

The filing company submits the following:

Take notice that on December 13, 1979 Montaup Electric Company ("Montaup") filed a petition to include a portion of construction work in progress ("CWIP") in rate base in its wholesale rates to meet a severe financial difficulty arising from the cash requirements of its construction program. Those rates govern service (1) to its retail distribution affiliates within the Eastern Utilities Associates ("EUA") system, Eastern Edison Company ("Eastern Edison") and Blackstone Valley Electric Company ("Blackstone") and (2) to four non-affiliated customers, the Pascoag Fire District, Newport Electric Corporation, and the Tiverton Division of the Narragansett Electric Company, all in Rhode Island, and the Town of Middleborough in Massachusetts. EUA is a registered holding company under the Public Utility Holding Company Act of 1935 and owns all of the common stock of Eastern Edison and Blackstone. Eastern Edison in turn owns all of Montaup's permanent securities.

Montaup states that in order to meet its capacity needs after 1982 it has or will acquire ownership interests in four 1150 megawatt nuclear generating units: (1) a five percent interest in each of the two Seabrook units scheduled to go into service in 1983 and 1985, (2) a 4.02% interest in the Millstone No. 3 unit scheduled for service in 1986, and (3) a 2.15% interest in the Pilgrim No. 2 unit scheduled for service in 1987. According to Montaup, its cash requirements for construction will amount to $154 million over the period 1980–1984, more than its present capitalization of $150 million, and CWIP will be over half of its net investment in plant including CWIP in every year 1980–1985. Montaup states that with no CWIP in rate base its internal generation of cash will be insufficient to enable it to finance its construction program to completion of the second Seabrook unit.

Montaup requests permission to include CWIP in rate base until the second Seabrook unit is completed and included in Montaup's rate base as plant in service. Montaup asks the Commission to order an expedited proceeding on its application and to establish a procedural schedule that will permit a final order on rehearing to be issued by January 1, 1981.

Montaup states that it has served a copy of its petition on its wholesale customers, the Massachusetts Department of Public Utilities and the Rhode Island Public Utilities Commission.

Any person desiring to be heard or to make any protest with reference to said filing should, on or before *January 30,* 1980, file with the Federal Energy Regulatory Commission, 825 North Capitol Street, N.E., Washington, D.C. 20426, petitions to intervene or protests in accordance with the requirements of the Commission's Rules of Practice and Procedure (18 CFR 1.8 or 1.10).

All protests filed with the Commission will be considered by it in determining the appropriate action to be taken but will not serve to make the protestants parties to the proceeding. Persons wishing to participate as a party in any hearing therein must file petitions to intervene in accordance with the Commission's Rules. The documents filed by Montaup Electric Company are on file with the Commission and available for public inspection.

Kenneth F. Plumb,

Secretary.

[FR Doc. 79-39783 Filed 12-28-79; 8:45 am]

BILLING CODE 6450-01-M

[Docket No. CP80-125]

Natural Gas Pipeline Co. of America; Notice of Application

December 21, 1979.

Take notice that on December 6, 1979, Natural Gas Pipeline Company of America (Applicant), 122 South Michigan Avenue, Chicago, Illinois 60603, filed in Docket No. CP80-125 an application pursuant to Section 7(c) of the Natural Gas Act and Section 284.221 of the Commission's Regulations under the Natural Gas Policy Act of 1978 (NGPA) for a certificate of public convenience and necessity for blanket authorization to transport natural gas on behalf of other interstate pipeline companies, all as more fully set forth in the application which is on file with the Commission and open to public inspection.

Applicant requests blanket authorization to transport natural gas for other interstate pipeline companies for terms of up to two years. It states that it would comply with Section 284.221(d) of the Commission's Regulations under the NGPA.

Any person desiring to be heard or to make any protest with reference to said application should on or before January 4, 1980, file with the Federal Energy Regulatory Commission, Washington, D.C. 20426, a petition to intervene or a protest in accordance with the requirements of the Commission's Rules of Practice and Procedure (18 CFR 1.8 or 1.10) and the Regulations under the Natural Gas Act (18 CFR 157.10). All protests filed with the Commission will be considered by it in determining the appropriate action to be taken but will not serve to make the protestants parties to the proceeding. Any person wishing to become a party to a proceeding or to participate as a party in any hearing therin must file a petition to intervene in accordance with the Commission's Rules.

Take further notice that, pursuant to the authority contained in and subject to jurisdiction conferred upon the Federal Energy Regulatory Commission by Sections 7 and 15 of the Natural Gas Act and the Commission's Rules of Practice and Procedure, a hearing will be held without further notice before the Commission or its designee on this application if no petition to intervene is filed within the time required herein, if the Commission on its own review of the matter finds that a grant of the certificate is required by the public convenience and necessity. If a petition for leave to intervene is timely filed, or if the Commission on its own motion believes that a formal hearing is required, further notice of such hearing will be duly given.

Under the procedure herein provided for, unless otherwise advised, it will be unnecessary for Applicant to appear or be represented at the hearing.

Kenneth F. Plumb,

Secretary.

[FR Doc. 79-39784 Filed 12-28-79; 8:45 am]

BILLING CODE 6450-01-M

[RM79-3]

Natural Gas Policy Act of 1978; Notice of Receipt of Application for Approval of Alternative Filing Requirements From U.S. Geological Survey and the State of Colorado Oil and Gas Conservation Commission

Issued December 21, 1979:

Take notice that on November 21, 1979, the United States Geological Survey (USGS) and the State of Colorado Oil and Gas Conservation Commission (Colorado) filed with the Commission applications for approval of alternative filing requirements pursuant to 18 C.F.R. § 274.207.

The alternative filing requirements sought by USGS and Colorado would enable operators to make applications for additional wells in Fruitland-Pictured Cliffs, Mesaverde, and Dakota-

Morrison proration units without repeated submittals of geological and engineering data already on file with the Federal Energy Regulatory Commission pursuant to the State of Colorado's Order No. 112–46, as ratified by the USGS Oil and Gas Supervisor for the Southern Rocky Mountain Area. Order No. 112–46 permits the drilling of an additional well on existing 320-acre proration units, and three additional wells on existing 640-acre proration units in the Ignatio Blanco Field, La Plata and Archuleta Counties, Colorado.

Colorado additionally submitted an application for approval of alternative filing requirements for additional wells drilled pursuant to Colorado's Oil and Gas Conservation Commission's Order No. 232–20. This order provides for optional drilling of an additional well in the undrilled quarter section of each 320-acre drilling and spacing unit for production of gas from the "J" Sand underlying certain lands in the Wattenberg Gas Spaced Area as described in the orders.

The alternative filing requirements submitted by USGS and Colorado would replace the requirements of § 274.204(f), of the Commission's Rules and Regulations, 18 C.F.R. § 274.204(f).

In its application, the USGS has requested that the Commission shorten the usual comment period of thirty days provided by § 274.207(c). In support of its request USGS states that several operators have proposed wells awaiting the Commission's approval in the matter.

Accordingly, any interested person may file written comments regarding these applications with this Commission, 825 N. Capitol St., N.E., Washington, D.C. 20426, on or before January 7, 1980. All comments filed by that date will be considered prior to the Commission's action on the application.

Kenneth F. Plumb,

Secretary.

[FR Doc. 79-39793 Filed 12-28-79; 8:45 am]

BILLING CODE 6450-01-M

[Docket No. CP80-131]

Northern Natural Gas Co.; Notice of Application

December 21, 1979.

Take notice that on December 10, 1979, Northern Natural Gas Company (Applicant), 2223 Dodge Street, Omaha, Nebraska 68102, filed in Docket No. CP80–131 an application pursuant to Section 7(c) of the Natural Gas Act and Section 284.221 of the Commission's Regulations under the Natural Gas Policy Act of 1978 (NGPA) for a certificate of public convenience and necessity for blanket authorization to transport natural gas on behalf of other interstate pipeline companies, all as more fully set forth in the application which is on file with the Commission and open to public inspection.

Applicant requests blanket authorization to transport natural gas for other interstate pipeline companies for periods of up to two years. It states that it would comply with Section 284.221(d) of the Commission's Regulations under the NGPA.

Any person desiring to be heard or to make any protest with reference to said application should on or before January 4, 1980, file with the Federal Energy Regulatory Commission, Washington, D.C. 20426, a petition to intervene or a protest in accordance with the requirements of the Commission's Rules of Practice and Procedure (18 CFR 1.8 or 1.10) and the Regulations under the Natural Gas Act (18 CFR 157.10). All protests filed with the Commission will be considered by it in determining the appropriate action to be taken but will not serve to make the protestants parties to the proceeding. Any person wishing to become a party to a proceeding or to participate as a party in any hearing therein must file a petition to intervene in accordance with the Commission's Rules.

Take further notice that, pursuant to the authority contained in and subject to jurisdiction conferred upon the Federal Energy Regulatory Commission by Sections 7 and 15 of the Natural Gas Act and the Commission's Rules of Practice and Procedure, a hearing will be held without further notice before the Commission or its designee on this application if no petition to intervene is filed within the time required herein, if the Commission on its own review of the matter finds that a grant of the certificate is required by the public convenience and necessity. If a petition for leave to intervene is timely filed, or if the Commission on its own motion believes that a formal hearing is required, further notice of such hearing will be duly given.

Under the procedure herein provided for, unless otherwise advised, it will be unnecessary for Applicant to appear or be represented at the hearing.

Kenneth F. Plumb,

Secretary.

[FR Doc. 79-39768 Filed 12-28-79; 8:45 am]

BILLING CODE 6450-01-M

[Docket No. ER80-135]

Otter Tail Power Co.; Notice of Filing

December 20, 1979.

Take notice that on December 17, 1979, Otter Tail Power Company (Otter Tail) tendered for filing Amendment No. 1 Integrated Transmission Agreement between Cooperative Power Association and Otter Tail, dated September 6, 1979. Otter Tail states that this Integrated Transmission Agreement between Cooperative Power Association and Otter Tail dated August 25, 1967, was originally filed October 10, 1967.

Any person desiring to be heard or to protest said application should file a petition to intervene or protest with the Federal Energy Regulatory Commission, 825 North Capitol Street, N.E., Washington, D.C. 20426, in accordance with Sections 1.8 and 1.10 of the Commission's Rules of Practice and Procedure (18 CFR 1.8, 1.10). All such petitions or protests should be filed on or before January 11, 1980. Protests will be considered by the Commission in determining the appropriate action to be taken, but will not serve to make protestants parties to the proceeding. Any person wishing to become a party must file a petition to intervene. Copies of this application are on file with the Commission and are available for public inspection.

Kenneth F. Plumb,

Secretary.

[FR Doc 79-33773 Filed 12-28-79; 8:45 am]

BILLING CODE 6450-01-M

[Docket No. CP80-134]

Panhandle Eastern Pipe Line Co.; Notice of Application

December 21, 1979.

Take notice that on December 12, 1979, Panhandle Eastern Pipe Line Company (Applicant), P.O. Box 1642, Houston, Texas 77001, filed in Docket No. CP80–134 an application pursuant to Section 7(c) of the Natural Gas Act and Section 284.221 of the Commission's Regulations under the Natural Gas Policy Act of 1978 (NGPA) for a certificate of public convenience and necessity for blanket authorization to transport natural gas on behalf of other interstate pipeline companies, all as more fully set forth in the application which is on file with the Commission to public inspection.

Applicant requests blanket authorization to transport natural gas for other interstate pipeline for terms of up to two years. It states that it would comply with Section 284.221(d) of the

Commission's Regulations under the NGPA.

Any person desiring to be heard or to make any protest with reference to said application should on or before January 4, 1980, file with the Federal Energy Regulatory Commission, Washington, D.C. 20456, a petition to intervene or a protest in accordance with the requirements of the Commission's Rules of Practice and Procedure (18 CFR 1.8 or 1.10) and the Regulations under the Natural Gas Act (18 CFR 157.10). All protests filed with the Commission will be considered by it in determining the appropriate action to be taken but will not serve to make the protestants parties to the proceeding. Any person wishing to become a party to a proceeding or to a participate as a party in any hearing therein must file a petitioner to intervene in accordance with the Commission's Rules.

Take further notice that, pursuant to the authority contained in and subject to jurisdiction conferred upon the Federal Energy Regulatory Commission by Sections 7 and 15 of the Natural Gas Act and the Commission's Rules of Practice and Procedure, a hearing will be held without further notice before the Commission or its designee on this application if no petition to intervene is filed within the time required herein, if the Commission on its own review of the matter finds that a grant of the certificate is required by the public convenience and necessity. If a petition for leave to intervene is timely filed, or if the Commission on its own motion believes that a formal hearing is required, further notice of such hearing will be duly given.

PECo states that this filing has been sent to the Regulatory Commissions of Pennsylvania, New Jersey, Maryland, Delaware, Virginia and the District of Columbia for their information.

Any person desiring to be heard or to protest said application should a petition to intervene or protest with the Federal Energy Regulatory Commission, 825 North Capitol Street, N.E., Washington, D.C. 20426, in accordance with Sections 1.8 and 1.10 of the Commission's Rules of Practice and Procedure (18 CFR 1.8, 1.10). All such petitions or protests should be filed on or before January 10, 1980. Protests will be considered by the Commission in determining the appropriate action to be taken, but will not serve to make protestants parties to the proceeding. Any person wishing to become a party must file a petition to intervene. Copies of this filing are on file with the Commission and are available for public inspection.

Kenneth F. Plumb,

Secretary.

[FR Doc. 79-39787 Filed 12-28-79; 8:45 am]

BILLING CODE 6450-01-M

[Docket No. ER80-134]

Philadelphia Electric Co.; Filing

December 20, 1979.

The filing Company submits the following:

Take notice that on December 14, 1979, Philadelphia Electric Company (PECo), on behalf of the signatories to the Extra High Voltage Transmission System Agreement (EHV Agreement) filed new Schedules 14.01 and 15.01 supplementing the EHV Agreement which is on file with the Commission, to become effective on February 15, 1980. PECo states that the parties to this Agreement are:

Atlantic City Electric Company.
Baltimore Gas and Electric Company.
Delmarva Power & Light Company.
Jersey Central Power & Light Company.
Metropolitan Edison Company.
Pennsylvania Electric Company.
Pennsylvania Power & Light Company.
Philadelphia Electric Company.
Potomac Electric Power Company.
Public Service Electric and Gas Company.
UGI Corporation.

PECo states that all of the parties to the EHV Agreement have approved the new schedules and the filing by PECo.

PECo states that the new schedules set forth methods and procedures for determining use, use entitlements, and charges for use of the EHV Transmission System for uses other than those specified in Section 3.1 of the EHV Agreement, by either signatories or non-signatories; and for allocating payments among the signatories. There is no provision for any change in the monthly rate for excess of investment responsibility as previously filed.

Under the procedure herein provided for, unless otherwise advised, it will be unnecessary for Applicant to appear or be represented at the hearing.

Kenneth F. Plumb,

Secretary.

[FR Doc. 79-39774 Filed 12-28-79; 8:45 am]

BILLING CODE 6450-01-M

[Dockets Nos. ER79-478 and ER79-479]

Public Service Co. of New Mexico; Order Granting Rehearing in Part and Denying Rehearing in Part

Issued: December 18, 1979.

Public Service Company of New Mexico (PNM) filed a motion for reconsideration or clarification of the Commission's August 28, 1979 order in the above-captioned dockets. Additionally, a petition for rehearing was filed by the Cities of Gallup and Farmington, New Mexico.[1] On October 25, 1979, the Commission granted rehearing for the limited purpose of further consideration.

PNM maintains that the Commission's rejection of its tendered CWIP rates was improper. PNM states that if the Commission grants the company CWIP financial relief through 1982, as requested in prior dockets,[2] the company should not have to refile for CWIP in the future. Refiling, PNM asserts, would delay the financial relief that the company purportedly needs. PNM requests that the presently tendered CWIP rates remain on file until the Commission acts on the prior request for CWIP in rate base through 1982.

We find no need for rehearing concerning the rejection of PNM's rates. If the Commission grants PNM CWIP in rate base through 1982, or through some earlier date, the company, thereafter, could file modified rates based on full-CWIP through 1982, or such earlier date, without a *de novo* showing of financial distress. The rejection of PNM's rates at this stage, however, without a final Commission decision in the prior dockets or a *de novo* showing of financial need, is proper and will not cause any undue delay in the company's ability to obtain financial relief if such relief is warranted.

PNM also requests reconsideration of the Commission's summary disposition of the Accumulated Deferred Investment Tax Credit (ADITC) issue. The company argues that the balance of ADITC should earn a return at the rate approved for common equity rather than the overall rate of return as the Commission ordered in its suspension order. Additionally, PNM contends that even assuming the Commission assigned the correct rate to ADITC, the Commission erroneously eliminated the balance of deferred credits from the company's capitalization, effectively inflating its tax deduction related to long-term debt interest and improperly reducing its cost of service.[3]

---

[1] Filed September 27, 1979.

[2] This request for CWIP relief is currently pending in Docket Nos. ER78-337 and ER78-338.

[3] If ADITC is removed from common equity and eliminated from the company's capital structure, the proportionate composition of PNM's capital structure would change. The percentage of common equity would decrease while the ratios of long-term debt and preferred stock would increase. The

Footnotes continued on next page

The company has presented no new facts or legal arguments that would cause us to reconsider assigning an overall rate of return to ADITC.[4] The company's argument concerning the consequences of excluding ADITC from the capitalization, however, warrants further discussion. The issue raised involves the effect of eliminating ADITC from capitalization on the company's allowable taxes. PNM has chosen the second tax option contained in Section 46(f) of the Internal Revenue Code, namely, the ratable flow-through option contained in Section 46(f)(2). Under this alternative, a ratable portion of the outstanding ADITC may be reflected as a reduction to a utility's cost of service, but the credits may not be used to reduce the company's rate base. Under this second option, the Commission recognizes two ways of treating amounts of ADITC for purposes of constructing a suitable capital structure: (1) proportionate distribution of ADITC throughout the capital structure, or (2) elimination of ADITC from the capital structure. The portion of rate base financed by ADITC would earn the overall rate of return under either alternative.[5]

It is true, as PNM contends, that excluding ADITC from capitalization will increase its weighted cost of long-term debt. Assuming that weighted debt cost is used to derive a synchronized interest expense for computing the tax component of cost of service, the elimination of ADITC from capitalization would produce a greater interest deduction, a lower imputed tax expense, and a reduced cost of service as compared to retaining ADITC in capitalization. Under the tax alternative chosen by PNM, the company's cost of service may be reduced annually provided the reduction is not more rapid that ratable.[6] The question, here, is whether the Commission's treatment of ADITC balances, through an effect on interest expense, reduces PNM's cost of service by an amount greater than the ratable reduction.

We believe our exclusion of ADITC from capitalization does not improperly reduce cost of service. The company erroneously compares its tax expense and cost of service with ADITC removed from capitalization to its cost of service with ADITC in capitalization. A more appropriate comparison is one between the company's cost of service with ADITC out of the capital structure, on one hand, and on the other hand, what PNM's cost of service would have been if the investment tax credit were unavailable. The exclusion of ADITC from capitalization, coupled with a tax expense synchronized to weighted long-term debt cost, results in the same interest deduction that the company would have realized if none of its rate base had been financed by the tax credit. This means that, apart from the ratable reduction sanctioned by the tax laws, PNM's tax allowance will be neither lower *nor higher* than it would have been in the absence of the credit. The company's *pro forma* tax allowance will not be artifically reduced; it will simply match the appropriate capital structure relied upon in the rate of return, calculations.[7] From this perspective, the Commission's treatment of ADITC does not constitute use of ADITC to reduce PNM's cost of service beyond the amount permitted by Section 46(f)(2).[8]

Our ruling in this case is consistent with our disposition of the same issue in prior opinions. In Opinion No. 54, *Alabama Power Company*,[9] the Commission rejected Alabama's contention that if the typical interest synchronization formula is used for cost of service, the Commission should add ADITC to the capital structure in order to arrive at an appropriate weighted debt cost.[10] Our decision in *Carolina Power & Light Company*,[11] implicitly reached the same conclusion. In Opinion No. 19 the Commission sanctioned two specific ways of treating ADITC balances,[12] and it implicitly rejected other approaches; both alternatives specified in Opinion No. 19 have the same effect of setting the company's interest deduction at the same level that it would be without the investment tax credit. Our ruling in this docket confirms those prior decisions on the ADITC issue.

Gallup and Farmington request rehearing with regard to the Commission's decision that PNM is not required to meet the *Mobile-Sierra* burden of proof. The cities also request that PNM be required to pay all costs of refiling rates reflecting the required treatment of ADITC.

Gallup and Farmington have not shown any reason why we should reconsider the company's burden of proof with respect to its Section 206 filing in these dockets. We agree that the company should bear the costs of refiling its cost of service to reflect changes in ADITC treatment because the company tendered these instant rate increases after the Commission had summarily eliminated ADITC from common equity in several proceedings. PNM thus had notice of the Commission's policy toward the ADITC issue.

The Commission orders:

(1) PNM's application for rehearing and motion for reconsideration are hereby denied.

(2) The petition for rehearing filed by Gallup and Farmington is hereby granted to the extent that PNM shall bear costs of refiling in accordance with our summary disposition of the CWIP and ADITC issues.

(3) Except as provided in paragraph (2) above, the petition for rehearing filed by Gallup and Farmington is hereby denied.

Footnotes continued from last page increase in the proportionate amount of debt, in particular, would increase the weighted cost of debt. The Commission usually synchronizes weighted debt cost and rate base in order to compute the amount of interest deduction to be used in calculating the tax expense in a company's cost of service. Thus, an increase in the weighted cost of debt would effectively increase a company's imputed interest deduction and reduce its allowable tax expense.

[4] PNM contends that its situation is factually distinguishable from that in Opinion No. 19, *Carolina Power and Light Company, infra*, on the basis of an Internal Revenue Service information letter written to PNM and cited in Opinion No. 19. In Opinion No. 19, we discussed the limited weight to be accorded to such letters. We also noted that the conclusions expressed in the information letter appeared to contradict regulations which had been proposed in 1972 by the IRS. In fact, subsequent to the issuance of Opinion No. 19, the IRS formally promulgated those regulations which clearly sanction the Commission's decision to allow ADITC an overall rate of return. The new regulations under Section 46(f) of the Internal Revenue Code, 26 U.S.C. § 46(f), indicate that in considering whether ADITC has been used to reduce rate base: Reference shall be made to any accounting treatment that affects the permitted return on investment by treating the credit in any way other than as though it were capital supplied by common shareholders to which a cost of capital rate is assigned that is not less than the taxpayer's *overall cost of capital* rate. . . 26 CFR § 1.46-6(b)(3)(ii). (Emphasis added.)

[5] *Carolina Power & Light Company*, Opinion No. 19, issued August 2, 1978, p. 10.

[6] The IRS Regulations mention a reduction of tax expense as an example of a cost of service reduction. 26 CFR 1.46-6(b)(2)(ii).

[7] Of course, we only tentatively characterize the capital structure absent ADITC as the "appropriate" capital structure. It is conceivable that other unrelated adjustments to the capital structure will be advocated during the hearing, in which case further modifications might be warranted.

[8] The Company's inclusion of ADITC in capitalization would reduce cost of service by an amount that is less than the reduction permitted by Section 46(f)(2) of the Code. This result would give ratepayers less than their fair share of benefits from the tax credit.

[9] Docket No. E-8851, issued August 1, 1979.

[10] Alabama urged that together with synchronization failure to include ADITC in capitalization would attribute interest to interest free ADITC, artifically increasing interest expense.

The Commission concluded: In our opinion the Judge's determination of interest is proper and should not be modified because of ADITC. The staff and Judge have not included ADITC either in the capital structure or in the rate base, nor has it used ADITC to reduce the rate base as it would for other deferred taxes. Mimeo pp. 8-9.

[11] See note 5, *supra*.

[12] See discussion, p. 3, *supra*.

(4) The Secretary shall cause prompt publication of this order to be made in the Federal Register.

By the Commission.

Kenneth F. Plumb,

Secretary.

[FR Doc. 79-39770 Filed 12-28-79; 8:45 am]

BILLING CODE 6450-01-M

[Docket No. GP80-42]

Sea Robin Pipeline Co.; Notice of Third-Party Protests[1]

Issued: December 21, 1979.

Take notice that in accordance with the procedures established by the Federal Energy Regulatory Commission (Commission) in Order No. 23-B [2], and "Order on Rehearing of Order No. 23-B,"[3] the Staff of the Commission protested on October 26, 1979, the assertion by the Sea Robin Pipeline Company (Sea Robin) and certain producers that the contracts identified in its protest constitute contractual authority for the producers to charge and collect certain applicable maximum lawful prices under the Natural Gas Policy Act of 1978 (NGPA).

Staff stated that the language of the contracts identified Appendix A of this Notice does not constitute authority for the producers to increase prices to the extent claimed by Sea Robin in its evidentiary submission.

Take further notice that Gulf States Utilities (Gulf States) also filed a third-party protest on November 13, 1979. Gulf States contends that the contracts identified in Appendix B of this notice do not constitute the contractual authority for the producer to increase prices to the applicable NGPA maximum lawful price.

Take further notice that the associated Gas Distributors (AGD) also filed a third-party protest on October 24, 1979. AGD contends that the contracts identified in Appendix C of this notice do not constitute contractural authority for the producer to increase prices to the applicable NGPA maximum lawful price. The AGD protest has been adopted and incorporated into protests filed by the Gas Consumers Group, the Kansas State Corporation Commission, the Arizona Corporation Commission, and the Cities of Magnum, Oklahoma, and Winfield, Kansas.

Any person, other than the pipeline and the seller, desiring to be heard or to make any response with respect to these protests should file with the Commission, on or before January 4, 1980, a petition to intervene in accordance with 18 CFR 1.8. The seller need not file for intervention because under 18 CFR § 154.94(j)(4)(ii), the seller in the first sale is automatically joined as a party.

Kenneth F. Plumb,

Secretary.

Appendix A

Producer	Rate schedule No., or contract date
Amoco Production Co	746
Sonat Exploration Co	5-15-77
Texaco Inc	435
Pennzoil Louisiana & Texas Offshore	4
Pennzoil Louisiana & Texas Offshore	6
Pennzoil Oil & Gas Inc	7-2-76
Pennzoil Oil & Gas Inc	6-15-77
Gulf Oil co	430
Amoco Production Co	667
Offshore Co	1
Pennzoil Producing Co	271
Southern Natural Gas Co	8-26-68
Pennzoil Oil & Gas Inc	26
Pennzoil Oil & Gas Inc	27
Pennzoil Oil & Gas Inc	7-7-77
Pennzoil Oil & Gas Inc	7-7-77
Amoco Production Co	735
Mobil Oil Corp	522
Alminex USA Inc	7
Canadian Superior Oil, U.S., Ltd	6-19-78
General Crude Oil Co	12-15-78
Sabine Production Co	2-5-79
Superior Oil Co	203

Appendix B

Producer	Rate schedule No.	Contract date
Sonat Exploration Co	2	5-15-71
Sonat Exploration Co	2	7-25-77
Southland Royalty Co	38	6-20-77
Samedan Oil Co	CS	7-25-77
Newport Oil Co	CS	7-25-77
Amoco Production Co	746	8-3-77
Amoco Production Co	746	8-3-77
Pogo Producing Co	3	4-20-72
Pogo Producing Co. (Pennzoil Gas & Oil, Inc.).	1	4-20-72
Southern Natural Gas Co	F-12	4-26-62
Offshore Co	2	4-26-62
Amoco Production Co	674	7-7-72
Pennzoil Producing Co	287	7-26-72
Amoco Production Co	533	8-21-68
Amoco Production Co	533	8-21-68
Amoco Production Co	570	7-21-71
Texaco Inc	472	4-25-72
Amoco Production Co	533	8-21-68
Amoco Production Co	533	8-21-68
Amoco Production Co	570	7-21-71
Pogo Producing Co. (Pennzoil Oil & Gas Co.).	12	6-17-77
Pogo Producing Co. (Pennzoil Oil & Gas Inc.).	11	6-17-77
Pogo Producing Co. (Pennzoil Oil & Gas Inc.).	9	7-16-76
Pogo Producing Co. (Pennzoil Oil & Gas Inc.).	8	7-17-76
Pogo Producing Co. (Pennzoil Oil & Gas Inc.).	NA	7-2-76
Pogo Producing Co. (Pennzoil Oil & Gas Inc.).	13	7-2-76
Pennzoil Louisiana & Texas Offshore	4	1-7-77
Pennzoil Louisiana & Texas Offshore	4	1-7-77
Pogo Producing Co. (Pennzoil Oil & Gas Inc.).	19	6-15-77
Pennzoil Louisiana & Texas Offshore	6	6-15-77

Appendix B—Continued

Producer	Rate schedule No.	Contract date
Pennzoil Louisiana & Texas Offshore	6	6-15-77
Pogo Producing Co. (Pennzoil Oil & Gas Inc.).	20	6-15-77
Pennzoil Louisiana & Texas Offshore	5	6-15-77
Exxon Corp	601	9-6-77
Exxon Corp	508	1-29-71
Exxon Corp	507	12-27-71
Pogo Producing Co. (Pennzoil Oil & Gas Inc.).	NA	7-7-77
Pogo Producing Co. (Pennzoil Oil & Gas Inc.).	22	7-7-77
Pogo Producing Co. (Pennzoil Oil & Gas Inc.).	NA	7-7-77
Pogo Producing Co. (Pennzoil Oil & Gas Inc.).	23	7-7-77
Pennzoil Oil & Gas, Inc	26	7-7-77
Pennzoil Oil & Gas, Inc	27	7-7-77
Pennzoil Louisiana & Texas Offshore, Inc. (PLATO).	8	7-7-77
Pennzoil Louisiana & Texas Offshore, Inc. (PLATO).	8	7-7-77
Pennzoil Louisiana & Texas Offshore, Inc. (PLATO).	9	7-7-77
Pennzoil Louisiana & Texas Offshore, Inc. (PLATO).	9	7-7-77
Pennzoil Louisiana & Texas Offshore, Inc. (PLATO).	12	7-7-77
Pennzoil Louisiana & Texas Offshore, Inc. (PLATO).	13	7-7-77
ECEE, Inc	2	3-1-77
Pinto Inc	4	3-1-77
TBP Offshore Co		3-11-77
Cities Service Co	444	3-11-77
Pogo Producing Co. (Pennzoil Oil & Gas Inc.).	2	4-20-72
Mesa Offshore Co	CS	2-1-72
Mesa Offshore Co	CS	2-1-72
Mesa Offshore Co	CS	2-1-72
Mobil Oil Corp	509	9-20-70
Mobil Oil Corp	522	7-20-77
Mobil Oil Corp	522	7-20-77
Gulf Oil Corp	430	8-19-71
Gulf Oil Corp	430	8-19-71
Southern Natural Gas Co	F-9	8-26-68
Southern Natural Gas Co	F-9	8-26-68
Pennzoil Producing Co	271	8-26-68
Pennzoil Producing Co	271	8-26-68
Dixilyn Corp	CS	8-26-68
Offshore Co	1	8-26-68
Offshore Co	1	8-26-68
Amoco Production Co	667	10-24-68
Amoco Production Co	667	10-24-68
Crystal Exploration & Production Co	CS	10-15-68
Occidental Petroleum Corp	CS	11-10-69
Superior Oil Co	203	5-19-70
Superior Oil Co	203	5-19-70
Southland Royalty Co	93	7-10-70
Samedan Oil Corp	CS	9-22-70
Alminex USA, Inc	7	6-19-70
Alminex USA, Inc	7	6-19-70
Canadian Superior Oil US Ltd	NA	6-19-70
Sabine Production Co	CS	2-5-79
General American Oil Co. of Texas	Contract 409.	
Canadian Superior Oil USA Ltd	NA	6-19-70
Amoco Production Co	735	7-20-77
Amoco Production Co	735	7-20-77
Shell Oil Co	377	6-16-69
General Crude Oil Co	NA	12-15-70
General Crude Oil Co	NA	12-15-70
C & K Petroleum	CS	3-1-70
Pinto Inc	3	6-7-77
Southern Natural Gas Co	F-17	10-1-70
Mesa Offshore Co	CS	2-1-72

Appendix C

Producer	Rate schedule No. and contract date
Alminex U.S.A. Inc.	7/6-19-70
Aminoil U.S.A. *et al.*	154/1-14-69
Amoco Production Co.	553/8-21-68
Amoco Production Co.	667/10-24-68
Amoco Production Co.	570/7-21-71
Amoco Production Co.	674/7-7-72
Amoco Production Co.	735/7-20-77
Amoco Production Co.	746/8-3-77

---

[1] The term "third-party protest" refers to a protest filed by a party who is not a party to the contract which is protested.

[2] "Order Adopting Final Regulations and Establishing Protest Procedure," Docket No. RM79-22, issued June 21, 1979.

[3] Docket No. RM79-22, issued August 6, 1979.

Appendix C—Continued

Producer	Rate schedule No. and contract date
C & K Petroleum Inc.	CS/3-1-78
Canadian Surperior Oil U.S. Ltd.	NA/6-19-78
Chevron U.S.A. Inc.	51/7-1-69
Cities Service Co.	444/3-11-77
Crystal Exploration & Prod. Co.	CS/10-15-68
Dixilyn Corp.	1/8-26-68
Dixilyn Corp.	CS/11-4-68
Dixilyn Corp.	9/10-17-69
ECEE Inc.	2/3-1-77
Exxon Corp.	508/1-29-71
Exxon Corp.	507/2-1-72
Exxon Corp.	601/9-6-77
General American Oil Co. of Texas	409 (No date given)
General Crude Oil Co.	NA/12-15-78
Gulf Oil Corp.	430/8-19-71
Louisiana Land & Exploration Co.	4/10-23-69
Mesa Offshore Co. (blk. 228)	CS/2-1-72
Mesa Offshore Co. (blks. 270 & 30).	CS/2-1-72
Mobil Oil Corp.	509/9-20-76
Mobil Oil Corp.	522/1-28-77
Newport	CS/7-25-77
Occidental Petroleum Corp.	CS/11-10-69
Offshore Co.	1/8-26-68
Offshore Co.	287/7-26-72
Pennzoil La. & Texas Offshore	4/1-7-77
Pennzoil La. & Texas Offshore	6/6-15-77
Pennzoil La. & Texas Offshore	5/6-15-77
Pennzoil La. & Texas Offshore	12/7-7-77
Pennzoil La. & Texas Offshore	13/7-7-77
Pennzoil La. & Texas Offshore	8/7-7-77
Pennzoil Oil & Gas Inc.	26/7-7-77
Pennzoil Oil & Gas Inc.	27/7-7-77
Pennzoil Producing Co.	271/8-26-68
Pennzoil Producing co.	287/7-26-72
Pinto Inc.	4/3-1-77
Pinto Inc.	3 (No date given)
POGO Producing Co.	3/4-20-72
POGO Producing Co.	2/4-20-72
POGO Producing Co.	1/4-20-72
POGO Producing Co.	9/7-16-76
POGO Producing Co.	8/7-16-76
POGO Producing Co.	12/6-17-77
POGO Producing Co.	11/6-17-77
POGO Producing Co.	13/2-7-78
POGO Producing Co.	19/6-15-77
POGO Producing Co.	20/6-15-77
POGO Producing Co. *et al.*	NA/7-7-77
POGO Producing Co. *et al.*	NA/7-7-77
Sabine Production Co.	CS/9-9-76
Samedan Oil Corp.	CS/7-25-77
Samedan Oil Corp.	CS/9-22-78
Shell Oil Co.	377/7-16-69
Sid Richardson Carb & G. Co.	20/11-12-68
Sonat Exploration Co.	2/5-15-77
Southern Natural Gas Co.	F-9/8-26-68
Southern Natural Gas Co.	F-12/4-27-72
Southern Natural Gas Co.	F-17/10-1-76
Southland Royalty Co.	38/6-20-77
Southland Royalty Co.	93/7-18-78
Superior Oil Co.	203/5-19-78
TBP Offshore Company	—/3-29-77
Texaco Inc.	435/8-29-68
Texaco Inc.	449/10-3-69
Texaco Inc.	472/4-25-72

[FR Doc. 79-39794 Filed 12-28-79; 8:45 am]

BILLING CODE 6450-01-M

[Docket No. E-8570]

Southern California Edison Co.; Notice of Compliance Filing

December 20, 1979.

Take notice that Southern California Edison Company on October 12, 1979, pursuant to Commission Opinion No. 55, issued August 1, 1979, filed a revised cost of service. Edison Company indicates that the total resale rate of return at the filed rates would increase from 7.58% to 7.73%.

Any person desiring to be heard or to protest said filing should file protest with the Federal Energy Regulatory Commission, 825 North Capitol Street, N.E., Washington, D.C. 20426, in accordance with §§ 1.8 and 1.10 of the Commission's Rules of Practice and Procedure (18 CFR 1.8 and 1.10). All such protests should be filed on or before January 7, 1980. Protests will be considered by the Commission in determining the appropriate action to be taken. Copies of this filing are on file with the Commission and are available for public inspection.

Kenneth F. Plumb,

Secretary.

[FR Doc. 79-39778 Filed 12-28-79; 8:45 am]

BILLING CODE 6450-01-M

[Docket No. EL80-7]

Southeastern Power Administration v. Kentucky Utilities Co.; Notice of Application

December 21, 1979.

The Southeastern Power Administration (SEPA) on December 11, 1979, tendered for filing an application for an order under subsection (a) of Section 211 of the Federal Power Act directing Kentucky Utilities Company (KU) to provide certain transmission services pursuant to Sections 211 and 212 of the Federal Power Act to SEPA on reasonable terms and conditions.

SEPA indicates that it desires that KU be ordered to wheel the limited quantity of SEPA power which is available for sale to the municipalities of Barbourville, Bardstown, Benham, Corbin, Falmouth, Frankfort, Nicholasville and Paris, Kentucky.

Any person desiring to be heard or to protest said application should file a petition to intervene or protest with the Federal Energy Regulatory Commission, 825 North Capitol Street N.E., Washington, D.C. 20426, in accordance with §§ 1.8 and 1.10 of the Commission's Rules of Practice and Procedure (18 CFR 1.8, 1.10). All such petitions or protests should be filed on or before January 21, 1980. Protests will be considered by the Commission in determining the appropriate action to be taken, but will not serve to make protestants parties to the proceeding. Any person wishing to become a party must file a petition to intervene. Copies of this application are on file with the Commission and are available for public inspection.

Kenneth F. Plumb,

Secretary.

[FR Doc. 79-39769 Filed 12-28-79; 8:45 am]

BILLING CODE 6450-01-M

[Docket No. CP80-100]

Tennessee Gas Pipeline Co., a Division of Tenneco, Inc.; Notice of Application

December 21, 1979.

Take notice that on November 21, 1979, Tennessee Gas Pipeline Company, a Division of Tenneco Inc. (Applicant), P.O. Box 2511, Houston, Texas 77001, filed in Docket No. CP80-100 an application pursuant to Section 7(c) of the Natural Gas Act for a certificate of public convenience and necessity authorizing the transportation of natural gas for Transcontinental Gas Pipe Line Corporation (Transco), all as more fully set forth in the application which is on file with the Commission and open to public inspection.

Applicant proposes to render a transportation service for Transco pursuant to an agreement with Transco dated October 29, 1979, to assist Transco in receiving gas into its system which Transco would purchase from Sulpetro Limited of Calgary, Province of Alberta, Canada. It is said that Transco would cause volumes of gas to be delivered to Applicant at a point on the United States-Canada boundary near Niagara Falls, Ontario, where Applicant's pipeline system interconnects with the facilities of TransCanada PipeLines Limited.

Applicant states it would accept up to 37,500 Mcf per day and transport and deliver such quantities, less volumes retained for Applicant's fuel use requirement, for the account Transco (1) at an existing interconnection between the systems of Applicant and Consolidated Gas Supply Corporation (Consolidated) in Erie County, New York, (2) at an interconnection between the systems of Applicant and Transco in Bergen County, New Jersey, and (3) at other existing interconnections between the systems of Applicant and Consolidated and Applicant and Transco, as mutually agreed to.

It is stated that for this transportation service, Transco would pay Applicant the aggregate of a monthly demand charge of 14.0 cents per Mcf times the transportation quantity and a volume charge of 11.43 cents per Mcf for gas delivered to the Bergen County point of delivery and 1.77 cents per Mcf for gas delivered to all other points. It is further stated that Applicant would retain 3.65 percent of the volumes delivered to Bergen County and 1.2 percent of the volumes delivered to the other points for fuel uses.

Any person desiring to be heard or to make any protest with reference to said application should on or before January 15, 1980, file with the Federal Energy

Regulatory Commission, Washington, D.C. 20426, a petition to intervene or a protest in accordance with the requirements of the Commission's Rules of Practice and Procedure (18 CFR 1.8 or 1.10) and the Regulations under the Natural Gas Act (18 CFR 157.10). All protests filed with the Commission will be considered by it in determining the appropriate action to be taken but will not serve to make the protestants parties to the proceeding. Any person wishing to become a party to a proceeding or to participate as a party in any hearing therein must file a petition to intervene in accordance with the Commission's Rules.

Take further notice that, pursuant to the authority contained in and subject to jurisdiction conferred upon the Federal Energy Regulatory Commission by Sections 7 and 15 of the Natural Gas Act and the Commission's Rules of Practice and Procedure, a hearing will be held without further notice before the Commission or its designee on this application if no petition to intervene is filed within the time required herein, if the Commission on its own review of the matter finds that a grant of the certificate is required by the public convenience and necessity. If a petition for leave to intervene is timely filed, or if the Commission on its own motion believes that a formal hearing is required, further notice of such hearing will be duly given.

Under the procedure herein provided for, unless otherwise advised, it will be unnecessary for Applicant to appear or be represented at the hearing.

Kenneth F. Plumb,

Secretary.

[FR Doc. 79-39722 Filed 12-28-79; 8:45 am]

BILLING CODE 6450-01-M

[Docket No. CP80-109]

Transcontinental Gas Pipe Line Corp.; Notice of Application

December 21, 1979.

Take notice that on November 29, 1979, Transcontinental Gas Pipe Line Corporation (Applicant), P.O. Box 1396, Houston, Texas 77001, filed in Docket No. CP80-109 an application pursuant to Section 7(c) of the Natural Gas Act for a certificate of public convenience and necessity authorizing: (1) the construction and operation of facilities to take into its certificated system supplies of natural gas for the account of United Gas Pipe Line Company (United), and (2) the transportation of natural gas on an interruptible basis for United, all as more fully set forth in the application on file with the Commission and open to public inspection.

Applicant states that United would acquire up to 1,400 dekatherms (dt) equivalent of natural gas per day from various wells in Hardin County, Texas, and would arrange to have said gas delivered to Applicant at mile post 407.71 on Applicant's 30-inch main line in Hardin County, Texas, where facilities of United and Applicant would interconnect. It is said that in order to receive said gas, Applicant would construct and operate a tap, valve, metering and regulating station and other appurtenances. United, it is said, would reimburse or cause Applicant to be reimbursed for the installed cost of said facilities, which is estimated to be $24,500.

Applicant states further that it would redeliver thermally equivalent quantities, less quantities retained for compressor fuel and line loss make-up, to United at existing points of interconnection between Applicant and United in Calcasieu Parish, Louisiana, (Starks), Victoria County, Texas (Victoria), or any other mutually agreeable interconnection between the systems of Applicant and United. It is asserted that for said transportation service, Applicant initially would receive 3.5 cents per dt equivalent of gas transported. It is further stated that in addition, Applicant would initially retain 0.6 percent of the quantities received for transportation to Starks for compressor fuel and line loss make-up. No retention of gas would be required for deliveries to Victoria. Applicant states that the subject transportation service would remain in effect for a primary term of one year and from year-to-year thereafter pursuant to the transportation agreement dated July 23, 1979, between Applicant and United.

Any person desiring to be heard or to make any protest with reference to said application should on or before January 15, 1980, file with the Federal Energy Regulatory Commission, Washington, D.C. 20426, a petition to intervene or a protest in accordance with the requirements of the Commission's Rules of Practice and Procedure (18 CFR 1.8 or 1.10) and the Regulations under the Natural Gas Act (18 CFR 157.10). All protests filed with the Commission will be considered by it in determining the appropriate action to be taken but will not serve to make the protestants parties to the proceeding. Any person wishing to become a party to a proceeding or to participate as a party in any hearing therein must file a petition to intervene in accordance with the Commission's Rules.

Take further notice that, pursuant to the authority contained in and subject to jurisdiction conferred upon the Federal Energy Regulatory Commission by Sections 7 and 15 of the Natural Gas Act and the Commission's Rules of Practice and Procedure, a hearing will be held without further notice before the Commission or its designee on this application if no petition to intervene is filed within the time required herein, if the Commission on its own review of the matter finds that a grant of the certificate is required by the public convenience and necessity. If a petition for leave to intervene is timely filed, or if the Commission on its own motion believes that a formal hearing is required, further notice of such hearing will be duly given.

Under the procedure herein provided for, unless otherwise advised, it will be unnecessary for Applicant to appear or be represented at the hearing.

Kenneth F. Plumb,

Secretary.

[FR Doc. 79-39791 Filed 12-28-79; 8:45 am]

BILLING CODE 6450-01-M

[Docket No. CP80-133]

Trunkline Gas Co.; Notice of Application

December 21, 1979.

Take notice that on December 12, 1979, Trunkline Gas Company (Applicant), P.O. Box 1642, Houston, Texas 77001, filed in Docket No. CP80-133 an application pursuant to Section 7(c) of the Natural Gas Act and Section 284.221 of the Commission's Regulations under the Natural Gas Policy Act of 1978 (NGPA) for a certificate of public convenience and necessity for blanket authorization to transport natural gas on behalf of other interstate pipeline companies, all as more fully set forth in the application which is on file with the Commission and open to public inspection.

Applicant requests blanket authorization to transport natural gas for other interstate pipeline companies for terms of up to two years. It states that it would comply with Section 284.221(d) of the Commission's Regulations under the NGPA.

Any person desiring to be heard or to make any protest with reference to said application should on or before January 4, 1980, file with the Federal Energy Regulatory Commission, Washington, D.C. 20426, a petition to intervene or a protest in accordance with the requirements of the Commission's Rules of Practice and Procedure (18 CFR 1.8 or 1.10) and the Regulations under the

Natural Gas Act (18 CFR 157.10). All protests filed with the Commission will be considered by it in determining the appropriate action to be taken but will not serve to make the protestants parties to the proceeding. Any person wishing to become a party to a proceeding or to participate as a party in any hearing therein must file a petition to intervene in accordance with the Commission's Rules.

Take further notice that, pursuant to the authority contained in and subject to jurisdiction conferred upon the Federal Energy Regulatory Commission by Sections 7 and 15 of the Natural Gas Act and the Commission's Rules of Practice and Procedure, a hearing will be held without further notice before the Commission or its designee on this application if no petition to intervene is filed within the time required herein, if the Commission on its own review of the matter finds that a grant of the certificate is required by the public convenience and necessity. If a petition for leave to intervene is timely filed, or if the Commission on its own motion believes that a formal hearing is required, further notice of such hearing will be duly given.

Under the procedure herein provided for, unless otherwise advised, it will be unnecessary for Applicant to appear or be represented at the hearing.

Kenneth F. Plumb,

Secretary.

[FR Doc. 79-39788 Filed 12-28-79; 8:45 am]

BILLING CODE 6450-01-M

[Docket No. ER80-136]

Vermont Electric Power Co., Inc.; Rate Schedule Filing

December 21, 1979.

The filing Company submits the following:

Take notice that on December 17, 1979, Vermont Electric Power Company, Inc. (VELCO) tendered for filing a Rate Schedule containing a Unit Contract between VELCO and the Municipal Light Commission of the City of Taunton (TAUNTON) of Taunton, Massachusetts, dated as of February 9, 1979.

VELCO states that the service to be rendered under this Rate Schedule consists of the sale of capacity and related energy from the Vermont Yankee Unit for the monthly amounts and periods as follows:

	Mar. 1 to 31, 1980	Apr. 1 to Oct. 31, 1980	May 1 to Oct. 31, 1981
KW	2,000	8,000	8,000
KWH	1,100,000	4,400,000	4,400,000
Charges	$22,000	$88,000	$88,000

Charges for this power will be at VELCO's costs. Therefore, there will be no change in the overall rate of return of VELCO.

VELCO states that service under this Rate Schedule will commence on March 1, 1980, and will terminate on October 31, 1981.

Copies of the filing were served upon the Municipal Light Commission of the City of Taunton and the Vermont Public Service Board.

Any person desiring to be heard or to protest said application should file a petition to intervene or protest with the Federal Energy Regulatory Commission, 825 North Capitol Street, N.E., Washington, D.C. 20426, in accordance with §§ 1.8 and 1.10 of the Commission's Rules of Practice and Procedure (18 CFR 1.8, 1.10). All such petitions or protests should be filed on or before January 14, 1980. Protests will be considered by the Commission in determining the appropriate action to be taken, but will not serve to make protestants parties to the proceeding. Any person wishing to become a party must file a petition to intervene. Copies of this application are on file with the Commission and are available for public inspection.

Kenneth F. Plumb,

Secretary.

[FR Doc. 79-39790 Filed 12-28-79; 8:45 am]

BILLING CODE 6450-01-M

Office of Assistant Secretary for International Affairs

Proposed Subsequent Arrangement

Pursuant to Section 131 of the Atomic Energy Act of 1954, as amended (42 U.S.C. 2160), notice is hereby given of a proposed "subsequent arrangement" under the Additional Agreement Between the Government of the United States of America and the European Atomic Energy Community (EURATOM) Concerning the Peaceful Uses of Atomic Energy, and the Agreement for Cooperation Between the Government of the United States of America and the Government of Sweden.

The subsequent arrangement to be carried out under the above mentioned agreement involves approval of the following retransfer:

RTD/EU(SW)-49, transfer from Sweden to West Germany, 2,427.884 kilograms Uranium, containing 34.813 kilograms U-235 (1.434%) for scrap recovery at Nukem, Hanau, to be used for feed for enrichment in Department of Energy facilities.

In accordance with Section 131 of the Atomic Energy Act of 1954, as amended, it has been determined that approval of this retransfer will not be inimical to the common defense and security.

This subsequent arrangement will take effect no sooner than January 15, 1980.

For the Department of Energy.

Dated: December 21, 1979.

James P. Morris,

Acting Director for Nuclear Affairs, International Nuclear and Technical Programs.

[FR Doc. 79-39750 Filed 12-28-79; 8:45 am]

BILLING CODE 6450-01-M

Proposed Subsequent Arrangements

Pursuant to section 131 of the Atomic Energy Act of 1954, as amended (42 U.S.C. 2160) notice is hereby given of proposed "subsequent arrangements" under the Additional Agreement Between the Government of the United States of America and the European Atomic Energy Community (EURATOM) Concerning the Peaceful Uses of Atomic Energy, and the Agreement for Cooperation Between the Government of the United States of America and the Government of Sweden.

The subsequent arrangements to be carried out under the above mentioned agreements involve approval of the following retransfer:

RTD/SW(EU)-107 tranfer from West Germany to Sweden of fuel rods containing 3,542 grams Uranium, with 102.6 grams of U-235 (2.90%) for irradiation in the R-2 research reactor.

In accordance with section 131 of the Atomic Energy Act of 1954, as amended, it has been determined that approval of this retransfer will not be inimical to the common defense and security.

This subsequent arrangement will take effect no sooner than January 15, 1980.

For the Department of Energy.

Dated: December 21, 1979.

James P. Morris,

Acting Director for Nuclear Affairs, International Nuclear and Technical Programs.

[FR Doc. 79-39749 Filed 12-28-79; 8:45 am]

BILLING CODE 6450-01-M

Office of Hearings and Appeals

Issuance of Decisions and Orders; Week of August 20 through August 24, 1979

Notice is hereby given that during the week of August 20 through August 24, 1979, the Decisions and Orders summarized below were issued with respect to Appeals and Applications for Exception or other relief filed with the

Office of Hearings and Appeals of the Department of Energy. The following summary also contains a list of submissions which were dismissed by the Office of Hearings and Appeals and the basis for the dismissal.

Appeals

Happy Valley Exxon, Lochgelly, W. Va., DEA-0483, motor gasoline

Happy Valley Exxon filed an Appeal from an Assignment Order which was issued to the firm by DOE Region III. In its Appeal, Happy Valley maintained that the volume of motor gasolene which was assigned to the firm was based upon errors of fact and law. In considering the Appeal, the DOE found that the Assignment Order was factually correct and that the Order had been issued in conformance with guidelines which the ERA had promulgated with respect to such matters. Accordingly, the Appeal was denied.

National Distillers and Chemical Corp., Washington, D.C., DFA-0556, Freedom of Information

National Distillers & Chemical Corporation filed an Appeal from a partial denial by the Assistant Administrator for Enforcement of the Economic Regulatory Administration of a Request for Information which the firm had submitted under the Freedom of Information Act (the FOIA). In considering the Appeal, the DOE found that the Assistant Administrator acted correctly in withholding an intra-agency memorandum under Exemption 5 of the FOIA. The DOE also determined that the document does not contain segregable and releasable factual material and that the public interest does not favor its release. Accordingly, the Appeal was denied.

National Helium Corp., Washington, D.C., DFA-0503, Freedom of Information

National Helium Corporation filed an Appeal from a partial denial by the Director of Freedom of Information and Privacy Acts Activities of a Request for Information which the firm had submitted under the Freedom of Information Act (the FOIA). In considering the Appeal, the DOE found that the Director had acted correctly in withholding under Exemption 5 certain of the documents which were initially requested. The DOE also determined that none of these documents contain segregable, factual material which should be released and that the public interest does not favor release of the documents. Accordingly, the Appeal was denied.

Requests for Exception

Glickman, Inc., McPherson County, Kans. DEE-2211, crude oil

Glickman, Inc. filed an Application for Exception from the provisions of 10 CFR, Part 211, Subpart D, in which the firm sought permission to sell the crude oil produced from the Brock Lease, located in McPherson County, Kansas, at upper tier ceiling prices. In considering the request, the DOE found that exception relief was necessary to provide the applicant with an economic incentive to continue production at the Brock Lease.

Beatrice Smolen, Los Angeles, Calif., DEE-7548, temperature restriction

Beatrice Smolen filed an Application for Exception from the provisions of 10 CFR, Part 490 in which she sought permission for her employer to lower its office temperature to 70°F. In considering the request, the DOE found that exception relief was necessary to stabilize Mrs. Smolen's medical condition. Accordingly, exception relief was granted.

United Refining Co., Warren, Pa., DEL-0267; DES-0267 motor gasoline

United Refining Company filed an Application for Exception from the provisions of 10 CFR 212.83(c)(1)(B) in which the firm sought to market Gasohol as a separate category and grade of gasoline for purposes of passing through the cost of alcohol components of that gasoline. In considering the request, the DOE found that exception relief was necessary to provide the firm with an economic incentive to market Gasohol. Accordingly, exception relief was granted.

Requests for Stay

Harvey J. Bean, Erie, Pa., DRS-0274; DRS-0301 motor gasoline

Harvey J. Bean filed Applications for Stay from the requirement that he reduce his retail selling prices for motor gasoline pursuant to two Interim Remedial Orders for Immediate Compliance issued by the Northeast District of the Office of Enforcement of the ERA. In considering the Applications, the DOE determined that in view of a recent change in the regulation, Bean would be unable to charge a substantial portion of his maximum lawful selling prices if he were required to comply with the provisions of the IROICs. Bean's stay requests were therefore granted.

Exxon Co., U.S.A., Houston, Tex., DRS-0570, crude oil

Exxon Company, U.S.A. filed an Application for Stay from an Ancillary Order which was issued to the firm by the Southwest Enforcement District of the ERA. In the order, the Southwest District directed Exxon to withhold a portion of the production and sales revenues from the G. Maberry property and to remit this amount to the ERA. In considering the Application, the DOE determined that the granting of a Stay pending consideration of an ancillary order is analogous to a remedial order, and that Exxon's Appeal would be consistent with DOE precedent regarding remedial orders. Exxon's stay request was therefore granted.

Interim Orders

G. W. Tinnin; Petro-Wash, Inc.; National Association of Texaco Wholesalers, Inc., Atlanta, Ga., DEN-0004, motor gasoline

G. W. Tinnin, Petro-Wash, Inc., and the National Association of Texaco Wholesalers, Inc. filed an Application for Temporary Exception from the provisions of 10 CFR, Part 211, in which the firms sought an increased allocation of motor gasoline for themselves and for two classes of wholesale purchaser-resellers. In considering the request, the DOE found that the firms had failed to satisfy the criteria for temporary exception relief set forth in 10 CFR 205.125(b). Accordingly, temporary exception relief was denied.

The following firms were granted Interim Exception relief which implements the relief which the DOE proposed to grant in an order issued on the same date as the Interim Order:

Company Name, Location, and Case No.

Sierra Army Depot Post Restraurant, Herlong, CA—DEN-4363
Glenn Dobbs Oil Co., Collinsville, OK—DEN-4211
White Oil Distributors, Dallas, TX—DEN-3853
Checker Cab Company, Las Vegas, NV—DEN-2847

Petitions Involving the Motor Gasoline Allocation Regulations

The following firms filed Applications for Exception, Stay, and/or Temporary Stay from the provisions of the Motor Gasoline Allocation Regulations. The requests, if granted, would result in an increase in the firms' base period allocation of motor gasoline. The DOE issued Decisions and Orders which determined that the requests be granted:

Company Name, Location, and Case No.

State of New Jersey (N.J. Highway Authority), New Jersey—DEE-7485, DXE-7169
Callotex Delaware, Inc., Middletown, DE—DEE-5222

The following firms filed Applications for Exception from the provisions of the Motor Gasoline Allocation Regulations. The requests, if granted, would result in an increase in the firms' base period allocation of motor gasoline. Since there were no objections filed, the DOE issued a Decision and Order which finalized the Proposed Decision and Order issued in each case:

Company Name and Case No.

AIA Exxon—DEE-2426
Airport Exxon—DEE-2939
Alamo Expressway Service Station—DEE-2750
B & O Shell Service—DEE-2553
Bassett's 66 Service—DEE-4510
Bill's Amoco—DEE-3685
Bingo Exxon—DEE-2726
Bird Road Exxon Service Center—DEE-3289
Boggs Exxon—DEE-3105
Brentwood Exxon—DEE-2363
Bud Wolfe's Arco Mini Market—DEE-3397
C & B Exxon—DEE-4520
Caldwells Service—DEE-3291
Castro Valley Enterprises—DEE-3049
Chapman, Kenneth—DEE-3805
Cheatham Oil Company—DEE-5597
Circle S Service—DEE-2531
Colonial Shell Service, Inc.—DEE-3259
Colony West Gulf—DEE-4579
Corondolet Corp.—DEE-2943
Corvo's Service Station—DEE-2730
Crest Int'l Petroleum Corp.—DEE-2450
Dauphin & Sage Shell—DEE-2543
Deacon Corner Service Station—DEE-2278
Degrood Bulk Oil—DEE-2827
Du-Cor Service Station—DEE-2828
Dupont Arco—DEE-5357
Ellett, Charles F.—DEE-4181
Farel Little Oil Company, Inc.—DEE-2627
Food, Inc.—DEE-3094
Gallian Tire Company—DEE-2430
George Adamian Texaco—DEE-6521
Givan's Exxon—DEE-3116

Glover Oil Company—DEE-2534
Gottlier Corporation—DEE-2269
Hampton Park Exxon—DEE-2732
Holiday Foods, Inc.—DEE-3752
Hondo Oil Company, Inc.—DEE-2782
Hull Oil Company—DEE-4200
J & B Automotive—DEE-3783
John & Sharon Volk's Arco—DEE-3760
Johnson's Arco Mini Market—DEE-3939
Keahey's Friendly Service—DEE-3209
Kenwood Citgo Station—DEE-2582
Kimmick Oil Company—DEE-2634
Manchester Shell—DEE-3541
Marblehead Services, Inc.—DEE-2471
Marina Carwash—DEE-3476
Mason Valley Petroleum Dealers—DEE-5144
Matthews Exxon—DEE-2456
McDaniels Grocery & Meat Market—DEE-5933
Olsen, Melvin—DEE-3227
Peck's Arco Mini Market—DEE-5911
Pensacola Petroleum Company—DEE-3030
Petco Oil Company, Inc.—DEE-4042
Pine Grove Exxon—DEE-5051
Port Oil Company, Inc.—DEE-2867
Priebe Bros. Oil Company—DEE-2266
Rapid Service Oil—DEE-2373
Reeves, Ray W.—DEE-3550
Rex Oil Company—DEE-2418
River Oil Company—DEE-2348
Rocket Oil Company—DEE-5056
S & S Petroleum Sales—DEE-3335
Sav-Mor Oil Company—DEE-3170
Sea Shell Car Wash—DEE-2823
Skip's Mobil—DEE-2510
Steve's Gulf Service—DEE-2574
Strother, R. C.—DEE-2301
Terry's Mobil—DEE-2900
Tom's Village Arco—DEE-3181
Tucson Fuel Company, Inc.—DEE-2557
Visch's Chevron Service—DEE-2813
W. Broward Phillips "66" Service—DEE-2991
Walters North Bellmore—DEE-3344
Woody's Truck Stop—DEE-3823
Yosemite Gas & Oil—DEE-3345
Zarda Brothers Dairy, Inc.—DEE-5747

Dismissals

The following submissions were dismissed without prejudice to refiling at a later date:

Company Name and Case No.

B. J. E. Car Wash—DEE-4196; DES-4196
Desbiens Automotive Towing—DEE-2402; DES-2402
Holiday Oil Company—DEE-4119
Old Fort Exxon—DEE-4571
Marathon Oil Company—DST-0508 through DST-0516
Blakely's Automotive—DEE-5247
Brook Plaza Exxon—DEE-6305; DES-6305; DST-6305
Carl's Service—DEE-5244
Charlie's Amoco—DEE-6500
E-Z Shop, Inc.—DEE-4599
Jim's Pine St. Mobil—DEE-4917
John C. Resetar—DEE-7766
Max Oil Company—DEE-6335
Patrick J. Nugent—DEE-5147
Arie's Arco—DEE-6804
Atlantic Richfield—DEE-0320
Richard Cox Arco—DEE-7173
Rose's Oil Service—DEE-7293
Scott's Mini-Market—DEE-7480; DES-7480
T. C. Williams Oil—DEE-3055
Talbot Perkins Children's Services—DEE-7753
Cooper Ltd.—DEE-6672
Domenico Natale—DEE-5630
Ernest J. Short & Son—DEE-3093
L. A. Legg & Co.—DEE-7616
Marathon Oil Company—DES-0471; DST-0471; DES-0473; DST-0473; DES-0474 through DES-0477; DST-0474 through DST-0477; DES-0478; DST-0478; DES-0479; DST-0479; DES-0481; DST-0481; DES-0492; DST-0492
A & M Pet. Co.—DEE-3032; DST-3032
Abraham Oil Company—DEE-6574
C. J. Holt—DEE-6213
Carson Mini Market—DEE-4649; DES-4649
Clark's Exxon—DEE-6520
Draper Fuel Co., Inc.—DEE-7710
Earl E. Wall—DXE-2095
Energy Decisions, Inc.—DEE-6714; DES-6714
Howie's Oil, Inc.—DEE-2767
J. R. Sousa & Sons—DEE-0502
Kobeissi Automotive—DEE-7477
Maxwell Enterprises—DEE-6246
Pioneer Companies—DEE-4973
Cedar Bluff Gulf—DEE-6634
Charles F. Argon & Co.—DEE-5749
Cincinnati Yellow Cab—DEE-6861
Dodge City Public Library—DEE-7691
Donald P. Landry—DEE-5545
State of Connecticut—DEE-6918
West Virginia Dept. of Culture and History—DEE-7648
Nault Tire & Battery Shop—DEE-5659
Ridgewood Shell—DEE-6670

Copies of the full text of these Decisions and Orders are available in the Public Docket Room of the Office of Hearings and Appeals, Room B-120, 2000 M Street, N.W., Washington, D.C. 20461, Monday through Friday, between the hours of 1:00 p.m. and 5:00 p.m., e.s.t., except Federal holidays. They are also available in *Energy Management: Federal Energy Guidelines*, a commercially published loose leaf reporter system.

Melvin Goldstein,
Director, Office of Hearings and Appeals.
December 18, 1979.

[FR Doc. 79-39747 Filed 12-28-79; 8:45 am]
BILLING CODE 6450-01-M

ENVIRONMENTAL PROTECTION AGENCY

[FRL 1381-6]

Comments on Environmental Impact Statements

AGENCY: Environmental Protection Agency (EPA), Office of Environmental Review (A-104).

ACTION: Public Notice of EPA comments on environmental impact statements.

SUMMARY: Pursuant to section 309(b) of the Clean Air Act, when EPA determines a Federal agency action is unsatisfactory from the standpoint of health, welfare, or environmental quality, such determination should be published and the action referred to the Council on Environmental Quality (CEQ). The purpose of this notice is to inform the public of EPA's section 309(b) determination on the Federal Highway Administration (FHWA) project relating to the final design of the Connecticut portions of I-84 between Hartford, Connecticut and Providence, Rhode Island.

FOR FURTHER INFORMATION CONTACT: William Hedeman, Office of Environmental Review (A-104), EPA, 401 M Street, S.W., Washington, D.C. 20460; telephone 202/755-0777; or William Adams, Regional Administrator, Region I, EPA, JFK Federal Building, Boston, Massachusetts; telephone 617/223-7210.

INFORMATION: EPA reviewed the final environmental impact statements (EISs) prepared by FHWA to proceed with final design of the Connecticut portions of I-84 between Hartford and Providence and determined that the Connecticut portions of I-84 would result in traffic and development with environmentally unsatisfactory degradation and risk to the Scituate Reservoir, which is the major supply of drinking water for Rhode Island. EPA also found that the FHWA's segmental approach to past and current environmental assessment has precluded adequate analysis of the impacts which a project in Connecticut can have in Rhode Island. Furthermore, EPA found that this road is likely to spur development in eastern Connecticut and that the final EIS did not adequately consider the impacts of such development.

EPA notified the Department of Transportation that, because this proposal is environmentally unsatisfactory, the matter will be referred to CEQ pursuant to section 309(b). EPA requested that no action be taken to implement his decision until CEQ acts on this referral. EPA also requested that the approval of two of the there EIS's on I-84 be revoked. (EPA did not object to the I-86/I-84 connector in East Hartford). EPA asked for an overview EIS analyzing alternative corridors in Connecticut which would facilitate development of a Rhode Island corridor which would avoid the watershed. Finally, EPA recommended that this analysis be conducted in light of the President's August 2, 1979 memorandum to the Secretary of Transportation. That memo directed the Secretary to reorient DOT's program and projects to promote energy conservation, to discourage urban sprawl, to rehabilitate existing transportation facilities to strengthen the urban cores, and to mitigate the

adverse impacts of transportation projects on the environment.

Dated: December 26, 1979.

William N. Hedeman, Jr.,

Director, Office of Environmental Review.

[FR Doc. 79-39721 Filed 12-28-79; 8:45 am]

BILLING CODE 6560-01-M

FEDERAL COMMUNICATIONS COMMISSION

[BC Docket No. 79-330, File No. BPH-10911, et al.]

Broadcast Management, Inc., et al.

In re Applications of Broadcast Management, Incorporated, Durango, Colorado. Req: 100.3 MHz, Channel No. 267, 100 kW (H&V), 290 feet (H&V) (BC Docket No. 79-330, File No. BPH-10911); M.M.G. Broadcasting Corporation, Durango, Colorado. Req: 101.3 MHz, Channel No. 267, 100 kW (H&V), 446 feet (H&V) (BC Docket No. 79-331, File No. BPH-11104); Mountain States Broadcasting Investments Corporation, Durango, Colorado. Req: 101.3 MHz, Channel No. 267, 100 kW (H&V), 439 feet (H&V) (BC Docket No. 79-332, File No. BPH-11121); Hosanna Christian Broadcasting, Inc., Durango, Colorado. Req: 100.3 MHz, Channel No. 267, 100 kW (H&V), 289.5 feet (H&V) (BC Docket No. 79-333, File No. BPH-780831AE); For Construction Permit; Hearing Designation order designating applications for consolidated hearing on stated issues.

Adopted: December 14, 1979.

Released: December 20, 1979.

By the Chief, Broadcast Bureau:

1. The Commission by the Chief, Broadcast Bureau, acting pursuant to delegaed authority, has under consideration the above mutually exclusive applications for a new FM broadcast station at Durango, Colorado.

2. Hosanna Christian Broadcasting, Inc. relies upon pledges of real property to meet construction and operating expenses. It has not, however, documented the fair market value of this property, making the property unacceptable as a source of funding. An appropriate financial issue will therefore be specified. An issue will also be specified to permit inquiry into the applicant's failure to meet the local notice requirements of § 73.3580 of our Rules.

3. Broadcast Management, Incorporated proposes to duplicate some of the programming of its commonly owned station, KDGO-AM. Therefore, evidence regarding program duplication will be admissible under the standard comparative issue. When duplicated programming is proposed, the showing permitted is limited to evidence concerning the benefits to be derived from the proposed duplication which would offset its inherent inefficiency. *Jones T. Sudbary*, 8 FCC 2d 360, 10 RR 2d 114 (1967).[1]

4. Data submitted by the applicants indicate that there would be a significant difference in the size of the areas and populations which would receive service from the proposals. Consequently, for the purpose of comparison, the areas and populations which would receive FM service of 1 mV/m or greater intensity, together with the availability of other primary aural services in such areas, will be considered under the standard comparative issue, for the purpose of determining whether a comparative preference should accrue to any of the applicants.

5. The petition for leave to amend filed on August 13, 1979, by Mountain States Broadcasting Investments Corporation was submitted pursuant to § 1.65 of our Rules and will be granted. As for the amendment itself, which reports the sale by Mountain States' parent corporation of other broadcast interests, while it was filed shortly after the "amendment as of right" deadline had passed,[2] the information which it contains was also reported by letter on the deadline date. Under these circumstances—i.e. the approval and consummation of a transfer being reported on the amendment date in a specific if not formal manner—we think it appropriate to permit consideration of the formal amendment in the comparative analysis of the proposals. Compare *Henderson Radio, Inc.*, BC-17764, released May 25, 1979 (Ownershi change first reported seven months after amendment deadline not considered in comparative analysis).

6. Except as indicated above, the applicants are qualified to construct and operate as proposed. However, as the proposals are mutually exclusive they must be designated for hearing.

7. Accordingly, IT IS ORDERED, That pursuant to section 309(e) of the Communications Act of 1934, as amended, the applications ARE DESIGNATED FOR HEARING IN A CONSOLIDATED PROCEEDING, at a time and place to be specified in a subsequent Order, upon the following issues:

1. To determine with respect to the application of Hosanna Christian Broadcasting, Inc., the source and availability of funds to meet construction and operating expenses.

2. To determine whether Hosanna Christian Broadcasting, Inc., complied with the Commission's public notice requirements and, if not, the effect thereof on the applicant's basic and/or comparative qualifications.

3. To determine which of the proposals would, on a comparative basis, best serve the public interest.

4. To determine in light of the evidence adduced pursuant to the foregoing issues which of the applications should be granted.

8. It is further ordered, That the petition for leave to amend filed by Mountain States Broadcasting Investments Corporation is granted, and the related amendment is accepted.

9. It is further ordered, That, to avail themselves of the opportunity to be heard, the applicants herein shall, pursuant to § 1.221(c) of the Commission's Rules, in person or by attorney, within 20 days of the mailing of this Order, file with the Commission in triplicate a written appearance stating an intention to appear on the date fixed for the hearing and to present evidence on the issues specified in this Order.

10. It is further ordered, That the applicants herein shall, pursuant to Section 311(a)(2) of the Communications Act of 1934, as amended, and § 73.3594 of the Commission's Rules, give notice of the hearing (either individually or, if feasible and consistent with the Rules, jointly) within the time and in the manner prescribed in such Rule, and shall advise the Commission of the publication of such notice as required by § 73.3594(g) of the Rules.

Federal Communications Commission.

Richard J. Shiben,

Chief, Broadcast Bureau.

[FR Doc. 79-39795 Filed 12-28-79; 8:45 am]

BILLING CODE 6712-01-M

[1] Should Hosanna Christian Broadcasting, Inc. desire a specialized programming inquiry, it may submit to the presiding Administrative Law Judge a showing that its proposed format—religious programming—is not available in the market in a substantial amount. *George E. Cameron, Jr. Communication (KROQ)*, 71 FCC 2d 460, 45 RR 2d 689 (1979).

[2] See *Revised Procedures for the Processing of Contested Broadcast Applications*, 72 FCC 2d 202, 45 RR 2d 1220 (1979).

DEPARTMENT OF HEALTH, EDUCATION, AND WELFARE

Alcohol, Drug Abuse, and Mental Health Administration

National Advisory Council on Drug Abuse and Mental Health Small Grant Review Committee; Meetings

In accordance with Section 10(a)(2) of the Federal Advisory Committee Act (5 U.S.C. Appendix I), announcement is made of the following National advisory bodies scheduled to assemble during the month of January 1980.

National Advisory Council on Drug Abuse, January 24-25, 9:00 a.m., Conference Room G, Parklawn Building, 5600 Fishers Lane, Rockville, Maryland 20857.

Open—January 24, 9:00 a.m.-5:00 p.m., January 25, 1:00 p.m.-5:00 p.m.

Closed—January 25, 9:00 a.m.-12:00 noon.

CONTACT: Pamela Jo Thurber, Room 10-05, Parklawn Building, 5600 Fisher Lane, Rockville, Maryland 20857 (301)443/6480.

Purpose: The National Advisory Council on Drug Abuse advises and makes recommendations to the Secretary of Health, Education, and Welfare, the Administrator, Alcohol, Drug Abuse, and Mental Health

Administration, and the Director, National Institute on Drug Abuse, on the development of new initiatives and priorities and the efficient administration of drug abuse research, training, demonstration, prevention, and community services programs. The Council also gives advice on policies and priorities for drug abuse grants and contracts, and reviews and makes recommendations on grant applications.

Agenda: On January 24, from 9:00 A.M. to 5:00 P.M. and January 25, from 1:00 P.M. to 5:00 P.M. the session will be open to the public for discussion of program developments and policy issues.

On January 25, from 9:00 A.M. to 12:00 noon, the Council will conduct a final review of grant applications for Federal Assistance and this session will not be open to the public in accordance with the determination by the Administrator, Alcohol, Drug Abuse, and Mental Health Administration, pursuant to the provisions set forth in Section 552b(c)(6), Title 5 U.S. Code and Section 10(d) of Public law 92–463 (5 U.S.C. Appendix I).

On January 24, from 2:00 P.M. to 5:00 P.M., the Council will hear statments from interested organizations in the drug abuse field. Persons interested in appearing should contact the Executive Secretary to be scheduled. The oral presentation shall be no longer than 10 minutes, although written statements may be submitted in supplement.

Mental Health Small Grant Review Committee, January 31–February 2, 1:00 p.m., Rooms E 430 and E 630, The Shoreham Americana Hotel, 2500 Calvert Street NW., Washington, D.C. 20008.
Open: January 31, 1:00–2:00 p.m.
Closed: Otherwise.
CONTACT: LaVerl P. Klein, Room 10–C14, Parklawn Building, 5600 Fishers Lane, Rockville, Maryland 20857 (301)443–4337.

Purpose: The Committee is charged with the initial review, based on the scientific and technical merit of applications submitted to the NIMH for Federal assistance of activities for research in all disciplines pertaining to alcohol, drug abuse, and mental health, including psychology, sociology, anthropology, psychiatry, and the biological sciences, and makes recommendations to the National Advisory Councils of the respective Institutes for final review.

Agenda: From 1:00–2:00 p.m. on January 30, 1980, the meeting will be open for discussion of administrative announcements and program developments. Otherwise, the committee will be performing initial review of grant applications for Federal assistance and will not be open to the public in accordance with the determination by the Administrator, Alcohol, Drug Abuse, and Mental Health Administration, pursuant to the provisions of Section 552(c)(6), Title 5 U.S. Code and Section 10(d) of Public Law 92–463 (5 U.S.C. Appendix I).

Substantive program information may be obtained from the contact persons above. The NIDA Information Officer who will furnish upon request summaries of the meeting and rosters of the Council members is Ms. Mary-Carol Kelley, Program Information Officer for Drug Abuse, NIDA, Room 10A–56, Parklawn Building, 5600 Fishers Lane, Rockville, Maryland 20857, (301)443–6245. The NIMH Committee Management Officer who will furnish upon request summaries of the meeting and rosters of the committee members is Mrs. Zelia Diggs, Office of the Associate Director for Extramural Programs, NIMH, Room 9–95, Parklawn Building, 5600 Fishers Lane, Rockville, Maryland 20857, 301/443–4333.

Dated: December 20, 1979.

Elizabeth A. Connolly,

Committee Management Officer, Alcohol, Drug Abuse, and Mental Health Administration.

[FR Doc. 79-39631 Filed 12-28-79; 8:45 am]
BILLING CODE 4110-88-M

Rape Prevention and Control Advisory Committee; Rechartering

Pursuant to the Federal Advisory Committee Act of October 6, 1972, Pub. L. 92–463 (5 U.S.C. Appendix I), the Alcohol, Drug Abuse, and Mental Health Administration announces the rechartering by the Secretary of Health, Education, and Welfare on December 10, 1979, of the Rape Prevention and Control Advisory Committee. The authority for this Committee is continuing and a charter will be filed not later than May 7, 1981, in accordance with section 14(b)(2) of said Act.

Dated: December 17, 1979.

Gerald L. Klerman,

Administrator, Alcohol, Drug Abuse, and Mental Health Administration.

[FR Doc. 79-39682 Filed 12-28-79; 8:45 am]
BILLING CODE 4110-88-M

Center For Disease Control

Ethics Advisory Board; Meeting

Notice is hereby given that the Ethics Advisory Board will hold a meeting on February 1–2, 1980, in Room 800 of the Hubert H. Humphrey Building, 200 Independence Avenue, S.W., Washington, D.C. Meetings will begin at 9 a.m. on both Friday and Saturday and be open to the public subject to limitations of available space.

The agenda for the meeting will include a discussion of procedural matters and further consideration of the request for limited exemption from the Freedom of Information Act by the Center for Disease Control.

Requests for information should be directed to Ms. Amanda F. MacKenzie, Westwood Building, Room 125, 5333 Westbard Avenue, Bethesda, Maryland, 20016, telephone 301–496–7776.

Dated: December 17, 1979.

Barbara Mishkin,

Staff Director

Ethics Advisory Board.

[FR Doc. 79-39687 Filed 12-28-79; 8:45 am]
BILLING CODE 4110-08-M

Office of the Secretary

National Advisory Committee on the White House Conference on Families; Meeting

The National Advisory Committee on the White House Conference on Families was established to advise the Secretary, the Chair of the Conference, and the Conference staff on matters pertaining to the Conference, including the development, implementation and execution of overall plans and procedures for the Conference.

In accordance with Pub. L. 92–463, notice is hereby given of a meeting to be held Wednesday, January 23, 1980, at 7:30 p.m.; Thursday, January 24, at 9:00 a.m.; and Friday, January 25, at 8:30 a.m. The session on Wednesday evening will be held in the Shoreham Hotel, 2500 Calvert Street, N.W., Washington, D.C. at a room location to be posted by the hotel. Other sessions will be held in Room 800 of the Hubert H. Humphrey Building at 200 Independence Avenue, S.W., Washington, D.C.

The agenda on Wednesday evening, January 23, will include opening reflections and a review of the hearings and testimony presented. It is anticipated that this session will be concluded by 9:30 p.m.

On Thursday, January 24, and Friday, January 25, the agenda will include: a review of state activities; discussion of format and agenda for the White House Conferences; criteria and process for selection of at-large delegates and other Conference participants; review of the process for selection and refinement of issues to be addressed by the Conference; designation of members of the National Advisory Committee to serve on Issue Work Groups; and sessions of such groups.

All sessions will be open to the public; however, seating capacity will be limited.

Further information on the meeting may be obtained from the White House Conference on Families at 330 Independence Avenue, S.W., Washington, D.C. 20201; telephone number; 202-245-6073.

Dated: December 21, 1979.

John L. Carr,

Executive Director.

[FR Doc. 79-39699 Filed 12-28-79; 8:45 am]

BILLING CODE 4110-12-M

White House Conference on Families; National Hearings

The White House Conference on Families was called by President Carter to "examine the strengths of American families, the difficulties they face, and the ways in which family life is affected by public policies."

The Conference is guided by a 41-person National Advisory Committee, which has adopted an innovative conference process to take the White House Conference on Families to the people. This process includes hearings, state activities, national organization activities, and issue work groups which will lead up to three White House Conferences across the country in the summer of 1980.

The purpose of the hearings is to give families an opportunity to discuss their concerns, ideas, successes and problems relating to contemporary family life. The hearings will help to identify key issues and concerns for the White House Conference on Families. Testimony should identify the most pressing concerns facing American families today and into the 1980's, together with any recommended policies, programs, and strategies for meeting these concerns. Information from the hearings will be available to all the states and will be used as background material for delegates to the National Conferences.

The seventh of the national hearings will be held in Michigan:

January 11—Seattle, Washington; A. A. Lemieux Library, Seattle University, Main Entrance, 12 and Columbia

January 12—Yakima, Washington; Southeast Yakima Community Center, 1211 South 7th

The hearings are open to the public. Members of the National Advisory Committee on the White House Conference on Families will serve as the hearing panel and are hoping to hear testimony from family members themselves, as well as from representatives of organizations and agencies that are concerned about families, members of the academic community, leaders in the religious community, public officials, employers and program administrators.

Requests to testify must be received by the White House Conference on Families, 330 Independence Avenue, S.W., Washington, D.C. 20201, no later than January 4, 1980, for the Seattle and Yakima, Washington hearings. It is anticipated that more requests to testify will be received than time will permit. Advance registration is, therefore, strongly encouraged to accommodate as many people as possible. Persons wishing to testify should submit a written request which includes the following information: name; home address; telephone numbers at both home and office; whether or not testimony is on behalf of an agency or organization and, if so, the name of the group and individuals' position title; topic of proposed testimony; preferences of location and day or evening testimony and whether an English translator or other special arrangements will be needed.

Time limits will be strictly enforced on all persons giving testimony. Whenever feasible, participants will be grouped together when dealing with similar topics. Members of the National Advisory Committee will be given an opportunity to question individuals and group members after their presentations.

Each hearing will also have a limited time set aside for individuals who have not signed up in advance. Individuals not wishing to testify at the hearings are welcome to attend.

Written testimony is also strongly encouraged and will be included as part of the record of the hearing. It should be typed and not exceed 1,000 words.

FOR FURTHER INFORMATION CONTACT:

David Miller (206) 442-0486, HEW Regional Office, Seattle, Washington

or

White House Conference on Families, 330 Independence Avenue SW., Washington, D.C. 20201, (202) 472-4395

John L. Carr,

Executive Director, White House Conference on Families.

[FR Doc. 79-39698 Filed 12-28-79; 8:45 am]

BILLING CODE 4110-12-M

Monthly Adequate Actuarial Rates and Monthly Premium Rates

AGENCY: Office of the Secretary (OS), HEW.

ACTION: Notice.

SUMMARY: This notice announces the monthly adequate actuarial rates for aged (age 65 or over) and disabled (under age 65) enrollees in the Medicare Supplementary Medical Insurance (SMI) program for the twelve months beginning July, 1980. It also promulgates the monthly SMI premium rate to be paid by all enrollees during the twelve months beginning July 1980.

EFFECTIVE DATE: July 1, 1980.

FOR FURTHER INFORMATION CONTACT: Guy King, Director, Division of Medicare Cost Estimates, 3-0-3 Operations Building, 6401 Security Boulevard, Baltimore, Maryland 21235, telephone: (301) 594-2826.

SUPPLEMENTARY INFORMATION: Each December, the Secretary of Health, Education, and Welfare is required by law to release two notices relating to the Medicare Supplementary Medical Insurance (SMI) program.

One notice announces two amounts that, according to actuarial estimates, will equal, respectively, one-half the expected average monthly cost of SMI per aged enrollee (age 65 or over) and one-half the expected average monthly cost of SMI per disabled enrollee (under age 65) during the 12 months beginning the following July. These amounts are called "monthly adequate actuarial rates."

The second notice promulgates the monthly SMI premium rate to be paid by aged and disabled enrollees for the 12 months beginning the following July. (Although the costs to the program per disabled enrollee are higher than for the aged, the law provides that they pay the same premium amount.) The premium rate must be the lesser of the adequate actuarial rate for aged enrollees, or the current monthly premium rate increased by the same percentage as the most recent general increase in monthly Title II social security benefits (effective the preceding June). The difference between the premiums paid by all enrollees and total incurred costs is met from the general revenues of the Federal Government.

The notices of these announcements for the period July 1, 1980, through June 30, 1981, are as follows:

Notice of Monthly Adequate Actuarial Rates

As required by sections 1839(c)(1) and (4) of the Social Security Act (42 U.S.C. 1395r(c)(1) and (4)), as amended, I have determined that the monthly adequate actuarial rates applicable for the 12-month period beginning July 1, 1980, are $16.30 for enrollees age 65 and over, and $25.50 for disabled enrollees under age 65. The accompanying statement gives the actuarial assumptions and bases from which these rates are derived.

Notice of Monthly Premium Rate

As required by section 1839(c)(3) of the Social Security Act (42 U.S.C. 1395r(c)(3)), as amended, I have determined that the basic premium amount will be $9.60 monthly during the period beginning July 1, 1980, and ending June 30, 1981.

Statement of Actuarial Assumptions and Bases Employed in Determining the Monthly Adequate Actuarial Rates and the Standard Monthly Premium Rate for the Supplementary Medical Insurance Program Beginning July 1980

1. *Actuarial Status of the Supplementary Medical Insurance Trust Fund.*—The law requires that the Supplementary Medical Insurance (SMI) program be financed on an incurred basis. That is, program income during the 12-month period for which the adequate actuarial rates are effective must be sufficient to pay for services rendered during that period (including associated administrative costs) even though payment for some of these services will not be made until after the close of the period. The portion of income required to cover benefits not paid until after the close of the 12-month period is added to the trust fund until needed. Thus, the assets in the trust fund at any time should be no less than benefit and administrative costs incurred but not yet paid.

Because the adequate rates are established prospectively, they are subject to projection error. As a result, the income to the program may not equal incurred costs. Therefore, trust fund assets should be maintained at a level which is adequate to cover the impact of a moderate degree of projection error in addition to the amount of incurred but unpaid expenses. Table 1 summarizes the estimated actuarial status of the trust fund as of June 30 for each of the years 1978–80.

Table 1.—*Actuarial Status of the SMI Trust Fund Years Ending June 30 of 1978–80*

[in millions]

Year ending June 30	Assets	Liabilities	Assets less liabilities
1978	$3,834	$2,299	$1,535
1979	4,683	2,592	2,291
1980	4,877	2,989	1,888

2. *Monthly Adequate Actuarial Rate for Enrollees Age 65 and Older*

The monthly adequate actuarial rate is one-half the monthly projected cost of benefits and administrative expenses for each enrollee age 65 and older, adjusted to allow for the following: interest earnings on assets in the trust fund; contingency margin; and amortization of unfunded liabilities.

The monthly adequate actuarial rate for enrollees age 65 and older for the year ending June 30, 1981, was determined by projecting per enrollee cost for the 12-month period ending June 30, 1978, by type of service. The projected costs for the years ending June 30 of 1978–1981 are shown in Table 2. The values for the 12-month period ending June 30, 1978, were established from program data. Subsequent years were projected using a combination of program data and data from external sources. The projection factors used are shown in Table 3.

Table 2.—*Derivation of Promulgated Monthly Rate for Enrollees Age 65 and Over, Years Ending June 30 of 1978–81*

	1978	1979	1980	1981
Covered services (at level recognized):				
Physicians' reasonable charges	$11.33	$12.57	$13.97	$15.90
Radiology and pathology	.61	.72	.83	.96
Outpatient hospital and other institutions	1.99	2.39	2.75	3.16
Home health agencies	.33	.35	.40	.46
Group practice plans	.30	.24	.39	.45
Independent lab	.17	.19	.22	.25
Total services	14.73	16.46	18.56	21.18
Cost sharing:				
Deductible	−1.77	−1.79	−1.81	−1.83
Coinsurance	−2.41	−2.73	−3.11	−3.59
Total benefits	10.55	11.94	13.64	15.76
Administrative expenses	.76	.85	.87	.89
Incurred expenditures	11.31	12.79	14.51	16.65
Value of interest on fund	−.20	−.33	−.34	−.35
Margin for contingencies and to amortize unfunded liabilities	1.19	.94	−.77	.00
Promulgated monthly rate	12.30	13.40	13.40	16.30

Table 3.—*Projection Factors Years Ending June 30 of 1979–81*

[in percent]

	1979	1980	1981
Physicians' services:			
Fees [1]	7.7	7.9	10.5
Utilization [2]	3.0	3.0	3.0
Outpatient hospital services per enrolled [3]	20.0	15.0	15.0
Home health agency services per enrolled [3]	4.0	15.0	15.0
Group practice plan services per enrolled [3]	−18.0	61.3	15.0
Other services per enrollee [3]	17.0	15.0	15.0

[1] As recognized for payment under the program.
[2] Increase in the number of services received per enrollee and greater relative use or more expensive services.
[3] The values for 1979 and/or 1980 differ significantly from those contained in last year's promulgation notice due to an additional year's data which support the current values.

The projected monthly rate required to pay for one-half of the total of benefits and administrative costs for enrollees age 65 and over for the year ending June 30, 1981, is $16.65. The monthly adequate actuarial rate of $16.30 provides an adjustment for interest earnings and no margin for contingencies.

3. *Monthly Adequate Actuarial Rate for Disabled Enrollees.*—Disabled enrollees are those persons enrolled in SMI because of entitlement to disability benefits for not less than 24 consecutive months or because of entitlement to Medicare under the end-stage renal disease program. Projected monthly costs for disabled enrollees (other than those suffering from end-stage renal disease) are prepared in a fashion exactly parallel to projections for the aged, using the same actuarial assumptions. Costs for the end-stage renal disease program are projected using a computer model because of the complex demographic problems involved. The combined results for all disabled enrollees are shown in Table 4.

The projected monthly rate required to pay for one-half of the total of benefits and administrative costs for disabled enrollees for the year ending June 30, 1981, is $30.90. The monthly adequate actuarial rate of $25.50 provides an adjustment for interest earnings and a margin for contingencies.

TABLE 4.—*Derivation of Promulgated Monthly Rate for Disabled Enrollees Years Ending June 30 of 1978–81*

	1978	1979	1980	1981
Covered services (at level recognized):				
Physicians' reasonable charges	$13.21	$14.77	$16.51	$18.77
Radiology and pathology	.59	.70	.80	.93
Outpatient hospital and other institutions	11.14	13.05	15.06	17.17
Home health agencies	.27	.28	.32	.37
Group practice plans	.24	.19	.31	.36
Independent lab	.22	.26	.29	.34
Total services	25.67	29.25	33.29	37.94

TABLE 4.—*Derivation of Promulgated Monthly Rate for Disabled Enrollees Years Ending June 30 of 1978-81*—Continued

	1978	1979	1980	1981
Cost sharing:				
Deductible	−1.64	−1.66	−1.67	−1.70
Coinsurance	−4.64	−5.33	−6.11	−6.99
Total benefits	19.39	22.26	25.51	29.25
Administrative expenses	1.40	1.59	1.62	1.65
Incurred expenditures	20.79	23.85	27.13	30.90
Value of interest on fund	−1.99	−2.70	−2.76	−2.81
Margin for contingencies and to amortize unfunded liabilities	6.20	3.85	.63	−2.59
Promulgated monthly rate	25.00	25.00	25.00	25.50

4. Sensitivity Testing.—Several factors contribute to uncertainty about future trends in medical care costs. In view of this, it seems appropriate to test the adequacy under alternate assumptions of the rates promulgated here. The most unpredictable factors which contribute significantly to future costs are outpatient hospital costs, physician utilization (measured indirectly and reflecting the use of more visits per enrollee, the use of more expensive services, and other factors not explained by simple price per service increases), and increases in physician fees as constrained by the program's reasonable charge screens and economic index. Two alternative sets of assumptions and the results of those assumptions are shown in Table 5. All assumptions not shown in Table 5 are the same as in Table. 3.

Table 5 indicates that, under the assumptions used in preparing this report, the promulgated monthly rates will result in an excess of assets over liabilities of $1,723 million by the end of June 1981. This amounts to 12.3 percent of the estimated total incurred expenditures for the following year. Assumptions which are somewhat more pessimistic produce an excess of assets over liabilities of $187 million by the end of June 1981, which amounts to 1.2 percent of the estimated total incurred expenditures for the following year. Under fairly optimistic assumptions, the promulgated monthly rates will result in an excess of $3,180 million, which amounts to 26.3 percent of the estimated total incurred expenditures for the following year.

Table 5.—*Projection Factors and the Actuarial Status of the SMI Trust Fund Under Alternative Sets of Assumptions Years Ending June 30 of 1980-81*

	This projection		Low assumption		High assumption	
	1980	1981	1980	1981	1980	1981
Projection factors (in percent):						
Physicians' fees [1]	7.9	10.5	5.9	8.5	9.9	12.5
Utilization of physicians' services [2]	3.0	3.0	1.0	1.0	5.0	5.0
Outpatient hospital services per enrollee [3]	15.0	15.0	5.0	5.0	25.0	25.0
Home health agency services per enrollee [3]	15.0	15.0	5.0	5.0	25.0	25.0
Actuarial status (in millions):						
Assets	$4,877	$5,191	$5,215	$6,416	$4,533	$3,899
Liabilities	2,989	3,468	2,889	3,236	3,088	3,712
Assets of less liabilities	1,888	1,723	2,326	3,180	1,445	187
Ratio of assets less liabilities to expenditures (in percent) [4]	15.7	12.3	21.0	26.3	11.1	1.2

[1] As recognized for payment under the program.
[2] Increase in the number of services received per enrollee and greater relative use of more expensive services.
[3] The values for 1980 differ significantly from those contained in last year's promulgation notice due to an additional year's data which support the current values.
[4] Ratio of assets less liabilities at the end of the year to total incurred expenditures during the following year, expressed as a percent.

5. Standard Premium Rate.—The law provides that the standard monthly premium rate, promulgated to apply for both aged and disabled enrollees, shall be the lesser of:

1. The adequate actuarial rate for enrollees age 65 and older; or

2. The current standard monthly premium, increased by the same percentage that the level of old-age, survivors, and disability insurance (OASDI) benefits has been increased since the May preceding the promulgation (and rounded to the nearer dime).

The standard monthly premium rate for the 12-month period ending with June 30, 1980, is $8.70. The OADSI benefit table was increased 9.9 percent in June 1979. The $8.70 rate, increased by 9.9 percent and rounded to the nearer ten cent multiple, is $9.60. Since this is less than the adequate actuarial rate, the standard premium rate is $9.60 for the 12 months ending with June 1981.

(Sections 1839(c)(1), (3), and (4) of the Social Security Act (42 U.S.C. 1395r(c)(1), (3), and (4))

(Catalog of Federal Domestic Assistance Program No. 13,774, Medicare Supplementary Medical Insurance)

Dated: December 19, 1979.

Nathan J. Stark,

Acting Secretary.

[FR Doc. 79-39799 Filed 12-28-79; 8:45 am]

BILLING CODE 4110-12-M

DEPARTMENT OF THE INTERIOR

Bureau of Indian Affairs

Irrigation Operation and Maintenance Charges; Water Charges and Related Information on the Wapato Irrigation Project, Washington

This notice of operation and maintenance rates and related information is published under the authority delegated by the Secretary of Interior to the Assistant Secretary—Indian Affairs in 230 DM 1 and redelegated by the Assistant Secretary—Indian Affairs to the Area Directors in 10 BIAM 3. The authority to issue regulations is vested in the Secretary of the Interior by 5 U.S.C. 301 and Sections 463 and 465 of the Revised Statutes (25 U.S.C. 2 and 9), and also under 25 CFR 191.1(e).

On November 16, 1979, in 44 FR 66072, there was published a notice of proposed assessment rates and related provisions on the Wapato Irrigation Project for Calendar Year 1980 and subsequent years until further notice. These assessment rates were proposed pursuant to the authority contained in the Acts of August 1, 1914 (38 Stat. 583), and March 7, 1928 (45 Stat. 210).

Interested persons were given 30 days in which to submit written comments, views or arguments regarding the proposed rates and related provisions. During this period no comments, suggestions, or objections were submitted. Therefore, the assessment rates and related provisions as set forth below are adopted effective January 30, 1980.

Wapato Irrigation Project—General

Administration

The Wapato Irrigation Project, which consists of the Ahtanum Unit, Toppenish-Simcoe Unit, and Wapato-Satus Unit within the Yakima Indian Reservation, Washington, is administered by the Bureau of Indian Affairs. The Project Engineer of the Wapato Irrigation Project is the Officer-in-Charge and is fully authorized to carry out and enforce the regulations, either directly or through employees designated by him. The general regulations are contained in Part 191, Operation and Maintenance, Title 25—Indians, Code of Federal Regulations (42 FR 30362, June 14, 1977).

Irrigation Season

Water will be available for irrigation purposes from April 1 to September 30 each year. These dates may be varied as much as 15 days when weather conditions and the necessity for doing maintenance work warrants doing so.

Request for Water Delivery and Changes

Requests for water delivery and changes will be made at least 24 hours in advance. Not more than one change will be made per day. Changes will be made only during the ditchrider's regular tour. Pump shut-down, regardless of duration, without the required notice will result in the delivery being closed and locked. Repeated violations of this rule result in strict enforcement of rotation schedules. Water users will change their sprinkler lines without shutting off more than one-half of their lines at one time. Sudden and unexpected changes in ditch flow results in operating difficulties and waste of water.

Time for Payment of Water Charges

The assessments fixed by these regulations shall become due April 1 of each year and are payable on or before that date. To all charges assessed against lands in patent in fee ownership, and those paid by lessees of Indian lands direct to the project office, remaining unpaid on July 1 following the due date, there shall be added a penalty of one and one-half percent for each month, or fraction thereof, from the due date until the charges are paid.

Charges for Special Services

Charges will be collected for various special services requested by the general public, water users and other organizations during the Calendar Year 1980 and subsequent years until further notice, as detailed below:

(1) Requests for Irrigation Accounts and Status Reports, Per Report	$15.00
(2) Requests for Verification of Account Delinquency Status, Per Report	10.00
(3) Requests for Splitting of Operation and Maintenance Bills (in addition to minimum billing fee), Per Bill	10.00
(4) Requests for Billing of Operation and Maintenance to Other than Owner or Lessee of Record (in addition to minimum billing fee), Per Bill	10.00
(5) Requests for Other Special Services Similar to the above, when appropriate, Per Report	10.00

Ahtanum Unit

Charges

(a) The operation and maintenance rate on lands of the Ahtanum Irrigation Unit for the Calendar Year 1980 and subsequent years until further notice, is fixed at $6.25 per acre per annum for land to which water can be delivered from the project works.

(b) In addition to the foregoing charges there shall be collected a minimum charge of $5 for the first acre, or fraction thereof, on each tract of land for which operation and maintenance bills are prepared. The minimum bill issued for any area will, therefore, be the basic rate per acre plus $5.

Toppenish-Simcoe Unit

Charges

(a) The operation and maintenance rate for the lands under the Toppenish-Simcoe Irrigation Unit for the Calendar Year 1980 and subsequent years until further notice, is fixed at $6.25 per acre per annum for land for which an application for water is approved by the Project Engineer.

(b) In addition to the foregoing charges there shall be collected a minimum charge of $5 for the first acre, or fraction thereof, on each tract of land for which operation and maintenance bills are prepared. The minimum bill issued for any area will, therefore, be the basic rate per acre plus $5.

Wapato-Satus Unit

Charges

(a) The basic operation and maintenance rates on assessable lands under the Wapato-Satus Unit are fixed for the Calendar Year 1980 and subsequent years until further notice as follows:

(1) Minimum charge for all tracts	$18.50
(2) Basic rate upon all farm units or tracts for each assessable acre except Additional Works lands	18.50
(3) Rate per assessable acre for all lands with a storage water right, known as "B" lands, in addition to other charges per acre	2.20
(4) Basic rate upon all farm units or tracts for each assessable acre of Additional Works lands	19.60

(b) In addition to the foregoing charges there shall be collected a minimum charge of $5 for the first acre, or fraction thereof, on each tract of land for which operation and maintenance bills are prepared. The minimum bill issued for any area will, therefore, be the basic rate per acre plus $5.

Assessable Lands

The assessable lands of the Wapato-Satus Unit are classified under these regulations as follows:

(a) All Indian trust (A and B) land designated as assessable by the Secretary of the Interior, except land which has never been cultivated if in the opinion of the Project Engineer the cost of preparing such land for irrigation is so high as to preclude its being leased at this time for agricultural purposes.

(b) All Indian trust (A and B) land not designated as assessable by the Secretary of the Interior for which application for water is pending or on which assessments had been charged the preceding year.

(c) All patent in fee land covered be a water right contract, except on land that because of inadequate drainage is no longer productive. The adequacy of the drainage is determined by the Project Engineer.

(d) At the discretion of the Project Engineer and upon the payment of charges, patent in fee land for which an application for a water right of modification of a water right contract is pending.

Vincent Little,

Area Director.

December 19, 1979.

[FR Doc. 79-39731 Filed 12-28-79; 8:45 am]
BILLING CODE 4310-02-M

Management of Osage Judgement Funds for Education and Socioeconomic Programs; Receive Applications for Financial Education Assistance

December 12, 1979.

Title 25, Code of Federal Regulations, § 112.5(c), provides for the establishment of an Osage Tribal Education Committee to administer the $1 million fund set aside for Education and Socioeconomic Programs of benefit to the Osage Tribe by the Act of October 27, 1972 (86 Stat., 1295), Pub. L. 92-586.

Notice is hereby given that the Bureau of Indian Affairs in proceeding to establish the Committee under provisions set out by the regulations. In the interim, however, due to stringent time requirements, the Bureau of Indian Affairs is receiving applications for financial assistance for the second semester of the 1979-80 academic year from the $1 million fund. All applications received will be held until the Osage Tribal Education Committee convenes its first meeting and no

decisions on the awards will be made except by the Committee.

Interim application forms may be obtained from the: Superintendent, Osage Agency, Pawhuska, Oklahoma 74056.

Forrest J. Gerard,

Assistant Secretary—Indian Affairs.

[FR Doc. 79-39826 Filed 12-28-79; 8:45 am]

BILLING CODE 4310-02-M

Bureau of Land Management

[NM 28093]

Coal Lease Offering by Sealed Bid

December 21, 1979.

U.S. Department of the Interior, Bureau of Land Management, New Mexico State Office, P.O. Box 1449, Santa Fe, New Mexico 87501. Notice is hereby given that at 2:00 p.m., January 22, 1980, certain coal resources in the lands hereinafter described in San Juan County, New Mexico, will be offered for competitive lease by sealed bid of $25 per acre or more to the qualified bidder submitting the highest bonus bid in accordance with the provisions of the Mineral Leasing Act of 1920 (41 Stat. 437), as amended, and the Department of Energy Organization Act of August 4, 1977 (91 Stat. 565, 42 U.S.C. 7101). However, no bid will be accepted for less than fair market value as determined by the authorized officer. The sale will be held in Room 1-A, Sweeney Convention Center, corner of Marcy and Grant, Santa Fe, New Mexico. No bids received after 2:00 p.m., January 22, 1980, will be considered.

Coal Offered

The coal resource to be offered is contained in the Upper Cretaceous Fruitland Formation in two underground minable coal beds in the following described lands, located approximately six miles northwest of Farmington, New Mexico and three miles northeast of Fruitland, New Mexico:

T. 30 N., R. 15 W., NMPM (San Juan County)
Sec. 13: S½;
Sec. 14: S½;
Sec. 23: All;
Sec. 24: All;
Sec. 25: All;
Sec. 26: All;
Sec. 35: Lots 1,2,3,4, N½, N½S½.
Containing 3,855.60 acres.

The total underground recoverable reserves are estimated to be 75.8 million tons from the two beds. The coal is high volatile C bituminous and averages (as received) 9,290 Btu/lb. with .58% sulfur and 24.8% ash for the upper bed and 10,221 Btu/lb. with .99% sulfur and 17.65% ash for the lower bed. The upper bed averages about 6 feet thick, and the lower bed averages about 15 feet thick.

A lease issued as a result of this offering will provide for payment of an annual rental of $3.00 per acre or fraction thereof and a royalty payable to the United States.

Availability

Bidding instructions are included in the Detailed Statement of the Lease Sale. A copy of the Statement and of the proposed coal lease are available at the Bureau of Land Management, Room 3031 on the third floor of the U.S. Post Office and Federal Building, located on South Federal Place, Santa Fe, New Mexico. All case file documents and written comments submitted by the public on Fair Market Value or royalty rates, except those portions identified as proprietary by the commentor and meeting exemptions stated in the Freedom of Information Act, are also available for public inspection in the aforementioned Room 3031.

Arthur W. Zimmerman,

State Director.

[FR Doc. 79-39688 Filed 12-28-79; 8:45 am]

BILLING CODE 4310-84-M

[S. 2972]

California; Airport Lease

December 14, 1979.

Notice is hereby given that pursuant to the Act of May 24, 1928 (49 U.S.C. 211-214) the County of Calaveras, California, Department of Public Works, has applied for an airport lease for the following public lands:

Mount Diablo Meridian

T. 3 N., R. 12 E.
A portion of the SW¼NW¼ and N½SW¼ within Sec. 3, described as Beginning at the true point of beginning from which the ¼ corner of secs. 33 and 34, T. 4 N., R. 12 E., M.D.B.&M., bears the following consecutive courses: N. 35° 58' 40" W., 3,560.00 feet; thence N. 54° 01' 20" E., 650.00 feet; thence N. 43° 36' 33" E., 1,470.30 feet distant; from the true point of beginning on true bearings, N. 45° 30' 00" E., 250.00 feet; thence S. 44° 30' 00" E., 840.00 feet; thence S. 530.00 feet; thence E. 425.88 feet; thence S. 35° 58' 40" E., 117.23 feet; thence S. 54° 01' 20" W., 310.00 feet; thence N. 35° 58' 40" W., 240.00 feet; thence S. 54° 01' 20" W., 95.00 feet; thence N. 35° 58' 40" W., 1,350.00 feet to the point of beginning, containing 9.827 acres, more or less.

The purpose of this notice is to inform the public that the filing of this application segregates the above-described land from all other forms of use or disposal under the public land laws pursuant to 43 CFR 2911.2-3.

Interested persons desiring to express their views should promptly send their name and address to the Chief, Lands Section, Branch of Lands and Minerals Operations, Bureau of Land Management, 2800 Cottage Way, Federal Office Building, Room E-2605, Sacramento, California 95825.

Joan B. Russell,

Chief, Lands Section.

[FR Doc. 79-39687 Filed 12-28-79; 8:45 am]

BILLING CODE 4310-84-M

Potassium Lease Offering by Sealed Bid

December 21, 1979.

U.S. Department of the Interior, Bureau of Land Management, New Mexico State Office, P.O. Box 1449, Santa Fe, New Mexico 87501. Notice is hereby given that certain potassium resources in the lands hereinafter described in Eddy County, New Mexico, will be offered for lease by sealed bid to the qualified bidder of the highest cash amount per acre or fraction thereof in accordance with the provisions of the Act of February 7, 1927 (44 Stat. 1057), as amended. The minimum acceptable bid is $25 per acre. The sale will be held at 2:00 p.m., local time, January 22, 1980, in Room 1-A Sweeney Convention Center, corner of Marcy and Grant, Santa Fe, New Mexico. Sealed bids may not be modified or withdrawn unless such modification or withdrawal is received before the date, time and place set for opening of such bids.

Potassium Offered: The potassium resource to be offered is located in the following described lands, approximately 22 miles northeast of Carlsbad, New Mexico:

T. 20 S., R. 31 E., New Mexico Principal Meridian
Sec. 13, N½, SW¼, NE¼SE¼, S½SE¼;
Sec. 14, NE¼, S½;
Sec. 15, E½SE¼;
Sec. 22, E½E½;
Sec. 24, All;
Sec. 27, E½NE¼, NE¼SE¼.
Containing 2,080.00 acres.

Potash in the area is contained in the Salado Formation in the McNutt Potash Zone. The tenth ore zone contains an estimated 25.9 million tons in place of 15.4% K_2O of which an estimated 20.5 million tons are recoverable.

Public Comments: The public is invited to submit written comments concerning fair market value of the offered potassium reserves to the Bureau of Land Management and the U.S. Geological Survey. These comments will be reviewed and taken into consideration in the determination of fair market value of the potassium of the offered lands. Should any information

submitted as comments be considered to be proprietary by the commenter, the information should be labeled as such and stated in the first page of the submission. Comments should be sent to the State Director, Bureau of Land Management, P.O. Box 1449, Santa Fe, New Mexico 87501 and to the Regional Conservation Manager, Conservation Division, Geological Survey, P.O. Box 25046, Mail Stop 609, Denver Federal Center, Denver, Colorado 80225, to arrive no later than January 21, 1980.

Notice of Availability: Bidding instructions are included in the detailed statement of lease sale. All case file documents and written comments submitted by the public on fair market value or royalty rates except those portions identified as proprietary by the commenter and meeting the exemptions stated in the Freedom of Information Act, are available for public inspection in Room 3031, U.S. Post Office and Federal Building, South Federal Place, Santa Fe, New Mexico 87501.

The successful bidder is obligated to pay for the newspaper publication of this notice.

Arthur W. Zimmerman,

State Director.

[FR Doc. 79-39689 Filed 12-28-79; 8:45 am]

BILLING CODE 4310-84-M

Grazing Use Adjustments; Special Appeal Right Provided by the 1980 Department of the Interior Appropriations Act

In 1980, the Department of the Interior Appropriations Act provides a special right to appeal grazing use reductions ordered in 1979. The special appeal must be filed in the District Office of the Bureau of Land Management that issued the decision on or before February 25, 1980.

Where final decisions have been placed in full force and effect, the appeal will result in suspension of a portion of the reduction in excess of 10 percent of the prior year's active authorized use, pending a final action on the appeal.

Further information can be obtained from local Bureau of Land Management District Offices.

Dated: December 26, 1979.

Frank Gregg,

Director.

[FR Doc. 79-39704 Filed 12-28-79; 8:45 am]

BILLING CODE 4310-84-M

Utah; Initial Wilderness Inventory Final Decisions Interstate Units

AGENCY: Bureau of Land Management.

ACTION: Notice.

SUMMARY: This notice is published to clarify the status of the interstate units involved in Utah's Initial Wilderness Inventory. A Federal Register notice published August 8, 1979 stated that "the decision on interstate units (involving Utah) would not become final until each respective state announces a decision on their portion of the unit". Final decisions have been announced by the states bordering Utah and are now in effect.

Except as noted below the final decision on the interstate units (Utah portion) is as shown on the Wilderness Inventory—State of Utah map published in August 1979.

UT-02-004, 009, 051, 047 and UT-050-051A (interstate units with Nevada) were shown on the Utah map as going into the intensive inventory, however, these units have been dropped from further wilderness consideration based on comments received in both of the states in which the unit lies.

FOR FURTHER INFORMATION CONTACT: Kent Biddulph, Utah BLM state office (801) 524-5326.

Dated: December 19, 1979.

Gary J. Wicks,

State Director.

[FR Doc. 79-39690 Filed 12-28-79; 8:45 am]

BILLING CODE 4310-84-M

Utah; Announcement of Intensive Wilderness Inventory Decision on Units Protested

AGENCY: Bureau of Land Management.

ACTION: Notice.

SUMMARY: This notice announces the Utah State Director's decision on protests received on units UT-060-007, 011 and 012. On November 29, 1979, a Federal Register notice was published indicating the final decision on the Intensive Inventory on the Intermountain Power Project in the Utah Moab District became effective, except for the above units on which written protests were filed. The State Director's final decision on these protested units is now in effect as follows: Units UT-060-011 and 012 have been dropped from further wilderness review and the restrictions imposed by section 603 of the Federal Land Policy and Management Act (FLPMA) are no longer in effect.

The original decision on UT-060-007 was to designate a 31,360 acre portion of the unit as a Wilderness Study Area (WSA). That decision is not changed as a result of the protest received. That portion of the unit not designated as a WSA is dropped from further wilderness review and the restrictions imposed by section 603 of FLPMA are no longer in effect. The portion of the unit designated as a WSA will remain under restrictions imposed by section 603 of FLPMA.

FOR FURTHER INFORMATION CONTACT: Bill Greene, wilderness specialist, Moab, Utah (801) 259-6111.

Dated: December 19, 1979.

Gary J. Wicks,

State Director.

[FR Doc. 79-39691 Filed 12-28-79; 8:45 am]

BILLING CODE 4310-84-M

Idaho Falls District, Idaho; Redelegation of Authority to Area Managers

In accordance with Bureau Order No. 701 of July 23, 1964 (FR Doc. 64-17492; 29 FR 10526), as amended, the Area Managers of the Big Butte, Medicine Lodge, and Soda Springs Resource Areas of the Idaho Falls District, Idaho, are authorized to perform in their respective areas of responsibility, in accordance with existing policies and regulations of this Department and under the direct supervision of the District Manager, the functions listed below, subject to the limitations set forth in Bureau Order No. 701, as amended, together with any limitations specified below.

Section 3.2—General and Miscellaneous Matters. On matters in which he/she is authorized to act, the Area Manager may take all action on:

(b) Cancellations or surrender of contracts, leases, and permits. Make partial or complete cancellation or accept surrenders of contracts, leases, and permits.

Section 3.3—Fiscal Affairs. On matters in which he/she is authorized to act, the Area Manager may take action on:

(a) Bonds and Forfeitures

(1) Take all actions on bonds required in connection with matters pertaining to the lands or the resources thereof under his/her jurisdiction.

(2) Expend funds made available as a result of the forfeiture of a bond or deposit by a timber purchaser or permittee or of a compromise under the Public Land Administration Act (43 U.S.C. 1381).

(d) Trespass. Determine liability for trespass on the public lands when actual damages do not exceed $5,000.00. Accept payment in full irrespective of amount. Dispose of resources recovered in trespass cases for not less than the appraised value thereof.

Section 3.6—Minerals. The Area Manager may take all actions on:

(m) Oil and gas explorations operations. All actions on oil and gas exploration matters pursuant to 43 CFR Subpart 3045.

(n) Geothermal Resource Leases. Take all actions involving geothermal resource exploration operations as provided in 43 CFR 3203.6 and Subpart 3209.

Section 3.7—Range Management. The Area Manager may take all listed actions on:

(a) Grazing District Administration.

(1) Licenses and permits to graze or trail livestock.

(2) Permits or cooperative agreements to construct and maintain range improvements and determine the value of such improvements.

(3) The expenditure of funds appropriated by Congress, or contributed by individuals, associations, advisory boards, or others for the construction, purchase, or maintenance of range improvements.

(8) Refunds pursuant to 43 CFR 4130.5-2(a).

(b) Grazing Leases.

(1) Grazing leases of public lands, under Section 15 of the Act of June 28, 1934, as amended (43 U.S.C. 315m), and the permits or cooperative agreements to construct and maintain improvements on lands so leased, and to determine the value of such improvements.

(d) Soil and Moisture.

(1) Soil and moisture conservation on the public lands, pursuant to the National Soil Conservation Act of April 27, 1935 (16 U.S.C. 590a et. seq.).

(f) Protection and management of wild free-roaming horses and burros, except authorizations to capture and remove excess animals.

Section 3.8—Forest Management. The Area Manager may take all actions on:

(a) Disposition of forest products except sales of timber in excess of 10,000,000 board feet measure must be approved by the State Director or his delegate prior to advertisements.

Section 3.9—Land Use. The Area Manager may take all the listed action on:

(g) Material other than forest products not exceeding $2,000.00 unless authority to make sales in greater amounts is delegated to the District Manager.

(o) Temporary Use Permits.

(1) Issue temporary use permits for public lands within the grazing district.

(3) Issue temporary land use permits for lands outside established grazing and forest districts when specifically authorized by the District Manager.

Section 3.10—Designation of Acting Officials.

(a) Area Managers may, by written order, designate any qualified employee of the Resource Area to perform the funcitons of the Area Manager in his/her absence.

(b) Each employee who serves in such capacity (a) above, shall prepare a memorandum to be kept in the District Office showing the date and hour of the commencement and termination of each period of his/her service in that capacity.

This delegation supersedes all previous Bureau Order No. 701 redelegations to Area Managers by the District Manager, Idaho Falls, Idaho.

This redelegation will be effective: December 31, 1979.

O'dell A. Frandsen,
District Manager.
Robert O. Buffington,
State Director.

[FR Doc. 79-39734 Filed 12-28-79; 8:45 am]
BILLING CODE 4310-84

[NM 31869]

New Mexico; Proposed Withdrawal and Reservation of Lands—Amendment

December 21, 1979.

Notice of proposed withdrawal and reservation of lands, appearing in the Federal Register of January 12, 1978 at page 1843, Doc. No. 78-842, is hereby amended to delete the following described lands:

New Mexico Principal Meridian, New Mexico
T. 25 N., R. 12 W.,
sec. 11, NE¼.
T. 16 N., R. 20 W.,
sec. 6, lots 16 to 23 inclusive.

Arthur W. Zimmerman
State Director.

[FR Doc. 79-39735 Filed 12-28-79; 8:45 am]
BILLING CODE 4310-84

North-Atlantic Outer Continental Shelf; Call for Nominations of and Comments on Areas for Oil and Gas Leasing

[Tentative Sale No. 52]

Purpose of Call

Section 102 of the Outer Continental Shelf Lands Act Amendments of 1978 describes the purposes of that Act. One of the purposes is to establish policies and procedures intended to expedite exploration and development of the Outer Continental Shelf in order to achieve national economic and energy policy goals, assure national security, reduce dependence on foreign sources, and maintain a favorable balance of payments in world trade. Equally important purposes include balancing energy resource development with the protection of the human, marine and coastal environments, as well as assuring States and local governments the opportunity to review and comment on decisions relating to OCS activities. To assist the Secretary of the Interior in carrying out these purposes, and pursuant to 43 CFR 3313.1, nominations are hereby requested for areas on the North Atlantic Outer Continental Shelf for possible oil and gas leasing under the Outer Outer Coninental Shelf Lands Act (43 U.S.C. 1331-1343). The Secretary is also requesting comments on the possible environmental impact and potential use conflicts in specified areas. These comments will be part of an information-gathering process to assemble current information on local environmental conditions within the Call area so that other impacts besides the realization of hydrocarbon potential can be assessed.

Description of Areas

The Area of the Call for Nominations and Comments in the North Atlantic Outer Continental Shelf under consideration includes a subsea basin known as the Georges Bank trough. The area is approximately 270 miles long by 165 miles wide with its center about 65 miles southeast of Nantucket Island. The most seaward portion is about 175 miles east and southeast of Nantucket Island. The proposed sale area is offshore the States of Massachusetts, Rhode Island, Connecticut, Maine, New Hamsphire, New York, and New Jersey.

OCS Official Protraction Diagrams

Description	Date of Latest Edition in Stock
1. NJ 19-1 Block Canyon	June 22, 1977.
2. NJ 19-2 Veatch Canyon	January 25, 1979.
3. NK 19-8 Chatham	April 18, 1979.
4. NK 19-9	March 20, 1975.
5. NK 19-10 Block Island Shelf	June 22, 1977.
6. NK 19-11	October 31, 1974.
8. NK 19-12	April 29, 1975.

These Protraction Diagrams may be purchased for $2.00 each from the Manager, New York Outer Continental Shelf Office, Bureau of Land Management, Federal Building, Suite 32-120, 26 Federal Plaza, New York, New York 10007.

Nominations and Comments will be considered for any or all of that part of the following Official Protraction Diagrams described below and excluding blocks previously leased:

(1) NK 19-8, Chatham: All blocks east of a line beginning at the NE corner of block 12, thence south to the SE corner of block 980.

(2) NK 19-9: All blocks west of a line beginning at the NE corner of block 1; thence south to the NE corner of block

45; thence east to the NE corner of block 46; thence south to the SE corner of block 90; thence east to the NE corner of block 135; thence south to the SE corner of block 179; thence east to the NE corner of block 224; thence south to the SE corner of block 268; thence east to the NE corner of block 313; thence south to the SE corner of block 357; thence east to the NE corner of block 402; thence south to the SE corner of block 490; thence east to the NE corner of block 535; thence south to the SE corner of block 579; thence east to the NE corner of block 624; thence south to the SE corner of block 668; thence east to the NE corner of block 713; thence south to the SE corner of block 757; thence east to the NE corner of block 802; thence south to the SE corner of block 846; thence east to the NE corner of block 891; thence south to the SE corner of block 935; thence east to the NE corner of block 980; thence south to the SE corner of block 980; thence west to the SW corner of block 969.

(3) NK 19–12: All blocks west of a line beginning at the NE corner of block 12; thence south to the NE corner of block 56; thence east to the NE corner of block 57; thence south to the SE corner of block 101; thence east to the NE corner of block 146; thence south to the SE corner of block 190; thence east to the NE corner of block 235; thence south to the SE corner of block 279; thence east to the NE corner of block 324; thence south to the SE corner of block 368; thence east to the NE corner of block 413; thence south to the SE corner of block 457; thence east to the NE corner of block 502, thence south to the SE corner of block 546; thence west to the SW corner of block 545; thence south to the SE corner of block 588; thence west to the SW corner of block 586; thence south to the SE corner of block 629; thence west to the SW corner of block 628; thence south to the SE corner of block 891; thence west to the SW corner of block 881.

(4) NK 19–11: All blocks except blocks 964 and 1008.

(5) NK 19–10, Block Island Shelf: All blocks south and east of a line beginning at the NE corner of block 26, thence south to the SE corner of block 422, thence west to the NW corner of block 450, thence south to the SW corner of block 977.

(6) NJ 19–2, Veatch Canyon: All blocks west of a line beginning at the NE corner of block 36; thence south to the SE corner of block 300; thence west to the SW corner of 265.

(7) NJ 19–1, Block Canyon: All blocks east of a line beginning at the NW corner of block 31; thence south to the SW corner of block 295; thence east to the SE corner of block 308.

Instruction on Call

Nominations must be described in reference to the Outer Continental Shelf Leasing Maps or Official Protraction Diagrams prepared by the Bureau of Land Management, Department of the Interior and referred to above. Only whole blocks or properly described subdivisions thereof, not less than one quarter of a block, may be nominated.

Those nominating twelve blocks or more that they wish to see considered for offering in this proposed lease sale, are requested to arrange their nominations into three groups according to the priority of their interest.

In addition to nominations, we are seeking comments about particular geological, environmental, biological, archaeological, socioeconomic conditions or problems or other information which might bear upon potential leasing and development of particular blocks where available.

Comments should be as specific as possible in identifying individual blocks or areas which should receive special concern and analysis.

Nominations and comments must be submitted not later than February 29, 1980, in envelopes labeled "Nominations of Tracts for Leasing in the Outer Continental Shelf—North Atlantic," or "Comments on Leasing in the Outer Continental Shelf—North Atlantic," as appropriate. They must be submitted to the Manager, New York Outer Continential Shelf Office, Bureau of Land Management, Federal Building, Suite 32–120, 26 Federal Plaza, New York, New York 10007. Copies should be sent to the Conservation Manager, Geological Survey, 1725 K Street, N.W., Suite 204, Washington, D.C. 20036, and to the Director, Attention 540, Bureau of Land Management, Department of the Interior, Washington, D.C. 20240.

Use of Information From Call

Nominations will be evaluated and used along with geologic and geophysical information to determine what, if any, tracts should be tentatively selected for further environmental analysis pursuant to the National Environmental Policy Act of 1969 (42 U.S.C. 4321–4347) and the OCS Lands Act, as amended. Generally because of limits on the geographic scope of areas which can be successfully planned for a single sale, only a small fraction of the tracts nominated are selected for further environmental analysis and possible leasing.

Comments will be considered along with other relevant information available to the Secretary to determine what tracts should be designated for further environmental analysis and study. As a general rule, tracts which are believed to have potential for the production of hydrocarbons are not excluded from environmental study unless the Secretary has sufficient information to conclude that it is not possible for those tracts to be developed in an environmentally safe manner.

In any event, selection of tracts for further environmental analysis does not insure that the tracts will be subsequently offered for lease or that they will be deleted for environemental or use conflicts. It simply insures that more information will be available when that decision is made. In performing the further environmental analysis leading to a sale decision, the Department will take into account comments received as it determines particular areas and issues for attention.

Final selection of tracts for competitive bidding will be made only at a later date after compliance with established Departmental procedures and all requirements of the National Environmental Policy Act of 1969. Notice of any tracts finally selected for competitive bidding will be published in the Federal Register stating the conditions and terms for leasing and the place, date, and hour at which bids will be received and opened.

Ed Hastey,
Associate Director, Bureau of Land Management.

Approved: December 21, 1979.

Heather L. Ross,
Deputy Assistant Secretary of the Interior.

[FR Doc. 79-39671 Filed 12-28-79; 8:45 am]
BILLING CODE 4310-84-M

Alaska State Office; Redelegation of Authority

1. Pursuant to the authority contained in Part I *Section 1.1(a) of Bureau Order 701 of July 23, 1964,* as amended. I hereby redelegate authority to take action as listed below.

District Manager in the Fairbanks District Office authority to take action on the following matters listed in Part II:

Sections
2.2(b)
2.2(c)
2.3(a)
2.3(c)
2.4(a)(4)
2.6(k)
2.9 All

Action under § 2.6(k) restricted to issuances of decisions for failure to provide information required for mining

claim recordation and failure to file within 90 days of location.

Chief, Division of Operations, Fairbanks District Office, authority to take action on the following matters listed in Part II:

Sections

2.2(b)
2.2(c)
2.3(a)
2.3(c)
2.4(a)(4)
2.6(k)
2.9 All

Action under § 2.6(k) restricted to issuances of decisions for failure to provide information required for mining claim recordation and failure to file within 90 days of location.

Chief, Branch of Land Office, in the Division of Operations, Fairbanks District Office, authority to take action on the following matters listed in Part II:

Sections

2.2(b)
2.2(c)
2.3(a)
2.3(c)
2.4(a)(4)
2.6(k)
2.9 All

Action under § 2.6(k) restricted to issuances of decisions for failure to provide information required for mining claim recordation and failure to file within 90 days of location.

4. Effective date—This redelegation of authority will become effective on January 1, 1980.

Curtis McDee,

State Director.

[FR Doc. 79-39732 Filed 12-28-79; 8:45 am]

BILLING CODE 4310-84-M

District Grazing Advisory Board, Susanville, Calif.; Notice of Meeting

Notice is hereby given in accordance with Pub. L. 92-463 that a meeting of the Susanville District Grazing Advisory Board will be held on February 5, 1980.

The meeting will begin at 10:00 a.m. in the California Pines Lodge, County Road 71, Alturas, California.

The agenda for the meeting will include:

1. District Policy on Project Maintenance and Contributions.
2. District Grazing Advisory Board Election.
3. Predator Control in AMPs.
4. Wilderness Study Area Recommendations as They Relate to AMPs.
5. Surprise/Warner Stewardship Program.
6. Status Report on Range Improvement Projects.
7. Wild Horse Program as it Relates to AMPs.
8. Tuledad/Home Camp Monitoring System.
9. Advisory Board Fund.

The meeting is open to the public. Interested persons may make oral statements to the Board between 3:30 and 4:30 p.m., or file a written statement for the Board's consideration. Anyone wishing to make an oral statement must notify the District Manager, Bureau of Land Management, P.O Box 1090, Susanville, California, 96130, by February 1, 1980. Depending on the number of persons wishing to make oral statements, a per person list limit may be established.

Summary minutes of the Board Meeting will be maintained in the District Office and will be available for public inspection and reproduction (during regular business hours) within 30 days following the meeting.

Sincerely,

Robert J. Sherve,

Acting District Manager.

[FR Doc. 79-39733 Filed 12-28-79; 8:45 am]

BILLING CODE 4310-84-M

Fish and Wildlife Service

Amendment to Endangered Species Permit

Applicant: Jackson Zoological Park, 2918 West Capitol Street, Jackson, Mississippi 39209.

The permittee requests an amendment to their Endangered Species permit for Bactrian camels (*Camelus bactrianus*) to authorize the purchase of one additional camel from Jurgen Schultz, Catskill, New York. The permittee is presently authorized to import during the course of a commerical activity two Bactrian camels from Canada.

Humane care and treatment during transport has been indicated by the applicant.

Documents and other information submitted with this application are available to the public during normal business hours in Room 601, 1000 N. Glebe Road, Arlington, Virginia, or by writing to the Director, U.S. Fish and Wildlife Service (WPO), Washington, D.C. 20240.

This application has been assigned filed number PRT 2-4398. Interested persons may comment on this application within 30 days of the date of this publication by submitting written data, views, or arguments to the Director at the above address. Please refer to the file number when submitting comments.

Dated: December 26, 1979.

Fred L. Bolwahnn,

Acting Chief, Permit Branch, Federal Wildlife Permit Office, U.S. Fish and Wildlife Service.

[FR Doc. 79-39804 Filed 12-28-79; 8:45 am]

BILLING CODE 4310-55-M

Endangered Species Permit; Receipt of Application

Applicant: Illinois Natural History Survey, River Research Laboratory, P.O. Box 599, Havana, Illinois 62644.

The applicant requests a permit to capture and release species of endangered mussels in Pool 19 of the Mississippi River for scientific purposes evaluating the effects of commercial mussel harvesting methods.

Humane care and treatment during transport has been indicated by the applicant.

Documents and other information submitted with this application are available to the public during normal business hours in Room 601, 1000 N. Glebe Road, Arlington, Virginia, or by writing to the Director, U.S Fish and Wildlife Service (WPO), Washington, D.C. 20240.

This application has been assigned file number PRT 2-6215. Interested persons may comment on this application within 30 days of the date of this publication by submitting written data, views, or arguments to the Director at the above address. Please refer to the file number when submitting comments.

Dated: December 26, 1979.

Fred L. Bolwahnn,

Acting Chief, Permit Branch, Federal Wildlife Permit Office, U.S. Fish and Wildlife Service.

[FR Doc. 79-39803 Filed 12-28-79; 8:45 am]

BILLING CODE 4310-55-M

Endangered Species Permit; Receipt of Application

Applicant: Watson T. Yoshimoto, 35 Ahi Place, Honolulu, Hawaii 96817.

The applicant requests a permit to import the trophy of one bontebok antelope (*Damaliscus dorcas dorcas*) from the Thorn Kloof ranch, Grahamstown, South Africa for enhancement of survival. The specimen taken was surplus to the established herd of the Thorn Kloof ranch.

Humane care and treatment during transport has been indicated by the applicant.

Documents and other information submitted with this application are available to the public during normal business hours in Room 601, 1000 N. Glebe Road, Arlington, Virginia, or by writing to the Director, U.S. Fish and

Wildlife Service (WPO), Washington, D.C. 20240.

This application has been assigned file number PRT 2-4604. Interested persons may comment on this application within 30 days of the date of this publication by submitting written data, views, or arguments to the Director at the above address. Please refer to the file number when submitting comments.

Dated: December 26, 1979.

Fred L. Bolwahnn,

Acting Chief, Permit Branch, Federal Wildlife Permit Office, U.S. Fish and Wildlife Service.

[FR Doc. 79-39805 Filed 12-28-79; 8:45 am]

BILLING CODE 4310-55-M

Endangered Species Permit; Receipt of Application

Applicant: Gladys Porter Zoo, 500 Ringgold Street, Brownsville, Texas 78520.

The applicant requests a permit to import female salt water crocodile (*Crocodylus porosus*) from Thailand for the purpose of enhancement of propagation.

Humane care and treatment during transport has been indicated by the applicant.

Documents and other information submitted with this application are available to the public during normal business hours in Room 601, 1000 N. Glebe Road, Arlington, Virginia, or by writing to the Director, U.S Fish and Wildlife Service (WPO), Washington, D.C. 20240.

This application has been assigned file number PRT 2-4576. Interested persons may comment on this application within 30 days of the date of this publication by submitting written data, views, or arguments to the Director at the above address. Please refer to the file number when submitting comments.

Dated: December 26, 1979.

Fred L. Bolwahnn,

Acting Chief, Permit Branch, Federal Wildlife Permit Office, U.S. Fish and Wildlife Service.

[FR Doc. 79-39806 Filed 12-28-79; 8:45 am]

BILLING CODE 4310-55-M

DEPARTMENT OF THE INTERIOR

Bureau of Land Management

DEPARTMENT OF AGRICULTURE

Forest Service

Coal Mining Unsuitability Study, Utah

December 18, 1979.

AGENCY: Bureau of Land Management, Interior; U.S. Forest Service, Agriculture.

ACTION: Notice of coal mining unsuitability study and update of management framework plan (Bureau of Land Management) and land use plan (U.S. Forest Service).

SUMMARY: As directed by the Surface Mining Control and Reclamation Act of 1977, the Bureau of Land Management and U.S. Forest Service will jointly prepare a coal mining unsuitability study on 149,529 acres in Sevier County, Utah.

Approximately 76,336 acres are administered by the Richfield District of the Bureau of Land Management. This area comprises the Forest Planning Unit, for which a management framework plan was completed in 1975. The Fishlake National Forest administers about 60,080 acres of land within the study area boundary; this land is part of the U.S. Forest Service's Salina Planning Unit, for which a land use plan and environmental impact statement were completed in 1976. The study area includes about 12,000 acres of private land, where the Federal Government has retained the mineral rights.

The purpose of the present study is to apply the 20 criteria for coal mining unsuitability (as found in CFR 3461.1) to the current management plans for the area designated in the map. This will require reviewing and updating existing information for the planning units administred by the Bureau of Land Management and U.S. Forest Service, and compiling information for the private lands on which BLM has the coal leasing responsibility. The Bureau of Land Management will work in coordination with private landowners to identify conflicts between the existing management plans and the 20 coal mining unsuitability criteria.

Based on the coal unsuitability study, the Bureau of Land Management and U.S. Forest Service will (1) update their respective management framework plan and land use plan, and (2) determine areas which are acceptable for further consideration for coal development.

The BLM Richfield District and Fishlake National Forest will coordinate in notifying all government representatives and agencies, organizations, and individuals affected by the study of the intent to update management framework and land use plans and to prepare the unsuitability study. A notice will appear in local and state-wide news media. All surface owners within the Forest Planning Unit who would be adversely affected by an unsuitability designation will be invited to consult personally with Bureau of Land Management and U.S. Forest Service personnel.

An open house will be held at BLM's Richfield District Office in March of 1980 to discuss the recommendations for unsuitable areas. At the open house, the public will also have the opportunity to review the updated resource information.

A public hearing would be held prior to the approval of the unsuitability recommendations upon request of any person having an interest which is, or may be, adversely affected by the plan.

A brochure will be distributed in the spring of 1980 which summarizes the coal mining unsuitability study for those U.S. Forest Service and BLM administered lands and private lands where BLM has the coal leasing responsibility.

For further information on the Coal Unsuitability Study for the Forest Planning Unit contact: Donald L. Pendleton, District Manager, Bureau of Land Management, 150 East 900 North, Richfield, Utah 84701.

Donald L. Pendleton,

District Manager.

J. Kent Taylor,

Forest Supervisor.

[FR Doc. 79-39730 Filed 12-28-79; 8:45 am]

BILLING CODES 4310-84, 3410-11-M

INTERNATIONAL JOINT COMMISSION—UNITED STATES AND CANADA

Lake Erie Ice Boom; Extension of Order of Approval

Notice is hereby given that, by letter of November 13, 1979, Ontario Hydro and the Power Authority of the State of New York (Power Entities) have requested a further extension for an indefinite period of this Commission's Order to Approval dated June 9, 1964 as amended May 29, 1968, October 3, 1969 and April 1, 1975. The above Order, as amended, expires on May 15, 1980. The application of November 19, 1979 does not seek to change any conditions of the present order other than the elimination of the termination date.

The Commission's present Order of Approval authorizes the Power Entities to construct and maintain a boom in Lake Erie just upstream from the entrance of the Niagara River, the purpose of which is to assist in the formation of an ice cover on Lake Erie and to reduce ice movement from the Lake to the River. In the past, excess ice in the Niagara River has severely damaged shoreline property and interferred with power production. The boom is approximately two miles in length consisting of anchored floating timbers extending from the Canadian

shore to the north end of the Old Breakwater on the United States side. The boom is installed in the late Autumn of each year and must be completely removed by May 15 of the following year, with sections being "opened" prior to the date depending on the amount of ice in Lake Erie and climate conditions.

In accordance with its Rules of Procedure, the Commission requests statements from interested persons setting forth facts and arguments bearing on the subject matter and tending to oppose or support the application in whole or in part. Closing data for receipt of such statements is February 7, 1980.

Upon receipt of such statements, the Commission will consider the desirability of requesting the Applicants to reply to them in writing before proceeding to the holding of public hearings which will be held in the vicinity of the location of the ice boom so as to provide all parties interested, convenient opportunity to be heard.

Copies of the Power Entities' letter of November 13, 1979 and the present order of Approval, as amended, are available upon request to the Secretaries of the Commission at the addresses listed below.

D. A. LaRoche,

Secretary, United States Section, International Joint Commission.

D. G. Chance,

Secretary, International Joint Commission.

December 21, 1979.

[FR Doc. 79-39738 Filed 12-28-79; 8:45 am]

BILLING CODE 4710-14-M

JOINT BOARD FOR THE ENROLLMENT OF ACTUARIES

Advisory Committee on Actuarial Examinations; Meeting

Notice is hereby given that the Advisory Committee on Actuarial Examinations will meet at the Lowes Summit Hotel, 569 Lexington Avenue, New York, New York, on January 29, 1980 beginning at 9:00 a.m.

The purpose of the meeting is to discuss possible topics for inclusion on the syllabus for the Joint Board's examinations in actuarial mathematics and methodology referred to in Title 29 U.S. Code, Sections (a)(1)(B) and (C).

The meeting will be open to the public as space is available. Time permitting, after discussion of the syllabus by Committee members, interested persons may make statements germane to this subject. Persons desiring to make such statements should advise the Committee Management Officer in writing prior to the meeting to aid in scheduling the time available and should submit the written text or, at a minimum, an outline of comments they propose to make orally. Such comments will be restricted to ten minutes in length. Any interested person may file a written statement for consideration by the Committee by sending it to Mr. Leslie S. Shapiro, Joint Board for the Enrollment of Actuaries, c/o U.S. Department of the Treasury, Washington, D.C. 20220.

Dated: December 26, 1979.

Leslie S. Shapiro,

Advisory Committee Management Officer, Joint Board for the Enrollment of Actuaries.

[FR Doc. 79-39807 Filed 12-28-79; 8:45 am]

BILLING CODE 4810-25-M

DEPARTMENT OF JUSTICE

Antitrust Division

United States v. Arden-Mayfair, Inc.; Matanuska Maid, Inc.; and Meadowmoor Alaska Dairy, Inc.; Proposed Consent Judgment and Competitive Impact Statement Thereon

Notice is hereby given pursuant to the Antitrust Procedures and Penalties Act, 15 U.S.C. Section 16(b)-(h), that a proposed consent judgment and a competitive impact statement as set out below have been filed with the United States District Court for the District of Alaska in Civil No. A78-14, *United States* v. *Arden-Mayfair, Inc.; Matanuska Maid, Inc.; and Meadowmoor Alaska Dairy, Inc.* The complaint in this case alleges that the defendant dairies conspired to fix, raise, maintain, and stabilize the wholesale prices of dairy products in south central Alaska, that they conspired to submit collusive and rigged bids to federal, state, and local agencies for dairy contracts in south central Alaska in violation of Section 1 of the Sherman Act.

The proposed judgment prohibits the defendant dairies, for ten (10) years, from entering into any agreement or understanding regarding the wholesale prices of dairy products or the allocation of customers or territories, and from submitting noncompetitive, collusive, or rigged bids for the sale of dairy products. The proposed judgment further forbids the defendants from communicating or exchanging among themselves any information on prospective prices, discounts, or other terms and conditions for the sale of dairy products.

In addition, the defendants are required by the proposed judgment to take certain affirmative steps to insure compliance with the Sherman Act and the terms of the judgment. The Department of Justice is given access under the proposed judgment to the files and records of the defendant corporations, to examine such records for compliance or non-compliance with the judgment.

Public comment is invited within the statutory 60 day comment period. Such comment and response thereto will be published in the Federal Register and filed with the Court. Comments should be directed to Anthony E. Desmond, Chief, Antitrust Division, Department of Justice, 450 Golden Gate Avenue, Box 36046, San Francisco, California 94102.

Dated: December 13, 1979.

Charles F. B. McAleer,

Special Assistant for Judgment Negotiations.

U.S. District Court, District of Alaska

United States of America, Plaintiff v. *Arden Mayfair, Inc.; Matanuska Maid, Inc.; and Meadowmoor Alaska Dairy, Inc.,* Defendants.

Civil No. A-78-14.

Stipulation

Filed: December 13, 1979.

It is stipulated by and between the undersigned parties and, by their respective attorneys, that:

1. The parties consent that a Final Judgment in the form hereto attached may be filed and entered by the Court, upon the motion of any party or upon the Court's own motion, at any time after compliance with the requirements of the Antitrust Procedures and Penalties Act [15 U.S.C. § 16] and without further notice to any party or other proceedings, provided that plaintiff has not withdrawn its consent which it may do at any time before the entry of the proposed Final Judgment by serving notice thereof on defendants and by filing said notice with the Court.

2. In the event plaintiff withdraws its consent or if the proposed Final Judgment is not entered pursuant to this Stipulation, this Stipulation shall be of no effect whatever and the making of this Stipulation shall be without prejudice to any party in this or any other proceeding.

Dated: December 13, 1979.

For the Plaintiff: John H. Shenefield, Assistant Attorney General; Joseph H. Widmar, Charles F. B. McAleer, Anthony E. Desmond, Richard B. Cohen, James V. Dick, *Attorneys, Department of Justice.*

For Defendants: Davis, Wright, Todd, Riese & Jones, *Attorneys for Meadowmoor Alaska Dairy, Inc.;* by Payton Smith, Abbott, Lynch, Farney & Rodey, *Attorneys for Matanuska Maid, Inc.,* By John W. Abbott, Sax & MacIver, *Attorneys for Matanuska Maid, Inc.,* By James L. Magee, Mitchell, Silberberg & Knupp, *Attorneys for Arden-Mayfair, Inc.,* by Edward M. Medvene.

U.S. District Court, for the District of Alaska

United States of America, Plaintiff v. *Arden-Mayfair, Inc.; Matanuska Maid, Inc.; and Meadowmoor Alaska Dairy, Inc.,* Defendants.

Civil No. A-78-14.

Final Judgment Filed: December 13, 1979

Plaintiff, United States of America, having filed its complaint herein on January 25, 1978, and plaintiff and defendants, by their respective attorneys, having consented to the entry of this Final Judgment without trial or adjudication of any issue of fact or law herein, and without this Final Judgment constituting any evidence against or an admission by any party with respect to any such issue;

Now, therefore, before the taking of any testimony, and without trial or adjudication of any issue of fact or law herein, and upon consent of the parties hereto, it is hereby,

Ordered, adjudged and decreed as follows:

I.

This Court has jurisdiction of the subject matter of this action, and of each of the parties consenting hereto. The complaint states a claim upon which relief may be granted against each defendant under Section 1 of the Sherman Act (15 U.S.C. § 1).

II

As used in this Final Judgment:

(a) "Person" means any individual, partnership, firm, corporation, association or other business or legal entity;

(b) "Dairy products" means end products which have been processed from raw milk, and related products not processed from raw milk but which are usually marketed by dairies, including, but not limited to: recombined milk; pasteurized and homogenized milk; two-percent milk; skim milk; buttermilk; whipping and table cream; half and half; sour cream; cottage cheese; chocolate and orange drinks; ice cream and ice milk; sherbets; popsicles and other similar frozen novelties;

(c) "Dairy" means any corporation, firm, or individual which processes raw milk into dairy products and/or sells and distributes dairy products to customers such as grocery stores, restaurants, hotels, schools, hospitals, military installations, other government agencies and home delivery purchasers;

(d) "Federal Institution" means any agency, instrumentality or institution of the United States of America which purchases dairy products;

(e) "State Institution" means any agency, instrumentality or institution of the State of Alaska or any political subdivision thereof, including, but not limited to, any county, city, town, municipality or school district.

(f) "Geographical area" means State of Alaska.

III

This Final Judgment applies to the defendants and to their officers, directors, agents, employees, subsidiaries, successors and assigns, and to all other persons in active concert or participation with any of them, who shall have received actual notice of this Final Judgment by personal service or otherwise. This Final Judgment shall not deprive any defendant or employee thereof of any right which it may enjoy under Section 6 of the Clayton Act (15 U.S.C. § 17) or the Capper-Volstead Act (7 U.S.C. § 291-292).

IV

Each defendant when acting as a dairy is, within the geographical area, enjoined and restrained from directly or indirectly entering into, adhering to, maintaining, enforcing or claiming any right under any contract, agreement, combination, understanding, plan or program with any person to:

(a) Fix, determine, establish, maintain, raise or stabilize the prices, discounts, or other terms or conditions for the sale of dairy products to any third person;

(b) Submit noncompetitive, collusive or rigged bids for dairy products to any federal institution;

(c) Submit noncompetitive, collusive or rigged bids for dairy products to any state institution, or to any other third person;

(d) Allocate, rotate or divide markets, customers or territories;

(e) Communicate to or exchange with any other dairy any actual or proposed price, price change, discount or other term or condition of sale at or upon which any dairy product is to be, or has been, sold to any third person.

V

Each defendant is, within the geographical area, enjoined and restrained from directly or indirectly:

(a) Communicating to or exchanging with any other dairy any information relating to price, discount or any other term or condition of sale of dairy products which has been charged or allowed or is to be charged or allowed to any customer or prospective customer.

(b) Communicating to or exchanging with any other dairy any information relating to price, discount or any other term or condition of sale of dairy products which has been charged or allowed or is to be charged or allowed by any person to any Federal or State institution.

VI

Nothing in Sections IV or V shall apply to any negotiation or communication between the defendants, or a defendant and any other dairy, the sole purpose of which is a bona fide proposed or actual purchase or sale of dairy products.

VII

Each defendant shall for a period of five (5) years from the date of entry of this Final Judgment, furnish simultaneously with each bid or quotation required to be sealed which is submitted by it for sale of dairy products to any Federal or State institution in the State of Alaska, a written certification by an officer or other authorized employee of such defendant, that such bid was not in any way the result, directly or indirectly, of any agreement, understanding or communication with any other producer, seller or distributor of dairy products.

VIII

For a period of five (5) years from the date of entry of this Final Judgment, each defendant shall preserve all written price computations and other written calculations actually performed by such defendant in the preparation and submission of any bid required to be sealed which is submitted to any Federal or State institution in the State of Alaska, and shall retain such written computations and calculations for a period of at least five (5) years from the date each bid, which is based on such computations, is submitted to any Federal or State institution in the State of Alaska.

IX

Each defendant shall:

(a) Serve within ninety (90) days after the entry of this Final Judgment a copy of this Final Judgment upon each of its officers and directors, and upon each of its employees and agents who have any responsibility for establishing prices, discounts or other terms or conditions for the sale of dairy products, or for the determination and submission of bids for State or Federal institution dairy product contracts;

(b) Within one hundred and twenty (120) days after entering of this Final Judgment, to file with this Court and to serve upon the plaintiff affidavits concerning the fact and manner of compliance with Paragraph (a) of this Section IX.

(A) Each defendant shall advise each of its officers and employees who have responsibility for or authority over the establishment of prices for dairy products and/or the determination and submission of bids for State or Federal dairy product contracts, of its and their obligations under this Final Judgment. For a period of five (5) years from the entry of this Final Judgment, each defendant shall maintain a program to insure compliance with this Final Judgment, which program shall include at a minimum the following with respect to each of the persons described immediately above:

(1) The annual distribution to them of this Final Judgment;

(2) The annual submission to them of a written directive setting forth the defendant's policy regarding compliance with the Sherman Act and with this Final Judgment, with such directive to include (a) an admonition that non-compliance with such policy and this Final Judgment will result in appropriate disciplinary action determined by the defendant and which may include dismissal, and (b) advice that the defendant's legal advisors are available at all reasonable times to confer with such persons regarding any compliance questions or problems;

(3) The imposition of a requirement that each of them sign and submit to his employer, once a year, a certificate in substantially the following form:

"The undersigned hereby (1) acknowledges receipt of a copy of the 1979 Alaska Milk Final Judgment and a written directive setting forth the Company policy regarding compliance with the antitrust laws and with such Final Judgment, (2) represents that the undersigned has read and understands such Final Judgment and directive, (3) acknowledges that the undersigned has been advised and understands that non-compliance with such policy and Final Judgment will result in appropriate disciplinary measures determined by the Company and which may include dismissal,

and (4) acknowledges that the undersigned has been advised and understands that non-compliance with the Final Judgment may also result in conviction for contempt of court and imprisonment and/or fine";

(4) The holding of one or more meetings with them to review the terms of this Final Judgment and the obligations it imposes, with such meetings to be arranged and conducted so that each of them attends at least one such meeting within a twelve-month period; and

(5) The imposition of a requirement that each of them is subject to any legally recognized privilege, to report in writing each communication of the type described in Section V of this Final Judgment with an officer, director, representative or employee of any other defendant or of any other dairy products company. Each of them is to meet this requirement by completing a written report of each such communication, within ten days of the communication, stating the date, time and place of the communication, the names of all individuals who participated in the communication, and the topics discussed during the communication. Any person required to complete reports of communications by this Paragraph and who completes no such reports during any twelve-month period must certify that he or she had no communications of the type described in Section V of this Final Judgment, or that he or she has declined to report any such communications on the basis of a specified legally recognized privilege. Each defendant shall include in its annual sworn statement required to be filed by Section X(B) of this Final Judgment, the name and address of each person who was required to submit a report or certification required by this Paragraph during the twelve-month period preceding the filing of the defendant's sworn statement and shall indicate whether or not each such person filed such a report or certificate. The defendants shall maintain for inspection by the plaintiff until the tenth anniversary of the date of entry of this Final Judgment all reports and certifications required by this Paragraph.

(B) For a period of five (5) years from the entry of this Final Judgment, each defendant shall file with the plaintiff and under seal with the Court, on or before the anniversary date of this Final Judgment, a sworn statement, by a responsible official designated by the defendant to perform such duties, setting forth all steps it has taken during the preceding year to discharge its obligations under this Section X. This statement shall be accompanied by copies of all written directives issued by the defendant concerning any of the matter covered by this Final Judgment.

XI

Upon motion of the plaintiff or upon this Court's own motion, responsible officials of each defendant may from time to time be ordered to appear before this Court to give sworn testimony relating to each such defendant's manner of compliance with the provisions of this Final Judgment.

XII

Each defendant shall require, as a condition of the sale or other disposition of all, or substantially all, of its assets of its dairy business in Alaska, that the acquiring party agree to be bound by the provisions of this Final Judgment. The acquiring party shall file with the Court, and serve upon the plaintiff, its consent to be bound by this Final Judgment.

XIII

For the purpose of determining or securing compliance with this Final Judgment and subject to any legally recognized privilege, from time to time:

(A) Duly authorized representatives of the Department of Justice shall, upon written request of the Attorney General or the Assistant Attorney General in charge of the Antitrust Division, and on reasonable notice to a defendant, made to its principal office, be permitted:

(1) Access during the office hours of such defendant, to inspect and copy all books, ledgers, accounts, correspondence, memoranda and other records and documents in the possession or under the control of such defendant, who may have counsel present, relating to any matters contained in this Final Judgment; and

(2) Subject to the reasonable convenience of such defendant and without restraint or interference from it, to interview officers, employees and agents of such defendant, who may have counsel present, regarding any such matters.

(B) Upon written request of the Attorney General or the Assistant Attorney General in charge of the Antitrust Division made to a defendant's principal office, such defendant shall submit such written reports, under oath if requested, with respect to any of the matters contained in this Final Judgment, as may be requested.

No information or documents obtained by the means provided in this Section XIII of the Final Judgment shall be divulged by any representative of the Department of Justice to any person other than a duly authorized representative of the Executive Branch of the United States, except in the course of legal proceedings to which the United States is a party, or for the purpose of securing compliance with this Final Judgment, or as otherwise required by law.

(C) If at the time information or documents are furnished by a defendant to plaintiff, such defendant represents and identifies in writing the material in any such information or documents to which a claim of protection may be asserted under Rule 26(c)(7) of the Federal Rules of Civil Procedure, and said defendant marks each pertinent page of such material, "Subject to claim of protection under Rule 26(c)(7) of the Federal Rules of Civil Procedure," then 10 days notice shall be given by plaintiff to such defendant prior to divulging such material in any legal proceeding (other than a Grand Jury proceeding) to which that defendant is not a party.

XIV

Jurisdiction is retained by this Court for the purpose of enabling any of the parties to this Final Judgment to apply to this Court at any time for such further orders and directions as may be necessary or appropriate for the construction or carrying out of this Final Judgment, for the modification of any of the provisions hereof, for the enforcement of compliance herewith, and for the punishment of violations hereof.

XV

Entry of this Final Judgment is in the public interest.

XVI

This Final Judgment shall expire ten (10) years from the date of its entry.

Dated:————.

United States District Judge.

U.S. District Court for the District of Alaska

United States of America, Plaintiff, v. *Arden-Mayfair, Inc.; Matanuska Maid, Inc.; and Meadowmoor Alaska Dairy, Inc.*, Defendants.

Civil No. A78-14.

Filed: December 13, 1979.

Competitive Impact Statement

Pursuant to Section 2(b) of the Antitrust Procedures and Penalties Act [15 U.S.C. § 16(b)], the United States hereby submits this Competitive Impact Statement relating to the proposed consent judgment submitted for entry in this civil antitrust proceeding.

I

Nature of the Proceeding

On January 25, 1978, the United States filed a civil complaint under Section 4 of the Sherman Act [15 U.S.C. § 4] alleging that defendants Arden-Mayfair, Inc., Matanuska Maid, Inc., and Meadowmoor Alaska Dairy, Inc. violated Section 1 of the Sherman Act [15 U.S.C. § 1]. The complaint alleged that defendants engaged in a combination and conspiracy in unreasonable restraint of interstate trade and commerce the substantial terms of which were: (a) to fix, raise, stabilize and maintain the wholesale prices of dairy products in south central Alaska; and (b) to submit collusive and rigged bids for the sale of dairy products under contract in south central Alaska.

In a federal grand jury indictment, also filed on January 25, 1978, the same corporate defendants were charged with a criminal violation of the Sherman Act, arising out of the same alleged conspiracy. All defendants in the criminal case were permitted to enter pleas of *nolo contendere*. In September 1978, U.S. District Court Judge James A. von der Heydt sentenced Arden-Mayfair, Inc. to pay a fine of $50,000; Matanuska Maid, Inc. was fined $45,000; and Meadowmoor Alaska Dairy, Inc. was fined $25,000.

Entry by the Court of the proposed consent judgment will terminate the remaining portions of this civil action, except insofar as the Court will retain jurisdiction over the matter for possible further proceedings which may be required to interpret, modify or enforce the judgment, or to punish alleged violations of any of the provisions of the judgment.

II

Description of Practices Involved in the Alleged Violation

Defendants are producers and/or distributors of dairy products such as milk,

ice cream and similar products which they sell as wholesalers to retail grocery stores, restaurants, hospitals, schools, and other institutions run by federal, state and local governmental agencies. Their total sales of dairy products in 1975 were approximately $18 million which accounted for approximately 95 percent of the total wholesale sales of dairy products in south central Alaska.

The government would have been prepared to prove at trial that the defendant dairies, through their top management level employees, had frequent communications and meetings among themselves about various aspects of the dairy business. Evidence would have been offered that, at various times during the alleged conspiracy, defendants' employees met, discussed, and agreed on raising wholesale prices to their customers. The government was also prepared to prove that on several occasions, representatives of the defendant corporations met, discussed and reached an understanding as to who would be the successful bidder on contracts being offered by public agencies (federal, state and local) and that there existed an agreement among the defendants to divide the public agency business among themselves pursuant to discussions among their representatives.

According to the complaint, the alleged conspiracy had the following effects: (a) competition between and among the defendants and co-conspirators in south central Alaska had been restrained; (b) purchasers of dairy products in south central Alaska had been deprived of free and open competition in the sale of dairy products; and (c) wholesale prices of dairy products in south central Alaska had been raised, fixed and maintained at artificial and noncompetitive levels.

Defendants, in their formal pleadings filed in the case, denied all the allegations in the government's complaint and were prepared to dispute the evidence to be offered by the government at a trial.

III

Explanation of the Proposed Consent Judgment

The United States and the defendants have stipulated that the proposed consent judgment, which is in a form negotiated by the parties, may be entered by the Court at any time after compliance with the Antitrust Procedures and Penalties Act. The stipulation between the parties provides that there has been no admission by any party with respect to any issue of fact or law. Under the provisions of Section 2(c) of the Antitrust Procedures and Penalties Act, entry of the proposed judgment by the Court is conditioned upon a determination by the Court that the judgment is in the public interest.

A. *Prohibited Conduct*

The proposed judgment will for ten years prohibit the defendants from entering into or adhering to any agreements or arrangements with any person to raise, fix or maintain the prices or other terms or conditions for the sale of dairy products to any third party. The judgment also prohibits the submission of any noncompetitive, collusive or rigged bid for the sale of dairy products to any agency or institution of the federal government or the State of Alaska or any other person. Also forbidden is any agreement or understanding among defendants to allocate, rotate or divide markets, customers or territories. The judgment also prohibits defendants, by agreement or individually, from communicating or exchanging among themselves any information on prospective prices, discounts or other terms and conditions for the sale of dairy products. Defendants are further enjoined from communicating or exchanging among themselves the prices or other terms of any bid to a public agency.

B. *Required Conduct*

To ensure that all bids to public agencies are made without collusion or agreement, the proposed judgment requires each defendant, for a person of five years, to submit with each sealed bid to a federal agency in Alaska a certificate stating that each such bid was not in any way the result of an agreement, understanding or communication with any other producer, seller or distributor of dairy products. False declarations made pursuant to this provision of the judgment would subject the certifying officer to criminal penalties under 18 U.S.C. § 1001. To permit monitoring of compliance with the provisions relating to competitive bidding, defendants are also required over a five-year period to preserve all written price computations and other calculations actually performed in connection with the submission of bids to public agencies, and to retain such computatons for a period of five years after the date bids are submitted.

For the purpose of broadcasting to all responsible employees the prohibitions of the judgment, defendants are required, within 60 days, to serve a copy of the judgment on each of their directors and officers, and upon each of their employees or agents who have any responsibility for establishing prices, discounts or other terms and conditions of sale. If new employees are hired in these positions in the future, defendants must also serve a copy of the judgment on these new employees. The judgment applies not only to the defendant corporations but also to their officers, directors, employees and agents who have actual notice of the judgment. Accordingly, requiring the defendants to give such notice to their responsible personnel serves two purposes: it enables the affected employees to know what activities they are prohibited from engaging in, and it permits prosecution for criminal contempt of those employees who disregard the provisions of the judgment.

The judgment further requires each defendant to maintain, for a period of five years, a program to insure compliance with the judgment. At a minimum, each program must include: (1) the annual distribution of the judgment to the officers and other company employees described above; (2) the annual submission to these officers and employees of a directive setting forth the defendant's policy for compliance with the Sherman Act and this judgment, with a warning that non-compliance will result in disciplinary action and advice that defendant's legal advisors are available to answer any questions concerning compliance; (3) the annual submission by these officers and employees of a certificate acknowledging that he has received and understands the judgment and the directive; (4) annual meetings for these officers and employees to review the terms of the judgment and the obligations it imposes; and (5) requirements that the date, time, place, participants, and topics of any communication concerning price which is prohibited by the judgment must be reported (subject to any legally recognized privilege) within ten days of its occurrence, or, if there are no such communications, annual certificates must be filed indicating that fact, and that such reports or certificates must be maintained for ten years. Each year for a period of five years, a responsible official of each defendant is also required to file with the plaintiff and under seal with the Court, a sworn statement setting forth all the steps it has taken during the preceding year to discharge these obligations, along with copies of all directives issued by the company in compliance with this judgment. Such officials may also be required to give sworn testimony before the Court relating to defendants' manner of compliance.

If any defendant sells all or substantially all of its assets of its dairy business in Alaska, the judgment compels the defendant to require the acquiring party to be bound by the provisions of the judgment and to file with the court and the plaintiff its written consent to be bound by the judgment.

The Department of Justice is given access under the proposed judgment to the files and records of the defendant corporations, to examine such records for compliance or non-compliance with the judgment.

C. *Effect of the Proposed Judgment on Competition*

The relief encompassed in the proposed consent judgment is designed to prevent a recurrence of any of the activities alleged in the complaint. The prohibitory language of the judgment will ensure that all pricing decisions in this industry shall be made independently by the individual competitors. The judgment contains sufficient record-keeping requirements and access to defendants' records to allow the Department to adequately monitor defendants' activities in the future.

Accordingly, it is the opinion of the Department of Justice that the proposed judgment is fully adequate to prevent any future antitrust violations by the defendant corporations. It is also the view of the Department that disposition of the case without additional litigation is appropriate in view of the fact that the proposed judgment includes the form and scope of relief equal to that which might be obtained after a full airing of the issues at a trial.

IV

Remedies Available to Potential Private Litigants

Section 4 of the Clayton Act [15 U.S.C. § 15] provides that any person who has been injured as a result of conduct prohibited by

the antitrust laws may bring suit in federal court to recover three times the damage such person has suffered, as well as costs and reasonable attorney fees. Prior to the filing of the complaint in this action Stayfresh of Alaska, a former competitor of the defendants, brought suit against Matanuska Maid and Arden (the action is captioned *Leon Barnes et al.* v. *Arden-Mayfair, Inc. et al.* Civ. No. C74-7565 (W.D. Wash.)). The case is presently in the discovery stage. The State of Alaska has made an Investigatory Demand on defendants pursuant to A.S. 4552 § 200.

Stayfresh, the State of Alaska, and any other potential plaintiffs will retain the same rights to seek monetary damages and equitable remedies that they would have had if the proposed judgment had not been entered. However, pursuant to Section 5(a) of the Clayton Act, amended 15 U.S.C. § 16(a), the judgment may not be used as prima facie evidence in private litigation.

V

Procedures Available for Modification of the Proposed Judgment

As provided by the Antitrust Procedures and Penalties Act, any person believing that the proposed judgment should be modified may submit written comments to Anthony E. Desmond, Department of Justice, Antitrust Division, 450 Golden Gate Avenue, San Francisco, California 94102, within the 60-day period provided by the Act. The comments and the government's responses to them will be filed with the Court and published in the Federal Register. All comments will be given due consideration by the Department of Justice, which remains free to withdraw its consent to the proposed judgment at any time prior to its entry if it should determine that some modification of the judgment is necessary to the public interest. The proposed judgment itself provides that the Court will retain jurisdiction over this action, and that the parties may apply to the Court for such orders as may be necessary or appropriate for the modification or enforcement of the judgment.

VI

Alternatives to the Proposed Consent Judgment

This case does not involve any unusual or novel issues of fact or law which might make litigation a more desirable alternative than the entry of the negotiated consent judgment. The proposed judgment contains all the relief which was requested in the complaint.

VII

Other Materials

No materials and documents of the type described in Section 2(b) of the Antitrust Procedures and Penalties Act [15 U.S.C § 16(b)] were considered in formulating this proposed judgment.

Dated: December 13, 1979.

Richard B. Cohen,

James V. Dick,

Attorneys, U.S. Department of Justice.

[FR Doc. 79-39739 Filed 12-28-79; 8:45 am]

BILLING CODE 4410-01-M

United States v. Continental Group, Inc. et al.; Proposed Consent Judgment, Stipulation, and Competitive Impact Statement as to St. Regis Paper Co.

Notice is hereby given pursuant to the Antitrust Procedures and Penalties Act, 15 U.S.C. Section 16(b) through (h), that a proposed Consent Judgment, Stipulation and Competitive Impact Statement as to St. Regis Paper Company as set out below have been filed with the United States District Court for the Eastern District of Pennsylvania in *United States of America* v. *Continental Group, Inc. et al.*, Civil Action No. 76-3377. The Complaint in this case alleged that five (5) corporations, including St. Regis Paper Company, engaged in a combination and conspiracy to fix prices of consumer bags in violation of Section 1 of the Sherman Act, 15 U.S.C. Section 1. The proposed Consent Judgment enjoins St. Regis Paper Company from directly or indirectly entering into, adhering to, maintaining, furthering, enforcing or claiming any rights under any contract, agreement, arrangement, understanding, plan, program, combination or conspiracy with any other person engaged in the production or sale of any paper and/or plastic products to: (a) raise, fix, maintain or stabilize the price or other terms or conditions for the sale of any paper and/or plastic products to any third person; (b) allocate, limit or divide territories, markets or customers for the sale of any paper and/or plastic products; (c) submit noncompetitive, collusive, rigged, cover or complimentary bids or quotations for the sale of any paper and/or plastic products; (d) refrain from submitting a bid or quotation for any sale of any paper and/or plastic products; and (e) limit the construction or utilization of production facilities for the manufacture of any paper and/or plastic products. The proposed Judgment further enjoins St. Regis Paper Company from communicating or exchanging with any other manufacturer or seller of any paper and/or plastic products any information regarding specific prices of such products or material from which such specific prices may be computed. St. Regis Paper Company is also enjoined from distributing any pricing manuals or price lists used or to be used in computing prices, terms or conditions of sale charged or to be charged for any paper and/or plastic products. St. Regis Paper Company is required to establish an antitrust compliance program which must include reporting to the Department of Justice all communications relating to prices of consumer bags and folding cartons between its employees and representatives of other consumer bag or folding carton manufacturers. Public comment is invited within the statutory 60 day comment period. Such comments and responses thereto will be published in the Federal Register and filed with the Court. Comments should be directed to John J. Hughes, Chief, Middle Atlantic Office, Antitrust Division, Department of Justice, 3430 United States Courthouse, Philadelphia, Pennsylvania 19106.

Dated: December 17, 1979

John H. Shenefield,

Assistant Attorney General, Antitrust Division.

U.S. District Court for the Eastern District of Pennsylvania

United States of America, Plaintiff, v. *Continental Group, Inc. et al.*, Defendants.

Civil Action No. 76-3377.

Filed: December 17, 1979.

Stipulation

It is stipulated by and between the undersigned parties, by their respective attorneys, that:

1. The parties consent that a Final Judgment in the form hereto attached and may be filed and entered by the Court, upon the motion of any party or upon the Court's own motion, at any time after compliance with the requirements of the Antitrust Procedures and Penalties Act (15 U.S.C. 16), and without further notice to any party or other proceedings, provided that plaintiff has not withdrawn its consent, which it may do at any time before the entry of the proposed Final Judgment by serving notice thereof on defendant and by filing that notice with the Court.

2. In the event plaintiff withdraws its consent or if the proposed Final Judgment is not entered pursuant to this Stipulation, this Stipulation shall be of no effect whatever and the making of this Stipulation shall be without prejudice to any party in this or any other proceeding. Dated: December 17, 1979.

For the plaintiff: John H. Shenefield, *Assistant Attorney General;* Joseph H. Widmar, Charles F. B. McAleer, John J. Hughes, *Attorneys, Department of Justice.* Walter L. Devany, *Attorney, Department of Justice,* Antitrust Division, Department of Justice, 3430 United States Courthouse, Independence Mall West, 601 Market Street, Philadelphia, Pennsylvania 19106.

For defendant St. Regis Paper Company: Homer Crawford, *Vice President,* St. Regis Paper Company; H. Richard Wachtel, *LeBoeuf, Lamb, Leiby & MacRae,* 140 Broadway, New York, New York, 10005. Ralph W. Brenner, *Montgomery, McCracken, Walker &*

Rhodes, Three Parkway, 20th Floor, Philadelphia, Pennsylvania 19102.

U.S. District Court for the Eastern District of Pennsylvania

United States of America, Plaintiff, v. *Continental Group, Inc. et al.*, Defendants.
Civil No. 76-3377.

Filed: December 17, 1979.

Final Judgment as to St. Regis Paper Co.

Plaintiff, United States of America, having filed its Complaint herein on October 29, 1976, and the Plaintiff and the Defendant, St. Regis Paper Company ("St. Regis"), by their respective attorneys, having consented to the entry of this Final Judgment, without trial or adjudication of any issue of fact or law herein, and without this Final Judgment constituting any evidence against or an admission by any party with respect to any such issue, and this Court, pursuant to Rule 54(b) of the Federal Rules of Civil Procedure, having determined there is no just reason for delay in entering a Final Judgment as to all of Plaintiff's claims asserted in said Complaint against said Defendant and having directed the entry of such a Final Judgment;

Now, therefore, before the taking of any testimony and without trial or adjudication of any issue of fact or law herein, and upon the consent of the parties hereto, it is hereby

Ordered, Adjudged and decreed, as follows:

I

This Court has jurisdiction of the subject matter of this action and of each of the parties consenting hereto. The Complaint states a claim upon which relief may be granted against St. Regis under Section 1 of the Sherman Act (15 U.S.C. § 1).

II

As used in this Final Judgment:

(A) "Person" means any individual, partnership, corporation, firm, association or other business or legal entity;

(B) "Product" means every product made in whole or in part of paper and/or plastic manufactured or sold by St. Regis and products of the same type, kind or character sold or manufactured by any other person.

(C) "Consumer bags" or "small bags" shall include bags which are pre-formed by a manufacturer from one or more plies of paper, and which are sometimes combined with other materials used as linings and/or coatings, and which are designed for capacities of less than twenty-five pounds. They are normally used to pre-package products which are then marketed in such bags. Consumer bags are used for packaging a variety of products including, among others, pet foods, cookies, tea, coffee, kitty litter, chemicals and agricultural products. Consumer bags also include air sickness bags.

(D) "Folding cartons" means folding cartons made principally from the category of paperboards referred to as bending box board. "Folding cartons" do not include milk cartons.

III

This Final Judgment applies to St. Regis and to its officers, directors, agents and employees, subsidiaries, successors and assigns, and to all other persons in active concert or participation with any of them who shall have received actual notice of this Final Judgment by personal serve or otherwise; provided, however, that this Final Judgment shall not apply to transactions or communications solely between St. Regis and its officers, directors, employees, agents, or to transactions or communications between or among St. Regis and its parent company, subsidiaries or companies more than fifty percent (50%) owned by St. Regis or its parent, or to activities outside the United States which do not affect the commerce of the United States.

IV

St. Regis is enjoined and restrained from directly or indirectly entering into, adhering to, maintaining, furthering, enforcing or claiming any rights under any contract, agreement, arrangement, understanding, plan, program, combination or conspiracy with any other person engaged in the production or sale of any product to:

(A) Raise, fix, maintain or stabilize the price or other terms or conditions for the sale of any product to any third person;

(B) Allocate, limit or divide territories, markets or customers for the sale of any product;

(C) Submit noncompetitive, collusive, rigged, cover, or complimentary bids or quotations for the sale of any product;

(d) Refrain from submitting a bid or quotation for any sale of any product;

(E) Limit the construction or utilization of production facilities for the manufacture of any product.

V

St. Regis is enjoined and restrained from:

(A) Communicating to, requesting from or exchanging with any other manufacturer or seller of any product manufactured by both parties to the communication:

(1) Any price, price change, discount or other term or condition of sale charged or quoted to any customer or potential customer for such product whether communicated in the form of a specific price or in the form of information from which such specific price may be computed;

(2) Any future price, price change, discount, or other term or condition of sale to be charged or quoted to any customer or potential customer for such product whether communicated in the form a a specific price or in the form of information from which such specific price may be computed;

(3) Any plan or changes or revisions in the prices at which, or the terms or conditions of sale upon which, any product is sold or offered for sale; and

(4) Any formula utilized for computing costs or prices or methods or means for computing prices at which any product is sold.

(B) Distributing to any manufacturer of consumer bags any pricing manual, price lists, or similar pricing material which is used, has been used or will be used in computing prices or terms or conditions of sale charged or to be charged for consumer bags;

(C) Distributing to any manufacturer of any product manufactured by both St. Regis and the other manufacturer any pricing manual, price lists, or similar pricing material which is used, has been used or will be used in computing prices or terms or conditions of sale charged or to be charged for such product.

VI

Nothing contained in Section V of this Final Judgment shall prohibit St. Regis' negotiations, arrangements or communications with any St. Regis agent, broker, distributor or representative, or with another manufacturer or seller of any product manufactured by St. Regis or with any agent, broker, distributor or representative of such manufacturer or seller solely in connection with *bona fide* proposed or actual purchases from or sale to that manufacturer or seller except as prohibited by Paragraph (B) of Section V of this Final Judgment. Each such negotiation, arrangement or communication concerning consumer bags shall be reported in writing to his or her immediate superior stating the date, time and place of the negotiation, communication or arrangement, whether it was oral or written, the name and title of the other person or persons involved in the negotiation, arrangement or communication, a brief description of the transaction involved, and the price information transmitted to or from St. Regis; such reports shall be retained in the files of St. Regis and copies thereof shall be delivered to the antitrust Division by St. Regis on each anniversary date of this Final Judgment along with a certification by the responsible officer of St. Regis stating that all reports responsive to this proviso have been delivered to the Antitrust Division without comparison of such reports with reports filed or to be filed with the Antitrust Division by any other company.

VII

(A) Within sixty (60) days after the date of entry of this Final Judgment, St. Regis shall furnish a conformed copy hereof to:

(1) Each of its officers and directors;

(2) Each officer and director of a domestic subsidiary engaged in the manufacture of sale of any product;

(3) Each of its employees and managing agents who is engaged in, or has responsibility for or authority over, the pricing of any product;

(4) Each employee and managing agent of a domestic subsidiary who is engaged in, or has responsibility for or authority over, the pricing of any product:

and shall advise and inform each such person that violation of this Final Judgment could result in a conviction for contempt of court and imprisonment and/or fine.

(B) Within ninety (90) days after the date of entry of this Final Judgment, St. Regis shall file with this Court and serve upon the Plaintiff and affidavit concerning the fact and manner of compliance with Paragraph (A) of this Section.

(C) Within thirty (30) days after each such person becomes an officer, director, employee or agent of the kind described in Paragraph (A), St. Regis shall furnish to him

or her a conformed copy of this Final Judgment together with the advice specified by said Paragraph (A).

(D) Each person receiving from St. Regis a conformed copy of this Final Judgment in accordance with this paragraph shall furnish St. Regis a receipt therefor which St. Regis shall retain in its files.

VIII

(A) St. Regis shall advise each of its officers who has management responsibility for the manufacture or sale of any product, and each of its employees and managing agents who is engaged in, or who has responsibility for or authority over, the pricing of any product, of its and their obligations under this Final Judgment. St. Regis shall maintain a program to insure compliance with this Final Judgment, which program shall include at a minimum the following with respect to each of the persons described immediately above:

(1) The annual distribution to them of this Final Judgment;

(2) The annual submission to them of a written directive setting forth St. Regis' policy regarding compliance with the Sherman Act and with this Final Judgment, with such directive to include (a) an admonition that non-compliance with such policy and this Final Judgment will result in appropriate disciplinary action determined by St. Regis and which may include dismissal, and (b) advice that St. Regis' legal advisors are available at all reasonable times to confer with such persons regarding any compliance questions or problems;

(3) The imposition of a requirement that each of them sign and submit to St. Regis, once a year, a certificate in substantially the following form:

"The undersigned hereby (1) acknowledges receipt of a copy of the Final Judgment as to St. Regis Paper Company entered in *United States* v. *Continental Group, Inc. et al.*, E.D. Pa., Civil Action No. 76-3377 and a written directive setting forth the St. Regis policy regarding compliance with the antitrust laws and with such Final Judgment, (2) represents that the undersigned has read and understands such Final Judgment and directive, (3) acknowledges that the undersigned has been advised and understands that non-compliance with such policy and Final Judgment will result in appropriate disciplinary measures determined by St. Regis and which may include dismissal, and (4) acknowledges that the undersigned has been advised and understands that non-compliance with the Final Judgment may also result in conviction for contempt of court and imprisonment and/or fine";

(4) The holding of one or more meetings with them to review the terms of this Final Judgment and the obligations it imposes, with such meetings to be arranged and conducted so that each of them attends at least one such meeting within a twelve (12) month period; and

(5) The imposition of a requirement that for a period of five (5) years from the entry of this Final Judgment each of them shall report, subject to any legally recognized privilege, to his or her immediate superior in writing each communication not permissable under Section VI hereof with any officer, director, representative or employee of any other company which manufactures any product manufactured by St. Regis, if such communication in any way involves prices or any of the terms or conditions of sale of such products or any information from which a price or term or condition of sale may be computed. Each of them is to meet this requirement by completing a written report of each such communication, within thirty (30) days of the communication, stating the date, time and place of the communication, whether it was oral or written, the name and title of the other person or persons involved and a brief description of the topics discussed during the communication. Any person required to complete reports of communications by this Paragraph and who completes no such reports during any twelve (12) month period must certify that he or she had no communications of the type described in this Paragraph. Each such report and certification shall be retained in the files of St. Regis and copies thereof shall be delivered to the Antitrust Division by St. Regis on each anniversary date of this Final Judgment along with a certification by the responsible officer of St. Regis stating that all reports responsive to this proviso have been delivered to the Antitrust Division without comparison of such reports with reports filed or to be filed with the Antitrust Division by any other company. St. Regis shall include in its annual sworn statement required to be filed by Paragraph VIII(B) of this Final Judgment, the name and address of each person, if any, who has failed to submit a report or certification required by this Paragraph during the twelve (12) month period preceding the filing of St. Regis' sworn statement and the reason given or privilege claimed by each such person for not filing a report or certification.

(B) St. Regis shall file with the Court and with Plaintiff on or before each anniversary date of this Final Judgment, a sworn statement, by a responsible official designated by St. Regis to perform such duties, setting forth all steps it has taken during the preceding year to discharge its obligations under this Section VIII. This statement shall be acompanied by copies of all written directives issued by St. Regis during the prior year with respect to compliance with the antitrust laws and with this Final Judgment.

(C) Upon order of the Court, on motion by the Plaintiff for good cause shown, the designated official shall appear before the Court to give sworn testimony on the manner of compliance with the Final Judgment.

IX

St. Regis shall require, as a condition of the sale or other disposition of all, or substantially all, of the assets used by it in the design, printing, manufacture and sale of consumer bags or folding cartons, that the acquiring party agree to be bound by the provisions of this Final Judgment, and that such agreement be filed with the Court.

X

For the purpose of determining or securing compliance with this Final Judgment, and subject to any legally recognized privilege, from time to time:

(A) Duly authorized representatives of the Department of Justice shall, upon written request of the Attorney General or of the Assistant Attorney General in charge of the Antitrust Division, and on reasonable notice to St. Regis made to its principal office, be permitted:

(1) Access, during office hours of St. Regis, to inspect and copy all books, ledgers, accounts, correspondence, memoranda and other records and documents in the possession or under the control of St. Regis, which may have counsel present, relating to any matters contained in this Final Judgement; and

(2) Subject to the reasonable convenience of St. Regis and without restraint or interference from it, to interview officers, employees and agents of St. Regis, who may have counsel present, regarding any such matters.

(B) Upon the written request of the Attorney General or of the Assistant Attorney General in charge of the Antitrust Division made to St. Regis' principal office, St. Regis shall submit such written reports, under oath if requested, with respect to any of the matters contained in this Final Judgment, as may be requested.

No information or documents obtained by the means provided in this Section X of the Final Judgment shall be divulged by any representative of the Department of Justice to any person other than a duly authorized representative of the Executive Branch of the United States, except in the course of legal proceedings to which the United States is a party, or for the purpose of securing compliance with this Final Judgment, or as otherwise required by law.

(C) If at any time information or documents are furnished by St. Regis to Plaintiff and St. Regis marks each pertinent page of such material "Confidential", then twenty (20) days notice shall be given by Plaintiff to St. Regis prior to divulging such material in any legal proceeding (other than a grand jury proceeding) to which St. Regis is not a party, or pursuant to a request under the Freedom of Information Act.

XI

Notwithstanding any of the provisions of this Final Judgment, the Plaintiff shall not be estopped from instituting any civil or ciminal proceeding against St. Regis for any violation of the antitrust laws, or obtaining any other, additional or further relief in any such proceeding.

XII

Jurisdiction is retained by this Court for the purpose of enabling either of the parties to this Final Judgment to apply to this Court at any time for such further orders or directions as may be necessary or appropriate for the construction or carrying out of this Final Judgment, for the modification of any of the provisions hereof, for the enforcement of compliance herewith, and for the punishment of violations hereof.

XIII

This Final Judgment will expire on the tenth anniversary of the date of entry except that as to "folding cartons" this Final

Judgment will expire on the twenty-fifth anniversary of the date of entry.

XIV

Entry of this Final Judgment is in the public interest.

Dated: ————.

United States District Judge.

U.S. District Court of the Eastern District of Pennsylvania

United States of America, Plaintiff, v. *Continental Group, Inc.; American Bag & Paper Corp.; Chase Bag Company; Harley Corporation; and St. Regis Paper Company*, Defendants.

Civil No. 76-3377.

Filed: December 17, 1979.

Competitive Impact Statement

Pursuant to Section 2 of the Antitrust Procedures and Penalties Act, 15 U.S.C. § 16(b)-(h), the United States files this Competitive Impact Statement relating to the proposed Final Judgment as to St. Regis Paper Company submitted for entry in this civil antitrust proceeding.

I

Nature and Purpose of the Proceedings

On October 29, 1976 the United States filed a civil antitrust Complaint alleging that five corporations combined and conspired to fix prices of consumer bags in violation of Section 1 of the Sherman Act, 15 U.S.C. § 1. The Complaint alleges that beginning at least as early as 1950 and continuing thereafter until the date of the filing of the Complaint the Defendants engaged in a combination and conspiracy to raise, fix, maintain and stabilize the prices and terms and conditions of sale of consumer bags.

The Complaint seeks a judgment by the Court declaring that the Defendants engaged in an unlawful combination and conspiracy in restraint of trade in violation of the Sherman Act. It also seeks an order by the Court to enjoin and restrain the Defendants from any such activities or other activities having a similar purpose or effect in the future.

The corporations named in the Complaint are Continental Group, Inc.; American Bag & Paper Corp.; Chase Bag Company; Harley Corporation and St. Regis Paper Company. Defendant St. Regis was tried and acquitted of criminal felony charges with respect to this alleged conspiracy. This civil action had been held in abeyance until the criminal charge was resolved.

II

Description of the Practices Giving Rise to the Alleged Violations of the Antitrust Laws

As defined in the Complaint, consumer bags, also known in the trade as "small bags", are made from one or more plies of paper which may be combined with other materials used as linings and/or coatings. Consumer bags are preformed by the manufacturer in many styles and sizes according to consumer specifications. Most consumer bags have printed exterior designs as specified by the customer and are designed for capacities of less than 25 pounds. They are normally used to prepackage products which are then marketed in such bags. Consumer bags are used for packaging a variety of products including, among others, pet foods, cookies, tea, coffee, kitty litter, chemicals, and agricultural products. Consumer bags also include air sickness bags.

The Complaint alleges that the Defendant corporations accounted for aggregate sales of consumer bags of approximately $42 million in 1974. During the period of time covered by the Complaint the Defendants sold and shipped substantial quantities of consumer bags, in a continuous and uninterrupted flow of interstate commerce to customers located in States other than the States in which such bags were manufactured.

The Complaint alleges that the Defendants engaged in a combination and conspiracy beginning at least as early as 1950 and continuing thereafter until the date of filing of the Complaint consisting of an agreement, understanding, and concert of action among themselves and co-conspirators, the substantial terms of which were to raise, fix, maintain, and stabilize the prices and terms and conditions of sale of consumer bags.

The Complaint further alleges that the combination and conspiracy had the following effects, among others:

1. Prices and terms and conditions of sale of consumer bags sold by the defendants and various co-conspirators have been raised, fixed, maintained and stabilized at artificial and non-competitive levels;

2. Buyers of consumer bags have been deprived of the benefits of free and open competition in the purchase of consumer bags; and

3. Competition among the defendants and various co-conspirators in the sale of consumer bags has been restrained.

III

Explanation of the Proposed Final Judgment

The United States and the Defendant, St. Regis Paper Company, have stipulated that a Final Judgment, in the form filed with the Court, may be entered by the Court at any time after compliance with the Antitrust Procedures and Penalties Act, 15 U.S.C. 16(b)-(h). The proposed Final Judgment provides that the entry of the Final Judgment does not constitute any evidence against or an admission by any party with respect to any issue of law or fact. Under the provisions of Section 2(e) of the Antitrust Procedures and Penalties Act, entry of the proposed Final Judgment is conditioned upon the Court finding that its entry will be in the public interest.

Although the Complaint sought relief only with respect to consumer bags, the injunctive provisions apply to every product made in whole or in part of paper and/or plastic manufactured and sold by St. Regis, including folding cartons, and products of the same type, kind or character, sold or manufactured by any other person. St. Regis was a defendant in both a criminal case, *United States* v. *Alton Box Board Company*, Criminal No. 76 CR 199, N.D. Ill., Eastern Division, February 18, 1976, and a companion civil case, *United States* v. *Alton Box Board Company*, Civil No. 76 C 597, N.D. Ill., Eastern Division, February 18, 1976. These cases charged that the Defendants conspired to fix the prices of folding cartons. In the criminal case, St. Regis entered a plea of *nolo contendere* and was fined $25,000. In the civil case, St. Regis was a party to a Final Judgment covering folding cartons entered by the United States District Court for the Northern District of Illinois on September 26, 1979. As the proposed Final Judgment gives broader relief against St. Regis than does the Final Judgment entered in *United States* v. *Alton Box Board Company*, Civil No. 76 C 597, N.D. Ill., Eastern Division, the Government and St. Regis after entry of this proposed Final Judgment will jointly petition the Court for the Northern District of Illinois to dismiss St. Regis as a Defendant in *United States* v. *Alton Box Board Company*, Civil No. 76 C 597, N.D. Ill., Eastern Division, and as a party to the Final Judgment entered therein. This will avoid any inconsistencies in St. Regis' obligations under the two Judgments.

The United States' complaint sought relief only with respect to consumer bags. St. Regis indicated that it believed it desirable to apply the prophylactic provisions of the decree on a company-wide basis and that it would be willing to enter into a decree covering all paper and/or plastic products manufactured or sold by St. Regis. The entry of a decree relating to all such products therefore does not indicate that the United States would have sought relief with respect to products other than consumer bags.

The proposed Final Judgment contains two principal forms of relief. First, St. Regis is enjoined from repeating the behavior which characterized the consumer bag conspiracy and from certain other conduct constituting *per se* violations of Section 1 of the Sherman Act. Second, the proposed Final Judgment places affirmative burdens on St. Regis to pursue a compliance program directed toward avoiding a repetition of the consumer bag price-fixing conspiracy.

A. Prohibited Conduct

Section IV of the proposed Final Judgment enjoins St. Regis from directly or indirectly entering into, adhering to, maintaining, furthering, enforcing or claiming any rights under any contract, agreement, arrangement, understanding, plan, program, combination or conspiracy with any other person engaged in the production or sale of any paper and/or plastic products to raise, fix, maintain, or stabilize the price or other terms or conditions of sale of any paper and/or plastic products to any third person; allocate, limit, or divide territories, markets, or customers for the sale of any paper and/or plastic products; submit non-competitive, collusive, rigged, cover or complimentary bids or quotations for the sale of any paper and/or plastic products; refrain from submitting a bid or quotation for any sale of any paper and/or plastic products; and limit the construction or utilization or production facilities for the manufacture of any paper and/or plastic products.

Section V(A) of the proposed Final Judgment also enjoins St. Regis from communicating to, requesting from or

exchanging with any manufacturer or seller of any paper and/or plastic products any past, present, or future price, price change, discount or other terms or conditions of sale charged or quoted to any customer or potential customer whether communicated in the form of a specific price or in the form of information from which such specific price may be computed; any plan, change or revision in the prices at which or the terms or conditions of sale upon which any paper and/or plastic products are sold or offered for sale; and any formula utilized for computing the cost or price or methods or means for computing price at which any paper and/or plastic products are sold.

Section V(B) restrains St. Regis from distributing to any manufacturer of consumer bags any pricing manual or any price list for consumer bags. Section V(C) restrains St. Regis from distributing to any manufacturer of any paper and/or plastic products manufactured by both St. Regis and other manufacturers, any pricing manual or any price list for such paper and/or plastic products.

The only exception to the broad prohibitions of Section V of the Judgment is contained in Section VI and permits necessary communications in connection with *bona fide* proposed or actual purchase or sales transactions between the parties to such communications. Even on *bona fide* proposed or actual purchase or sales transactions, St. Regis is prohibited from distributing pricing manuals or price lists for consumer bags and must report all communications between a St. Regis employee and a person with whom St. Regis has reason to believe sells consumer bags. These reports shall be made in writing to his or her immediate superior setting forth the details of the negotiation, arrangement, or communication. Such reports shall be retained by St. Regis and copies delivered annually to the Antitrust Division without comparison with reports filed or to be filed with the Antitrust Division by any other company.

B. St. Regis' Affirmative Obligations

Sections VII and VIII require that St. Regis adopt an affirmative compliance program directed toward ensuring that its employees comply with the antitrust laws.

Section VII requires St. Regis to furnish a copy of the Judgment within sixty (60) days of the date of entry to each of its officers and directors and each of its employees who is engaged in or has responsibility for or authority over pricing of any paper and/or plastic products; obtain and retain a written receipt therefor; and file with the Court and serve on the Plaintiff an affidavit as to the fact and manner of its compliance with this provision. St. Regis is required to furnish a copy of the Final Judgment to each new officer, director and employee of the kind described above, and obtain and retain a written receipt therefor. St. Regis is also required to advise and inform each such person that violation of this Final Judgment could result in a conviction for contempt of court and imprisonment and/or fine.

Section VIII requires St. Regis to distribute annually the Final Judgment and its written Antitrust Compliance Program to each employee of the type described in the preceding paragraph and hold annual meetings with these employees to review the terms and obligations of the decree. These employees must annually certify that they have read and understand the Final Judgment and St. Regis' compliance program and that they realize their failure to comply with the Final Judgment may result in disciplinary action by St. Regis, including dismissal, and may place them in contempt of court. Additionally, Subsection VIII(A)(5) requires for a five (5) year period that such employees must file written reports of all communications with any other paper and/or plastic product manufacturers during which any prices or terms or conditions of sale of any paper and/or plastic products were discussed.

Any employee who files no reports during any twelve (12) month period must certify that he has had no communications of the type required to be reported. St. Regis must retain each such report and certification and deliver a copy thereof to the Plaintiff annually.

Section VIII(B) of the proposed Judgment also requires St. Regis to file each year with the Plaintiff and the Court a sworn statement setting forth all steps it has taken during the preceding year to discharge its obligations under Section VIII of the Judgment.

Finally, under Section X of the Judgment, the Justice Department will have access, upon reasonable notice, to St. Regis' records and personnel in order to determine St. Regis' compliance with the Judgment.

C. Scope of the Proposed Judgment

(1) *Persons Bound by the Decree.* The proposed Judgment expressly provides in Section III that its provisions apply to St. Regis and to each of its officers, directors, agents and employees, subsidiaries, successors and assigns and to all other persons who receive actual notice of the terms of the Judgment except that the Final Judgment does not apply to transactions solely between St. Regis and its employees or to transactions between St. Regis, its parent company, or wholly or partially-owned subsidiaries.

In addition, Section IX of the Judgment prohibits St. Regis from selling or transferring all or substantially all of its assets used in its consumer bag or folding carton business unless the acquiring party files with the Court its consent to be bound by the provisions of the Judgment.

(2) *Geographic Coverage of the Decree.* The provisions of the proposed Judgment apply to acts or transactions within the United States, its territories and possessions, but not to activities outside the United States which do not affect the commerce of the United States.

(3) *Duration of the Judgment.* Section XII provides that the Judgment will expire on the tenth anniversary of its entry except that as to folding cartons it will expire on the twenty-fifth anniversary of the date of entry. As explained above, the reporting provisions of Subsection VIII(A)(5) of the Judgment will terminate in five (5) years.

D. Effect of the Proposed Judgment on Competition

The prohibition terms of Sections IV and V of the Judgment are designed to ensure that St. Regis will act independently in determining the prices, terms and conditions at which it will sell or offer to sell any paper and/or plastic products. The affirmative obligations of Sections VI, VII and VIII are designed to ensure that St. Regis' employees are aware of their obligations under the decree in order to avoid a repetition of behavior that occurred in the consumer bag and folding carton industries during the conspiracy periods. Compliance with the proposed Judgment will prevent price collusion by St. Regis with other paper and/or plastic product manufacturers in the sale of any paper and/or plastic products.

IV

Remedies Available to Potential Private Plaintiffs

After entry of the proposed Final Judgment, any potential private plaintiff who might have been damaged by the alleged violations will retain the same right to sue for monetary damages and any other legal and equitable remedies which he may have had if the proposed Judgment had not been entered. The proposed Judgment may not be used, however, as *prima facie* evidence in private litigation, pursuant to Section 5(a) of the Clayton Act, as amended, 15 U.S.C § 16(a).

V

Procedures Available for Modification of the Proposed Consent Judgment

The proposed Final Judgment is subject to a stipulation between the Government and St. Regis which provides that the Government may withdraw its consent to the proposed Judgment any time before the Court has found that entry of the proposed Judgment is in the public interest. By its terms, the proposed Judgment provides for the Court's retention of jurisdiction of this action in order to permit any of the parties to apply to the Court for such orders as may be necessary or appropriate for the modification of the Final Judgment.

As provided by the Antitrust Procedures and Penalties Act (15 U.S.C § 16), any person wishing to comment upon the proposed Judgment may, for a sixty-day period subsequent to the publishing of this document in the Federal Register, submit written comments to the United States Department of Justice, Attention: John J. Hughes, Chief, Middle Atlantic Office, Antitrust Division, 3430 United States Courthouse, Independence Mall West, 601 Market Street, Philadelphia, Pennsylvania 19106. Such comments and the Government's response to them will be filed with the Court and published in the Federal Register. The Government will evaluate all such comments to determine whether there is any reason for withdrawal of its consent to the proposed Judgment.

IV

Alternative to the Proposed Final Judgment

The alternative to the proposed Final Judgment considered by the Antitrust Division was a full trial of the issues on the

merits and on relief. The Division considers the substantive language of the proposed Judgment to be of sufficient scope and effectiveness to make litigation on the issues unnecessary, as the Judgment provides appropriate relief against the violations alleged in the Complaint. In fact, the proposed Final Judgment affords much broader relief than would have been secured after a full trial on the merits as it covers not only consumer bags but all other paper and/or plastic products manufactured by St. Regis.

VII

Determinative Materials and Documents

No materials or documents were considered determinative by the United States in formulating the proposed Final Judgment. Therefore, none is being filed pursuant to the Antitrust Procedures and Penalties Act, 15 U.S.C. § 16(b).

John J. Hughes,

Raymond D. Cauley,

Attorneys, Department of Justice.

Walter L. Devany,

Attorney, Department of Justice, Antitrust Division, 3430 United States Courthouse, Independence Mall West, 601 Market Street, Philadelphia, Pa. 19106.

[FR Doc. 79-39738 Filed 12-28-79; 8:45 am]

BILLING CODE 4410-01-M

Attorney General

Amended Consent Decree in Action Concerning Discharges From Blue Plains Sewage Treatment Plant

In accordance with Departmental Policy, 28 CFR § 50.7, 38 FR 19029, notice is hereby given that a proposed amended consent decree in *State Water Control Board et al.* v. *Washington Surburban Sanitary Commission et al.* has been lodged with the United States District Court for the District of Columbia. The amended decree changes portions of the original decree relating to sludge disposal and flow allocation.

The Department of Justice will receive for a period of thirty (30) days from the date of this notice, written comments relating to the proposed stipulation and consent decree. Comments should be addressed to the Assistant Attorney General of the Land and Natural Resources Division, Department of Justice, Washington, D.C. 20530 and should refer to the *State Water Control Board et al.* v. *Washington Suburban Sanitary Commission et al.*, D.J. Ref. 90-5-1-1-353.

The proposed stipulation and consent decree may be examined at the Pollution Control Section, Land and Natural Resources Division of the Department of Justice, Room 2644, Ninth Street and Pennsylvania Avenue, N.W., Washington, D.C. 20530 and at the Region III office of the Environmental Protection Agency, 6th & Walnut Streets, Philadelphia, Pennsylvania 19106.

A copy of the proposed stipulation and consent decree may be obtained in person or by mail from the Pollution Control Section, Land and Natural Resources Division of the Department of Justice. In requesting a copy, please enclose a check in the amount of $1.00 (10 cents per page reproduction charge) payable to the Treasurer of the United States.

Angus Macbeth,

Deputy Assistant Attorney General, Land and Natural Resources Division.

[FR Doc. 79-39737 Filed 12-28-79; 8:45 am]

BILLING CODE 4410-01-M

MINIMUM WAGE STUDY COMMISSION

Meeting

In accordance with section 10(a)(2) of the Federal Advisory Committee Act (Pub. L. 92-463), announcement is made of the following Commission meeting:

Name: Minimum Wage Study Commission.
Date: January 8, 1980.
Time: 1 p.m.
Place: 1430 K St., N.W., Suite 1102, Washington, DC.

Original notification of this meeting appeared in the Federal Register November 30, 1979.

Proposed Agenda:

1. Pending Business.
2. Brief Discussion of Working Papers on Noncompliance and Effects of Minimum Wage on Youth Employment and Unemployment.
3. Format of Final Report.
4. Additional Study Areas.

Next meeting of the Commission will be held Tuesday, Feb. 12, 1980.

All communications regarding this Commission should be addressed to: Mr. Louis E. McConnell, Executive Director, 1430 K Street, N.W., Washington, DC 20005; telephone (202) 376-2450.

Louis E. McConnell,

Executive Director.

[FR Doc. 79-39384 Filed 12-28-79; 8:45 am]

BILLING CODE 4510-23-M

NATIONAL FOUNDATION FOR THE ARTS AND THE HUMANITIES

Literature Panel; Meeting

Pursuant to section 10(a)(2) of the Federal Advisory Committee Act (Pub. L. 92-463), as amended, notice is hereby given that a meeting of the Literature Panel to the National Council on the Arts will be held Jan. 17, 1980 from 3:00 p.m.-6:30 p.m.; Jan. 18, 1980 from 9:00 a.m.-6:00 p.m.; Jan. 19, 1980 from 9:00 a.m.-5:30 p.m.; and Jan. 20, 1980 fom 9:00 a.m.-1:30 p.m. in Room 1422, Columbia Plaza Office Building, 2401 E St., N.W., Washington, D.C.

A portion of this meeting will be open to the public on Jan. 20, 1980 for the discussion of policy.

The remaining sessions of this meeting on Jan. 17, 1980 from 3:00 p.m.-6:30 p.m.; Jan. 18, 1980 from 9:00 a.m.-6:00 p.m.; Jan. 19, 1980 from 9:00 a.m.-5:30 p.m.; and Jan. 20, 1980 from 9:00 a.m.-12:30 p.m. are for the purpose of Panel review, discussion, evaluation, and recommendation on applications for financial assistance under the National Foundation on the Arts and the Humanities Act of 1965, as amended, including discussion of information given in confidence to the agency by grant applicants. In accordance with the determination of the Chairman published in the Federal Register March 17, 1977, these sessions will be closed to the public pursuant to subsections (c)(4), (6) and 9(b) of section 552b of Title 5, United States Code.

Further information with reference to this meeting can be obtained from Mr. John H. Clark, Advisory Committee Management Officer, National Endowment for the Arts, Washington, D.C. 20506, or call (202) 634-6070.

December 20, 1979.

John H. Clark,

Director, Office of Council and Panel Operations, National Endowment for the Arts.

[FR Doc. 79-39740 Filed 12-28-79; 8:45 am]

BILLING CODE 7537-01-M

Music Panel (Orchestra Section); Meeting

Pursuant to section 10(a)(2) of the Federal Advisory Committee Act (Pub. L. 92-463), as amended, notice is hereby given that a meeting of the Music Panel (Orchestra Section) to the National Council on the Arts will be held January 14, 1980 from 9:00 a.m.-5:30 p.m.; January 15, 1980 from 9:00 a.m.-5:30 p.m.; January 16, 1980 from 9:00 a.m.-5:30 p.m. in Room 1422, Columbia Plaza Office Buidling, 2401 E St., N.W., Washington, D.C.

A portion of this meeting will be open to the public on Jan. 15, 1980 from 9:00 a.m.-5:30 p.m., and Jan. 16, 1980 from 9:00 a.m.-5:30 p.m. Policy and guidelines will be the topics for discussion.

The remaining sessions of this meeting on Jan. 14, 1980 from 9:00 a.m.-5:30 p.m. are for the purpose of Panel review, discussion, evaluation, and recommendation on applications for financial assistance under the National Foundation on the Arts and the Humanities Act of 1965, as amended,

including discussion of information given in confidence to the agency by grant applicants. In accordance with the determination of the Chairman published in the Federal Register March 17, 1977, these sessions will be closed to the public pursuant to subsections (c)(4), (6) and 9(b) of section 552b of Title 5, United States Code.

Further information with reference to this meeting can be obtained from Mr. John H. Clark, Advisory Committee Management Officer, National Endowment for the Arts, Washington, D.C. 20506, or call (202) 634-6070.

John H. Clark,

Director, Office of Council and Panel Operations, National Endowment for the Arts.

December 19, 1979.

[FR Doc. 79-39741 Filed 12-28-79; 8.45 am]

BILLING CODE 7537-01-M

NATIONAL SCIENCE FOUNDATION

Proposed Guidelines and Criteria for the State Science, Engineering, and Technology Program

AGENCY: National Science Foundation.

ACTION: Notice of Proposed Guidelines and Criteria for the State Science, Engineering, and Technology Program.

SUMMARY: The National Science Foundation is proposing the guidelines and criteria set out below to implement the State Science, Engineering, and Technology Program authorized under Pub. L. 96-44. Funds to carry out this Program were appropriated in Pub. L. 96-103.

DATES: Interested parties are invited to submit written comments and suggestions with respect to these proposed guidelines and criteria by January 30, 1980.

ADDRESS: Comments should be addressed to Director, Intergovernmental Program, Division of Intergovernmental Science and Public Technology, National Science Foundation, 1800 G Street, N.W., Washington, D.C. 20550.

FOR FURTHER INFORMATION CONTACT: Edward T. Kelly or Raymond W. Cox III at the above address or (202) 634-7996.

SUPPLEMENTAL INFORMATION: The State Science, Engineering, and Technology (SSET) Program covered by these proposed guidelines and criteria continues, with the implementation phase, the study and planning phase of the Program previously authorized by the National Science Foundation Authorization Act for Fiscal Year 1977 (Pub. L. 94-471). The intent of the study and planning phase of the SSET Program was to assist States in identifying the need for, and the contributions that can be made by, policy analyses, research results, and scientific, engineering, and technical resources in their policy-formulation and decision-making processes, in both the Executive and Legislative Branches.

In accordance with the provisions of OMB-A85 (revised), these proposed guidelines and criteria also have been made available to the Advisory Commission on Intergovernmental Relations for coordination with state and local government associations.

The comments received will be available for public inspection at the above address between the hours of 9:30 AM and 4:00 PM, Monday through Friday (except holidays) until thirty days after the promulgation of the final guidelines and criteria.

It is intended that the effective date of these guidelines and criteria will be the date of promulgation of the final guidelines and criteria in the Federal Register or the date of the issuance by the Foundation of a Program Announcement on the State Science, Engineering, and Technology Program, whichever come first.

The text of Proposed Guidelines and Criteria is as follows:

Section 1. Authority. The authority for the State Science, Engineering, and Technology (SSET) Program is the National Science Foundation Authorization Act for Fiscal Year 1980 (Pub. L. 96-44). Funds to carry out the SSET Program were made available by the National Science Foundation Appropriation Act for Fiscal Year 1980 (Pub. L. 96-103).

Section 2. Purpose. The intent of the SSET Program is to enable the gubernatorial and legislative leadership of the States to strengthen their capacity to access and utilize scientific, engineering, and technical resources in their formulation and management of public policy and in their resolution of critical issues in subject areas with significant scientific or technical components.

Section 3. Definitions. 3.1 Applicant Organization. The state agency, office, unit or other state organization designated by the Governor or by the state legislative leadership to apply for an implementation grant under the SSET Program and authorized to act as a grantee under a NSF award. The Applicant Organization shall be that state agency, office, unit, or other organization principally concerned with the central policy management process of the branch.

3.2 Branch. The executive or legislative branch only of a state government.

3.3 Legislative Leadership. The elected leader of each of the two houses of the legislature of a state acting together; or if unicameral, of the single house.

3.4 State. Any of the several States and territories of the United States. As used herein, the term State may imply either branch of a state government or both according to the context.

Section 4. Program duration and funding. 4.1 The maximum duration of support for any award is intended to be three years.

4.2 In exceptional circumstances, States may be eligible for special supplemental transition funds to carry forward a project from the expiration of the implementation budget to the start of the next state fiscal year; this situation shall require a separate application in the last year of the project.

4.3 The Foundation may provide fiscal support to multi-year projects on an annual incremental basis. In addition, the Foundation may reduce maximum funding for the entire project period, due to the non-availability of funds.

4.4 An award shall be provided to a State on a two-thirds Federal, one-third state basis in support of the total effort over the life of the project.

4.5 The required state matching funds may be in the form of cash, or equivalent services and support, or a combination of the two.

4.6 Foundation support is not intended to substitute for existing levels of state activity, although such levels of effort may be used for the required match if appropriate.

Section 5. Designation of applicant organization. 5.1 One application per branch per State may be submitted.

5.2 In the executive branch, the Governor shall designate the applicant organization.

5.3 In the legislative branch, the Legislative leadership of both houses collectively shall designate the applicant organization (except for a unicameral legislature wherein the leadership of the single house shall so designate).

Section 6. Guidelines for applications. The proposal must contain the following elements.

6.1 Abstract. A concise abstract of about 200-250 words shall be provided clearly summarizing the background material (6.3) and the proposed work program activities (6.4).

6.2 Project Objective. A concisely stated project objective shall be provided that is specific to the branch of the State making the application and that is consistent with and builds upon the plan and program appended to the application (6.13).

6.3 Background Material. A description shall be provided for that branch of State government of the existing policy management process and the access to, and use of, scientific, engineering, and technical resources. Both text and diagrammatic material may be utilized as appropriate.

6.4 Work Program Activities. A description of the work program activities to be undertaken under the grant shall be provided that is consistent with and builds upon the SSET plan and program of the State (6.13).

6.5 Central Policy Management Process. The relationship of the proposed SSET process and/or mechanism to the central policy management process of the branch shall be demonstrated.

6.6 Capacity Strengthening Focus. The relationship between the work program activities being implemented and the SSET objective of strengthening the policy management capacity of State government shall be demonstrated.

6.7 Institutionalization Strategy. The strategy shall be provided for institutionalizing, without Foundation-support, the process and/or mechanism being undertaken, assuming that it warrants continuation after the Foundation-supported period.

6.8 Applicant Organization. The roles and responsibilities of the applicant organization shall be described briefly and an organization chart indicating its relationship to the Governor or Legislative leadership shall be provided.

6.9 Performing Personnel. Qualifications shall be provided of the proposed project director, project manager (if different), and senior policy and professional SSET Program staff.

6.10 Budget. A detailed budget for each year or period of support and an aggregate budget for the total project shall be provided showing costs for personnel, other direct costs, and indirect costs as well as items to be supported with Federal grant funds and with State contributions.

6.11 Designation of Applicant Organization. A letter designating the applicant organization shall be provided from the Governor or Legislative leadership. One letter may suffice for this purpose and for the endorsement required under Section 6.12 following.

6.12 Endorsement. A letter of endorsement of the application shall be provided from the Governor or Legislative leadership.

6.13 Appendix. The plan and program developed during the SSET Program study phase shall be submitted as an Appendix to the application. This plan and program shall describe the process and/or mechanism by which the work program activities (6.4) are to be undertaken. The guidelines for that plan and program are provided in the Program Announcement for the study phase (NSF 77-38: *The State Science, Engineering, and Technology Program*). The plan may be revised prior to its submission as an Appendix to the application; however, those revisions shall be consistent with the objectives of the SSET Program as specified in Program Announcement 77-38. Any applicant organization which did not participate in that study phase may submit a new plan which is consistent with SSET Program objectives.

Section 7. *Format requirements and application dates.* The National Science Foundation shall develop and promulgate the format for submission requirements (such as forms and number of copies) as well as the earliest and latest dates, if any, for receipt of applications. In any event, however, at least thirty calendar days shall be provided between the promulgation of format requirements pursuant to the guidelines and the first closing date for applications.

Section 8. Programmatic requirements. In addition to the formatting requirements pursuant to Sections 6 and 7 above, all of the following programmatic requirements must be met before an application will be considered for an award under the SSET Program.

8.1 The process and/or mechanism being implemented must be directed to strengthening the policy management capacity of the branch and not to conducting applied research projects.

8.2 The process and/or mechanism being implemented must have the capacity to address an array of issues or problems having significant scientific, engineering, or technical components.

8.3 Work program activities must be based on the SSET plan and program (6.13).

8.4 Work program activities must be undertaken within a process and/or mechanism that has a demonstrable relationship to the central policy management process of the branch.

8.5 Work program activities will be expected to result in the institutionalization of the activities at the end of the Foundation-funded period.

8.6 Applicant organization must be primarily concerned with the central policy management process of the branch.

Section 9. Criteria for evaluation. 9.1 All applications meeting the requirements pursuant to Sections 6, 7, and 8 above shall be subject to internal review by Foundation staff and to external review by individuals including those knowledgable regarding the SSET Program and the central policy management processes of the executive or legislative branch as appropriate. In this review and evaluation process, the criteria in both Sections 9.2 and 9.3 following shall be met.

9.2 In accordance with Foundation guidelines, reviewers will comment on and evaluate each of the elements of the application:

9.21 Significance of the project objective;

9.22 Appropriateness of the work program activities;

9.23 Appropriateness of the organization and management plans;

9.24 Competence of the project team; and

9.25 Adequacy of the budget.

9.3 In addition, reviewers will comment on and evaluate the extent to which the application demonstrates conformance with the objectives of the SSET Program:

9.31 Relationship to the central policy management process;

9.32 Capacity strengthening; and

9.33 Potential for institutionalization.

9.4 Rectification of Deficiencies. Revisions in applications resulting in substantial changes in program content shall not be accepted during the review process. However, the rectification of deficiencies is permissible but only to the extent that, at the request of the Foundation, unmet format and other administrative requirements are met or programmatic issues are clarified.

9.5 Resubmission. Applicant organizations whose submissions have not been selected for an award will upon request be advised of the reasons for the decision of the Foundation and provided with reviewers' comments, excluding the identity of the reviewers. In addition, such applicant organizations may resubmit a revised application at a later time if another round of applications is approved.

Section 10. Selection for award. 10.1 The Foundation may, subject to availability of funds, make awards to those applicant organizations which meet the requirements of Sections 6, 7, and 8 above and which are deemed eligible for support after peer review pursuant to Section 9.

10.2 In any fiscal year States shall compete for support within selected categories so that, in the aggregate, diversity is achieved across such categories for a series of characteristics deemed by the Foundation to be necessary to achieve the objectives of the Program. These characteristics shall

include but not be limited to the following:

10.21 Type of branch—executive, legislative;

10.22 Experience with the Intergovernmental Program or with similar state-supported program—lack of prior experience, prior experience;

10.23 Regional distribution—four Council of State Governments regions;

10.24 Character of state—metropolitan; nonmetropolitan; and

10.25 Population size of state—small, medium, large.

Section 11. Award information. 11.1 Notification of award will be in the form of an award letter.

11.2 The award instrument will be a grant to the applicant organization.

11.3 No costs, reimbursable under the award or allowable as the required match, may be incurred prior to the effective date of the project as stated in the award letter.

11.4 Awards shall be administered in general accordance with the policies and procedures contained in the NSF Grants Policy Manual (NSF 77-47) and in the NSF Grant General Conditions (FL 118).

William H. Wetmore,

Acting Director, Intergovernmental Program.

[FR Doc. 79-39742 Filed 12-28-79; 8:45 am]

BILLING CODE 7555-01-M

NATIONAL TRANSPORTATION POLICY STUDY COMMISSION

Privacy Act of 1974; Revocation and Transfer of System of Records

Pursuant to the provision of the Privacy Act of 1974, Public Law 93-579, 5 U.S.C. 552a, the National Transportation Policy Study Commission published in the Federal Register (41 FR 45158) notices of the existence of the following systems of records subject to the Privacy Act: NTPSC-1, Payroll Records-NTPSC; NTPSC-2, General Financial Records-NTPSC; and NTPSC-3, General Personnel Files-NTPSC. The Commission will terminate operations on December 29, 1979, and the above systems of records are revoked as of that date.

Following is a summary of the disposition of the Commission's systems of records, subsequent to the termination date:

NTPSC-1

System Name:

Payroll Records-NTPSC: To be retained by the General Services Administration, National Payroll Center, for use in concluding administrative operations of the National Transportation Policy Study Commission as part of the GSA system of records, Defunct Agency Records, GSA/OAD-36.

NTPSC-2

System Name:

General Financial Records-NTPSC: To be retained by the General Services Administration, External Services Branch, for use in concluding administrative operations of the National Transportation Policy Study Commission as part of the GSA system of records, Defunct Agency Records, GSA/OAD-36.

NTPSC-3

System Name:

General Personnel Files-NTPSC: To be destroyed.

John E. Wild,

Executive Director.

[FR Doc. 79-39834 Filed 12-28-79; 8:45 am]

BILLING CODE 6820-36-M

OFFICE OF MANAGEMENT AND BUDGET

Improving Government Regulations; OMB Directives Covered by Executive Order 12044; Semi-annual Agenda of Upcoming Action

AGENCY: Office of Management and Budget.

ACTION: Publication of semi-annual agenda of regulations.

SUMMARY: The Office of Management and Budget is publishing the semi-annual agenda of upcoming action on OMB directives covered by Executive Order 12044, Improving Government Regulations. This action is in accordance with OMB's internal guidelines for implementing Executive Order 12044, as published in the Federal Register on June 15, 1979.

FOR FURTHER INFORMATION CONTACT: See agency contact person listed for entry in the agenda, c/o Office of Management and Budget, 726 Jackson Place, N.W., Washington, D.C. 20503. On background section, contact David Leuthold, at the above address.

Background

OMB Circulars are directives that communicate significant government-wide policy of a continuing nature. A circular falling within the requirements of Executive Order 12044 is one that is likely to affect:

(1) The existing procedures by which State or local governments contribute to or participate in the development of Federal policy;

(2) The nature and scope of information collected by Federal agencies from non-Federal respondents;

(3) The nature and scope of information provided by agencies of the Federal Government under the Privacy Act;

(4) The standards by which agencies establish requirements associated with grants, contracts, or other forms of financial assistance.

Those circulars that outline procedures to be followed by departments and agencies for the President's budget and legislative programs are not covered by the provisions of Executive Order 12044. In addition, OMB directives on procurement are not covered.

Summary of action under Executive Order 12044.

A preliminary review of OMB Circulars indicates that twenty-five are subject to Executive Order 12044 guidelines. These include:

A-21, Cost principles for educational institutions
A-25, User Charges
A-63, Advisory Committee Management
A-73, Audit of Federal Operations and Programs
A-76, Policies for acquiring commercial or industrial products and services for Government use
A-84, Reporting of Federal outlays by geographic region
A-89, Catalogue of Federal Domestic Assistance
A-90, Cooperating with State and local governments to coordinate and improve information systems
A-94, Discount rates to be used in time-distributed costs and benefits
A-95, Evaluation, review, and coordination of Federal and federally assisted programs and projects
A-97, Rules and regulations permitting Federal agencies to provide specialized or technical services to State and local units of government under Title III of the Intergovernmental Cooperation Act of 1968
A-102, Uniform administrative requirements for grants-in-aid to State and local governments.
A-104, Comparative cost analysis for decisions to lease or purchase general purpose real property
A-106, Reporting Requirements in Connection with the Prevention, Control, and Abatement of Environmental Pollution at Existing Federal Facilities.
A-108, Responsibilities for the maintenance of records about individuals by Federal agencies
A-109, Major Systems Acquisitions
A-110, Uniform administrative requirements for grants and other agreements with institutions of higher education, hospitals, and other nonprofit organizations

A-111, Jointly funded assistance to State and local governments and nonprofit organizations
A-116, Agency Preparation of Urban Community Impact Analysis
FMC 73-3, Cost Sharing on Federal Research*
FMC 73-6, Coordinating indirect cost rates and audit at educational institutions
FMC 73-7, Administration of college and university research grants
FMC 74-3, Governmentwide procedures for processing preaward protests against contract award
FMC 74-4, Cost principles applicable to grants and contracts with State and local governments
FMC 75-1, Ensuring consideration of users' experience with Federal agency supply support systems

In February 1979, when publishing OMB's proposed implementing guidelines on Executive Order 12044, we mentioned that our review of existing requirements was to begin with reviews of seven of the above circulars: A-40, A-106, A-108, A-110, FMC 73-8 and FMC 74-4.

Of these seven circulars, five (A-40, A-106, A-108, A-110, and FMC 74-4) are currently under revision. Circulars A-102 and FMC 73-8 have had final revisions published (FMC 73-8 was reissued as Circular A-21). In addition, A-73 and FMC 73-6 have had revisions completed.

Of the twenty-five covered circulars then, reviews on nine are underway and/or completed. During the next six months reviews will be initiated on five more circulars, including A-25, A-63, A-89, A-94, and A-95.

This will bring to fourteen the number of circulars reviewed under the Executive Order. Reviews of the remaining eleven circulars will be completed by the end of calendar year 1980. Thus, our total sunset review of these directives will have been accomplished in less than two years.

Other actions on OMB Circulars. The above reviews are being accomplished as part of a comprehensive review of all OMB directives. New internal guidelines for publishing OMB directives have been drafted and are scheduled to be issued within the next 60 days. These guidelines will include specific procedures for justifying proposed new directives.

James T. McIntyre, Jr.,
Director.

*Circulars designated by "FMC" are those for which responsibility was transferred from GSA to OMB by Executive Order 11893, dated December 31, 1975.

Directive under development	Opportunity for public participation	Completion date	Reasons for review and major issues
Revision of Circular No. A-108, "Responsibilities for the maintenance of records about individuals by Federal agencies".	1. Comments on issues may be submitted at any time. 2. Proposed revisions will be published in the FEDERAL REGISTER and circulated to interested parties for comment.	Proposed revisions by January 1980	Circular No. A-108 was issued pursuant to the Privacy Act of 1974, for which OMB has oversight responsibility. This review is part of the Presidential Privacy Initiative, undertaken in response to the recommendations of the Privacy Protective Study Commission. Specific issues to be reviewed are: 1. Extension of the applicable provisions of the Act to certain recipients of discretionary Federal grants. 2. Strengthening the administration of the routine use provision of the Privacy Act. 3. Assignment of Privacy Act oversight and development of new information systems to one office in each department and agency. 4. Establishment of guidelines on the responsibility, training and appointment of the system managers required by the Act. 5. Adoption of mechanisms to improve oversight of the privacy implications of new Federal information systems at an early stage in the planning process; and 6. Promulgation of baseline standards for Federal regulations which require private sector recordkeepers to report personal information about their clients, customers, or employees to the government. It should be noted that OMB carries out its Privacy Act oversight through guidelines as well as Circular A-108. The issues listed above may be addressed in guidelines rather than Circular A-108. Public comment will be sought on any revision or additions to the guidelines. *Contact Person:* Leslie Greenspan, Information Systems Policy, 395-3785.
Revision of Circular A-106, "Reporting Requirements in Connection with Federal Compliance with Population Control Standards." This circular sets forth the procedures to be followed by Federal agencies in carrying out the provision of Sections 1-4 and 1-5 of Executive Order No. 12088 pertaining to the control of pollution from Federal facilities.	1. Comments may be received at any time.	March 1980, rather than September 1979, as previously reported.	Circular A-106 is being reviewed to clarify the procedures that must be followed by Federal agencies in controlling pollution at Federal facilities pursuant to Executive Order 12088. 1. Are the requirements for agency information on pollution control clear? 2. Does the schedule for agency reporting allow sufficient time for project review? 3. Does the schedule for reporting ensure that all projects that are needed will be included? 4. Are the information requirements for EPA's evaluation of agency proposals clear and adequate? *Contact Person:* Kathleen O'Halloran, Natural Resources, 395-6327.
Revision of Procurement Standards attachment to OMB Circular No. a-102, "Uniform Administrative Requirements for Grants-in-Aid to State and local Governments".	1. Public meeting held on January 16, 1979. 2. Published for comment in the FEDERAL REGISTER on December 6, 1978.	Published in FEDERAL REGISTER in final August 15, 1979.	1. Attachment revised to reduce administrative cost, paperwork, and other factors which contribute to inefficiency and delay in implementing programs. 2. *Major Issues*— ● Rescinds nonconforming provisions of current agency subordinate regulations. ● Creates a grantee procurement review certification program to reduce Federal agency review of individual procurement. *Contact Person:* Jack Nadel, Office of Federal Procurement Policy, 395-6165.

Directive under development	Opportunity for public participation	Completion date	Reason for issuance and major issues
Circular requiring States to prepare a substate distribution of population projections.	1. Proposed circular to be published in the FEDERAL REGISTER in December 1979. 2. Federal agencies State and local governments and the public will be given 90 days for comment. 3. A number of public hearings on this circular will be scheduled. Dates and places for these hearings will be published in the FEDERAL REGISTER.	Circular should be issued July 1980	OMB and the Department of Commerce are undertaking an effort to develop a standardized series of Federal, State, and substate population projections for use by Federal agencies in funding capital facilities. This effort is expected to greatly reduce the often conflicting and duplicative projections now prepared by State and local governments, and to avoid the expenditure of Federal funds for facility capacities that will never be utilized. *Major Issues:* The following issues have been referenced in the proposed circular: (1) Should the Federal Government finance the costs of preparing the substate projection? (2) Should the Federal Government establish an appeals process in the event of disputes between States and substate governments? (3) What sanction should the Federal Government apply if substate projections are not prepared? *Contact person:* Walter Groszyk, Intergovernmental Affairs Division, 395-3157.
Regulation designed to improve the management reporting and recordkeeping the Federal government imposes on the public, to replace OMB Circular A-40, "Management of Federal Reporting Requirements".	1. Proposed rules to be published in the FEDERAL REGISTER in December 1979. 2. Federal agencies and the public will be given 60 days for comment.	Final rules should be issued in March 1980.	Issuance of a new Executive Order on "Paperwork" and a need to clarify and update related OMB issuances have resulted in the development of consolidated OMB requirements. These are designed to increase effectiveness of the government's paperwork control program and implementation of the Federal Reports Act of 1942. *Major Issues:* (1) Are new policies and procedures adequate to ensure effectiveness of the paperwork control program? (2) Are public participation provisions adequate? (3) Is the development of a single set of OMB rules to control paperwork a sound idea? (4) Should guidelines of President's reporting burden reduction program or significant portions of them be incorporated into the circular? (5) Should circular be limited in subject matter to public reporting? (6) Are all items defined? Are definitions clear? *Contact Person:* Stanley Morris, Regulatory Policy and Reports Management, 395-5867.
Circular or Executive Order standardizing citizen participation requirements applied to State and local governments by Federal agencies.	1. Summary of issues being examined by an interagency task force in this area, with an invitation for interested citizens to partcipate in the review and decision effort by the task force. To be published in the FEDERAL REGISTER, January 1980. 2. Public meetings at locations and dates to be announced in the FEDERAL REGISTER. To be held prior to the completion of draft recommendations. 3. Publication of draft recommendations of the task force in the FEDERAL REGISTER with a 90-day period for public comment.. 4. Public hearings at locations and dates to be announced in the FEDERAL REGISTER on the draft recommendations. 5. Representatives of Federal agencies and Federal Regional Councils would be available to identify and transmit the views of citizens with a particular program or geographic interest. 6. Citizens wishing to participate can be placed on a mailing list to receive information without having to rely on the FEDERAL REGISTER.	September 1980	Studies have indicated that existing citizen participation requirements are often ineffective. In some instances, requirements should exist but do not. This effort is expected to review the present set of requirements and develop recommendations on how a more uniform, effective system of requirements could be established. *Major Issues:* Two alternative proposals are likely to be reviewed. The first would substitute standards of performance for the present set of requirements. A citizen participation progam would be developed on a case-by-case (project-by-project/locality-by-locality) basis as a result of negotiations between the Federal funding agency and the State and local government. Most of the existing non-statutory requirements would be eliminated. The second alternative would establish a core set of requirements applicable nationally to all Federal agencies. It would likely increase and elaborate on the existing set of requirements specified by many Federal programs. *Contact person:* Walter Groszyk, Intergovernmental Affairs Division, 395-3157.

Directive under development	Opportunity for public participation	Completion date	Reason for review and major issues
Revision of payments procedures under OMB Circular No. A-102, "Uniform administrative requirements for grants in aid to State and local governments".	Proposed revision was published for comment in the FEDERAL REGISTER, October 1978.	Issued October 1979	1. Proposed revision brings the circular into line with Treasury requirements. 2. *Major Issue:* ● Whether to reimburse recipients only for amounts which have been actually been paid to contractors. *Contact person:* John J.Lordan, Financial Management Branch/BRD, 395-6823.

Directive under development	Opportunity for public participation	Completion date	Reason for review and major issues
Revision of audit requirements under OMB Circular No. A-102, "Uniform administrative requirements for grant-in-aid to State and local governments".	1. Proposed revision published for comment in the FEDERAL REGISTER, July 1979.	Issued October 1979	1. Continuation of the long-term goal of grant standardization and placing greater reliance on State and local governments. 2. *Major issues:* ● One guide would replace almost one hundred now in use. ● Emphasis on total audit of an organization rather than grant-by-grant audits. *Contact person:* John J. Lordan, Financial Management Branch/DRD, 395-6823.
Revision of Procurement Standards attachment to OMB Circular No. A-102. "Uniform administrative requirements for Grants-in-aid to State and local governments".	1. Published for comment in the FEDERAL REGISTER, December 1978.	Issued August 1979	1. Attachment revised to reduce administrative cost, paperwork, and other factors which contribute to inefficiency and delay in implementing programs. 2. *Major issues:* ● Rescinds nonconforming provisions of current agency subordinate regulations. ● Creates a grantee procurement review certification program to reduce Federal agency review of individual procurement. *Contact person:* Jack Nadol, Office of Federal Procurement Policy, 395-8166.
Revision of Federal Management Circular No. 74-4, "Cost principles applicable to grants and contracts with State and local governments".	1. Proposed revision concerning expenses of officials has been circulated for comment to all the major public interest groups. 2. Extensive discussions on the interest issue have taken place with State and local officials and representatives of public interest groups. 3. Proposed revision was published for comment in the FEDERAL REGISTER, June 1979. Publication of the interest issue is dependent upon comments received from Federal agencies.	January 1980 rather than October 1979, as previously reported.	The circular is being revised at the request of State, local and Federal officials. *Major issues:* 1. Whether to recognize travel cost of local legislators and chief executives as an expense when their work directly benefits grant programs. 2. Whether to recognize interest incurred in borrowing to construct building site as a reimbursable cost *Contact person:* John J. Lordan, Financial Management Branch/BRD, 395-6823.
Revision of OMB Circular No. A-102 and A-110 to include a set of standard legal assurances for grants to State and local governments, universities, hospitals, and other nonprofit organizations.	Publication for comment in the FEDERAL REGISTER expected in Jan. 1980, rather than July 1979, as previously reported.	March 1980, rather than October 1979, as previously reported.	1. Update of assurances in OMB Circular No. A-102 is needed because of the changes that have taken place in Executive Orders and Acts of Congress. Inclusion of standard assurances in OMB Circular No. A-110 will further the goal of standardization and simplification for grantees. 2. *Major issues:* ● Standardization of assurance language, assurance formats and forms. *Contact person:* John J. Lordan, Financial Management Branch/BRD, 395-6823.
A new OMB circular covering "Principles for determining costs of grants and contracts with certain nonprofit organizations".	1. Proposed circular was published for comment in the FEDERAL REGISTER, April 1977. 2. Recirculated to Federal agencies and interested parties in April 1978.	January 1980 rather than July 1979, as previously reported.	1. Proposed Circular was developed to assist nonprofit agencies by providing single set of cost principles as part of Federal effort to standardize and simplify grant procedures. 2. *Major issues:* ● Methods of allocating indirect costs. ● Uniform set of allowable costs. *Contact person:* John J. Lordan, Financial Management Branch/BRD, 395-6823.
Revision of closeout requirements in Circulars A-102 and A-110.	Publication for comment in the FEDERAL REGISTER expected in January 1980, rather than July 1979, as previously reported.	May 1980 rather than October 1979, as previously reported.	1. Closeout attachment being revised as the result of reports that substantial amounts of funds advanced to grantees but not spent for program purposes are being held by grantees. *Major issues:* ● Prompt refund of unspent cash advances. ● Greater specificity of closeout requirements. *Contact person:* John J. Lordan, Financial Management Branch/BRD, 395-6823.
Revision of property requirements in Circular A-110 "Uniform requirements for grants and agreements for grants and agreements with universities, hospitals, and other nonprofit organizations".	Publication for comment in the FEDERAL REGISTER expected in January 1980, rather than September 1979, as previously reported.	March 1980 rather than December 1979, as previously reported.	Property management attachment is being revised to make it consistent with Circular A-21 and to further the goal of simplification of grant requirements and reduced paperwork. *Contact person:* John J. Lordan, Financial Management Branch/BRD, 395-6823.
Revision of Circular A-73, "Audit of Federal Operations and Programs".	Proposed revision was published in the FEDERAL REGISTER for comment July 1979.	Issued November 1979	Circular A-73 revised to expand the section dealing with audit followup. Specific criteria provided to Federal agencies to assure the timely and proper resolution of audit findings and any attendant collection actions. *Contact person:* John J. Lordan, Financial Management Branch/BRD, 395-6823.
Revision of Circular 73-6, "Coordinating indirect cost rates and audits at educational institutions".	Proposed revision was published in the FEDERAL REGISTER for comment, July 1979.	Issued November 1979	1. Circular reissued under its original designation of OMB Circular A-88. 2. Revision is based in part on agency task force chaired by the Dept. of Health, Education and Welfare. 3. Revision continues the existing policy of relying on a single agency to act for all agencies in auditing education institutions and in negotiating their indirect cost rates. It adds to those duties the responsibility to follow-up on audits by:

Directive under development	Opportunity for public participation	Completion date	Reason for review and major issues
			● Assuring correction of systems deficiencies, and Negotiating appropriate monetary recoveries. *Contact person:* John J. Lordan, Financial Management Branch/BRD, 395-6823.
Revision of Circular A-21, "Cost principles for educational institutions".	Study by interagency task force and affected groups. Further public involvement will depend on results of the study.	July 1980	1. Review is being done at the urging of university representatives as a result of comments received during the last revision of A-21. 2. *Major issue:* ● Recognition of independent research and development as an allowable cost. *Contact person:* John J. Lordan, Financial Management Branch/BRD, 395-6823.

[FR Doc. 79-39795 Filed 12-28-79; 8:45 am]
BILLING CODE 3110-01-M

Agency Forms Under Review

Background

When executive departments and agencies propose public use forms, reporting, or recordkeeping requirements, the Office of Management and Budget (OMB) reviews and acts on those requirements under the Federal Reports Act (44 U.S.C., Chapter 35). Departments and agencies use a number of techniques including public hearings to consult with the public on significant reporting requirements before seeking OMB approval. OMB in carrying out its responsibility under the Act also considers comments on the forms and recordkeeping requirements that will affect the public.

List of Forms Under Review

Every Monday and Thursday OMB publishes a list of the agency forms received for review since the last list was published. The list has all the entries for one agency together and grouped into new forms, revisions, extensions,or reinstatements. Some forms listed as revisions may only have a change in the number of respondents or a reestimate of the time needed to fill them out rather than any change to the content of the form. The agency clearance officer can tell you the nature of any particular revision you are interested in. Each entry contains the following information:

The name and telephone number of the agency clearance officer (from whom a copy of the form and supporting documents is available);
The office of the agency issuing this form;
The title of the form;
The agency form number, if applicable;
How often the form must be filled out;
Who will be required or asked to report;
An estimate of the number of forms that will be filled out;
An estimate of the total number of hours needed to fill out the form; and
The name and telephone number of the person or office responsible for OMB review.

Reporting or recordkeeping requirements that appear to raise no significant issues are approved promptly. Our usual practice is not to take any action on proposed reporting requirements until at least ten working days after notice in the Federal Register but occasionally the public interest requires more rapid action.

Comments and Questions

Copies of the proposed forms and supporting documents may be obtained from the agency clearance officer whose name and telephone number appear under the agency name. The agency clearance officer will send you a copy of the proposed form, the request for clearance (SF83), supporting statement, instructions, transmittal letters, and other documents that are submitted to OMB for review. If you experience difficulty in obtaining the information you need in reasonable time, please advise the OMB reviewer to whom the report is assigned. Comments and questions about the items on this list should be directed to the OMB reviewer or office listed at the end of each entry.

If you anticipate commenting on a form but find that time to prepare will prevent you from submitting comments promptly, you should advise the reviewer of your intent as early as possible.

The timing and format of this notice have been changed to make the publication of the notice predictable and to give a clearer explanation of this process to the public. If you have comments and suggestions for further improvements to this notice, please send them to Stanley E. Morris, Deputy Associate Director for Regulatory Policy and Reports Management, Office of Management and Budget, 726 Jackson Place, Northwest, Washington, D.C. 20503.

DEPARTMENT OF AGRICULTURE

Agency Clearance Officer—Richard J. Schrimper—447-6201

New Forms

Economics, Statistics, and Cooperatives Service
Farm Coop—Young farm couples and rural youth program
Single time Participants in Farm Coop programs; 473 responses, 236 hours
Office of Federal Statistical Policy and Standard, 673-7974

Revisions

Agricultural Marketing Service
Tobacco stocks report
TB-26
Quarterly
Tobacco dealers and manufacturers; 800 responses, 800 hours
Office of Federal Statistical Policy and Standard, 673-7974
Rural Electrification Administration
Uniform system of accounts prescribed for electric borrowers of REA
REA 181-1
On occasion
REA electric borrowers
Charles A. Ellett, 395-5080

DEPARTMENT OF COMMERCE

Agency Clearance Officer—Edward Michals—377-3627

New Forms

Bureau of the Census
1980 Decennial Census KAP/Exposure study
(KAP survey; exposure survey)
D-897 (KAP) D-898 (Exp.)
Single time
Households in mail-out, mail-back census areas; 13,550 responses, 4,517 hours
Office of Federal Statistical Policy and Standard, 673-7974

DEPARTMENT OF ENERGY

Agency Clearance Officer—John Gross—633-8558

New Forms

Report forms for enhanced oil recovery incentives program
ERA-424A, B, and C
On occasion

Producers using specified ECR techniques; 3,700 responses, 3,400 hours
Jefferson B. Hill, 395-5867

DEPARTMENT OF HEALTH, EDUCATION, AND WELFARE

Agency Clearance Officer—William Riley—245-7488

New Forms

Center for Disease Control
CDC Institutional Anonymity Survey
Single time
Hospital Administrators, 210 responses, 53 hours
Richard Eisinger, 395-3214

Public Health Service
Longitudinal Health Survey
Other (see SF-83)
Persons age 12+ in household with telephone, 17,886 responses, 2,969 hours
Office of Federal Statistical Policy & Standard, 673-7974

Office of the Secretary
Evaluation of HEW Programs: Services to victims of domestic violence: (A) State survey, (B) Community survey
OS-24-79
Single time
HEW program administrators and providers (S&L) 2,641 responses, 331 hours
Laverne V. Collins, 395-3214

Public Health Service
Report on Federal Obligations for Medical and Health Related R&D
NIH-1815-1
Other (see SF-83)
Various scientific research and analytical services 16 responses, 1,568 hours
Richard Eisinger, 395-3214

Public Health Service
Evaluation of Workshops—Office of Adolescent Pregnancy Program
On occasion
Workshop participants 500 responses, 125 hours
Richard Eisinger, 395-3214

Revisions

Social Security Administration
Application for Retirement Insurance Benefits
SS-1-F6
On occasion
Application for retirement insurance benefits under the Social Security Act 1,560,000 responses, 260,000 hours
Barbara F. Young, 395-6132

Social Security Administration
Application for Widow's or Widower's Insurance Benefits
SSA-10-F8
On occasion
Surviving widows/widowers age 60 or older (or over 50 if disabled), 661,000 responses, 165,250 hours
Barbara F. Young, 395-6132

Social Security Administration
Application for Surviving Child's Insurance Benefits
SSA-6-F6
On occasion
Children of deceased wage earners 815,000 responses, 203,750 hours
Barbara F. Young, 395-6132

Social Security Administration
Application to be selected as Payee
SSA-11-F6
On occasion
Per want to be substituted as a rep pay for minor or incompetant beneficiary 550,000 responses, 91,667 hours
Barbara F. Young, 395-6132

Alcohol, Drug Abuse and Mental Health Administration
Treatment Outcome Prospective Study (TOPS)
Intreatment phase
Other (see SF-83)
Clients in federally funded drug abuse treatment programs 2,400 responses, 16,000 hours
Richard Eisinger, 395-3214

Extensions

Public Health Service
Master Facility Inventory—Complement Survey
On occasion
Health facilities in area problem sample & not listed in MFI, 300 responses, 75 hours
Office of Federal Statistical Policy & Standard, 673-7974

Food and Drug Administration
Request for Supplemental Certification of a Batch of an Antibiotic Drug
FD 1679
On occasion
Antibiotic manufactures, 150 responses, 75 hours
Richard Eisinger, 395-3214

DEPARTMENT OF HOUSING AND URBAN DEVELOPMENT

Agency Clearance Officer—Robert G. Masarsky—755-5184

New Forms

Equal Opportunity
Recipient Employment
Annually
All units of general local government receiving CDBG funds 1,560 responses, 11,700 hours
Arnold Strasser, 395-5080

Policy Development and Research
Survey for Evaluation of Urban Counties in CDBG
Single time
Key individuals in 10 CDBG designated urban Counties, 85 responses, 170 hours
Arnold Strasser, 395-5080

DEPARTMENT OF THE INTERIOR

Agency Clearance Officer—William L. Carpenter—343-6716

Revisions

Bureau of Land Management
Exchange-of-use Grazing Agreement
4130-4
On occasion
Applicants for grazing use agreements, 1,200 responses, 600 hours
Charles A. Ellett, 395-5080

DEPARTMENT OF TRANSPORTATION

Agency Clearance Officer—Bruce H. Allen—426-1887

Reinstatements

Federal Railroad Administration
Locomotive Inspection and Repair Report
FRA F6180-49
Semi-Annually
Railroads, 64,000 responses, 144,000 hours
Jefferson B. Hill, 395-5867

DEPARTMENT OF THE TREASURY

Agency Clearance Officer—Floyd I. Sandlin—376-0436

Revisions

Bureau of Customs
Application for Withdrawal of Bonded Stores
For fishing vessel and certification of use
5125
On occasion
Vendors of fishing fleets, 8,700 responses, 609 hours
Marsha D. Traynham, 395-6140

EXECUTIVE OFFICE OF THE PRESIDENT, OTHER

Agency Clearance Office—Thomas Clark—395-4540

New Forms

Pesticide Applicator Questionnaires
Single time
Pesticide applicators, 1 response, 3,600 hours
Edward H. Clarke, 395-5867

UNITED STATES INTERNATIONAL TRADE COMMISSION

Agency Clearance Officer—Charles Ervin—523-0267

New Forms

Producers' Questionnaire for Investigation
303-TA-12 pig iron
Single time

Domestic producers of pig iron, 30 responses, 480 hours
Office of Federal Statisticals Policy & Standard, 673-7974
Purchasers' Questionnaire—Pig Iron
Single time
Purchasers of pig iron, 25 responses, 200 hours
Office of Federal Statistical Policy & Standard, 673-7974
Importers' Questionaire for Investigation 303-TA-12 pig iron
Single time
Importers of pig iron, 25 responses, 200 hours
Office of Federal Statistical Policy & Standard, 673-7974

Stanley E. Morris,
Deputy Associate Director for Regulatory Policy and Reports Management.

[FR Doc. 79-39814 Filed 12-28-79; 8:45 am]
BILLING CODE 3110-01-M

President's Commission for a National Agenda for the Eighties; Meetings

AGENCY: Office of Management and Budget.

ACTION: Notice of meeting.

SUMMARY: Pursuant to Pub. L. 92-463, notice is hereby given that the second meeting of the President's Commission for a National Agenda for the eighties is scheduled to be held from 9 a.m. to 6 p.m., January 11, 1980, in the 6th Floor Conference Room, Federal Home Loan Bank Building 17th and G Streets, Northwest, Washington, D.C.

The purpose of the meeting is to continue formulation of an agenda identifying issues for further study by the Commission.

Because of limited space, those interested in attending are asked to call the Commission's office beforehand. Available seats will be assigned on a first-come basis.

The meeting will be open to the public.

FOR FURTHER INFORMATION CONTACT: Mr. Dick Wegman or Mr. Claude Barfield, President's Commission for a National Agenda for the Eighties, 744 Jackson Place, NW, Washington, DC (202) 275-0616.

David R. Leuthold,
Budget and Management Officer.

[FR Doc. 79-39768 Filed 12-28-79; 8:45 am]
BILLING CODE 3110-01-M

DEPARTMENT OF STATE

Office of the Secretary

[Public Notice CM-8/255]

Oceans and International Environmental and Scientific Affairs Advisory Committee; Open Meeting

The General Panel of the Oceans and International Environment and Scientific Affairs Advisory Committee will meet at 10:00 am on Thursday, January 17, 1980 in Room 150, National Academy of Science, Washington, D.C.

At this meeting, officers responsible for scientific and environmental affairs in the Department of State and members of the Advisory Committee will discuss three broad issues: energy and development, the follow-up to the UN Conference on Science and Technology for Development, and, resource problems. This session will be open to the public. The public will be admitted to the session to the limits of seating capacity and may be given the opportunity to participate in discussions according to the instructions of the Chairperson.

Requests for further information on the meetings may be directed to Bruce L. R. Smith or Bronson Percival of the OES Policy Assessment Staff, Department of State. They may be reached by telephone on (202) 632-2764.

Thomas R. Pickering,
Chairman.

December 11, 1979.

[FR Doc. 79-39692 Filed 12-28-79; 8:45 am]
BILLING CODE 4710-09-M

TENNESSEE VALLEY AUTHORITY

Murphy Hill 500-kV Substation and Transmission Line Connections; Negative Determination (Finding of No Significant Impact)

In accordance with section 102(2)(C) of the National Environmental Policy Act of 1969 (NEPA), and Section V-B-1 of the Tennessee Valley Authority's Procedures for Environmental Planning and Assessment (39 FR 5671-75 (1974)) and consistent with Section 1501.4 of the Council on Environmental Quality Provisions for Implementing NEPA (43 FR 55,978-56,007 (1978)), the Tennesee Valley Authority (TVA) hereby gives notice that it has determined that the construction and operation of a 500-kV substation and transmission line connections (located approximately 11 miles northeast of Guntersville, Alabama), is not a major Federal action significantly affecting the quality of the human environment and an environmental statement is not necessary for this proposed action. TVA has prepared an environmental evaluation of the impacts related to this proposal and has identified measures to minimize the effects of construction and operation on the environment. The proposal is compatible with both regional and local planning and no significant adverse comments have been received from the public.

This project is required in order to maintain acceptable operating voltage levels and facilitate TVA's continuing efforts to strengthen the local power supply. The proposed transmission line routes will traverse several creeks and branches and their associated floodplains and could require the installation of transmission structures within areas subject to flooding. TVA, however, is of the opinion that neither the activities associated with constructing the transmission structures nor their presence will significantly impact the floodplains. TVA has also determined that there are no practical alternate transmission line routes which would avoid traversing one or more of these floodplains, and that the proposed action is consistent with policies on Floodplain Management.

TVA will assure in the construction of its facility that the floodplains will not be (1) irreparably damaged by construction activities; (2) altered significantly in volume and rate of flow; or (3) significantly reduced in flood storage capacity. Should transmission line structures be located in a floodplain, for each foot of flood elevation less than one cubic foot of flood capacity per tower will be displaced.

Preannounced public meetings on this project were held at Guntersville, Alabama, on September 27, 1979, and in the Wakefield Community Center near the Murphy Hill site on October 4, 1979. Information concerning the project was presented and TVA personnel answered questions from several of the approximately 133 people in attendance. No significant conflicts or environmental impacts related to this project were identified at the meetings or by any of the agencies contacted by TVA. Copies of the environmental evaluation are available to the public by calling TVA's toll free Citizen Action Line at 1-800-362-9250 (inside Tennessee), 1-800-251-9242 (outside Tennessee), and 632-4100 at Knoxville or by contacting TVA's Information Office, 400 Commerce Avenue, Knoxville, Tennessee 37902.

Any questions or comments concerning this proposal should be directed to: Dr. Mohamed T. El-Ashry, Director of Environmental Quality,

Tennessee Valley Authority, Forestry Building, Norris, Tennessee 37828.

No further action will be taken on this proposal for 30 days from the date of publication of this notice (January 30, 1980) pending receipt of public comment.

Dated: December 20, 1979.

Mohamed T. El-Ashry,

Director of Environmental Quality.

[FR Doc. 79-39744 Filed 12-28-79; 8:45 am]

BILLING CODE 8120-01-M

DEPARTMENT OF TRANSPORTATION

Federal Railroad Administration

[FRA General Docket No. H-75-4]

Locomotive Inspection Test Program; Second Supplemental Report and Order

The Federal Railroad Administration (FRA) previously granted a waiver of compliance to the Port Authority Trans Hudson Corporation (PATH) to permit the initiation of a limited test program concerning the utilization of different inspection requirements for certain types of electrically powered multiple unit passenger cars. The report and order granting this waiver and describing the test program was published in the Federal Register on April 21, 1976 (41 FR 16680).

In granting this waiver the Railroad Safety Board (Board) of the FRA, which has been delegated the authority to determine whether granting such a waiver is appropriate, established terms and conditions under which that test program was to be conducted. The terms and conditions established by the Board basically provided for a thirty-six (36) month test effort. The test was divided into three phases which allowed PATH to make gradual incremental increases in the time interval required for the performance of the inspection activity required by 49 CFR § 230.451(a).

The test program entered its third and final phase on August 1, 1978. During this phase the interval for conducting the required inspections has been increased to 60 days. The Board subsequently acted to extend the duration of the test program for an additional six month period in order to obtain additional information. The supplemental report and order increasing the duration of the test program to a period of forty-two (42) months was published in the Federal Register on November 30, 1978 (43 FR 56122). Under the terms of that supplemental report and order the test program is scheduled to terminate on December 31, 1979.

The data obtained from this test clearly indicates that the 60 day inspection interval has not reduced the operational safety of this equipment. In fact the available data suggests that even greater intervals between inspections could be permitted without diminishing the safety performance of this equipment. Based on this data the Board has been considering a further extension of this test effort. Additionally, there are contemplated regulatory changes that make an extension of the test effort appropriate.

The proposed regulatory change is based on FRA's response to Executive Order 12044 which prompted a general review of FRA's existing safety regulations. That review included a series of safety inquiry hearings, commencing on June 14 and 15, 1978, which specifically addressed the existing locomotive inspection rules. The details of this review effort were announced in the Federal Register on May 8, 1978 (43 FR 19696).

Based on those hearings and other available data FRA proposed to totally revise the existing rules for locomotive inspections (49 CFR Part 230). The details of the proposed revisions were published in the Federal Register on May 21, 1979 (44 FR 29604). The proposed revisions contained a deletion of the current thirty (30) day inspection interval and substitution of a quarterly inspection provision. The proposed rules have been the subject of both oral and written comment. Although these comments are extensive, FRA anticipates that a final rule will be adopted in the near future.

In the event that the proposed concept of quarterly inspections is adopted, when FRA issues the final rule concerning locomotives, a continuation of the PATH test program would be of only minimal value to the Board. Additionally, under such circumstances continuation of the test program would be economically detrimental to PATH since, in the absence of the test effort, PATH would be able to select an interval of up to ninety days for the performance of the required inspection. Conversely, if the proposed concept of quarterly inspections is not adopted and FRA issues a final rule with a 30 day or 60 day inspection interval, a continuation of the test program would be of value to both the Board and PATH.

Consequently, the Board believes that the proposed revision has a direct bearing on this proceeding and that the adoption of the final rule should occur before further significant action is taken in this proceeding. Although adoption of a final rule is necessary for the long term resolution of this test effort, there is a need for the Board to take action in this matter in order to preserve the present method of inspections.

As noted the Board in its' initial supplemental report and order extended the duration of the test period to December 31, 1979. It is not clear that the issuance of the revised regulations will occur by that date. Furthermore, it is not clear what the impact of that final rule will be for this test program's continuation. The Board, therefore, has decided to further extend the existing test program for a period of an additional six (6) months (until June 30, 1980).

Authority: Sec. 202 of the Federal Railroad Safety Act of 1970, as amended (45 U.S.C. 431); Sec. 1.49(n), Regulations of the Office of the Secretary of Transportation (49 CFR 1.49(n)).

Issued in Washington, D.C. on December 19, 1979.

Joseph W. Walsh,

Chairman, Railroad Safety Board.

[FR Doc. 79-39634 Filed 12-28-79; 8:45 am]

BILLING CODE 4910-06-M

Federal Highway Administration

Environmental Impact and Related Procedures

AGENCY: Federal Highway Administration (FHWA), DOT.

ACTION: Notice.

SUMMARY: This notice publishes interim instructions which have been provided to FHWA field offices regarding the implementation of regulations issued by the Council on Environmental Quality under the National Environmental Policy Act. These instructions will govern Federal-aid highway projects pending the implementation of more comprehensive FHWA procedures.

DATES: The interim instructions were effective on November 30, 1979, and will expire on June 1, 1980.

FOR FURTHER INFORMATION CONTACT: Mr. Edward V. A. Kussy, Office of the Chief Counsel, (202) 426-0791, or Mr. Dale E. Wilken, Office of Environmental Policy, (202) 426-0106, Federal Highway Administration, 400 Seventh Street, SW., Washington, D.C. 20590. Office hours are from 7:45 a.m. to 4:15 p.m. ET, Monday through Friday.

Issued on: December 18, 1979.

Karl S. Bowers,

Federal Highway Administrator.

Environmental Impact and Related Procedures [FHWA Notice 6640.18]

1. *Purpose.* To provide information and guidance on environmental impact and related procedures which apply to

the Federal-Aid Highway Program as of November 30, 1979.

2. *Background.* a. Present Federal Highway Administration (FHWA) procedures implementing the National Environmental Policy Act (NEPA) of 1969, as amended, are contained in Federal-Aid Highway Program Manual, Volume 7, Chapter 7, Section 2 (FHPM 7-7-2) Environmental Impact and Related Statements, and Part 771 of title 23, Code of Federal Regulations (CFR).

b. On November 29, 1978, the Council on Environmental Quality (CEQ) issued regulations for implementing the procedural provisions of NEPA (43 FR 55978-56007). These regulations apply to all agencies of the Federal Government and are codified in Parts 1500-1508 of title 40, CFR. In response to the CEQ regulations, the Department of Transportation issued DOT Order 5610.1C entitled "Procedures for Considering Environmental Impacts; Policies and Procedures" on September 18, 1979 (44 FR 56420-56433, Oct. 1, 1979).

c. The FHWA is currently revising its procedures for implementing NEPA to incorporate the provisions of the CEQ regulations and the DOT Order into its program activities. Proposed procedures were published on October 15, 1979, for notice and comment (44 FR 59438-59461). The closing date for receipt of comments has been extended until December 3.

d. As of November 30, 1979, the CEQ regulations and the DOT Order are fully applicable to FHWA activities (40 CFR 1506.12; DOT Order, paragraph 18).

3. *Action.* a. For all NEPA-related activities and NEPA-related documents processed by FHWA on or after November 30, 1979, compliance with the CEQ regulations and DOT Order 5610.1C is required to the full extent described therein. Present FHWA procedures (FHPM 7-7-2) will continue to apply where the CEQ regulations and/or DOT Order 5610.1C are not applicable (e.g., final environmental impact statements whose draft were filed by July 30, 1979).

b. The proposed procedures published byFHWA on October 15 should be used as supplemental guidance by FHWA offices and State highway agencies until final regulations are issued.

[FR Doc. 79-39693 Filed 12-28-79; 8:45 am]
BILLING CODE 4910-22-M

DEPARTMENT OF THE TREASURY

Customs Service

Availability of Reprinted Looseleaf Edition of Customs Regulations

AGENCY: U.S. Customs Service, Department of the Treasury.

ACTION: Notice of availability.

SUMMARY: This document informs the public that an updated reprinted looseleaf edition of the Customs Regulations (19 CFR Chapter I) is available from the Government Printing Office. In addition to the Customs Regulations, including all changes made through December 31, 1978 (Treasury Decision 78-494), the reprint includes Treasury Department and Customs Service Delegation Orders, and an appendix containing the text of, or references to, sections of law and the text of regulations administered by other Government departments or agencies and enforced wholly or in part by Customs.

FOR FURTHER INFORMATION CONTACT: Shannon McCarthy, Regulations and Research Division, U.S. Customs Service, 1301 Constitution Avenue, N.W., Washington, D.C. 20229 (202-566-8237).

SUPPLEMENTARY INFORMATION:

Background

The regulations of the Customs Service, codified in Title 19, Chapter I, Code of Federal Regulations (19 CFR Chapter I), have been issued by the Commissioner of Customs, with the approval of the Secretary of the Treasury, for the purpose of carrying out the Customs and navigation laws and other laws administered by Customs.

Title 19, Code of Federal Regulations, is published annually, revised as of April 1 of each year, by the Office of the Federal Register. In the interest of having the regulations as up to date as possible, Customs has the Government Printing Office print a looseleaf edition which is updated by the issuance of sets of revised pages three or four times each year. In addition to the regulations, the looseleaf edition also includes orders of the Secretary of the Treasury relating to the rights, privileges, powers, and duties of the Commissioner of Customs and other Customs personnel, and Customs Delegation Orders. An appendix to the looseleaf edition contains the text of, or references to, sections of law and the text of regulations administered by other Government departments or agencies and enforced wholly or in part by Customs.

Numerous sets of revised pages to the regulations have been issued since the last general reprint was prepared in 1976. As part of an ongoing program to improve the utility of the regulations, Customs has prepared a new reprint, including all changes through December 31, 1978 (Treasury Decision 78-494). It is anticipated that there will be another reprinting during the first quarter of 1980, which will include all changes through December 31, 1979.

Orders for the new reprint are now being accepted by the Government Printing Office. Current subscribers will receive the reprint automatically. New subscribers may order the reprint by requesting the "Customs Regulations of the United States, [CRUS] (file code 1F)" from the Superintendent of Documents, U.S. Government Printing Office, Washington, D.C. 20402. The yearly subscription price of $37.00 will entitle subscribers to receive the 1980 as well as the 1979 reprint.

A different printing process and format have been used for this reprint. While every effort has been made to ensure correctness, users may notify the U.S. Customs Service, Regulations and Research Division, Washington, D.C. 20229, of any typographical or printing errors in order that corrections may be made. Suggestions for improvements also are requested.

William T. Archey,
Acting Commissioner of Customs

December 26, 1979.

[FR Doc. 79-39665 Filed 12-28-79; 8:45 am]
BILLING CODE 4810-22-M

Office of the Secretary

Privacy Act of 1974; Proposed New System of Records; Correction

The Office of the Secretary, Department of the Treasury published at 68058 (FR Doc. 79-36686) of the November 28, 1979 issue of the Federal Register, a notice of a proposed system of records, Treasury/OS 00.075, entitled Legislative Affairs Vote Tracking System. The effective date of the Notice was to be January 2, 1980 if the Office of Management and Budget granted a 60 day waiver. The waiver has not been granted, thus the effective date of the system must be corrected to January 30, 1980.

Dated: December 20, 1979.

Walter J. McDonald,
Assistant Secretary (Administration).

[FR Doc. 79-39835 Filed 12-28-79; 8:45 am]
BILLING CODE 4810-25-M

INTERSTATE COMMERCE COMMISSION

Environmental Impact Statement for Motor Carrier Regulatory Reform

AGENCY: Interstate Commerce Commission, Energy and Environment Branch.

ACTION: Notice of withdrawal of previously issued notice of intent to prepare an environmental impact statement for motor carrier regulatory reform initiatives.

SUMMARY: The notice of intent to prepare an environmental impact statement for motor carrier regulatory reform initiatives appearing at 44 FR 71495 (1979) is withdrawn as prematurely issued.

FOR FURTHER INFORMATION CONTACT: Carl Bausch, Telephone: (202) 275-7916.

Agatha L. Mergenovich,

Secretary.

[FR Doc. 79-39701 Filed 12-28-79; 8:45 am]

BILLING CODE 7035-01-M

Fourth Section Application for Relief

December 26, 1979.

This application for long-and-short-haul relief has been filed with the I.C.C.

FSA No. 43777, Trans-Continental Freight Bureau, Agent No. 545, rates on canned or preserved foodstuffs, not cold-pack nor frozen, in carloads, from stations in Arizona, California, Idaho, Nevada, New Mexico, Oregon, Utah and Washington, to Dallas and Houston, TX. Rates are scheduled to be published in its Tariff ICC TCFB 3002-Q. Grounds for relief—origin rate relationship.

The application also asks waiver of the 15 day protest period from date of publication in the Federal Register. Grounds for the waiver are carriers interests in earliest publication. The waiver has been denied for lack of sufficient justification. Protests against grant of relief are due at the Offices of the Commission, Suspension Board, in Washington, DC, on or before January 15, 1980.

By the Commission.

Agatha L. Mergenovich,

Secretary.

[FR Doc. 79-39702 Filed 12-28-79; 8:45 am]

BILLING CODE 7035-01-M

[Finance Docket No. 29176]

Chicago & Illinois Western Railroad Co.—Acquisition—Chicago & Illinois Western Railroad; IC Industries, Inc., and Illinois Central Gulf Railroad Co.—Control—Chicago & Illinois Western Railroad Co., Exemption

AGENCY: Interstate Commerce Commission.

ACTION: Notice of proposed exemption.

SUMMARY: IC Industries, Inc. (ICI) and Illinois Central Gulf Railroad Company (ICG) seek to gain indirect control of Chicago & Illinois Western Railroad Company (C&IW-DE), a Delaware Corporation organized on October 25, 1979. ICI presently directly controls Chicago & Illinois Western Railroad Company (C&IW-IL), an Illinois corporation. In the proposed transaction C&IW-DE will transfer its common stock to C&IW-IL and will acquire substantially all of its assets and assume substantially all of its liabilities. Upon completion of that transaction, C&IW-IL will dividend the C&IW-DE stock to ICI which will contribute the stock to ICG, which in turn will contribute the stock to a non-carrier, Missisippi Valley Corporation (a directly owned subsidiary of ICG). A petition was filed with the Interstate Commerce Commission on November 8, 1979, seeking exemption from 49 USC 10901, 11343-11347. The exemption from 49 USC 10901 is for the limited purpose of C&IW-DE acquiring certain assets, subject to certain liabilities of C&IW-IL in exchange for all the capital stock of C&IW-DE. The remaining sections from which exemption is sought, 49 USC 11343-11347, require the approval of the transaction prior to control of a carrier taking place. ICI, ICG and C&IW-DE, are seeking exemption from these sections under 49 U.S.C. 10505 on the basis that Commission review of the transaction is unnecessary.

DATES: Comments must be received on or before January 30, 1980.

ADDRESS: Send comments to: Interstate Commerce Commission, 12th & Constitution Ave., N.W., Washington, DC 20423.

All written submissions will be available for public inspection during regular business at the same address. Written submissions should refer to the above-docket number.

FOR FURTHER INFORMATION CONTACT: Michael Erenberg, 202-275-7245.

SUPPLEMENTARY INFORMATION: C&IW-DE, ICG and ICI filed a joint petition for exemption under 49 U.S.C. 10505 on November 8, 1979, in order to exempt their anticipated corporate reorganization from the requirements of obtaining prior Commission approval under 49 U.S.C. 10901 and 11343-11347.

Petitioners claim that the proposed transaction will simplify the corporate form of the ICI controlled railroad operations, but will not affect railroad operations. ICI will continue in direct control of ICG. It is claimed that no other carrier, shipper, the public, or the present operations of the operating railroads will be affected. Further it is contended that the transactions' effect on the National Transportation Policy (49 USC 10101) will be neutral. It will merely simplify the corporate organization. These assertions should be addressed in any comments.

The Transaction

ICI is a diversified holding compnay which directly controls both C&IW-IL and ICG. ICG is a wholly owned subsidiary of ICI.

C&IW-IL is an Illinois corporation organized in 1903. It is a Class II switching railroad that operates solely within Cook County, IL over 9.37 miles of main track and 17.45 miles of yard track and sidings. It has trackage rights covering an additional 1.93 miles.

C&IW-DE is a Delaware corporation, recently organized and will assume the operations, assets, and liabilities of C&IW-IL. In this process C&IW-DE's place will shift in the ICI corporate organization. C&IW-DE proposes to issue 1,000 shares of common stock at a par value of $1 per share. A related application docketed as F.D. No. 29175, under 49 U.S.C. 11301 has been filed.

Petitioners contend that the transaction will be in the public interest. ICI, while continuing in direct control of ICG, will take indirect control of the C&IW-DE property. ICG presently performs accounting functions for C&IW-IL as well as having common seniority lists for many of their union employees. These arrangements will continue with C&IW-DE after the corporate reorganization. Although expecting no adverse impact on labor interests, the parties are willing to have the Commission's approval of this petition conditioned on protecting employees who are affected by these transactions in accordance with the requirements established in *New York*

Dock RY.-Control-Brooklyn Eastern Dist., 360 I.C.C. 60 (1979).

Petitioners allege that the transaction will not adversely affect other carriers, shippers, the public, or the present operations of either the C&IW-DE property or ICG. They also maintain that the transaction will not have an adverse impact on energy consumption or the environment.

It is argued that the usual regulatory requirements contained in 49 U.S.C. 11343-11347 would be an undue burden on the petitioners and would serve little or no useful public purpose. Further, to the extent C&IW-DE acquires certain assets, subject to certain liabilities, of C&IW-IL exemption is sought from 49 U.S.C. 10901.

Petitioner has argued the ICI has joined in this petition for exemption out of an abundance of caution. However, it states that as a general rule a carrier seeking to obtain indirect control when it is sacrificing direct control needs no Commission approval. However, since C&IW-DE is a new corporation, this exclusion does not apply.

The Statute

Acquisition of control of a carrier by (1) a corporation that controls a carrier and (2) another carrier, are transactions that require the approval and authority of the Commission under 49 U.S.C. 11343-11347. To seek Commission approval, an application must be filed in compliance with the ICC *Railroad Acquisition, Control, Merger, Consolidation, Coordination Project, Trackage Rights and Lease Procedures*, 49 C.F.R. Part 1111 (1978) (Consolidation Procedures). ICI and ICG have requested an exemption from 49 U.S.C. 11343-11347 so that it will not have to file an application under the Consolidation Procedures.

A railroad providing transportation subject to our jurisdiction may acquire or operate an extended or additional railroad line if it obtains the approval and authority of the Commission under 49 U.S.C. 10901. C&IW-DE has requested exemption from 49 U.S.C. 10901 for the limited purpose of acquiring the substantial assets, subject to certain liabilities, of C&IW-IL.

We can exempt a matter related to a rail carrier under 49 U.S.C. 10505 if it is (1) of limited scope; (2) is not necessary to carry out the transportation policy of 49 U.S.C. 10101 of this subtitle; (3) would be an unreasonable burden; and (4) would serve little or no useful public purpose.

Petitioners believe that this transaction is the type of transaction which Congress intended the Commission to exempt when it adopted 49 U.S.C. 10505. Before granting an exemption, we are required to provide the opportunity for a proceeding. This request for comments on the proposed exemption of the proposed transactions is that opportunity. All comments filed in response to this notice, along with the petition, will be used to determine whether or not the exemption under 49 U.S.C. 10505 should be granted.

This proceeding is instituted under the authority of 49 U.S.C. 10505 and pursuant to 5 U.S.C. 553, 559.

This is not a major action significantly affecting either energy consumption or the quality of the human environment.

Dated: December 19, 1979.

By the Commission, Chairman O'Neal, Vice-Chairman Stafford, Commissioners Gresham, Clapp, Christian, Trantum, Gaskins, and Alexis.

Agatha L. Mergenovich,

Secretary.

[FR Doc 79-39703 Filed 12-28-79; 8:45 am]

BILLING CODE 7035-01-M

[Directed Service Order No. 1398; Authorization Order No. 11]

Kansas City Terminal Railway Co. Directed To Operate Over Chicago, Rock Island & Pacific Railroad Co., Debtor (William M. Gibbons, Trustee); Decision

Decided: December 12, 1979.

On September 26, 1979, the Commission directed Kansas City Terminal Railway Company (KCT) to provide service as a directed rail carrier (DRC) under 49 U.S.C. § 11125 over the lines of the Chicago, Rock Island & Pacific Railroad Company, Debtor (William M. Gibbons, Trustee) ("RI"). *See* Directed Service Order No. 1398, *Kansas City Term. Ry. Co.—Operate—Chicago, R.I. & P.* 360 I.C.C. 289 (1979), 44 FR 56343 (October 1, 1979). In DSO No. 1398 (Sub-No. 1), this authority was extended through March 2, 1980, subject to certain modifications. *See* DSO No. 1398 (Sub-No. 1) (decided November 30, 1979, and served December 3, 1979), (44 FR 70733, December 10, 1979).

DSO No. 1398 required KCT to inspect RI's lines and related facilities prior to commencing service over any line. *See* DSO No. 1398, 360 I.C.C. at 298 (44 FR 56346, column 1). The DRC was authorized to perform "minor" rehabilitation to RI lines, rights-of-way, roadway structures and related facilities without prior Commission approval. *See* DSO No. 1398, 360 I.C.C. at 303 (44 FR 56348, Column 1). In Supplemental Order No. 9, the Commission redefined "minor" line rehabilitation as rehabilitation which: "(1) would cost less than an average of $7,500 (for materials) per mile; and (2) can be completed within the initial 60-day directed service period." *See* Supplemental Order No. 9 (served November 15, 1979) (44 FR 67028, November 21, 1979).

In DRC Report No. 10, KCT identified a large percentage of RI tracks which were in need of rehabilitation. KCT submitted a list of proposed rehabilitation work on two segments of RI's Denver line, a distance of 49.8 miles. The two track segments involved in this request are from Levant to Goodland, KS (M.P. 396.0 to M.P. 423.8) covering 27.8 miles, and from Plymouth to Fairbury, NE (M.P. 597.8 to M.P. 155.5) covering 22* miles. *See* DRC Report No. 10 (dated November 1, 1979).

Since the proposed rehabilitation work cannot be completed within the initial 60-day period (which expired December 3, 1979), Commission authorization is a necessary prerequisite to KCT's proposed rehabilitation.

KCT seeks Commission authorization to commence the requested rehabilitation on the following grounds: (1) the work is routine rehabilitation which is required to bring the track into compliance with FRA Track Safety Standards for Class I track and back into full service; (2) FRA granted a limited waiver for these two track segments but imposed severe operating restrictions; and (3) these operation restrictions impose operating difficulties and increase the expense of directed-service.

The average per mile cost of materials and labor for rehabilitation of these lines is $7,130.11 for the work proposed between Levant and Goodland, KS, and $8,759.63 for the work proposed between Plymouth and Fairbury, NE.

The total cost of rehabilitation is approximately $313,924. The proposed work is to begin as soon as authorized and is to be completed within 45 days from the date of service of this decision.

For the following reasons, we believe the requested rehabilitation authority should be denied. As we stated in DSO No. 1398 (Sub-No. 1), *supra* at p. 11, (44 FR 70736, Column 1), directed service operations are winding down and will totallay cease on March 2, 1980. No showing has been made that the

*Discrepancy account divisional mile-post change; see attachment B to DRC Report No. 10 (Table 2 to this decision).

government will recoup the costs of rehabilitation. Further, the claim that immediate rehabilitation will avoid greater rehabilitation costs in the long run is not convincing because directed service will expire in just a matter of weeks. This is no time to be spending federal money on projects which may not even be completed until weeks or days before the end of directed service. If an urgent emergency exists, the railroad should perhaps request financial assistance from the shippers who would presumably benefit. Applications from other railroads for noncompensated temporary authority, as we indicated previously, are also encouraged.

We find:

1. This action will not significantly affect either the quality of the human environment or the conservation of energy resources. *See* 49 CFR Parts 1106, 1108 (1978).

It is ordered,

1. The DRC's request in DRC Report No. 10 is denied.

TABLE 1.—*Requested Track Rehabilitation Between Levant (M.P. 396.0) to Goodland, Kansas (M.P. 423.8)*

Mile	Labor & other cost	Material cost	Total cost	Amount over $5,000
423	$2,640	$3,080	$5,720	$720
421	3,372	3,934	7,306	2,306
420	3,180	3,710	6,890	1,890
419	2,712	3,164	5,876	876
418	3,048	3,556	6,604	1,604
413	3,240	3,780	7,020	2,020
412	4,584	5,348	9,932	4,932
411	4,584	5,348	9,932	4,932
410	3,840	4,480	8,320	3,320
409	3,600	4,200	7,800	2,800
408	3,120	3,640	6,760	1,760
405	3,000	3,500	6,500	1,500
404	3,000	3,500	6,500	1,500
401	3,564	4,158	7,722	2,722
400	3,000	3,500	6,500	1,500
399	2,520	2,940	5,460	460
397	2,940	3,340	6,370	1,370
Total 17	$55,944	$65,268	$121,212	$36,212

TABLE 2.—*Requested Track Rehabilitation Between Plymouth (M.P. 597.8) to Fairbury, Nebraska (M.P. 1255.5)*

Mile	Labor & other cost	Material cost	Total cost	Amount over $5,000
155	$3,000	$3,500	$6,500	$1,500
154	3,000	3,500	6,500	1,500
153	6,360	7,420	13,780	8,780
152	4,200	4,900	9,100	4,100
151	2,880	3,360	6,240	1,240
150	4,500	5,250	9,750	4,750
149 (Equation)	2,928	3,416	6,344	1,344
611	6,360	7,420	13,780	8,780
610	3,000	3,500	6,500	1,500
609	3,000	3,500	6,500	1,500
608	5,700	6,650	12,350	7,350
607	3,000	3,500	6,500	1,500
606	3,420	3,990	7,410	2,410
605	3,216	3,752	6,968	1,968
604	3,720	4,340	8,060	3,060
603	4,620	5,390	10,010	5,010
602	5,100	5,950	11,050	6,050
601	3,060	3,570	6,630	1,630
600	2,940	3,430	6,370	1,370
599	3,720	4,340	8,060	3,060
598	7,500	8,750	16,250	11,250
597	3,720	4,340	8,060	3,060
Total 22	$88,844	$103,768	$192,712	$82,712
Grand Total 39	$144,888	$169,036	$313,924	$118,924

2. This decision shall be effective on its service date.

By the Commission. Chairman O'Neal, Vice Chairman Stafford, Commissioners, Gresham, Clapp, Christian, Trantum, Gaskins, and Alexis. Chairman O'Neal, Vice Chairman Stafford, and Commissioner Clapp, dissenting. Commissioner Christian not participating.

Agatha L. Mergenovich,

Secretary.

[FR Doc. 79-39540 Filed 12-28-79; 8:45 am]

BILLING CODE 7035-01-M

Sunshine Act Meetings

Federal Register
Vol. 44, No. 251
Monday, December 31, 1979

This section of the FEDERAL REGISTER contains notices of meetings published under the "Government in the Sunshine Act" (Pub. L. 94-409) 5 U.S.C. 552b(e)(3).

CONTENTS

	Items
Commodity Futures Trading Commission	1
Federal Home Loan Bank Board	2
International Trade Commission	3
National Credit Union Administration	4
National Mediation Board	5
National Transportation Safety Board	6, 7
Nuclear Regulatory Commission	8
Railroad Retirement Board	9

1

COMMODITY FUTURES TRADING COMMISSION.

TIME AND DATE: 10:30 a.m., January 2, 1980.

PLACE: 2033 K Street NW., Washington, D.C., 8th Floor Conference Room.

STATUS: Closed.

MATTERS TO BE CONSIDERED:
Surveillance Matters.

CONTACT PERSON FOR MORE INFORMATION:
Jane Stuckey, 254-6314.

[S-2492-79 Filed 12-27-79; 10:54 am]
BILLING CODE 6351-01-M

2

FEDERAL HOME LOAN BANK BOARD.

TIME AND DATE: 9:30 a.m., January 3, 1980.

PLACE: 1700 G Street NW., Sixth Floor, Washington, D.C.

STATUS: Open Meeting.

CONTACT PERSON FOR MORE INFORMATION:
Franklin O. Bolling (202-377-6677).

MATTERS TO BE CONSIDERED:

Application for Branch Office—Fidelity Federal Savings and Loan Association, West Palm Beach, Florida
Application for Branch Office—Jefferson Federal Savings and Loan Association, Louisville, Kentucky
Application for Branch Office—Washington Federal Savings and Loan Association, Stillwater, Minnesota
Application for Branch Office—Citizens Federal Savings and Loan Association of Port Huron, Port Huron, Michigan
Application for Branch Office—First Federal Savings and Loan Association of Phoenix, Phoenix, Arizona
Application for Limited Facility—First Federal Savings and Loan Association, Fort Pierce, Florida
Further Extension of Time—Central Federal Savings and Loan Association, San Diego, California
Service Corporation Application—Mutual Federal Savings and Loan Association of Pensacola, Pensacola, Florida
Application for Bank Membership—Concord Savings Bank, Concord, New Hampshire
Bank Membership and Insurance of Accounts—People's Savings and Loan Association, LaGrande, Oregon
Bank Membership and Insurance of Accounts—Front Royal Federal Savings and Loan Association, Front Royal, Virginia
Bank Membership and Insurance of Accounts—Gateway Savings and Loan Association, San Francisco, California
Application for Bank Membership—The Stamford Savings Bank, Stamford, Connecticut
Request for a Commitment to Insure Accounts—Community Savings and Loan Association, Baker, Louisiana
Conversion to a State-Chartered Mutual Association—First Federal Savings and Loan Association of Brownwood, Brownwood, Texas
Preliminary Application for Conversion to a Federal Mutual Association—Standard Savings and Loan Association, Columbia, South Carolina
Modification of Merger Condition—First Federal Savings and Loan Association of Tuscaloosa, Tuscaloosa, Alabama
Moratorium on Branching in Hamilton County, Ohio
Regulation on Proposed Amendments Concerning Director and Officer Management Interlocks
Regulation on Investment in HUD Section 8 Low-Income Housing

[S-2500-79 Filed 12-27-79; 4:03 pm]
BILLING CODE 6720-01-M

3

[USITC SE-80-2]

INTERNATIONAL TRADE COMMISSION.

TIME AND DATE: 10 a.m., Tuesday, January 8, 1980.

PLACE: Room 117, 701 E Street NW., Washington, D.C. 20436.

STATUS: Open to the public.

MATTERS TO BE CONSIDERED:

1. Agenda.
2. Minutes.
3. Ratifications.
4. Petitions and complaints (if necessary): a. Drycleaning processing machines (Docket No. 610).
5. Investigation TA-201-41 (Certain Fish)—vote on remedy, if necessary.
6. Steel wire rope—petition for rulemaking (Docket No. 583).
7. Any items left over from previous agenda.

CONTACT PERSON FOR MORE INFORMATION:
Kenneth R. Mason, Secretary, (202) 523-0161.

[S-2493-79 Filed 12-27-79; 2:41 pm]
BILLING CODE 7020-02-M

4

NATIONAL CREDIT UNION ADMINISTRATION.

Notice of Change in Date of Board Meeting

TIME AND DATE: 3 p.m., December 28, 1979.

PLACE: 1776 G Street NW., Washington, D.C., Board Room, 7th Floor.

STATUS: Open.

CHANGE IN DATE OF PREVIOUSLY ANNOUNCED MEETING:
The previously announced open meeting of the National Credit Union Administration Board (44 FR 76417, December 26, 1979) scheduled for Thursday, December 27, 1979 has been changed to Friday, December 28, 1979.

RECESS: 3:15 p.m.

TIME AND DATE: 3:30 p.m., December 28, 1979.

PLACE: 1776 G Street NW., Washington, D.C., Board Room, 7th Floor.

STATUS: Closed.

CHANGE IN DATE OF PREVIOUSLY ANNOUNCED MEETING:
The previously announced closed meeting of the National Credit Union Administration Board (44 FR 76417, December 26, 1979) scheduled for Thursday, December 27, 1979 has been changed to Friday, December 28, 1979.

CONTACT PERSON FOR MORE INFORMATION:
Rosemary Brady, Secretary of the Board, telephone (202) 357-1100.

[S-2498-79 Filed 12-27-79; 3:52 pm]
BILLING CODE 7535-01-M

5

NATIONAL MEDIATION BOARD.

TIME AND DATE: 2 p.m., Wednesday, January 2, 1980.

PLACE: Board Hearing Room, 8th Floor, 1425 K St., N.W., Washington, D.C.

STATUS: Open.

MATTERS TO BE CONSIDERED:

(1) Ratification of Board actions taken by notation voting during the month of December, 1979.

(2) Other priority matters which may come before the Board for which notice will be given at the earliest practical time.

SUPPLEMENTARY INFORMATION: Copies of the monthly report of the Board's notation voting actions will be available from the Executive Secretary's Office following the meeting.

CONTACT PERSON FOR MORE INFORMATION:
Mr. Rowland K. Quinn, Jr., Executive Secretary, Tel: (202) 523–5920.

Date of Notice: December 26, 1979.

[S-2495-79 Filed 12-27-79; 2:41 pm]
BILLING CODE 7550-01-M

6

NATIONAL TRANSPORTATION SAFETY BOARD.

TIME AND DATE: 9 a.m., Thursday, January 3, 1980. [NM-80-1]

PLACE: NTSB Board Room, National Transportation Safety Board, 800 Independence Avenue, S.W., Washington, D.C. 20594.

STATUS: Open.

MATTERS TO BE CONSIDERED:

A majority of the Board has determined by recorded vote that the business of the Board requires that the following items be discussed on this date and that no earlier announcement was possible.

1. *Aircraft Accident Report*—Air New England, Inc., deHavilland DHC-6-300, N383EX, Hyannis, Massachusetts, June 17, 1979.
2. *Recommendation* to the Federal Aviation Administration re upper age limit for pilots in Part 135 operations.
3. *Marine Accident Report*—Fire on Canadian Bulk Carrier CARTIERCLIFFE HALL in Lake Superior, June 5, 1979, and *Recommendations* to the Department of State and U.S. Coast Guard.
4. *Marine Accident Report*—Sinking of the M/B SIDS in the Atlantic Ocean near Absecon Inlet, Atlantic City, New Jersey, January 18, 1979, and *Recommendations* to the U.S. Coast Guard.

CONTACT PERSON FOR MORE INFORMATION:
Sharon Flemming, (202) 472-6022.

December 27, 1979.

[S-2496-79 Filed 12-27-79; 3:10 pm]
BILLING CODE 4910-58-M

7

NATIONAL TRANSPORTATION SAFETY BOARD.

TIME AND DATE: 9 a.m., Friday, January 4, 1980. [NM-80-2].

PLACE: NTSB Board Room, National Transportation Safety Board, 800 Independence Avenue SW., Washington, D.C. 20594.

STATUS: The first three items will be open to the public; the last item will be closed under Exemption 10 of the Government in the Sunshine Act.

MATTERS TO BE CONSIDERED:

A majority of the Board has determined by recorded vote that the business of the Board requires that the following items be discussed on this date and that no earlier announcement was possible.

1. *Proposed Special Study*—Assessment of Motor Vehicle Tree/Shrub Accidents on U.S. Highways, Streets, and Roads.
2. *Discussion* of FY 80 Safety Objective on Part 135 Surveillance and Enforcement.
3. *Discussion* of major accident report conclusions v. findings of fact.
4. *Opinion and Order*—Administrator v. Sims, Dkt. SE-3425; Administrator v. McGhee, Dkt. SE-3426; disposition of the appeals of both parties.

CONTACT PERSON FOR MORE INFORMATION:
Sharon Flemming, 202-472-6022.

December 27, 1979.

[S-2497-79 Filed 12-27-79; 3:10 pm]
BILLING CODE 4910-58-M

8

NUCLEAR REGULATORY COMMISSION.

TIME AND DATE: January 2 and 3, 1980.

PLACE: Commissioners' Conference Room, 1717 H St. NW., Washington, D.C.

STATUS: Open/Closed.

MATTERS TO BE CONSIDERED:

Wednesday, January 2, 1:30 p.m.

1. Discussion of Management—Organization and Internal Personnel Matters (Approximately hours, closed—Exemptions 2 and 6).

Thursday, January 3, 9:30 a.m.

1. Continuation of Commission's Decision-Making Role in Emergency Response (Tentative, Approximately 1½ hours, public meeting).
2. Affirmation Session (Approximately 5 minutes, public meeting).
   a. Amend. Part 50 to Require Periodic Updates of FSARs.
   b. Revisions to Part 2.

ADDITIONAL INFORMATION: On December 21, the Commission determined pursuant to 5 U.S.C. 552b(e)(1) and § 9.107(a) of the Commission's Rules that Commission business required that the Affirmation of Gainesville, held that day, be held on less than one week's notice to the public.

CONTACT PERSON FOR MORE INFORMATION:
Walter Magee (202) 634-1410.
Roger M. Tweed,
Office of the Secretary.
December 26, 1979.

[S-2494-79 Filed 12-27-79; 2:41 pm]
BILLING CODE 7590-01-M

9

RAILROAD RETIREMENT BOARD.

TIME AND DATE: 9 a.m., January 3, 1980.

PLACE: Board's meeting room on the 8th floor of its headquarters building at 844 Rush Street, Chicago, Illinois 60611.

CHANGES IN THE MEETING: Additional items to be considered at the portion of the meeting which will be open to the public.

(2a) Pilot study to provide employees annuity estimates.

(2b) Interview by industrial psychologist.

Additional item to be considered at the portion of the meeting which will be closed to the public:

(6) *Mary Ann Kelly* v. *Railroad Retirement Board.*

CONTACT PERSON FOR MORE INFORMATION:
R. F. Butler, Secretary of the Board, COM No. 312-751-4920, FTS No. 387-4920.

[S-2499-79 Filed 12-27-79; 4:00 pm]
BILLING CODE 7905-01-M

Federal Register

Monday
December 31, 1979

Part II

Department of Transportation

Federal Railroad Administration

Railroad Freight Car Safety Standards; Safety Glazing Standards—Locomotives, Passenger Cars and Cabooses

DEPARTMENT OF TRANSPORTATION

Federal Railroad Administration

49 CFR Part 215

[Docket No. RSFC-6, Notice 2]

Railroad Freight Car Safety Standards

AGENCY: Federal Railroad Administration (FRA), Department of Transportation (DOT).

ACTION: Final rule.

SUMMARY: This document revises Part 215 (49 CFR Part 215). The revised part contains FRA's rules applicable to railroad freight cars. The revised rules update, consolidate, and clarify the old rules and eliminate certain rules no longer considered necessary for safety. This action is taken by FRA to improve its safety regulatory program.

EFFECTIVE DATE: These rules, with the exception of § 215.15 (Periodic Inspection), will become effective on March 1, 1980. Section 215.15 is effective December 31, 1979 because it extends the deadline for accomplishing initial periodic inspections from December 31, 1979 to June 30, 1980.

FOR FURTHER INFORMATION CONTACT:

Principal Authors

Principal Program Person: Rolf Mowatt-Larssen, Office of Standards and Procedures, Federal Railroad Administration, Washington, D.C. 20590. Phone 202-426-0924.

Principal Attorney: Edward F. Conway, Jr., Office of the Chief Counsel, Federal Railroad Administration, Washington, D. C. 20590. Phone 202-426-8836.

SUPPLEMENTAL INFORMATION:

Background

Regulatory Reform

On March 23, 1978, the President issued Executive Order 12044. In that Order, he directed all Executive Agencies to adopt procedures to improve existing and future regulations. As a matter of policy, the Order requires that regulations be as simple and clear as possible, achieve legislative goals effectively and efficiently, and not impose unnecessary burdens. To achieve this policy objective, the Order requires Agencies to address the following considerations, among others, when developing regulations: (1) The need for and purposes of the regulation must be clearly established; (2) An opportunity must be provided for early participation and comment by other Federal Agencies, State and local governments, businesses, organizations, and individual members of the public; (3) Meaningful alternatives must be considered and analyzed before the regulation is issued; and (4) Compliance costs, paperwork, and other burdens on the public must be minimized.

In response to the policies set forth in Executive Order 12044, FRA initiated a General Safety Inquiry for the purpose of evaluating and improving its safety regulatory program.

This inquiry was announced in the May 8, 1978, issue of the Federal Register (43 FR 19696). That notice also announced that FRA would conduct a series of two-day public hearings. The notice stated that the purpose of the hearings would be to obtain information from the public that would help FRA to determine whether any of its existing regulations should be expanded in scope, revised, or revoked.

FRA has conducted all of the hearings announced in the notice. These hearings dealt with the following subjects: (1) locomotives (June 14 and 15, 1978); (2) freight cars and safety appliances (July 12 and 13, 1978); (3) power brakes (September 13 and 14, 1978); (4) track and related structures, appliances, and devices (November 15 and 16, 1978); and (5) signal and communications systems (February 21 and 22, 1979).

After reviewing the testimony presented at those hearings, and the written comments submitted in response to the hearing notice, FRA has begun the process of issuing proposed rules for the purpose of improving many of its existing rules and eliminating others no longer considered necessary for safety. To date, three notices of proposed rulemaking (NPRM) have been issued. These are as follows: (1) Freight Car Safety Standards (44 FR 1419; January 5, 1979); (2) Locomotive Inspection (44 FR 29604; May 21, 1979); and (3) Track Safety Standards (44 FR 52104; September 6, 1979).

As announced in the notice of proposed Freight Car Safety Standards, FRA conducted a public hearing on March 7, 1979, to provide an opportunity for interested persons and organizations to testify concerning those standards. At that hearing, testimony was presented by ten railroads, the Association of American Railroads (AAR), The Railway Labor Executives Association (RLEA), one private car owner, one car repair company, and two manufacturers of freight car components. In addition, written comments were submitted by railroads, private car owners, car repair companies, railroad unions, manufacturers of freight car components, a Federal agency, State and local agencies, members of Congress, and private persons. All of the testimony and comments have been reviewed and fully considered during the formulation of the final rules set forth in this document.

Most commenters expressed general support for the proposed rules. However, many recommended that revisions be made to one or more of the changes proposed by FRA. The following is a summary of many of the comments received and an explanation of the revisions made by FRA in response to those comments. The comments and related revisions have been organized under major subject headings.

The sequence of the subject headings in this preamble generally corresponds to the order in which they appear in the text of the final rule. However, periodic and pre-departure inspections and related issues are discussed first because they present major overriding issues that affect most of the provisions of the final rule.

I. Periodic and Pre-Departure Inspections and Related Issues

Periodic Inspection

Subpart C of the NPRM sets forth the proposed requirements applicable to the periodic inspection of freight cars. The proposal would permit these inspections to be based on time or mileage intervals and would permit an extension of the proposed intervals upon a showing that the extension requested is justified. Under current regulations, periodic inspections are required every year for high utilization cars and every 4 years for all other cars, except that the first inspection for new or reconditioned cars is due within two years for high utilization cars and 8 years for all other cars. The subpart also specifies the items to be inspected, provides that cars would have to be detrucked during the inspection and that trucks would have to be disassembled as necessary to examine the components. Finally, the proposed subpart would require private car repair companies to become subject to the proposed standards in order to perform periodic inspections.

All the railroads felt that Federally imposed periodic inspection cycles and requirements were unnecessary and unjustified. Trailer Train contended that the need for periodic inspections was never justified by FRA. The AAR contended that both the current and proposed periodic inspection requirements are "good practice or maintenance standards" as opposed to safety standards. Many railroads stated that periodic inspections are costly and ineffective from the standpoint of safety.

Many commenters also had problems with various aspects of the periodic inspection requirements contained in the proposed rule. It was noted that disassembly of trucks "to the extent necessary" would subject private car owners that contract out repairs to inspection charges over which they would have no control. One railroad commenter felt that truck disassembly would cause more injuries than would normally be caused by freight car component failure because truck disassembly involves concentrated exposure to hazards related to working with heavy duty truck bolsters, side frames, lifting equipment, and cutting and burning operations.

Private car owners commented that they would need time to develop a system to accurately record mileage and suggested a five year interval for periodic inspections. A number of commenters recommended that these inspections be scheduled anytime within the calendar year they are due to avoid overburdening repair shops.

Several alternatives to the proposed periodic inspection were given. The Association of American Railroads (AAR) felt that the one-spot repair system (small all-purpose repair site) coupled with major rebuilding at the car's "half-life" would suffice for safety and would be economically beneficial.

Most railroads stated that the proposed time and mileage intervals are arbitrary and do not take into consideration advanced designs and materials. It was felt that these intervals do not reflect safe wear limits and would not result in any savings. They offered mileage figures that varied from 150,000 to 400,000 for new and reconditioned cars. It was also suggested by one railroad that the time interval for inspections of high utilization cars be increased to 24 and 48 months. Another railroad wanted a "grandfather clause" to exempt what is done as routine maintenance under interchange rules from being required to be repeated as part of a periodic inspection.

One commenter suggested using the average mileage for a series of cars. Several commenters noted that accurate mileage records would be impossible unless a tamper proof odometer is developed.

The Burlington Northern objected to proposed § 215.61 (extension of periodic inspection intervals) insofar as that section would not apply to cars more than 20 years old and to other than high utilization cars. Burlington Northern contends that age does not necessarily reflect the condition of a car. Further, it asserts that other than high utilization cars are maintained to the same high standards as high utilization cars and travel fewer miles each year.

Proposed § 215.71(a) provides that a car would be considered "reconditioned" if it is equipped with roller bearings, is less than twenty years old, and complies with the proposed requirements set forth in paragraph (b) of that section. Under paragraph (b)(1)(ii), a car would not be considered "reconditioned" unless its wheels have at least 50 percent of useful tread wear remaining. Under the proposed rules, reconditioned cars would be subject to the extended periodic inspection intervals applicable to new cars.

Railroads, car owners, and repair companies contend that the 20-year limit for reconditioned cars under proposed § 215.71 is arbitrary and not based on the mechanical condition of a well-maintained car. One commenter pointed out that FRA's 20-year limit on reconditioning of cars conflicts with the AAR 25-year limit on rebuilding. AAR stated that the proposed restriction is not related to safety and that all of proposed § 215.71(a) should be eliminated.

The requirement that wheels on reconditioned cars have not less than 50 percent of useful tread wear remaining was also considered to have no relation to safety by commenters. One commenter noted that the wheels would have to be taken off a reconditioned car and put on *another* car. If this were done, the wheels would again have to be changed at half the usual time, thereby doubling the labor costs for changing of wheels on both cars. It was stated by one commenter that it would cost $1,600 per car to replace the wheels. In this regard, another commenter pointed out that this could cause a worsening of the current wheel shortage. One car manufacturer felt that if the wheel was in compliance with proposed § 215.23 (defective wheels), that should be good enough for safe operation.

In addition, Burlington Northern contends that roller bearings should not be required for reconditioned status. According to Burlington Northern, plain bearings are inherently safe.

Proposed § 215.95(b)(4) provides that, if a car has been given a periodic inspection based on mileage records, the estimated date on which the next inspection will be required must be stenciled on the car.

Several railroads pointed out that it would be almost impossible to estimate the due date for the next periodic inspection for cars scheduled for inspection on the basis of mileage.

After reviewing all pertinent comments and testimony, FRA has reevaluated the proposed periodic inspection procedures set forth in the NPRM. Based on that reevaluation, it has decided not to adopt the proposed periodic inspection requirements and to revoke the periodic inspection requirements now in effect.

The requirement that all freight cars be subjected to periodic inspections was issued by FRA on November 12, 1973 (38 FR 32232) and became effective on January 1, 1974. The purpose of this requirement was to assist the FRA in defining and resolving the many safety problems resulting from changes in the design of freight cars and in the railroad operating environment during the period 1945–70.

The rapid transition in freight car designs during this period was causing numerous problems in the draft and suspension systems of freight cars. Because the draft and suspension systems regulate the functional integrity of a car, their components are critical from the standpoint of safety. The draft system is comprised of the center sill, draft gear, coupler, body bolster and center plate. The suspension system includes wheels, axles, bearings, and truck components.

Changes in freight car design along with major changes in the operating environment, increasing deficits and mergers of railroads, all combined to give rise to FRA's concerns. A review of the period 1945–70 relative to these changes will assist in illustrating the concerns that shaped FRA's decision to prescribe the periodic inspection requirement.

By the late 1940's, freight cars that could carry 40 or 50 tons of cargo had been developed and were in general use. These cars varied in length between 40 and 50 feet. By the end of that decade, some 70-ton load-carrying capacity cars, predominantly hoppers and covered hoppers, had been introduced. It was not until the 1950's, however, that larger 50- to 70-ton cars were constructed on a wide scale. The increased load-carrying capacity of these cars was largely accomplished by increasing the size of their journals with little or no increase in the length of cars. Beginning with the early 1960's, the capacity of cars being placed in service was further increased to between 70 and 100 tons. This was accomplished through both expanding journal sizes and increasing the length of cars to as much as 90 feet.

The changes in freight car design that permitted increased load-carrying capacity included numerous combinations of increases in the width, length and height of each type of car, such as hopper, tank, box and flat cars. The increased length of cars, increase in

truck spacing, increased height, and resulting higher centers-of-gravity, contributed significantly to the development of freight car instability problems. The most prominent instability problem, known as the "rock-and-roll" phenomenon, generated increased dynamic forces on certain draft and suspension components, such as center plates, truck and body bolsters, truck side frames, bearings, snubbers, and axles. Additionally, some of the draft and suspension components of the larger 100-ton cars had not been provided with a sufficient proportional increase in size and strength necessary to compensate for these higher dynamic forces. These problems generated excessive wear and frequent premature failure of components of these larger cars.

The operating environment for freight cars was also undergoing significant changes during the period between 1945 and 1970. There was a trend to longer and heavier trains. In 1945, according to published industry statistics, the average freight train contained 52 cars and carried slightly over 1,100 tons of freight. By the 1970's, the average freight train contained 70 cars and carried slightly over 1,800 tons of freight. The trend to longer trains and heavier tonnage created situations where increased in-train dynamic forces also produced greater component wear and fatigue than had previously been experienced, particularly in the suspension and draft systems. Merger of railroads that were separate entities in 1945 reduced the number of interchange locations where equipment inspections were conducted. In addition, the shift to consolidated maintenance facilities brought about a reduction in the inspection and maintenance efforts of the railroads. Finally, the poor economic condition of the industry prompted deferral of equipment maintenance.

Observing these changes in the railroad operating environment alongside the changes in freight car design, FRA became concerned that draft and suspension components had not been sufficiently adapted to respond to these changes. This concern was validated by the abnormal wear patterns and premature failures of these components. Thus, in the absence of any industry-wide practice that monitored component performance, the periodic inspection requirement, which focused attention on suspension and draft systems, was adopted in response to these concerns.

Although the adoption of the periodic inspection requirement was an immediate response to these safety concerns, it was not the only action taken by FRA in an effort to resolve these problems. To assist in the definition and resolution of emerging problems, FRA embarked on a variety of cooperative research programs with various segments of the railroad industry. These research efforts encompassed a wide range of areas and interrelated projects, including studies of track structure, freight car truck design, and train handling techniques. Additionally, to provide ongoing research, a highly controlled test environment, Facility for Accelerated Service Testing (FAST), was created at the Transportation Test Center in Pueblo, Colorado. "FAST" allows rapid in-service simulation testing of freight cars, thus subjecting freight car components to vigorous examination and monitoring. Also, FRA's response was complemented by the self-initiated actions of the railroad industry to define and remedy the safety problems associated with new freight cars.

The cumulative results of these responses are embodied in a number of changes in freight car design. For example, to improve stability, the distance between truck centers for longer freight cars has been increased and constant contact side bearings and more effective snubbing devices have been introduced. The increasing use of continuously welded rail has also served to reduce the "rock-and-roll" phenomenon. Improved train handling techniques, provided by development of the Train/Track Dynamics Manual and increased dynamic braking capability, have also assisted in the reduction of the magnitude of some in-train force levels being encountered with longer and heavier trains.

The periodic inspection program has nearly accomplished its major objectives, namely, to assist in the definition of the scope and the correction of safety hazards presented by changes in freight car design and the operating environment.

FRA estimates that approximately ninety percent of the freight car fleet has received a periodic inspection. Once all freight cars have been so inspected and repaired as necessary, FRA believes that the objectives of the program will have been met and that there will no longer be a demonstrated need for retaining the current periodic inspection requirements.

In addition to having served its function and having stimulated other actions in response to safety problems, other reasons support the elimination of the Federally mandated periodic inspection requirement. The railroad industry has established comprehensive freight car maintenance programs and now recognizes the economic and safety benefits that these programs provide. Despite continuing deficits, railroads have made manpower and capital investments to upgrade and expand their maintenance facilities to sustain these programs. Elimination of the periodic inspection requirements, then, will give the railroad industry the flexibility and incentive to develop more efficient preventive maintenance inspection programs that are tailored to their varied needs and service conditions. Moreover, since the periodic inspections have served to help define and resolve safety problems, such a broad Federal requirement is no longer needed. Rather, FRA can now monitor areas of concern on a case-by-case basis.

In the future, FRA will focus its attention and concentrate its resources to resolve specific safety problems. Although FRA will rely heavily on the voluntary cooperation of the railroad industry and its employees, it will not hesitate to take whatever regulatory action is necessary to assure safety. However, FRA will strive to tailor each requirement to fit the immediate safety problem so that the desired safety result is achieved at a minimum cost to the industry and the public.

Some examples of past actions taken by FRA to identify and resolve specific safety problems with freight car components that were causing numerous accidents include the resolution of premature center plate failures on 100-ton covered hoppers, correction of center sill fractures on flexi-van cars, and removal of high carbon cast steel wheels that had a high incidence of failure. The prime example was the retrofit of 112 and 114 jumbo tank cars to improve their safety performance in derailments. A soon to be issued FRA report to the Congress entitled "Issues and Dimensions of Freight Car Size" will analyze specific problem areas and possible responses to those problems.

It also should be noted that elimination of the periodic inspection requirements achieves important policy objectives of Executive Order 12044, namely, reduction of the regulatory burden on railroads, and recognition of the degree to which technology has improved the design and quality of freight car components. Therefore, the requirement (§ 215.15) to periodically inspect railroad freight cars is being revoked. However, cars that have not yet received an initial periodic inspection will have to be so inspected. These cars are generally two types, older less-active cars and cars that have

been continuously in assigned service. Since many of these cars have been in service for decades and have never received a comprehensive inspection for safety defects, FRA believes that it is essential from the standpoint of safety that they be given an initial periodic inspection if they are to remain in service.

To provide railroads with ample time to accomplish this task, FRA is extending the time allowed for completion of initial periodic inspections by six months, until June 30, 1980. FRA is taking this action in response to the petition submitted (November 8, 1979) by the AAR indicating that the continuing freight car shortage during the past year has delayed completion of the periodic inspection program. Although the AAR petition requests a one-year extension, FRA believes that a six-month extension will provide sufficient time to accomplish the remaining initial periodic inspections. The requirement to conduct other periodic inspections is being revoked by the final rule; thus railroads can concentrate their efforts on accomplishing initial periodic inspections on the estimated ten percent of the freight fleet that has not yet received a periodic inspection.

Pre-departure Inspection

The proposed standards do not contain pre-departure inspection requirements such as those set forth in current § 215.23.

Most commenters agreed that pre-departure inspections should be retained. They stated that this was the most important inspection. One private car owner felt that this inspection is an especially effective means of detecting major problems in the suspension and draft systems. Another commenter noted that more car components are broken and made unsafe during switching than hauling on line.

Several railroads pointed out that the deletion of the required pre-departure inspection would result in little, if any, savings because this inspection would be continued to ensure compliance with the Power Brake and Safety Appliance Standards. Also, elimination of the knowledge requirement for penalty violations would make pre-departure inspections a "must". Some commenters contended that pre-departure inspection would more likely ensure safe performance than the periodic inspections.

On reconsideration, FRA agrees with the majority of commenters that the requirement to conduct a pre-departure inspection should be retained. This inspection plays a major role in ensuring that cars are not dispatched with critical "running" defects, such as broken center plates or cracked wheels, which have the demonstrated potential to cause derailments that result in injuries and fatalities. Moreover, even if this requirement were eliminated, pre-departure inspections would still have to be conducted to ensure compliance with the Power Brake and Safety Appliance Standards. Therefore, retention of the current requirement would impose little, if any, added expense or inconvenience on railroads.

However, FRA is not retaining the current requirement that the inspection be conducted in accordance with instructions approved by the Federal Railroad Administrator. Rather, cars will have to be inspected for the critical safety defects listed in this final rule. Each car with one or more of these defects will have to be tagged for movement for repair or removed from the train if it cannot be safely dispatched. Since the objective of the pre-departure inspection is to uncover and ensure repair of critical running defects listed in this final rule, FRA does not believe that there is a demonstrated need to retain the current requirement for submission of safety inspection instructions for the approval of the FRA Administrator.

Moreover, since the railroads will be held strictly liable for prohibited defects on all freight cars in service, FRA does not believe that the timing of the pre-departure inspection is critical, so long as it is conducted before a car is dispatched. Thus, § 215.13 of the final rule provides that the inspection shall be performed at each location where a freight car is placed in a train. This inspection may be made before or after the car is placed in the train.

Inbound Inspection

The proposed Freight Car Safety Standards do not contain procedures for the inbound inspection of freight cars. The Brotherhood of Railway Carmen (Carmen) favors adoption of a rule requiring an inbound inspection. They contend that this would facilitate prompt repairs, avoid the possibility that defective cars may be placed in outbound trains, and thus would significantly reduce the chances that a car would have to be removed from an outbound train.

FRA recognizes that inbound inspection of cars is a highly efficient means of facilitating the repair of defective cars in many settings. However, FRA does not believe that an inflexible Federal requirement is appropriate. Rather, it believes that safety will be better served if attention is focused on the pre-departure inspection, which could be conducted on an inbound or outbound basis. Moreover, since the railroads will be held strictly liable for critical "running" defects and high penalties will be imposed for dispatching cars with these defects, there will be substantial motivation for railroads to find and repair defective cars before they are placed in outbound trains.

II. Other Issues

Maintenance-of-way Cars

Under proposed § 215.3(c), maintenance-of-way cars, except those used exclusively in work train service, would be subject to the proposed standards. Many commenters stated that this would impose a severe financial burden on railroads. The average price of a new car was cited at $30,000, with individual railroads claiming that anywhere from 200 to 3,000 of their maintenance-of-way cars would either have to be replaced or operated only in work trains.

Some commenters pointed out that these cars are structurally sound and are limited to slow speeds and local trains. They noted that limiting the movement of these cars to work trains would also be very expensive. In this regard, one commenter complained that the proposal would cause an even greater shortage of revenue cars and motive power and would result in more congestion.

Many railroads claimed that they have not had accidents caused by maintenance-of-way cars. Therefore, they contend that the cost of bringing those cars into compliance with Part 215 or restricting their movement to work trains cannot be justified.

FRA recognizes that maintenance-of-way cars are not freely interchanged among railroads and that the railroads are aware of the condition of these cars and impose restrictions on their operation to assure safe operation.

FRA has reconsidered its proposals regarding maintenance-of-way cars in light of the comments and testimony of interested persons. During this process, it considered the cost of bringing these cars into compliance with Part 215 against the safety benefit that would be derived. As a result, FRA has concluded that the substantial cost of bringing these cars into compliance with the standards and either replacing those that cannot comply or restricting their movement to work trains, cannot be justified at this time. FRA does not have data indicating that maintenance-of-way cars are causing accidents, injuries, and fatalities. However, FRA also recognizes

that good safety practice requires that some restrictions be placed on these cars. Accordingly, § 215.3(c)(3) of this final rule exempts maintenance-of-way cars from compliance with the new freight Car Safety Standards so long as those cars are not used in revenue service. A car in revenue service is one that is used to perform for-hire transportation services.

Definitions

Cracked and Broken

Under proposed § 215.5(b), "cracked" is defined, in pertinent part, as "broken or fractured without complete separation into parts."

Several commenters noted that including the word "broken" as one of the elements under the definition of "cracked" is confusing and seems to conflict with the definition of "break". One commenter suggested that the term "cracked" be defined as "fractured without complete separation into parts."

FRA agrees that the proposed definitions of "cracked" and "break" are confusing and has revised these definitions. In § 215.5 of the final rule, "cracked" is defined as "fractured without complete separation into parts" and "break" as "fractured with complete separation into parts."

Dedicated Service

Except for minor clarifying changes, the definition of "dedicated service" in proposed § 215.5(d) has been incorporated verbatim into § 215.5(d) of the final rule.

In Service

Proposed § 215.5(f) provides that a car is "in service" if it is on the property of a railroad, or within the control of a railroad, unless the car has "bad order" tags, is in a shop, or is on a repair track. Several commenters objected to this proposed definition. One commenter noted that Railroad A could be held responsible for a car in possession of Railroad B while it is on Railroad A's track under a trackage rights agreement or on a detour. Another felt the definition would only be acceptable if the safety standards were enforced in the same manner as the locomotive standards so that only those cars on an outbound track and those made ready for service would be considered to be "in service". Several commenters offered an alternative definition: A car should be considered to be "in service" only from the time it has been inspected and released for road movement until completion of road movement.

The RLEA supported the proposed FRA definition, stating that it would improve enforcement since it would no longer be necessary to wait until a defective car is coupled to the train.

Although FRA does not believe that the proposed definition of "in service" is unreasonable, it has revised the definition in the final rule in an effort to clarify the meaning of "in service". Section 215.5(e) of this final rule provides that a car is "in service" unless the car has "bad order" tags, is in a shop, is on a repair track, or is on a storage track and is empty. In this connection, it should be noted that the list of defective conditions in this final rule is limited to items, such as broken center plates and cracked wheels, that have been a cause of accidents, injuries, and fatalities. In light of the seriousness of these defects, railroads should regularly inspect their cars to determine whether any of these conditions is present. If a car has one or more of these defects, the car should be tagged for movement for repair or removed from service if it cannot be safely moved for repair. Thus, the definition of "in service" is intended to encourage the prompt discovery and repair or removal from service of unsafe cars before they cause an accident.

With respect to the comment regarding defective cars operated on the line of one railroad by another railroad under a trackage rights agreement, FRA would in such instances hold the railroad that operates the cars responsible under the Freight Car Safety Standards.

FRA does not agree that only cars on an outbound track and those made ready for service should be considered "in service". With the elimination of current requirements such as the periodic inspection, the periodic lubrication and repacking of bearings, and the reduction in the number of prohibited defects, FRA believes the railroads should focus their efforts on finding and repairing or removing from service all cars that have serious safety defects, regardless of where those cars may be situated.

Railroad

Proposed § 215.5(a) provides, in pertinent part, that a railroad includes any entity that "constructs, repairs, inspects, or otherwise maintains freight cars" subject to the proposed standards. This definition, as previously stated, includes any repair shop that performs periodic inspections. However, since the periodic inspection requirement is being eliminated, the definition of "railroad" has been revised. Section 215.5(f) of the final rule provides that a "railroad" is a common carrier by railroad.

Strict Liability

Under proposed § 215.7, a railroad would be subject to a penalty for failing to correct prohibited defects, regardless of whether it has knowledge of those defects. The main concern expressed by most railroads was that they felt it was unfair that they be held strictly liable for defects on cars over which they had never exercised control nor had an opportunity to inspect. They also contend that they should not be held strictly liable for undetected defects that develop during the course of their operations.

On the other hand, the Brotherhood of Railway Carmen asserted that strict liability is consistent with the legislative intent behind the 1970 Safety Act.

FRA does not agree with the railroads' contentions. First, as previously stated, a railroad would not be held responsible for defects on cars being operated over its track by another railroad. Second, the defects being retained in the final rule are particularly serious in nature so railroads should be continually on guard to discover these defects before they lead to serious accidents. This task should not be unreasonably burdensome in light of the numerous costly requirements that are being eliminated. Finally, FRA believes that if adequate pre-departure inspections are conducted and defective cars are tagged and repaired or removed from service, very few defects will occur during the conduct of normal operations. However, if these defects do develop during operations, a railroad can protect itself from liability by tagging the defective car and moving it for repair as prescribed in § 215.9 or removing it from service. Railroad inspection forces greatly outnumber the FRA and participating State inspectors engaged in monitoring railroad compliance with the Freight Car Safety Standards. If railroads effectively utilize their inspection forces, they are much more likely to find these defects before a Federal or State inspector would. Therefore, the strict liability provision has been retained in § 215.7 of the final rule.

Movement of Defective Cars for Repair

Proposed § 215.9 sets forth certain restrictions that would have to be observed when moving defective cars for repair. Among these restrictions are those requiring that a "bad order" tag describing each defect be attached to each side of the car and that defective cars discovered outside a yard be moved to the nearest point or the nearest forward repair point where repairs can be made. The restrictions on

movement of these cars would apply to any car having any defective component listed in proposed §§ 215.23 through 215.27.

Initially, it should be noted that Burlington Northern (BN) recommends that the word "terminal" be substituted for the word "yard." According to BN, the proposal is too restrictive and fails to take into account the fact that many railroad terminals have more than one yard. Surface Transportation International, Inc., specifically requested that FRA define the term "yard."

The railroads' comments emphasized that most of the current and proposed defective conditions on cars do not necessarily make them unsafe to move. They stated that their inspectors are qualified to make that judgment and to decide what restrictions should be imposed on the movement of defective cars.

The AAR submitted a list of defective conditions it considers to be critical from a safety standpoint and would preclude movement of cars with these defects. Included in this list were a missing lubricating pad in a plain bearing box; a defective plain bearing, plain bearing wedge, or roller bearing; and a broken roller bearing adapter. Several individual railroads concurred with this list.

According to commenter railroads, car owners, and private car companies, the nearest repair point is not always equipped to make specialized repairs. Consequently, temporary repairs would have to be made, only to be corrected at great expense at a major repair facility. Moreover, one railroad pointed out that tank cars can only be repaired at an AAR certified tank car repair facility.

Private car repair companies stated that they have made considerable capital investments at strategic locations and claim that there is a valid distinction between the kind and quality of work done at different facilities. One commenter noted that the proposed regulation could cause a sudden increase in volume of repair work that would exceed the capacity of repair facilities located on heavily trafficked corridors, while facilities elsewhere might have excess capacity.

On the other hand, the Brotherhood of Railway Carmen not only favored the proposed rules but wanted them strengthened. They stated that railroads should not be allowed to contract out their repair work to private shops which they contend have little knowledge of rail operations.

The RLEA recommended that, if a loaded car is moved, it should only be moved to the nearest point on the line of the handling railroad where repairs can be made in order to preclude interchange of defective cars.

As stated in the NPRM, FRA is concerned that cars tagged for repair may be moved considerable distances before needed repairs are made. However, FRA does not presently have data indicating that cars moved for repair have been a significant cause of accidents, injuries, and fatalities. Therefore, § 215.9 of this final rule does not adopt the proposed provisions that would have required that defective cars be repaired at the location where they are found to be defective or moved to the nearest point or the nearest forward point where needed repairs can be made. Rather, the final rule, like the current rule, prohibits movement of a defective car until a qualified person determines that it is safe to move the car and establishes the maximum speed and other restrictions necessary for safe movement. The addition of paragraph (c) to the final rule clarifies the scope of the movement for repair provision. The FRA is aware that the current section has been misconstrued to permit the use of defective cars in revenue service and movement of cars for repair by unnecessarily circuitous routes. This amendment makes it clear that a defective car may be moved only for the purpose of effecting repairs. Thus, if the car is empty it may not be placed for loading. A car which is already loaded when found defective may be placed for unloading prior to repair only if unloading is reasonably incidental to the movement for repair or the railroad finds that unloading is necessary for the safe repair of the car.

FRA believes that these conditions embody a balanced Federal approach that ensures the safe movement of defective cars without unduly restricting the railroads' choice of repair sites.

Since the proposed changes regarding "movement for repair" are not being adopted and the term "yard" has been deleted from the final rule, further discussion of the comments concerning the use of the term "yard" is not necessary.

Bad Order Tags

Some commenters stated that the proposal concerning bad order tags would create a hazard in that it would require inspectors to go between cars to attach the tag on both sides of the defective car. One commenter stressed that a single defect listed on the tag is sufficient to cause a car to be sent to the repair track. At that time, the car would be thoroughly inspected for other defects and all necessary repairs made.

In addition, Burlington Northern (BN) stated that applying the tag to both sides of the car would be too costly and would waste manpower, and that describing each defect on the card would be burdensome. BN further stated that it is necessary to tag one side of the car only, especially in light of industry use of computerized car movement records and surveillance.

Initially, it should be noted that the proposal to apply a "bad order" tag to each side of the car is identical to the rule currently in effect (§ 215.9(a)(3)). Moreover, FRA does not believe that this requirement is hazardous, costly, or burdensome, especially in light of the general industry practice to use a team of two persons to inspect trains. To expedite the inspection process, each person can inspect one side of the train. More importantly, a "bad order" tag is needed on each side of the car to ensure that its condition can later be identified from either side of the train. This, in turn, should help ensure that the car will be repaired as expeditiously as possible.

Section 215.9(a)(4) of the final rule adds a new requirement. It provides that upon request by a FRA or State inspector, a copy of the bad order tag shall be made available for inspection within 15 calendar days. The addition of this time limitation is intended to provide FRA with a mechanism to effectively monitor railroads' implementation of the movement for repair requirement.

Qualified Persons

The RLEA urged that only qualified persons designated under current § 215.15 should be permitted to determine whether a car is safe to move and allowed to remove bad order tags. It asserted that bad order tags are often removed even though the car has not been properly repaired. It recommended that persons removing tags improperly be personally fined.

Labor organizations also objected to the proposed deletion of current § 215.15 (qualified persons) for other reasons. They stated that, since FRA inspectors cannot be everywhere at all times, qualified railroad employees should be utilized as car inspectors. According to these commenters, a journeyman carman has the training and experience necessary to inspect freight cars. The Brotherhood of Railway Carmen noted that this had been worked out between railroads and labor organizations. Nevertheless, they contend that, in the absence of a qualified person requirement, railroads would use unqualified inspectors to inspect freight cars.

In response to the comments that the current rule regarding qualified persons (§ 215.15) should not be deleted, FRA

has decided to retain that rule (§ 215.11) in its current form. This decision is based on FRA's desire to encourage the use of qualified persons to inspect freight cars.

With respect to the comment that only qualified persons should be permitted to remove "bad order" tags, it should be noted that this requirement is currently in effect (§ 215.9(a)) and will be retained. FRA does not have legal authority to establish a regulation that would subject individual railroad officials or employees to fines for improperly removing a "bad order" tag. However, FRA notes that, if a tag is removed before the defective car is repaired, the railroad would be subject to a penalty for continuing in service a defective car.

Freight Car Components

Wear on Wheels

Under proposed § 215.23 (a) and (c), a car may not be continued in service if the flange of a wheel is worn to a thickness of ⅞ of an inch, or less, or if the rim of a wheel has a thickness of 1 1/16 of an inch, or less. Current § 215.43 (a) and (d) set minimum flange thickness at 15/16 of an inch and minimum rim thickness at ¾ of an inch. Thus, in the case of flanges and rims, the proposed standards would permit 1/16 of an inch of additional wear.

Several commenters opposed allowing this additional wear on flanges and rims. The Public Utility Commission of Oregon (Oregon Commission) and the Washington Utilities and Transportation Commission (Washington Commission) cited wheel failures as a significant cause of accidents. According to the National Transportation Safety Board (NTSB), there was no justification for the reduction in thickness on flanges and rims. It favors the current ¾ of an inch limit on rims. Another commenter objected to increased wear on wheel flanges contending that this would cause wheels to climb the rail. It was recommended that wear limits should be geared to the size of the wheel.

Conversely, the AAR and the railroads supported extension of wheel wear limits. They consider the current limits to be maintenance rather than safety limits. One railroad stated, in essence, that wheels would still be safe if worn beyond the proposed limits.

FRA does not agree with the commenters opposing the proposal to permit 1/16 of an inch additional wear on wheel flanges and rims. As stated in the NPRM, the former wear limits were developed at a time when cast iron wheels were in widespread use. Since that time, the introduction of steel wheels and improved manufacturing techniques have significantly improved the strength and durability of wheels. For these reasons, FRA believes that it is appropriate to permit the proposed increase in wear on wheel rims and flanges. It does not believe that these small increases will cause wheels to climb the rail or cause other problems. Accordingly, the wear limits set forth in the proposed rule have been incorporated in § 215.103 of the final rule. FRA emphasizes, however, that the new limits are absolute safety limits and will be rigidly enforced.

Cracked Wheels

NTSB notes that circumferential cracks in wheel plates would not be considered a defect under the proposed rule. It opposes this omission on grounds that any crack in a wheel plate can cause a wheel failure and lead to an accident. The Brotherhood of Railway Carmen took a similar position contending that any crack in a wheel indicates a weakness that could result in a wheel failure and a probable derailment.

On reconsideration, FRA agrees that any crack in a wheel could ultimately lead to a wheel failure. The structural integrity of a wheel is controlled by the compression and tension pattern set at the time of manufacture. The compression stress pattern of a wheel may be altered over time by braking and other force input. As a result of this change, a small crack may propagate rapidly and cause immediate danger to the structural integrity of the wheel.

Since there is no way to determine whether a small crack will or will not propagate to undermine the wheel, FRA is prohibiting use of a car with a wheel having a crack (§ 215.103(d)). This prohibition, however, does not extend to heat checks or chips in the tread area of the wheel. Heat checks or chips in the tread area generally do not indicate a weakness of the material that could result in a failure of the wheel. Consequently, they do not endanger the structural integrity of the wheel.

Overheated Wheels

Proposed § 215.23(i) provides that a car may not be continued in service if it has a wheel that "shows signs of being overheated as evidenced by a reddish brown discoloration, on the front or back face of the rim, that extends more than four inches into the plate area."

Several railroads objected to this proposed standard. It was recommended by one that the AAR rule on this subject should be adopted. Another commenter stressed that the proposed standard is inaccurate. According to that commenter, overheated wheels display a reddish discoloration on the plate and blue discoloration on the rim. Also, it was unclear to this commenter how the proposed 4 inch measurement would be made.

FRA does not agree that the proposed standards are inaccurate or that a reddish discoloration on the plate and a blue discoloration on the rim should be the standard for overheated wheels. FRA believes that such a discoloration standard would permit excessive heating of the wheel plates and unacceptable damage to the structural integrity of the wheels. Stated otherwise, such a discoloration standard would provide a significantly lower margin of safety. Wheel failures and derailments are imminent whenever wheels have been subjected to such excessive heating.

On the other hand, the proposed standard relies solely on reddish brown discoloration as the measure of overheating that could change the metallurgical structure of the wheel. As this discoloration extends further into the plate of the wheel, the danger of sudden wheel failure increases. Therefore, the proposed standard has been adopted in § 215.103(h) of the final rule.

The same rationale applies to that portion of the proposal that would not permit the discoloration to extend more than four inches into the wheel plate. Experience indicates that if the discoloration is permitted to extend beyond the limit proposed, failure of the wheel is imminent. Accordingly, § 215.104(h) of the final rule clarifies this portion of the proposal by specifying that the 4 inch measurement is to be made from the bottom of the back face of the rim.

Welding of Wheels

Under current § 215.43(m), any welding on a wheel is described as a defect. This provision was not included in the proposed standards. The Oregon Commission asserts that the welding of wheels should be prohibited. According to the Oregon Commission, a careless arc strike could pit the bearings and lead to a wheel failure.

While FRA agrees that improper or careless welding could lead to serious wheel damage, it notes that welding, if done properly, would not result in such damage. However, FRA also recognizes that creation of proper welding conditions in the railroad operating environment would be so inordinately expensive that it is impractical. A large part of that expense would derive from the process of preheating the wheel, a lengthy but necessary process for proper

welding. For this reason, FRA will allow welding of wheels only as an emergency repair measure to enable the car to be moved to a repair facility. Accordingly, under § 215.103(i) of the final rule, a welded wheel is not a prohibited defect if the car is tagged and being moved for repair in accordance with § 215.9.

Circumferential Grooves

Current § 215.43(j) provides that a wheel is defective if it has "[a] circumferential groove in the tread more than one-eighth inch in depth." This provision was not included in the proposed standards.

The Oregon Commission states that the standards should indicate at what point a circumferential groove becomes a hazard. Similarly, the Washington Commission opposes deletion of the current rule prohibiting a circumferential groove ⅛ of an inch in depth or more. It states that deletion of this standard could lead to a reduction in the structural integrity of wheels. Both indicate that these grooves are prevalent on cars equipped with composition brake shoes.

FRA does not agree with the commenters contending that a wheel with a circumferential groove should be prohibited. Unlike other conditions, FRA does not believe that these grooves are serious enough to justify removing a car from service. Moreover, the accident data compiled by FRA does not indicate that wheels with circumferential grooves are a safety problem.

Wheels with Scrapes, Dents, or Gouges

Under current § 215.43(k), a wheel is defective if it has "[a] scrape, dent, or gouge in the wheel plate surface more than one-eighth inch deep that causes an abrupt change in the finish of the plate surface." This provision was also omitted from the proposed standards.

The Washington Commission opposes, on grounds of structural soundness, the elimination of the current prohibition of wheels with a scrape, dent, or gouge. Moreover, the Oregon Commission asserts that the standards should specify at what point these conditions will render the wheel structure unsound.

As previously noted, the proposed rules, unlike the current rules, do not provide that a wheel is defective if it has a scrape, dent, or gouge in the plate area. These conditions were not included in the proposed rules because they are extremely difficult to discover during a pre-departure inspection. No defects of this nature were reported by FRA and participating State inspectors during the past three years. Accordingly, FRA has omitted these conditions from the final rule.

Axles

The NTSB expressed opposition to proposed § 215.25 (a), which provides that a car may not be continued in service if an axle on the car has a radial crack or is broken. NTSB contends that axles normally crack in a transverse, rather than a radial, manner.

FRA agrees. Moreover, the term "radial crack" has generated considerable confusion among the commenters. Accordingly, FRA has revised the proposed rules pertaining to axles to provide that an axle with any crack is defective. Thus, with respect to cracked axles, § 215.105 of the final rule will be identical to the current rule.

Plain Bearing Box Lids

Under proposed § 215.27(b), a railroad may not continue in service a car with a plain bearing box lid that is missing, broken, or otherwise not preventing contaminants from entering the box.

Maine Central Railroad opposes this prohibition to the extent that it applies to a box lid that is "not preventing contaminants from entering the box." It contends that this standard is too vague since the seal between the box lid and the journal box at no time can be made perfect, particularly if the journal box lid is not equipped with a seal.

As noted by one commenter, the proposed rules would require that a car be removed from service if it has a plain bearing box lid that does not prevent contaminants from entering the box.

The confusion concerning this proposed requirement derives from both FRA's use of the term contaminant and its failure to make clear the intent of the proposal. Accordingly, the term contaminant has been deleted from the final rule. In addition, proposed § 215.27(b) has been revised and redesignated as § 215.107(b) of the final rule. It provides that a railroad may not place or continue in service a car with a plain bearing box lid that is missing, broken, or open except to receive servicing. The intent of the proposal was not to require a perfect seal between the lid and the journal box. Rather, it was to ensure that the lid would be in place and secure enough to prevent free entry of foreign matter that could damage the bearings and lead to a "hot box" that could ultimately result in a derailment. FRA believes that the clarified plain bearing box lid requirement in § 215.107(c) of the final rule is both reasonable and necessary to assure safety.

Repack and Lubrication of Bearings

Current §§ 215.97 and 215.99 require periodic repacking of plain bearing boxes and periodic lubrication of roller bearings. These requirements were not included within the proposed standards.

Several commenters favored retention of the current provision requiring a periodic lubrication of roller bearings. Also, the Lubricator Pad Manufacturers Group felt that the current 24-month repack requirement for plain bearing boxes is the most satisfactory. It expressed concern that the industry would not be able to enforce the maintenance required for good solid bearing performance and that an increase in hot boxes and derailments would result.

In addition, the Alabama Public Service Commission favors retention of the current repack intervals for plain bearing boxes. The Commission explains that components in the journal box need to be removed for adequate inspection.

FRA does not agree that these requirements should be retained. Field test results indicate that roller bearings can remain in service for extended periods of time without being re-lubricated. At the same time, it should be noted that roller bearings will be indirectly regulated as a result of the rules prescribing wear limits for wheels. Specifically, when wheels reach condemning limits, they will have to be removed. At this time, the bearings can be examined for defects and, if necessary, removed from service. In sum, FRA believes that the bearings will function properly for the life of the wheel without additional lubrication. Accordingly, the current requirement is being deleted from the standards.

With respect to plain bearings, FRA is shifting from an arbitrary requirement to repack the bearing box to performance standards. Under the new standards (§§ 215.107–111), critical bearing components are required to be in good condition. For example, the box must contain free oil and be free of excessive foreign matter, and the lubricating pad must be in proper condition. These and other related requirements make the current repack requirement unnecessary from the standpoint of safety. In fact, FRA believes that the new performance standards are superior to the current repack requirement because they stress that the critical bearing components must be in good condition at all times. Accordingly, the current repack requirement is not being retained.

Plain Bearing Wedge

The Oregon Commission states that a car should not be continued in service if it has a plain bearing wedge that is out of place.

FRA agrees with the Oregon Commission. If a car with a plain bearing wedge out of place is continued in service, uneven load distribution in the contact area between the bearing and journal box will result, thus creating the risk of overheating that could cause a derailment. For these reasons, § 215.113 of the final rule requires removal of a car from service with a plain bearing wedge out of place.

Roller Bearings

Proposed § 215.35(a)(3) provides that a railroad may not continue in service a car that has a roller bearing with a loose, damaged, or nonfunctioning seal that permits loss of lubricant. Maine Central opposes the prohibition of roller bearings with a "nonfunctioning seal that permits loss of lubricant." It asserts that a minimal loss of lubricant does not indicate unsafe conditions. It favors using AAR Interchange Rule 36, which deals with unsafe seal conditions, as a standard.

While a minute loss of lubricant through "seepage or weepage" of lubricant around a roller bearing seal may not be hazardous, FRA notes that proposed § 215.35(a)(3) provides that the seal must be "loose, damaged, or nonfunctioning" to be considered defective. If any of these conditions exists, FRA believes that the loss of lubricant would be excessive and warrant taking a car out of service. Accordingly, the proposed rule has been adopted, with only a minor editorial change, in § 215.115(a)(3) of the final rule. The phrase, "nonfunctioning seal that permits loss of lubricant," has been revised to read a seal that "permits leakage of lubricant in clearly formed droplets."

Derailed or Submerged Bearings

Proposed § 215.35(b)(2) provides, in pertinent part, that "[e]ach roller bearing that has been submerged in water, and each roller bearing involved in a derailment, must be disassembled from the axle for inspection."

Western Pacific Railroad Company objected to the proposed test procedure for these bearings. Western Pacific contends that the proper procedure is to jack up the truck side frame, rotate the bearing, and listen and feel for irregularities. The Santa Fe stated that defective bearings have externally visible defects. It also opposes the proposed standard. Rather, it supports AAR Rule 36 A.1 (June 1, 1978).

These commenters apparently believed that defects can be discovered without disassembly of the bearing from the axle. FRA does not agree entirely. Although the initial procedure for low speed (10 miles per hour or less) derailed bearings is a visual examination of the bearings and rotation of the wheel set, disassembly should be required if this procedure reveals any irregularity, such as evidence of damage or unusual noise.

FRA believes that each wheel set of a truck involved in a higher speed (more than 10 miles per hour) derailment, or dragged on the ground for more than 200 feet should also be disassembled. Defects caused by these derailments cannot be discovered without disassembly of the bearing from the axle. Otherwise, internal fractures of the rollers and racers, or any other serious internal damage to the bearings cannot be detected. Also, bearings should be disassembled to detect pitting which could lead to cracking and ultimate failure of the bearings. For these reasons, the "disassembly" requirement for derailed bearings is being retained in § 215.115(b) of the final rule.

On further consideration, FRA has decided not to regulate roller bearings that have been submerged in water because it does not have data to indicate that submerged bearings deteriorate to the point where their functional integrity is adversely affected.

More than two years ago, 4,800 Norfolk and Western (N&W) cars were submerged in approximately fourteen feet of water for several days. N&W operated about 2,300 of those cars during the last two years, while gradually replacing their bearings. Specifically, the bearings of approximately 800 cars were changed during the first nine months and the bearings of the remaining 1,500 cars were changed during the next fifteen months. Thus, some cars were operated for as long as two years before receiving a bearing change. None of the bearings on 2,300 cars failed nor showed signs of deterioration, although some did have water marks or etchings or other minor imperfections. While this one case does not conclusively establish that water has no deteriorative effect on roller bearings, it does reveal that further observation is necessary before FRA can determine whether or not submerged bearings present a safety hazard. Therefore, FRA has not included submerged bearings in the final rule. However, FRA will continue to monitor the safety performance of submerged bearings.

Roller Bearing Adapter

The Oregon Commission opposes continuing a car in service with a roller bearing adapter that is out of place or wearing into a truck side frame.

The Washington Commission supports a prohibition against use of cars with roller bearing adapters out of place. It also favors a prohibition against excessive wear on the crown of the adapter. Such a prohibition is contained in § 215.95(c) of the current rules but was omitted from the proposed rules. In support of its position, the Commission notes that six percent of all derailments reported were caused by journal bearing failures.

FRA agrees that a car should be removed from service if it has a roller bearing adapter that is out of place. Also, excessive wear on the crown of the adapter is serious enough to warrant taking a car out of service. Either condition could cause uneven load distribution on the bearing and thus result in bearing failure, which could lead to a derailment. Therefore, § 215.117 of the final rule requires removal from service of a car that has either a roller bearing adapter that is out of place or excessive wear on the crown of the adapter.

Snubbing Devices

Proposed § 215.39(b) provides that a railroad may not continue in service a car that has a truck equipped with snubbing units, attachments, or wear plates that are worn to the extent that the snubbing is ineffective or contains snubbing units that are broken.

Trailer Train disagreed with the inclusion of snubbing ineffectiveness as a critical defect. Pullman Leasing Company noted that measurable wear limits based on safety should be used rather than the vague term "ineffective."

With respect to reconditioned cars, Pullman notes that proposed § 215.71(b)(7)(ii) would require that those cars have hydraulic snubbing units that are free of defects, including leakage of hydraulic fluid. It asserts that leakage does not necessarily make a snubbing unit defective. As a substitute for this leakage test, it recommends a standard requiring observation of the fluid level or qualification testing in accordance with the manufacturer's recommended procedures.

Initially, it should be noted that the terms snubbing units, attachments, and wear plates, where used collectively, have been consolidated into one term, snubbing device. With regard to leakage, FRA feels that leakage of

snubbing devices is not hazardous so long as that leakage is not so excessive that it will render the device inoperative. Thus, a leaking snubbing device is not considered to be defective if that leakage does not amount to clearly formed droplets.

On the other hand, FRA disagrees with a commenter's contention that ineffective snubbing should not be considered a critical defect. A car that has ineffective snubbing, or broken snubbing devices, will respond more violently to track irregularities and may cause a derailment. Therefore, § 215.119(b) of the final rule does not permit a car to be continued in service if it has ineffective or broken snubbing devices.

Broken Body Bolster

The Oregon Commission recommends that a car should be taken out of service if the bolster is broken so badly that there is no side bearing clearance or the bolster is broken down to the point where the side sill of the car is riding on top of the truck side frame. This position was echoed by the Washington Commission.

FRA agrees with these comments. Accordingly, § 215.121(f) prohibits broken body bolsters.

Side Bearings

Proposed § 215.39(c) provides that a railroad may not continue in service a car having side bearings in any of the following conditions: (1) A car truck side bearing assembly is missing or broken; (2) The bearing at one end of the car, on both sides, is in contact with the body bolster (except by design); (3) The bearing at one end of the car has a total clearance from the body bolster of more than three-fourths of an inch; or (4) At diagonally opposite sides of the car, the bearings have a total clearance from the body bolsters of more than three-fourths of an inch.

The Oregon Commission asserts that loose side bearings are a serious enough defect to warrant taking a car out of service. In addition, the Washington Commission contends that a car should not be used if it has a side bearing that is missing, broken, or insecure.

FRA agrees that a missing or broken side bearing is serious enough to warrant taking a car out of service. FRA's concurrence stems from the knowledge that a missing or broken side bearing generates an uneven load distribution in the suspension system that could shift the lading. This in turn would cause the car to sway and derail. As previously noted, § 215.39(c) of the proposed rules would require cars with this defect to be removed from service. Accordingly, this requirement has been included, with editorial changes, in § 215.119(c) of the final rule.

On the other hand, FRA has not included a provision that would prohibit the use of a car with loose side bearings. There is no indication that loose side bearings pose the same risk occasioned by missing or broken side bearings. Moreover, such a requirement would not be realistic in light of the fact that the bearings are attached from inside and if loose would not be apparent to railroad personnel or FRA or State inspectors.

Truck Springs

Under proposed § 215.39(d)(3), one broken truck spring is not a defect. One labor organization asserted that one broken truck spring constitutes a safety hazard because it would put an abnormal load on the other springs.

FRA does not agree. One broken truck spring in a cluster does not create enough of an uneven load distribution to warrant removal of a car from service. Therefore, under § 215.119(d) of the final rule, a car would have to be removed from service if it has more than one broken truck spring within any cluster.

Center Sills

Under proposed § 215.41(b)(2), a railroad may not place or continue in service a car having a cracked center sill.

The AAR, NTSB and other commenters contend that cracked center sills are not critical, though broken ones could be.

FRA does not entirely agree. FRA believes that a center sill that is cracked more than 6 inches is hazardous because it may undermine the integrity of the sill or propagate rapidly and thus result in a break. Likewise, FRA believes that a broken center sill is hazardous and warrants removal of a car from service. Both of these conditions create the danger of train separation. Therefore, § 215.121(b) of the final rule prohibits continuing a car in service if that car has a center sill that is broken or cracked more than 6 inches.

Brake Hangers

The Public Service Commission of West Virginia (West Virginia Commission) contends that broken or missing hangers or pins should be regulated in Part 215 since brake hangers and safety supports are part of the trucks.

FRA currently is developing a notice of proposed rulemaking to revise its Power Brake Standards. As part of this process, it will consider brake hangers and pins. Therefore, the comment on this subject will be retained and considered in connection with the revised Power Brake Standards.

Safety Hangers for Car Doors

AAR requested a six-month extension to permit the railroads to comply with proposed § 215.41(d), which would require that the side doors on box cars be equipped with safety hangers.

FRA believes that this request is reasonable. Therefore, § 215.121(d) of the final rule provides this extension.

Center Plates

The West Virginia Commission urges the prohibition of broken center plates stating that a broken plate puts stress on the body bolster and will eventually cause the car to ride hard on the side bearings.

FRA agrees with the West Virginia Commission that broken center plates should be included in the listing of prohibited conditions. If a car with a broken center plate is continued in service, the truck could easily become disengaged from the body and cause a serious accident. Accordingly, § 215.121(e)(3) of the final rule provides that a car may not be placed or continued in service if it has a broken center plate.

Further, it is the view of FRA that certain cracked center plates should also be included in the listing of prohibited conditions. It is difficult to accurately determine whether or not these cracks will spread to result in a break. Thus, these cracked center plates pose potentially the same risk as broken ones. Therefore, § 215.21(e)(4) of the final rule prohibits placing or continuing in service a car with a center plate that has two or more cracks through its cross section (thickness) at the edge of the plate that extend to the portion of the plate that is obstructed from view while the truck is in place.

Couplers

The West Virginia Commission favors prohibiting use of a car with a missing or broken coupler lock-lift. It asserts that this condition is hazardous since, if present, it would require workers to cross between cars to uncouple them. Further, it asserts that for the same reason a car should not be used if an uncoupling device is missing.

The Oregon Commission favors removing a car from service if it has any defective coupler, including a defective Type E coupler. The Commission notes that DOT Specification 112 and 114 tank cars that carry hazardous materials are required to be equipped with shelf Type E couplers and head shields. The Type E couplers and head shields on these cars are designed to help prevent hazardous

materials accidents. The Oregon Commission and the Washington Commission also favor a standard providing that a car must be taken out of service if it has a cracked, broken, or inoperative coupler lock-lift.

Additionally, the Washington Commmission opposes use of a car having an AAR adopted coupler carrier that is missing or broken. Like the Oregon Commission, the Washington Commission notes that the proposed rule applies to Type F couplers only.

RLEA favors retention of the current requirement regarding excessive wear and defective interlocking features on couplers. According to RLEA, these defects could lead to coupler disengagement while a train is in transit.

On reconsideration, FRA generally agrees with the comments favoring removal of a car from service if it has a defective coupler lock-lift or a missing uncoupling device. Thus, it is incorporating into the new standards (§ 215.123) the provisions of current § 215.173(c). Under the terms of that section, a coupler is considered defective if it has an inoperative lock-lift, the assembly lacks anticreep protection, or a coupler lock is missing, inoperative, bent, cracked, or broken. The anticreep protection should be capable of preventing unintentional unlocking of the coupler lock; this requirement replaces the current one that provides that the lever on a bottom operated coupler must have at least one-fourth inch clearance between the operating rod eye and the locklift lever when the coupler is centered and the knuckle is fully closed and locked. Also, if a coupler lock is missing or defective, the coupler will not lock. These defects are considered serious enough to warrant their insertion in the final rule.

With regard to the comments supporting removal of a car from service if it has a defective Type E coupler, FRA notes that proposed § 215.43 (defective couplers) applies to all couplers and does not distinguish between Type E and Type F couplers. This section has been incorporated into § 215.123 of the final rule with the additional provisions that are discussed above.

Follower Plates and Draft Lugs

Current § 215.193 provides, in pertinent part, that a draft arrangement is defective if it has a missing (except by design) or broken follower plate, draft lugs or fasteners. This provision is not included in proposed § 215.47 (defective draft arrangement).

The Oregon & Washington Commissions contend that a car should be taken out of service if it has a missing (except by design) or broken follower plate, draft lugs or fasteners.

FRA agrees that these conditions are serious enough to warrant regulation. Since these components contribute significantly to the structural integrity of the draft system, the absence or break of any one part could cause a train to break in two while in motion. Accordingly, FRA has incorporated into § 215.127 of the final rule the applicable provisions of current § 215.127 of the final rule the applicable provisions of current § 215.193 that prohibit these defects.

Inoperative Sliding Sill

Under proposed § 215.47(c), a railroad may not continue in service a car having a sliding sill that is inoperative.

Maine Central Railroad believes that a car with a properly blocked sliding sill should be permitted to move to the home shop for repair. Because of varying designs of cushioning units not every repair point can be equipped to make permanent repairs to all cars.

FRA agrees that a car with a properly blocked sliding sill should be permitted to be moved for repair. In this connenction, it points out that, under § 215.9 of the final rule (movement for repair), a car with a defective sliding sill, or any other defect, can be moved only for repair if a qualified person finds that it can be safely moved, establishes the restrictions to ensure a safe movement, and the other requirements prescribed in that section are complied with.

Cushioning Units

Under proposed §§ 215.63 and 215.71, cushioning units would be considered defective if leaking oil or other fluid.

Hydraulic unit manufacturers disagreed with this proposed standard. They stressed that some leakage is inevitable. One commenter urged that the term "leakage" be omitted. Another commenter suggested that the term "leakage" be clarified by defining it as "clearly formed droplets adhering to or dropping from the cushioning unit or the car structure surrounding the cushioning unit." This would prevent grease from being mistaken as oil.

With respect to cushioning units, Maine Central pointed out that by design a small amount of seepage is allowed for lubrication of the seal and does not render the unit inoperative or unsafe. Also, Maine Central asserts that a car with an inoperative cushioning unit should be allowed to move to the home shop for repair if the unit is properly immobilized.

On reconsideration, FRA agrees that a cushioning unit should not be considered defective if it is losing only a minute amount of fluid through "seepage or weepage". FRA is primarily concerned about an excessive loss of fluid that could render the cushioning unit inoperative. This condition can lead to violent slack action in trains that could cause serious injuries and derailments. Accordingly, to guard against this hazard while at the same time recognizing that a negligible loss of fluid may be inevitable, § 215.127(c) of the final rule provides that a leaking cushioning unit is defective if it is leaking fluid in clearly formed droplets. Thus, a minute loss of fluid through "seepage or weepage" would be permitted, but a larger loss of fluid that could render the unit inoperative would not be allowed.

Regarding movement for repair with an inoperative cushioning unit, again, FRA notes that this practice would be permitted, if it is determined that the movement can be conducted safely and the other conditions in § 215.9 of the final rule are met.

Draft Gear

The West Virginia Commission urges that a draft gear with the support missing or not secured should be prohibited. The Commission pointed out that when the support fails (drops off), the coupler height changes and the draft gear could fall out of the yoke.

On the other hand, the AAR, NTSB and other commenters, contend that free slack in the draft gear is not an unsafe condition.

With regard to the comment that a car should be taken out of service if it has a draft gear that is not secured or is missing support, FRA generally agrees. The draft arrangement regulates the functional integrity of the draft system. A defective draft arrangement could cause the draft system to malfunction which, in turn, could result in the train breaking in two.

FRA also agrees that free slack in a draft gear does not constitute an imminent safety hazard. Unlike a draft gear that is not secured or is missing support, free slack in a draft gear does not create an imminent danger of train separation. Therefore, FRA has included in § 215.127 of this final rule, a provision requiring that a car be taken out of service if it has a defective draft arrangement including a broken yoke, a missing or broken follower plate, or an inoperable draft gear.

Prohibited and Restricted Equipment

Subpart C is being revised in the final rule. The two lists of components and other factors that preclude a freight car from being used without prior FRA

approval are being consolidated into a single list. In addition, the one-wear, 70-ton Southern (ABEX) U1 cast steel wheels that were ordered removed from all cars by FRA Emergency Order No. 7 have been added to the list of restricted components. Finally, some of the procedural and policy guidelines governing requests for FRA approval have been deleted as surplusage since they are also contained in the FRA Rules of Practice (49 CFR Part 211).

Civil Penalty Policy

FRA announced in the preamble accompanying the proposed standards that the final rule would include a revised penalty schedule equating the amount of penalties to be assessed with the nature and degree of violations.

Several commenters suggested that fines currently being assessed should be lessened. Others approved of having the amount of the penalty reflect the seriousness of the violation. Rail unions stated that larger fines should be imposed to encourage compliance with the new standards. According to the unions, the railroads simply write off the current fines as an operating expense.

Regarding the amount of fines assessed, FRA wishes to point out that its discretion is limited by the provisions of the Federal Railroad Safety Act, as amended. Section 209 of the Act (45 U.S.C. 438) provides that penalties for violations of rules and regulations shall be not less than $250 or more than $2,500.

The purpose of civil penalties is to promote future compliance with the regulations. Existing penalty levels under the standards replaced by this final rule have proven inadequate to produce significant impacts on the compliance records of many railroads. Further, because FRA can discover and process only a small fraction of all violations that occur, it is important that penalties actually assessed be substantial. Finally, the defects defined in the rule are all of a serious nature, while some of the defects under the current regulations involve the failure to undertake preventive maintenance.

Therefore, Appendix B of the final rule prescribes substantial penalties for violations of the standards. Where gradations of noncompliance could be described in objective terms, appropriate distinctions have been made in the penalty levels. In general, the highest penalties have been reserved for conditions which have contributed significantly to the train accident rate and for conditions which, although infrequent in incidence, clearly present a high probability of derailment.

The railroads exercise control over the level of compliance with freight car safety standards through their determination of repair points, deployment of car inspectors, and management of car rehabilitation programs. Under these circumstances, basing a violation on knowledge of the defective condition encourages ignorance and neglect. It is FRA's experience that the knowledge requirement (§ 215.7) of the current standards has had that effect. Thus, it has been necessary to adopt a rule of strict liability for violations of the revised standards.

Moreover, higher penalties are provided where the circumstances indicate violations to be intentional. An intentional violation is the knowing and willful failure of a railroad to comply with the provisions of this final rule. The knowledge required for an intentional violation is knowledge of the facts constituting the violation. Knowledge of the regulations is presumed by law. There are two instances that are *prima facie* evidence that a violation was knowing and willfull: first, evidence that a violation has been committed or has been allowed to continue after an FRA or State inspector has provided the railroad notification of a deviation from the requirements of the standards; and second, where any repair has been made to the freight car component in question, but that component was not brought into full compliance with the standards.

Under the penalty schedule, the freight car (as opposed to individual deviations from the standards of individual components of the car) remains the essential unit of violation. However, the schedule provides that the penalties associated with individual deviations from the standards will be combined up to a total of $2,500 if two or more violative conditions are detected on a single car.

FRA will assess civil penalties whenever a freight car is found to have been utilized in a way giving rise to a hazard proscribed by the standards or whenever the circumstances point to the likelihood that a car would be so utilized, absent FRA intervention. For instance, FRA will not hesitate to assess violations for excessively worn wheels discovered in inbound trains. The final rule allows sufficient wear beyond AAR condemning limits for the wheels to be removed before they become defective under the standards. Similarly, FRA will not hesitate to assess violations with respect to defective cars returned to service after having been on a repair track. Even if a particular defect is of the kind not likely to cause a derailment in a low-speed yard movement, FRA will assess a penalty based on the likelihood that a defect not discovered on a repair track is even less likely to be discovered in a pre-departure inspection.

In contrast to past custom, FRA will also assess penalties for defective cars in any outbound train that is prepared for departure. FRA (or the participating State) will then provide notification of the proposed penalty action and relevant car numbers to the railroad as soon after completion of the FRA inspection as a railroad representative can be located. Merely providing the car numbers to the railroad without assessing penalties would transform FRA and State inspectors into servants of the railroads. On the other hand, permitting the trains to run with defective cars, while a practice endorsed by the courts as a necessary measure under other statutes, would expose the public to hazard unnecessarily. Thus, FRA will penalize defects before they give rise to actual injury.

It should be emphasized that the above examples are not exhaustive of the situations in which civil penalty action may be appropriate. FRA expects that the railroads, having been relieved of unnecessary regulatory burdens, will take whatever action may be necessary to prevent the development of avoidable defects and to timely discover the presence of those that may be unavoidable.

Defect Code

FRA has included in Appendix C of this final rule a freight car defect code. The code number generally corresponds to the section number of each defect proscribed by the final rule. The purpose of this code is to establish a universal language among FRA, States, and the railroad industry that will facilitate communication, recordkeeping, and statistical analyses. Railroad personnel should note that the code may not be substituted for the description of defects on bad order tags affixed to cars being moved for repair under § 215.9. However, it may be used to supplement that description.

Reporting Safety Violations

The Brotherhood of Railway Carmen asserts that supervisors threaten employees with dismissal when the latter attempt to comply with the existing standards. It favors development of a means for employees to report safety violations to FRA without fear of dismissal. Also, it contends that employees should be permitted to refuse to operate unsafe

equipment without having to worry about loss of their jobs.

First, FRA wishes to point out that, on numerous occasions in the past, it has received reports of alleged safety violations from railroad employees. FRA has treated these complaints in strictest confidence and will continue to do so. However, FRA believes that the establishment of a formal procedure to protect employees reporting alleged violations, or permit employees to refuse to operate allegedly unsafe equipment, would result in FRA's becoming involved in numerous labor-management disputes. FRA believes that these disputes should be resolved by the collective bargaining process.

Caboose Crashworthiness

In the preamble accompanying the proposed Freight Car Safety Standards, FRA announced that it is considering crashworthiness standards aimed at upgrading the structural integrity of new caboose cars. Reacting to this approach, several commenters suggested that the way to lessen the possibility of injuries sustained while in a caboose is either to have the caboose at the middle of the train or to eliminate it entirely.

FRA is presently conducting tests at its test center in Pueblo, Colorado to determine whether it would be appropriate to propose standards for the crashworthiness of cabooses. Once all the test data have been collected and analyzed, a decision regarding the need for rulemaking will be made. Therefore, FRA believes that it would be premature to discuss possible crashworthiness standards at this time. However, the comments submitted concerning this topic will be retained and considered in connection with any future rulemaking action that may be taken.

Comments Beyond Scope of Notice

Several parties submitted comments that are considered beyond the scope of the notice of proposed Freight Car Safety Standards. These included comments concerning performance, design, and construction standards for freight cars, an on-board monitoring system for bearings, and standards regulating the loading of open-top freight cars.

These comments and others considered beyond the scope of the notice will be retained and considered, to the extent applicable, in connection with future rulemaking proceedings.

Economic Impact

FRA has determined that this document does not contain a significant regulation. Therefore, a Regulatory Analysis under Executive Order 12044 is not required (E. O. 12044, 43 FR 12661, March 24, 1978).

However, FRA did prepare a regulatory evaluation of the proposed regulation and has revised that evaluation in light of the comments received and the changes made in the final rule, in accordance with DOT policies for evaluation of regulatory impacts (Regulatory Policies and Procedures, 44 FR 11034, February 26, 1979). A copy of each regulatory evaluation has been placed in the public docket for this proceeding.

Environmental Impact

On March 16, 1979, the FRA published (44 FR 16062) revised procedures for insuring full consideration of the environmental impacts of FRA actions as required by the National Environmental Policy Act ("NEPA", 42 U.S.C. 4321 *et seq.*), the Department of Transportation Act ("DOT Act", 49 U.S.C. 1651 *et seq.*), other environmental statutes, executive orders, and DOT Order 5610.113.

These FRA procedures require that an "environmental assessment" be performed prior to all major FRA actions. The procedures contain a provision that enumerates seven criteria which, if met, demonstrate that a particular action is not a "major" action for environmental purposes. These criteria involve diverse factors, including environmental controversiality; the availability of adequate relocation housing; the possible inconsistency of the action with Federal, State, or local law; the possible adverse impact on natural, cultural, recreational, or scenic environments; the use of properties covered by Section 4(f) of the DOT Act; and the possible increase in traffic congestion.

This amendment meets the seven criteria that establish an action as a non-major action. Accordingly, the FRA has determined that the amendment of Part 215, Freight Car Safety Standards, does not constitute a major action requiring an environmental assessment.

Effective Date

As stated at the beginning of this preamble, with the exception of § 215.15, this final rule becomes effective on March 1, 1980. However, to the extent that the final rule imposes new or more stringent requirements than the current standards, prior compliance is authorized and encouraged.

Section 215.15, the periodic inspection requirement, is effective immediately upon publication in the Federal Register. This section extends the deadline for accomplishing initial periodic inspections of freight cars from December 31, 1979 to June 30, 1980. This action is being taken to avoid the hiatus between the current and new deadline that would otherwise occur. Thus, this action protects railroads against the possibility of penalty for those cars that have not received periodic inspections as of December 31.

This action imposes no additional regulatory burden and is being accomplished solely to respond to the problem being encountered by various railroads in completing the inspection program within the time constraint of the current regulatory provision. Therefore, § 215.15 is not subject to the thirty day notice requirement and is effective immediately upon publication.

In consideration of the foregoing, Part 215 (49 CFR Part 215) is revised to read as follows:

PART 215—RAILROAD FREIGHT CAR SAFETY STANDARDS

Subpart A—General

Sec.
215.1 Scope of part.
215.3 Application.
215.5 Definitions.
215.7 Prohibited acts.
215.9 Movement of defective cars for repair.
215.11 Designation of qualified persons.
215.13 Predeparture inspection.
215.15 Periodic inspection.

Subpart B—Freight Car Components

215.101 Scope.

Suspension System

215.103 Defective wheel.
215.105 Defective axle.
215.107 Defective plain bearing box: general.
215.109 Defective plain bearing box: journal lubrication system.
215.111 Defective plain bearing.
215.113 Defective plain bearing wedge.
215.115 Defective roller bearing.
215.117 Defective roller bearing adapter.
215.119 Defective freight car truck.

Car Bodies

215.121 Defective car body.

Draft System

215.123 Defective couplers.
215.125 Defective uncoupling device.
215.127 Defective draft arrangement.
215.129 Defective cushioning device.

Subpart C—Restricted Equipment

215.201 Scope.
215.203 Restricted cars.

Subpart D—Stenciling

215.301 General.
215.303 Stenciling of restricted cars.
215.305 Stenciling of maintenance-of-way equipment.

Appendices

Appendix A—Railroad freight car components.

Appendix B—Schedule of civil penalties.
Appendix C—FRA freight car standards defect code.

Authority: Secs. 202 and 209, 84 Stat. 971 and 975, 45 U.S.C. 431 and 438; and Sec. 1.49(n) of the regulations of the Office of the Secretary of Transportation, 49 CFR 1.49(n).

Subpart A—General

§ 215.1 Scope of part.

This part prescribes minimum Federal safety standards for railroad freight cars.

§ 215.3 Application.

(a) Except as provided in paragraphs (b) and (c) of this section, this part applies to each railroad freight car in service on—

(1) Standard gage track of a railroad; or

(2) Any other standard gage track while the car is being operated by, or is otherwise under the control of, a railroad.

(b) Sections 215.15 and 215.303 of this part do not apply to any car—

(1) Owned by a Canadian or Mexican Railroad; and

(2) Having a Canadian or Mexican reporting mark and car number.

(c) This part does not apply to a railroad freight car that is—

(1) Operated solely on track inside an industrial or other non-railroad installation; or

(2) Used exclusively in dedicated service as defined in § 215.5(d) of this part; or

(3) Maintenance-of-way equipment (including self-propelled maintenance-of-way equipment) if that equipment is not used in revenue service and is stenciled in accordance with § 215.305 of this part.

§ 215.5 Definitions.

As used in this part—

(a) "Break" means a fracture resulting in complete separation into parts;

(b) "Cracked" means fractured without complete separation into parts, except that castings with shrinkage cracks or hot tears that do not significantly diminish the strength of the member are not considered to be "cracked";

(c) "Railroad freight car" means a car designed to carry freight, or railroad personnel, by rail and includes a—

(1) Box car;
(2) Refrigerator car;
(3) Ventilator car;
(4) Stock car;
(5) Gondola car;
(6) Hopper car;
(7) Flat car;
(8) Special car;
(9) Caboose car;
(10) Tank car; and
(11) Yard car.

(d) "Dedicated Service" means the exclusive assignment of cars to the transportation of freight between specified points under the following conditions:

(1) The cars are operated—

(i) Primarily on track that is inside an industrial or other non-railroad installation; and

(ii) Only occasionally over track of a railroad;

(2) The cars are not operated—

(i) At speeds of more than 15 miles per hour; and

(ii) Over track of a railroad—

(A) For more than 30 miles in one direction; or

(B) On a round trip of more than 60 miles;

(3) The cars are not freely interchanged among railroads;

(4) The words "Dedicated Service" are stenciled, or otherwise displayed, in clearly legible letters on each side of the car body;

(5) The cars have been examined and found safe to operate in dedicated service; and

(6) The railroad must—

(i) Notify the FRA in writing that the cars are to be operated in dedicated service;

(ii) Identify in that notice—

(A) The railroads affected;

(B) The number and type of cars involved;

(C) The commodities being carried; and

(D) The territorial and speed limits within which the cars will be operated; and

(iii) File the notice required by this paragraph not less than 30 days before the cars operate in dedicated service;

(e) "In service" when used in connection with a railroad freight car, means each railroad freight car subject to this part unless the car—

(1) Has a "bad order" or "home shop for repairs" tag or card containing the prescribed information attached to each side of the car and is being handled in accordance with § 215.9 of this part;

(2) Is in a repair shop or on a repair track; or

(3) Is on a storage track and is empty.

(f) "Railroad" means common carrier by railroad.

(g) "State inspector" means an inspector who is participating in investigative and surveillance activities under section 206 of the Federal Railroad Safety Act of 1970 (45 U.S.C. 435).

§ 215.7 Prohibited acts.

A railroad is subject to a penalty, as provided in Appendix C of this part, if it fails to comply with any provision of this part.

§ 215.9 Movement of defective cars for repair.

(a) A railroad freight car which has any component described as defective in this part may be moved to another location for repair only after the railroad has complied with the following:

(1) A person designated under § 215.11 shall determine—

(i) That it is safe to move the car; and

(ii) The maximum speed and other restrictions necessary for safely conducting the movement;

(2)(i) The person in charge of the train in which the car is to be moved shall be notified in writing and inform all other crew members of the presence of the defective car and the maximum speed and other restrictions determined under paragraph (a)(1)(ii) of this section.

(ii) A copy of the tag or card described in paragraph (a)(3) of this section may be used to provide the notification required by paragraph (a)(2)(i) of this section.

(3) A tag or card bearing the words "bad order" or "home shop for repairs" and containing the following information, shall be securely attached to each side of the car—

(i) The reporting mark and car number;

(ii) The name of the inspecting railroad;

(iii) The inspection location and date;

(iv) The nature of each defect;

(v) Movement restrictions;

(vi) The destination for shopping or repair; and

(vii) The signature of a person designated under § 215.11.

(b)(i) The tag or card required by paragraph (a)(3) of this section may only be removed from the car by a person designated under § 215.11 of this part.

(ii) A record or copy of each tag or card attached to or removed from a car shall be retained for 90 days and, upon request, shall be made available within 15 calendar days for inspection by FRA or State inspectors.

(iii) Each tag or card removed from a car shall contain a notification stating the date, location, reason for its removal, and the signature of the person who removed it from the car. These recordkeeping requirements have been approved by the Office of Management and Budget in accordance with the Federal Reports Act of 1942.

(c) Movement of a freight car under paragraph (a) of this section may be made only for the purpose of effecting

repairs. If the car is empty, it may not be placed for loading. If the car is loaded, it may not be placed for unloading unless unloading is consistent with determinations made and restrictions imposed under paragraph (a)(1) of this section and—

(1) The car is consigned for a destination on the line of haul between the point where the car was found defective and the point where repairs are made; or

(2) Unloading is necessary for the safe repair of the car.

§ 215.11 Designation of qualified persons.

(a)(1) Each railroad that operates railroad freight cars to which this part applies shall designate persons qualified to inspect railroad freight cars for defects prescribed by this part.

(2) Each person designated under paragraph (a)(1) of this section shall have demonstrated to the railroad a knowledge and ability to inspect railroad freight cars for compliance with the requirements of this part.

(b) With respect to designations under paragraph (a) of this section, each railroad shall maintain written records of—

(1) Each designation in effect; and

(2) The basis for each designation.

§ 215.13 Predeparture inspection.

At each location where a freight car is placed in a train, the freight car shall be inspected for compliance with the requirements of this part by a qualified person designated under § 215.11 of this part before the train departs that location. This inspection may be made before or after the car is placed in the train.

§ 215.15 Periodic inspection.

(a) After June 30, 1980, a railroad may not place or continue in service a freight car that has not received an initial periodic inspection in accordance with 49 CFR § 215.25, as in effect on October 6, 1976 (41 FR 44044), unless—

(1) The car is a high utilization car built or reconditioned after December 31, 1977; or

(2) The car is a non-high utilization car built or reconditioned after December 31, 1971.

(b) A freight car that has received an initial periodic inspection under paragraph (a) of this section shall be stenciled to so indicate in accordance with 49 CFR § 215.11 and Appendix C of this part, as in effect on October 6, 1976 (41 FR 44044). This stenciling need not be retained on the car after June 30, 1981.

(c) As used in this section, "high utilization car" means a car—

(1) Specifically equipped to carry trucks, automobiles, containers, trailers, or removable trailer bodies for the transportation of freight; or

(2) Assigned to a train that operates in a continuous round trip cycle between the same two points.

Subpart B—Freight Car Components

§ 215.101 Scope.

This subpart contains safety requirements prohibiting a railroad from placing or continuing in service a freight car that has certain defective components.

Suspension System

§ 215.103 Defective wheel.

A railroad may not place or continue in service a car, if—

(a) A wheel flange on the car is worn to a thickness of ⅞ of an inch, or less, at a point ⅜ of an inch above the tread of the wheel;

(b) The height of a wheel flange on the car, from the tread to the top of the flange, is 1½ inches, or more;

(c) The thickness of a rim of a wheel on the car is 11/16 of an inch, or less;

(d) A wheel rim, flange, plate, or hub area on the car has a crack or break;

(e) A wheel on the car has a chip or gouge in the flange that is 1½ inches in length and ½ inch in width, or more;

(f) A wheel on the car has—

(1) A slid flat or shelled spot that is more than 2½ inches in length; or

(2) Two adjoining flat or shelled spots each of which is more than two inches in length;

(g) A wheel on the car shows evidence of being loose such as oil seepage on the back hub or back plate;

(h) A wheel on the car shows signs of having been overheated as evidenced by a reddish brown discoloration on the front or back face of the rim, that extends more than four inches into the plate area measured from the bottom of the back face of the rim; or

(i) A wheel on the car has been welded unless the car is being moved for repair in accordance with § 215.9 of this part.

§ 215.105 Defective axle.

A railroad may not place or continue in service a car, if—

(a) An axle on the car has a crack or is broken;

(b) An axle on the car has a gouge in the surface that is—

(1) Between the wheel seats; and

(2) More than one-eighth inch in depth;

(c) An axle on the car, used in conjunction with a plain bearing, has an end collar that is broken or cracked;

(d) A journal on the car shows evidence of overheating, as evidenced by a pronounced blue black discoloration; or

(e) The surface of the plain bearing journal on the axle, or the fillet on the axle, has—

(1) A ridge;

(2) A depression;

(3) A circumferential score;

(4) Corrugation;

(5) A scratch;

(6) A continuous streak;

(7) Pitting;

(8) Rust; or

(9) Etching.

§ 215.107 Defective plain bearing box: General.

A railroad may not place or continue in service a car, if the car has—

(a) A plain bearing box that does not contain visible free oil;

(b) A plain bearing box lid that is missing, broken, or open except to receive servicing; or

(c) A plain bearing box containing foreign matter, such as dirt, sand, or coal dust, that can reasonably be expected to—

(1) Damage the bearing; or

(2) Have a detrimental effect on the lubrication of the journal and the bearings.

§ 215.109 Defective plain bearing box: Journal lubrication system.

A railroad may not place or continue in service a car, if the car has a plain bearing box with a lubricating pad that—

(a) Has a tear extending half the length or width of the pad, or more;

(b) Shows evidence of having been scorched, burned, or glazed;

(c) Contains decaying or deteriorated fabric that impairs proper lubrication of the pad;

(d) Has—

(1) An exposed center core (except by design); or

(2) Metal parts contacting the journal; or

(e) Is—

(1) Missing; or

(2) Not in contact with the journal.

§ 215.111 Defective plain bearing.

A railroad may not place or continue in service a car, if the car has a plain bearing—

(a) That is missing, cracked, or broken;

(b) On which the bearing liner—

(1) Is loose; or

(2) Has a broken out piece; or

(c) That shows signs of having been overheated, as evidenced by—

(1) Melted babbitt;

(2) Smoke from hot oil; or
(3) Journal surface damage.

§ 215.113 Defective plain bearing wedge.

A railroad may not place or continue in service a car, if a plain bearing wedge on that car is—
(a) Missing;
(b) Cracked;
(c) Broken; or
(d) Not located in its design position.

§ 215.115 Defective roller bearing.

(a) A railroad may not place or continue in service a car, if the car has—
(1) A roller bearing that shows signs of having been overheated as evidenced by—
(i) Discoloration; or
(ii) Other telltale signs of overheating such as damage to the seal or distortion of any bearing component;
(2) A roller bearing with a—
(i) Loose or missing cap screw; or
(ii) Broken, missing, or improperly applied cap screw lock; or
(3) A roller bearing with a seal that is loose or damaged, or permits leakage of lubricant in clearly formed droplets.
(b)(1) A railroad may not continue in service a car that has a roller bearing whose truck was involved in a derailment unless the bearing has been inspected and tested by—
(A) Visual examination to determine whether it shows any sign of damage; and
(B) Spinning freely its wheel set to determine whether the bearing makes any unusual noise.
(2) The roller bearing shall be disassembled from the axle and inspected internally if—
(A) It shows any external sign of damage;
(B) It makes any unusual noise when its wheel set is spun freely;
(C) Its truck was involved in a derailment at a speed of more than 10 miles per hour; or
(D) Its truck was dragged on the ground for more than 200 feet.
(3) Each defective roller bearing shall be repaired or replaced before the car is placed back in service.

§ 215.117 Defective roller bearing adapter.

A railroad may not place or continue in service a car, if the car has a roller bearing adapter that is—
(a) Cracked or broken;
(b) Not in its design position; or
(c) Worn on the crown of the adapter to the extent that the frame bears on the relief portion of the adapter, as shown in the figure below (see figure 1).

§ 215.119 Defective freight car truck.

A railroad may not place or continue in service a car, if the car has—
(a) A side frame or bolster that—
(1) Is broken; or
(2) Has a crack of ¼ of an inch or more in the transverse direction on a tension member;
(b) A truck equipped with a snubbing device that is ineffective, as evidenced by—
(1) A snubbing friction element that is worn beyond a wear indicator;
(2) A snubber wear plate that is loose, missing (except by design), or worn through;
(3) A broken or missing snubber activating spring; or

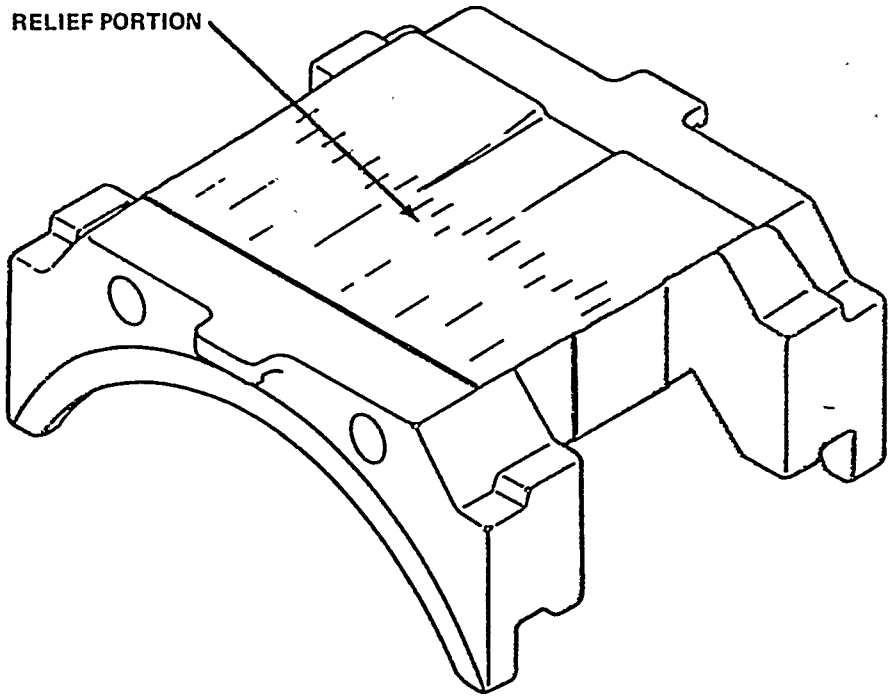

FIGURE 1

(4) Snubber unit that is broken, or in the case of hydraulic units, is broken or leaking clearly formed droplets of oil or other fluid.
(c) A side bearing in any of the following conditions:
(1) Part of the side bearing assembly is missing or broken;
(2) The bearings at one end of the car, on both sides, are in contact with the body bolster (except by design);
(3) The bearings at one end of the car have a total clearance from the body bolster of more than ¾ of an inch; or
(4) At diagonally opposite sides of the car, the bearings have a total clearance from the body bolsters of more than ¾ of an inch;
(d) Truck springs—
(1) That do not maintain travel or load;
(2) That are compressed solid; or
(3) More than one outer spring of which is broken, or missing, in any spring cluster;
(e) Interference between the truck bolster and the center plate that prevents proper truck rotations; or

(f) Brake beam shelf support worn so excessively that it does not support the brake beam.

Car Bodies

§ 215.121 Defective car body.

A railroad may not place or continue in service a car, if—

(a) Any portion of the car body, truck, or their appurtenances (except wheels) has less than a 2½ inch clearance from the top of rail;

(b) The car center sill is—

(1) Broken;

(2) Cracked more than 6 inches; or

(3) Permanently bent or buckled more than 2½ inches in any six foot length;

(c) The car has a coupler carrier that is—

(1) Broken;

(2) Missing;

(3) Non-resilient and the coupler has a type F head.

(d) After (six months after the effective date of this final rule), the car is a box car and its side doors are not equipped with operative safety hangers, or the equivalent, to prevent the doors from becoming disengaged;

(e) The car has a center plate—

(1) That is not properly secured;

(2) Any portion of which is missing; or

(3) That is broken; or

(4) That has two or more cracks through its cross section (thickness) at the edge of the plate that extend to the portion of the plate that is obstructed from view while the truck is in place; or

(f) The car has a broken sidesill, crossbearer, or body bolster.

Draft System

§ 215.123 Defective couplers.

A railroad may not place or continue in service a car, if—

(a) The car is equipped with a coupler shank that is bent out of alignment to the extent that the coupler will not couple automatically with the adjacent car;

(b) The car has a coupler that has a crack in the highly stressed junction area of the shank and head as shown in the figure below (see figure 2).

(c) The car has a coupler knuckle that is broken or cracked on the inside pulling face of the knuckle.

(d) The car has a knuckle pin or knuckle thrower that is—

(1) Missing; or

(2) Inoperative; or

(e) The car has a coupler retainer pin lock that is—

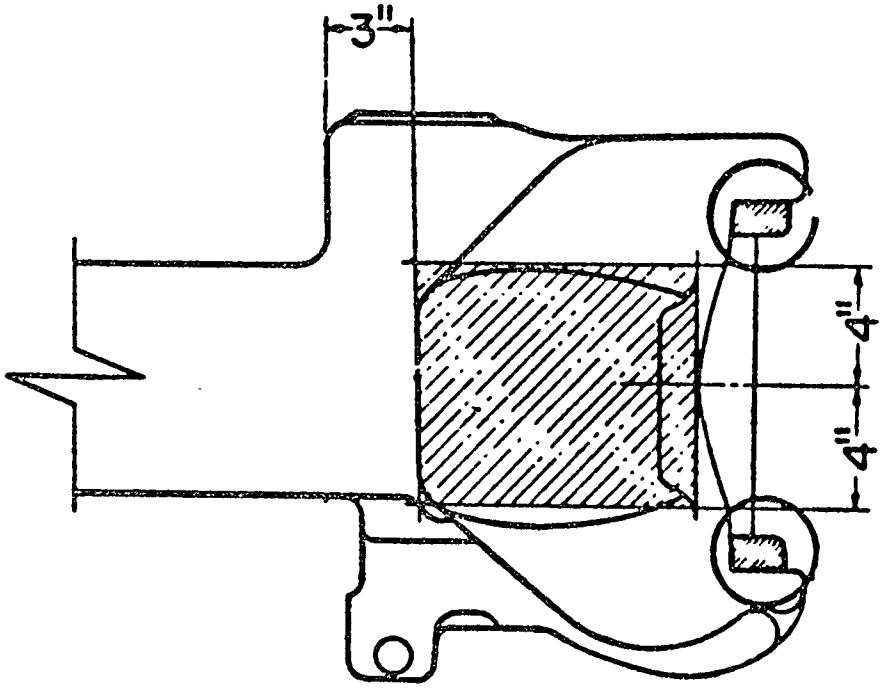

Figure 2

(1) Missing; or

(2) Broken; or

(f) The car has a coupler with any of the following conditions:

(1) The locklift is inoperative;

(2) The coupler assembly does not have anticreep protection to prevent unintentional unlocking of the coupler lock; or

(3) The coupler lock is—

(i) Missing;

(ii) Inoperative;

(iii) Bent;

(iv) Cracked; or

(v) Broken.

§ 215.125 Defective uncoupling device.

A railroad may not place or continue in service a car, if the car has an uncoupling device without sufficient vertical and lateral clearance to prevent—

(a) Fouling on curves; or

(b) Unintentional uncouplings.

§ 215.127 Defective draft arrangement.

A railroad may not place or continue in service a car, if—

(a) The car has a draft gear that is inoperative;

(b) The car has a broken yoke;

(c) An end of car cushioning unit is—

(1) Leaking clearly formed droplets; or

(2) Inoperative;

(d) A vertical coupler pin retainer plate—

(1) Is missing (except by design); or

(2) Has a missing fastener;

(e) The car has a draft key, or draft key retainer, that is—

(1) Inoperative; or

(2) Missing; or

(f) The car has a missing or broken follower plate.

§ 215.129 Defective cushioning device.

A railroad may not place or continue in service a car if it has a cushioning device that is—

(a) Broken;

(b) Inoperative; or

(c) Missing a part—

unless its sliding components have been effectively immobilized.

Subpart C—Restricted Equipment

§ 215.201 Scope.

This subpart contains requirements restricting the use of certain railroad freight cars.

215.203 Restricted cars.

(a) This section restricts the operation of any railroad freight car that is—

(1) More than 50 years old, measured from the date of original construction;

(2) Equipped with any design or type component listed in Appendix A to this part; or

(3) Equipped with a Duryea underframe constructed before April 1, 1950, except for a caboose which is operated as the last car in a train.

(b) A railroad may not place or continue in service a railroad freight car described in paragraph (a) of this section, except under conditions approved by the Federal Railroad Administrator.

(c) A railroad may petition the Administrator to continue in service a car described in paragraph (a) of this section. Each petition shall be

(1) Be submitted not less than 90 days before the car is to be operated;

(2) Be submitted in triplicate; and

(3) State or describe the following:

(i) The name and principal business address of the petitioning railroad.

(ii) The name and address of the entity that controls the operation and maintenance of the car involved.

(iii) The number, type, capacity, reporting marks, and car numbers of the cars, their condition, status, and age measured from the date of original construction.

(iv) The design, type component, or other item that causes the car to be restricted.

(v) The maximum load the cars would carry.

(vi) The maximum speed at which the cars would be operated.

(vii) That each car has been examined and found to be safe to operate under the conditions set forth in the petition.

(viii) The territorial limits within which the cars are to be operated and the name of each railroad that will receive the cars in interchange.

Subpart D—Stenciling

§ 215.301 General.

The railroad or private car owner reporting mark, the car number, and built date shall be stenciled, or otherwise displayed, in clearly legible letters and numbers not less than seven inches high, except those of the built date which shall not be less than one inch high—

(a) On each side of each railroad freight car body; and

(b) In the case of a tank car, in any location that is visible to a person walking at track level beside the car.

§ 215.303 Stenciling of restricted cars.

(a) Each restricted railroad freight car that is described in § 215.205(a) of this part shall be stenciled, or marked—

(1) In clearly legible letters; and

(2) In accordance with paragraphs (b) and (c) of this section.

(b) The letter "R" shall be—

(1) Placed immediately below or to the right of the car number;

(2) The same color as the reporting mark; and

(3) The same size as the reporting mark.

(c) The following terms, to the extent needed to completely indicate the basis for the restricted operation of the car, shall be placed on the car following the symbol "R" in letters not less than one inch high:

(1) Age.

(2) Coupler.

(3) Draft.

(4) Bearings.

(5) Truck.

(6) Underframe.

(7) Wheels.

(8) Yoke.

§ 215.305 Stenciling of maintenance-of-way equipment.

(a) Maintenance-of-way equipment (including self-propelled maintenance-of-way equipment) described in § 215.3(c)(3) shall be stenciled, or marked—

(1) In clearly legible letters; and

(2) In accordance with paragraph (b) of this section.

(b) The letters "MW" must be—

(1) Placed adjacent to the car number on each side of the car; and

(2) The same size as the reporting mark.

Appendix A—Railroad Freight Car Components

List of components whose use is restricted by § 215.203 of this part.

A. Air brakes:

The "K" type.

B. Axles:

1. Former AAR alternate standard tubular type.

2. Axle with letters "RJ" stamped on the end of the journal.

C. Couplers:

1. AAR type "D", top or bottom operated.

2. AAR type "E" with 5" by 7" shank.

D. Draft arrangement:

1. Miner FR-16 and FR-19-F draft gears.

2. Farlow draft attachment.

E. Plain journal bearings:

Cartridge type.

F. Roller bearings:

1. Nippon Sieko Kabushiki Kaish (NSK) size 6½" by 12" (marked "AAR 11").

2. Hyatt cylindrical bearing, all sizes (marked "AAR 2").

3. SKF "Piggybacker" spherical roller, size 6" by 11" (marked "AAR 7").

G. Trucks:

1. Arch bar type.

2. Truck with cast steel pedestal side frame, short wheel base, and no bolster.

H. Truck bolsters:

1. A bolster with one of the following pattern numbers listed according to manufacturer:

A.S.F.	Dresser (Symington)	Birdsboro	Lenoir car works
21183-B	BO 5234	1458 1463	CS-184.
21183-N	BO 5263 BO 7078	1471	CS-611.
21649-C	BO 7076-A		
22056-E	BO 7115		

2. Bolster cast before 1927.

3. Bolster without an identification mark or pattern number.

I. 1. Truck side frames:

A side frame with one of the following pattern numbers listed according to manufacturer:

A.S.F.	National castings	Buckeye	Dominion
7273	33793-1B	3-1776	TF-5100
7323		F-420	
21352 (cast prior to June 1941).			

Pittsburgh steel foundry	Scullin steel	Bettendorf	Canadian steel foundry
31673	42-CS-160	UT 456	26565
4-1662			
3-1674	4665		
4-2045	4770		
12897	4942		
12921	5220		
21263	5354		
	5364-C		
	5364-E		
	5811-A		
	5869-B		
	6577-A		

2. Side frame cast before 1927.

3. Side frame without an identification mark or pattern number.

4. Side frame with an "I", "T", or "L" section compression or tension member.

J. Wheels:

1. Cast iron wheel.

2. Cast steel wheel marked "AAR X-2."

3. Southern cast steel wheel manufactured before May 7, 1958.
4. Griffin, three-riser cast steel wheel, ball rim design, 70-ton capacity.
5. Griffin, three-riser cast steel wheel, two-wear, 70- and 50-ton capacity, 33 inch, (marked X-5 or CS-2).
6. Wrought steel wheel manufactured before 1927, as indicated by marking on wheel.
7. Cast steel wheel marked AAR X-4.
8. Davis cast steel wheel.
9. One-wear, 70-ton Southern (ABEX) U1 cast steel wheels dated May 7, 1958 through December 31, 1969.

A. Wheels dated May 7, 1958, to January 1, 1964, are marked with the symbol "70T" cast on the back of the wheel plate; they are not marked "U-1."

B. Wheels dated January 1, 1964 through December 31, 1969, are marked with the symbols "CJ-33" and "U-1" *or* "70T" and "U-1" cast on the back of the wheel plate.

K. Yokes:
1. Riveted type.
2. Keyless type.
3. Vertical key type.

Appendix B—Schedule of Civil Penalties[1]

	Violation	Intentional violation[2]
Subpart A—General		
§ *215.9 Movement for repair*		
(a), (c)	$ (3)	$ (3)
(b)	1,000	1,000
§ *215.11 Designation of qualified persons*	500	1,000
§ *215.13 Pre-departure inspection*	500	1,000
§ *215.15 Periodic inspection*	1,000	1,000
Subpart B—Freight Car Components		
§ *215.103 Defective wheel*		
(a) Flange thickness of:		
(i) ⅞" or less but more than 13/16"	1,500	2,000
(ii) 13/16" or less	2,000	2,500
(b) Flange height of:		
(i) 1½" or greater but less than 1⅝"	1,500	2,000
(ii) 1⅝" or more	2,000	2,500
(c) Rim thickness of:		
(i) 11/16" or less but more than ⅝"	1,500	2,000
(ii) ⅝" or less	2,000	2,500
(d)—		
(i) Crack of less than 1"	1,250	1,750
(ii) Crack of 1" or more	2,000	2,500
(iii) Break	2,500	2,500
(e) Chip or gouge in flange of:		
(i) 1½" or more but less than 1⅝" in length; and ½" or more but less than ⅝" in width	1,000	1,500
(ii) 1⅝" or more in length; or ⅝" or more in width	1,500	2,000
(f) Slid flat or shelled spot(s):		
(1) (i) One spot more than 2½", but less than 3", in length	750	1,000
(ii) One spot 3" or more in length	1,500	2,000
(2) (i) Two adjoining spots each of which is more than 2", but less than 2½", in length	1,000	1,500
(ii) Two adjoining spots both of which are at least 2" in length, if either spot is 2½", or more in length	1,500	2,000
(g)	1,000	1,500
(h) Overheated; discoloration extending:		
(i) More than 4" but less than 4½"	750	1,250
(ii) 4½" or more	1,250	1,750
(i)	1,000	1,500

Appendix B—Schedule of Civil Penalties[1]—Cont'd

	Violation	Intentional violation[2]
§ *215.105 Defective axle*		
(a)—		
(i) Crack of 1" or less	1,000	1,500
(ii) Crack of more than 1"	1,500	2,000
(iii) Break or visible separation of metal at any crack	2,000	2,500
(b)	750	1,250
(c), (d)	1,000	1,500
(e)	500	1,000
§ *215.107 Defective plain bearing box: general*		
(a)—		
(i) No visible free oil	750	1,250
(ii) Lubricating pad dry (no expression of oil observed when pad is compressed)	2,000	2,500
(b), (c)	1,000	1,500
§ *215.109 Defective plain bearing box: journal lubrication system*		
(a), (b), (c)	500	1,000
(d)	500	1,000
(e)	2,000	2,500
§ *215.111 Defective plain bearing*		
(a)	1,000	1,500
(b)	750	1,500
(c)	1,000	1,500
§ *215.113 Defective plain bearing wedge*		
(a)	1,000	1,500
(b), (c)	500	1,000
(d)	1,000	1,500
§ *215.115 Defective roller bearing*		
(a)—(1)	1,750	2,500
(2) (i) Cap screws loose or missing:		
one cap screw	1,000	1,500
two or three cap screws	1,500	2,000
(ii) Cap screw lock broken, missing or improperly applied	500	1,000
(3)	1,000	1,500
(b)—(1)	750	1,000
(2)	1,000	1,500
(3)	2,000	2,500
§ *215.117 Defective roller bearing adapter*		
(a)	1,000	1,500
(b)	1,500	2,000
(c)	1,000	1,500
§ *215.119 Defective freight car truck*		
(a)—(1)	2,000	2,500
(2) Side frame or bolster with crack of:		
(i) ¼" or more, but less than 1"	1,000	1,500
(ii) 1" or more	1,500	2,000
(b)	1,000	1,500
(c) Side bearing(s):		
(1), (2)	2,000	2,500
(3), (4) Total clearance at one end or at diagonally opposite sides of:		
(i) More than ¾" but not more than 1"	750	1,250
(ii) More than 1"	1,500	2,000
(d)—(1)	1,000	1,500
(2)	1,500	2,000
(3) Outer truck springs broken or missing:		
(i) Two outer springs	1,500	2,000
(ii) Three or more outer springs	2,500	2,500
(e)	2,000	2,500
(f)	1,000	1,500
§ *215.121 Defective car body*		
(a)	1,000	1,500
(b)—(1)	1,500	2,000
(2), (3)	1,000	1,500
(c), (d)	1,000	1,500
(e)—(1)	2,000	2,500
(2)	1,250	1,500
(3)	1,000	1,500
(f)	1,000	1,500
§ *215.123 Defective couplers*		
(a)	500	1,000
(b)	1,000	1,500
(c)	1,000	1,500
(d)	1,000	1,500
(e)	750	1,000
(f)	1,500	2,000

Appendix B—Schedule of Civil Penalties—Cont'd

	Violation	Intentional violation[2]
§ *215.125 Defective uncoupling device*	1,000	1,500
§ *215.127 Defective draft arrangement*		
(a), (b)	1,000	1,500
(c)	1,000	2,000
(d)	1,250	1,750
(e), (f)	1,000	1,500
215.129 Defective cushioning device	1,000	1,500
Subpart C—Restricted Equipment		
§ *215.203 Restricted cars*	1,500	2,500
Subpart D—Stenciling		
§ *215.301 General*	500	1,000
§ *215.303 Stenciling of restricted cars*	500	1,000
§ *215.305 Stenciling of maintenance-of-way equipment.*	(4)	(4)

Note on multiple violations: When two or more violations of these regulations are discovered with respect to a single freight car that is placed or continued in service by a railroad, the appropriate penalties set forth above are aggregated up to a maximum of $2,500 per day. For example, a railroad that continued a car in service with a missing side bearing assembly ($2,000) and no visible free oil in a plain journal box ($750) would be liable to a penalty of $2,500.

[1] Section 209 of the Federal Railroad Safety Act of 1970 (45 U.S.C. 438) requires the Secretary of Transportation to "include in, or make applicable to, any railroad safety rule, regulation, order, or standard issued under this title a civil penalty for violation thereof . . . in such amount, not less than $250 nor more than $2,500, as he deems reasonable." Each day of violation constitutes a separate offense.

[2] For purposes of this schedule, an intentional violation is the knowing and willful failure of a railroad to comply with the provisions of this part. The knowledge required for an intentional violation is knowledge of the facts constituting the violation. Knowledge of the regulations is presumed by law. Evidence that a violation has been committed or has been allowed to continue after an FRA or State inspector has provided the railroad notification of a deviation from the requirement of this part is *prima facie* evidence that the violation was knowing and willful. Evidence that a repair has been made to a freight car component but that component was not brought into full compliance with the standards is *prima facie* evidence that the violation was knowing and willful.

[3] Failure to observe any condition for movement set forth in paragraphs (a) and (c) of § 215.9 will deprive the railroad of the exception and make the railroad liable for penalty under Sections 215.103 through 215.129.

[4] Maintenance-of-way equipment not stenciled in accordance with § 215.305 is subject to all requirements of this part. *See* § 215.3(c)(3).

Appendix C—FRA Freight Car Standards Defect Code

The following defect code has been established for use by FRA and State inspectors to report defects observed during inspection of freight cars. The purpose of the code is to establish a uniform language among FRA, States, and the railroad industry that will facilitate communication, recordkeeping, and statistical analyses. The code may not be substituted for the description of defects on bad order tags affixed to cars being moved for repair under § 215.9. However, it may be used to supplement that description.

Index

General

215.009 Improper Movement of Defective Cars.
215.011 Designation of Qualified Persons.
215.013 Failure to Perform a Pre-departure Inspection.
215.015 Failure to Complete Initial Periodic Inspection as Required.

Freight Car Components

Suspension System

215.103 Defective Wheel.
215.105 Defective Axle.
215.107 Defective Plain Bearing Box: General.
215.109 Defective Plain Bearing Box: Journal Lubrication System.
215.111 Defective Plain Bearing.
215.113 Defective Plain Bearing Wedge.
215.115 Defective Roller Bearing.
215.117 Defective Roller Bearing Adapter.
215.119 Defective Freight Car Truck.

Car Bodies

215.121 Defective Car Body.

Draft System

215.123 Defective Couplers.
215.125 Defective Uncoupling Device.
215.127 Defective Draft Arrangement.
215.129 Defective Cushioning Device.

Restricted Equipment

215.203 Restricted Cars.

Stenciling

215.301 Improper Stenciling.
215.303 Improper Stenciling of Restricted Cars.
215.305 Improper Stenciling of Maintenance-of-Way Equipment.

Description of Defects

215.009 Failure to meet conditions for movement of defective cars for repairs.
215.011 Designation of Qualified Persons.
(A)(1) Railroad fails to designate persons qualified to inspect freight cars;
(2) Persons designated does not have knowledge and ability to inspect freight cars for compliance with the requirements of this part.
(B) Railroad fails to maintain written record of:
(1) Each designation in effect;
(2) The basis for this designation.
215.013 Failure to perform pre-departure inspection.
215.015 Periodic Inspection.
(A) Railroad fails to perform the periodic inspection as required by June 30, 1980 on:
(1) High utilization car built prior to December 31, 1977;
(2) Non-high utilization car built prior to December 31, 1971;
(B) A freight car improperly stenciled for periodic inspection.
215.103 Defective Wheel.
(A)(1) Flanges ⅞" or less at ⅜" above the tread;
(2) Flanges 13/16" or less at ⅜" above the tread;
(3) Flanges ¾" or less at ⅜" above the tread;
(B)(1) Flange is 1½" or more from the tread to top of flange;
(2) Flange is 1⅝" or more from the tread to top of flange;
(3) Flange is 1¾".
(C)(1) Rim thickness is 1 1/16" or less;
(2) Rim thickness is ⅝" or less;
(3) Rim thickness is 9/16" or less;
(D) Wheel cracked or broken in: (1) rim, (2) flange, (3) plate or (4) hub area.
(E) Wheel chip or gouge in flange:
(1) 1½" length and ½" in width or more;
(2) 1⅝" length and ⅝" in width or more;
(3) 1¾" in length and ¾" in width or more.
(F) Wheel has slid flat spot or shelled spot:
(1) 2½" in length or more;
(2) Has two adjoining flat spots each of which is 2" in length or greater;
(3) A single flat spot 3" in length or more;
(4) Has two adjoining flat spots one of which is at least 2" in length and the other is 2½" or greater.
(G) has a loose wheel.
(H) Overheated with discoloration extending: (1) More than 4"; (2) 4½" or more.
(I) A welded wheel on car that is not moving for repairs.
215.105 Defective Axle.
(A) Cracked or broken:
(1) Cracked 1' or less;
(2) Cracked greater than 1";
(3) Broken or cracked with visible separation of metal.
(B) Gauge between wheel seats more than ⅛" in depth:
(C) Broken or cracked end collar on plain bearing axle.
(D) Overheated journal.
(E) Surface of plain bearing journal or fillet has (1) ridge, (2) depression, (3) circumferential score, (4) corrugation, (5) scratch, (6) continuous streak, (7) pitting, (8) rust, (9) etching.
215.107 Defective plain bearing box.
(A) (1) Does not contain visible free oil;
(2) A journal box with dry pad.
(B) Lid is missing, broken or open except to receive service.
(C) Box has foreign matter that will damage bearing or prevent lubrication.
215.109 Defective plain bearing box: journal lubrication system.
(A) Pad torn half the length or width.
(B) Scorched, burned or glazed.
(C) Contains decaying or deteriorated fabric.
(D) Has exposed core except by design of metal parts in contact with journal.
(E)(1) Missing;
(2) Not in contact with journal.
215.111 Defective plain bearing.
(A) Missing, cracked or broken.
(B)(1) Bearing lining is loose;
(2) Broken out piece.
(C) Overheated as evidenced by:
(1) Melted babbit;
(2) Smoke from hot oil;
(3) Journal surface damaged.
215.113 Defective plain bearing wedge.
(A) Missing.
(B) Cracked.
(C) Broken.
(D) Not located in design position.
215.115 Defective roller bearing.
(A)(1) Overheated;
(2) Loose or missing cap screw;
(3) Roller bearing seal loose or damaged permitting loss of lubricant;
(4) Two or more missing cap screws.
(B)(1) Failure to inspect if involved in derailment;
(2) Failure to disassemble if required under this part;
(3) Failure to repair or replace defective roller bearings.
215.117 Defective roller bearing adapter.
(A) Cracked or broken.
(B) Not in design position.
(C) Worn excessively as shown on Figure 1 in relief portion.
215.119 Defective freight car trucks.
(A)(1) Side frame or bolster broken;
(2) Cracked ¼" or more in transverse direction on tension member;
(3) Cracked 1" or more in transverse direction on tension member.
(B) Has ineffective snubbing devices.
(C)(1) Missing or broken side bearing;
(2) Side bearing in contact except by design;
(3) Excessive side bearing clearance at one end of car;
(4) Excessive side bearing clearance on opposite sides at diagonal ends of car.
(D)(1) Has truck springs that will not maintain travel or load;
(2) Truck springs that are compressed solid;
(3) Has two springs broken in a cluster;
(4) Has three or more springs broken.
(E) Truck bolster and center plate interference preventing rotation.
(F) Has broken beam shelf supports worn so that shelf will not support beam.
215.121 Defective car body.
(A) Improper clearance—less than 2½" from top of rail.
(B) Center sill is:
(1) Broken;
(2) Cracked more than 6";
(3) Bent or buckled more than 2½" in any 6-foot length.
(C) Coupler carrier is:
(1) Broken;
(2) Missing;
(3) Non-resilient when used with coupler with F head.
(D) Car door not equipped with operative safety hangers.
(E) If center plate:
(1) Any portion missing;
(2) Broken or cracked as defined in this part.
(F) Broken side sills, crossbars or body bolster.
215.123 Defective couplers.
(A) Coupler shank bent.
(B) Coupler cracked in highly stressed area of head and shank.
(C) Coupler knuckle broken.
(D) Coupler knuckle pin or knuckle throw:
(1) Missing;
(2) Inoperative.
(E) Coupler retainer pin lock:
(1) Missing;
(2) Broken.
(F)(1) Coupler locklift is inoperative;
(2) No anti-creep protection;
(3) Coupler lock is (i) missing, (ii) inoperative, (iii) bent, (iv) cracked or (v) broken.
215.125 Defective uncoupling device.
(A) Fouling on curve.
(B) Unintentional uncoupling.
215.127 Defective draft arrangement.
(A) Draft gear inoperative.
(B) Broken yoke.
(C) End of car cushioning unit:
(1) Leaking;
(2) Inoperative.
(D) Vertical coupler pin retainer plate:
(1) Missing;

(2) Has missing fastener.
(E) Draft key or key retainer:
(1) Inoperative;
(2) Missing.
(F) Follower plate missing or broken.
215.129 Defective cushioning device unless effectively immobilized.
(A) Broken.
(B) Inoperative.
(C) Missing parts.
215.203 Operating a restricted car, except under conditions approved by FRA.

Stenciling

215.301 Failure to stencil car number and built date on freight car as required.
215.303 Failure to stencil restricted car as required.
215.305 Failure to stencil maintenance-of-way equipment as required.

Issued in Washington, D.C. on December 21, 1979.

John M. Sullivan,
Administrator.

[FR Doc. 79-39538 Filed 12-21-79; 11:25 am]
BILLING CODE 4910-06-M

[Docket No. RSGM-1, Notice No. 3]

49 CFR Part 223

Safety Glazing Standards—Locomotives, Passenger Cars and Cabooses

AGENCY: Federal Railroad Administration (FRA), Department of Transportation (DOT).

ACTION: Adoption of final rule.

SUMMARY: New Part 223 establishes minimum safety requirements for glazing materials in the windows of locomotives, passenger cars and cabooses. This Part requires that all newly built and most existing railroad equipment have improved safety glazing materials installed in order to reduce the risk of death or serious injury resulting from flying objects, including bullets.

DATES: This regulation is effective on January 31, 1980.

FOR FURTHER INFORMATION CONTACT:

Principal Authors

Principal Program Person: Rolf Mowatt-Larssen, Office of Standards and Procedures, Federal Railroad Administration, Washington, D.C. 20590. Phone (202) 426-0924. Principal Attorney: Lawrence I. Wagner, Office of the Chief Counsel, Federal Railroad Administration, Washington, D.C. 20590. Phone (202) 426-8836.

SUPPLEMENTARY INFORMATION:

On October 16, 1978, FRA published a notice of proposed rulemaking (NPRM) proposing to add a new Part 229 to establish minimum safety requirements for glazing materials that are to be installed on the windows of locomotives, passenger cars and cabooses (43 FR 47579). The purpose of the proposed regulation was to reduce the risk of death or serious injury for railroad crew members and railroad passengers from flying objects. This NPRM was also issued in response to a joint petition from the Association of American Railroads (AAR) and the Railway Labor Executive Association (RLEA).

Commenters Views

FRA solicited written comments and views on the proposed regulation and held a public hearing on November 29, 1978, to obtain oral comments on the proposal. Written comments were received from sixteen interested parties and oral presentations were made by eight parties at the public hearing. The commenters generally expressed support for the proposed rule but expressed some concern over specific provisions of the NPRM. However, two commenters did express doubt about the need for a regulation on glazing materials. One of these commenters noted the poor financial condition of the railroad industry and indicated that the magnitude of the safety problem was not sufficient to warrant a Federal rule that would necessitate large capital expenditures by the railroad industry. The other commenter expressed doubt that all railroads were experiencing a sufficiently high level of vandalism to warrant issuance of a Federal regulation and suggested that FRA should exclude from the coverage of the regulation railroads that do not have a safety problem in this area.

After reviewing the available data, FRA believes that a Federal regulation is needed to protect railroad crew members and railroad passengers. Although precise safety data is not available on this issue, the existing statistical information confirms the view of the AAR and the RLEA that a significant safety hazard exists and appears to be growing. For example, FRA data on accidents or incidents involving persons struck by thrown or otherwise propelled objects shows that some 246 people were injured in 1977 and that figure increased to 291 people in the year 1978. Additionally, data from the National Railroad Passenger Corporation (Amtrak) indicates that the FRA accident report statistics, which reflect only those instances in which a person is injured sufficiently to require at least first-aid treatment, understate the magnitude of the problem. For example, in calendar year 1978, Amtrak trains were subjected to in excess of one thousand stoning and nearly one hundred shooting incidents that did not result in accident reports being filed with the FRA. In view of these circumstances, FRA concludes that a significant safety hazard does exist which would be diminished by the installation of improved glazing materials. Accordingly, FRA is proceeding with the adoption of this regulation.

The concern expressed by the other commenter, that a railroad without a high incidence of vandalism should not be forced to comply with this regulation, can be resolved on a case by case basis through the issuance of a waiver of compliance. FRA is empowered to issue such waivers when the facts indicate that a waiver of compliance is consistent with the goal of improving rail safety and is in the public interest. FRA already has established waiver procedures in its Rules of Practice. (49 CFR Part 211.)

The remaining commenters expressed support for the proposed rule but voiced concern over specific provisions contained in the NPRM. These comments and resulting changes are discussed under the appropriate section heading in this preamble.

In adopting a final rule on glazing materials, FRA has decided to place these provisions in Part 223 rather than Part 229 as proposed in the NPRM. This decision reflects FRA's recently issued proposal to amend the Locomotive Inspection Rules and to place the amended provisions in Part 229. Additionally, FRA consolidated two proposed provisions (proposed Sections 229.7 and 229.9) into a single section which resulted in the renumbering of subsequent sections. Consequently, the following discussion is identified by reference to the final rule followed by the proposed section number in parenthesis.

Section 223.3 (Proposed Section 229.3). In the proposed regulation, FRA structured the provisions of Section 229.5(a) and Section 229.13 to permit some locomotives to continue in service without the prescribed retrofit, provided these units were not used as a lead or controlling locomotive. The language of these provisions was also drafted in such a way that a railroad could permit a vandal damaged unit to continue in service until the prescribed retrofit by assuring that such a unit was not the lead unit or the controlling unit occupied by the crew.

FRA believes that the concept contained in the proposed rule is valid but that the wording of the proposed rule could easily be misunderstood. Consequently, FRA decided to change the final rule to more clearly express

FRA's intent. This is being accomplished by providing a clear statement of how a railroad may exclude such locomotives from the applicability of this regulation. Additionally, FRA has added a provision that will require the identification of such units.

FRA has accomplished this change by revising the proposed regulation to include a new subsection (Section 223.3(b)(4)) to exclude from the applicability of this part units that are identified as a "designated locomotive". Additionally, FRA has added a definition of the concept of a designated unit which clearly details the steps that are needed to place a locomotive in this category.

Additionally, one commenter questioned whether the language contained in proposed Section 229.3(b)(3) was intended to exclude privately owned passenger cars. The commenter noted that approximately fifty passenger cars are owned by individuals, clubs and historical societies and that these cars range in age from 25 to 65 years. Given their vintage and limited use, the commenter urged that these cars should be considered historical or antiquated equipment and excluded from the glazing regulations but noted that the cars are not always operated in trains consisting exclusively of similar equipment.

It was not FRA's intent to include such cars within the scope of this regulation. FRA is revising the proposed language of this section to reflect that intent.

Section 223.5 (Proposed Section 229.5). In keeping with changes being made to § 223.3, FRA is altering the proposed language for this section. The first change involves the language contained in proposed § 229.5(a). In the final rule, § 223.5(a) contains a simple definition of what constitutes a "locomotive". The second change involves the addition of what constitutes a locomotive in "designated service" in § 233.5(m). Under this new definition, a locomotive that is operated under the specified operational limitations, may continue in service without installing the prescribed glazing materials. Since such units may not be occupied by operating or deadheading crews and must be stenciled to alert people to this fact, FRA believes that the necessary degree of employee safety will be achieved.

Several commenters also raised issues that relate to the definitions contained in proposed section 229.5. The first concerns the language used to define what constitutes a "yard locomotive." They noted that some locomotives, generally characterized as "switch locomotives", are used almost exclusively to perform switching functions within a yard. They suggested that the definition be drafted to permit such units to be considered as "yard locomotives" even though the units are occasionally used to perform industrial switching or transfer movements beyond the confines of a yard. This suggestion was echoed by another commenter who also asked that FRA define more precisely the concept of what constitutes a single yard for the purpose of this regulation.

FRA's intent was to permit locomotives that are operated exclusively within the confines of a yard to continue in service without a retrofit of the prescribed glazing materials. Available data indicates that the risk exposure for crew members from thrown objects or bullets is significantly lower when they are operating in a yard. Consequently, FRA proposed a narrow operational definition to identify and exclude these locomotive units. This definitional approach was chosen since it reflected the utilization of a locomotive rather than design characteristics of the unit. Utilization is the primary factor of concern to FRA in these circumstances. Broadening the scope of this provision, either by use of a design characteristic or by allowing these locomotives to occasionally operate beyond the yard, would expose crew members to greater risk of injury. Therefore, FRA has not accepted this suggestion. FRA is responding to the commenter's request for a better definition of what constitutes a single yard by revising this definition in order to reflect more fully FRA's intent and to resolve the perceived ambiguity problem that prompted this request. FRA believes that individual local practices of referring to portions of a given facility by a particular designation is the concern that prompted the request. This situation is illustrated most clearly in large hump yard facilities where distinct portions of the facility are given individual designations, such as the receiving yard, the classification yard, or some unique local name for easy reference purposes. FRA's intent is to treat a locomotive that stays within the confines of a particular yard facility as being a "yard locomotive" for the purposes of this regulation even though that unit may operate in various portions of a given facility. Consequently, FRA is revising the definition to include the phrase "single yard area." In providing this revised definition, FRA recognizes that only a few locomotives are utilized exclusively within a single yard area and that consequently the vast majority of locomotives used for yard service will require the installation of the prescribed glazing materials.

A number of commenters expressed concern over the absence of any provision concerning the manner in which glazing materials are to be installed. These commenters expressed a belief that the performance of the glazing materials could be affected by the manner of installation. FRA is aware of some limited data that supports the argument that this regulation should not be totally silent on the issue of how glazing materials are to be installed in the affected equipment. Since FRA's intent is to provide minimum safety standards in this area and because of the wide variances in equipment design, FRA is addressing this problem in a limited manner. Consequently, FRA is requiring that improved glazing materials be installed in such a manner that the occupants of any unit will not be injured in the event the glazing materials are impacted. This will assure that the total glazing installation will provide the same level of protection that glazing materials alone were intended to provide. This is being accomplished by revising the definition of what constitutes "certified glazing" in subsection (k).

The final comments regarding this section involved the concept of the "emergency opening window," defined in subsection (l), that is required to be installed in passenger cars. Some commenters suggested that FRA expand on its proposal and provide greater detail concerning the number of window exits, their location and method of identification. Other commenters inquired about the use of certain types of windows to meet this definition.

FRA's intent, in including a provision for emergency windows, was to assure that the use of improved glazing materials would not indirectly reduce passenger safety by making emergency egress more difficult in an accident or derailment situation. As FRA noted in the preamble to the NPRM, the known wide range of variables present in the existing fleet or passenger cars does not make it appropriate, in FRA's judgement, to provide additional, more specific requirements for these windows. The commenters, although urging greater FRA action, have provided neither data nor a conceptual framework that would permit FRA to adopt their suggestion. Consequently, FRA has not changed the proposed language.

The absence of any analogous emergency window provisions for locomotives and cabooses was also

noted by the commenters. FRA did not include such a provision in the proposed regulation because the limited number of people in these units and the number of available exits indicate that sufficient emergency egress capability is already provided. Accordingly, no additional Federal regulatory action is necessary. Moreover, many of the windows in these units are designed so that they slide open. This design feature permits easy egress in a crisis situation. FRA agrees, as urged by one commenter, that similarly designed windows in older passenger cars should be considered to be emergency opening windows.

Section 223.7 (Proposed §§ 229.7 and 229.9). FRA is providing a new caption for this section and is combining in this single section the provisions that were contained in proposed sections 229.7 and 229.9 concerning the liability for civil penalty for violation of this regulation and the procedure for obtaining a waiver of compliance with this regulation. This change is merely organizational in nature and reflects comparable sections in other FRA rules that are being revised.

Section 223.9 (Proposed § 229.11). Several commenters expressed concern over the proposed compliance date for newly built or rebuilt locomotives contained in proposed § 229.11. These commenters indicated that, if they decided to alter the existing methods for mounting glazing materials in locomotives, additional time would be necessary to accomplish this task and to produce the needed materials for use on the new units. This concern appears to have been intensified by the reservation that these commenters expressed about the stringency of the performance level for side glazing locations.

FRA believes that a six month lead time for compliance for newly built and rebuilt locomotives is appropriate and can be accomplished with reasonable effort. Additionally, FRA is revising the proposed performance level for materials used in side-facing glazing locations. This revision, which is discussed in greater detail below, should serve to make it easier to meet the proposed compliance date. Therefore, FRA has retained this proposal without change.

Section 223.11 (Proposed § 229.13). One commenter expressed concern over the wording contained in proposed § 229.13 that would require immediate retrofitting of a unit in the event that a locomotive window is broken or damaged. The commenter noted that this provision could cause severe compliance problems because of the need to remove equipment from service as soon as the damage occurred and urged that a period of ninety days be allowed for completion of this work. FRA agrees that the immediate action provision could produce unnecessary service disruptions and inconvenience to the public and is revising this provision to permit a railroad to continue the vandal damaged unit in service for a period not to exceed forty-eight hours. At the end of that period, the locomotive must either be removed from service until the required retrofit is accomplished or the unit must be placed in "designated service". The revised provision will allow a railroad to more effectively deal with the various operational problems that could be encountered under the terms of the proposed section and still provides for the requisite degree of crew safety.

Section 223.13 (Proposed § 229.15). A commenter expressed concern over the wording contained in proposed § 229.15 that would require immediate retrofitting of a caboose in the event that a window is broken or damaged. The commenter noted that compliance with this provision in situations such as branch line operations could cause unnecessary service disruptions. FRA agrees that the proposed language is unduly restrictive and is revising this provision to require that the work be accomplished within 30 days after the breakage occurs. FRA believes that this time frame is appropriate in light of the normal maintenance cycles for this equipment and the degree of hazard involved.

Section 223.15 (Proposed § 229.17). FRA did not receive any comments directly addressing the language contained in proposed § 229.17. FRA is adopting the proposed language without change.

Section 223.17 (Proposed § 229.21). The language of this section has basically remained unchanged from the wording that was contained in proposed § 229.21. The wording changed in adopting this final rule reflects the changed Part number and now includes passenger cars within its scope.

In adopting the final rule FRA is not including the restrictions on interim use contained in proposed § 229.21. All of the commenters who addressed the proposed interim use provision for equipped locomotives voiced opposition to this concept. Among the points raised by these commenters was the fact that compliance with this proposal could result in a reduction in operational safety in instances when circumstances require that a locomotive be equipped with cab signal devices, automatic train stop devices or snowplows. FRA agrees that the safety benefits derived in these instances outweigh those gained by adherence to the proposed language of this section. Consequently, FRA is deleting this provision from the final rule. FRA would urge railroads to adhere to the concept contained in the proposed rule unless there are other safety factors that would be compromised by such adherence.

Appendix A

FRA received a considerable volume of comments with regard to the language of this proposed provision which contains both the performance criteria and the testing methodology for the glazing materials. The initial point made by the commenters was the belief that FRA was being unduly restrictive by limiting the certification process to glazing manufacturers. The commenter offering this opinion believes that any party should be permitted to do the necessary testing and certification to achieve compliance.

FRA proposed that manufacturers do the requisite testing and certification because this group appears to be the most qualified and directly affected party. In structuring the regulation in this manner, FRA has not totally precluded other parties from providing certification based on appropriate testing. However, if a party other than a manufacturer desires to provide the required certification, a waiver of this requirement will be necessary. FRA believes that the individualized review process employed in waiver proceedings, is necessary to assure that the quality of the testing will be sufficient to insure the protection of railroad crew members and railroads passengers.

Another commenter raised a question about the requirement that a railroad obtain a written certification that the glazing material it is installing meets the requirements of this regulation. The commenter was concerned that the language could be interpreted to mean that a written certification must be obtained for each piece of material being installed.

FRA's intent is that a railroad install only those types of glazing materials which meet the requirements of this regulation. To assure that only the prescribed materials are being utilized, FRA believes that it is necessary for a railroad to determine that a particular product which has been selected does qualify for installation. However, it is not necessary that such a determination be made and documented for each piece of glazing material. A determination by the railroad that the given brand or product line distributed by a manufacturer has been tested and has qualified will be sufficient.

FRA agrees that the language of this section does not clearly describe the necessary steps that must be followed and is revising the language to more effectively state the procedures involved. In the revised language, a manufacturer who supplies glazing materials that are intended for use in a locomotive, passenger car or caboose can certify that a given type, brand or product line has been successfully tested in accordance with this appendix. This certification would be sufficient to allow a railroad to install such material in any quantity it desired. If a railroad elected to use different product types from one manufacturer or opted to use the product lines of several manufacturers, it would only be necessary to determine that each type, brand or product line selected was in fact certified by its manufacturer. FRA is not detailing the mechanism by which a railroad should or can assure itself that the manufacturer does certify its particular product. However, FRA is revising the identification markings to be imprinted on each individual unit of glazing material so that it will be possible to ascertain the type of material being installed.

The revised identification procedures are now detailed in subsection (c) of this appendix and require that each individual piece being installed contain a marking to indicate that the material qualifies as either Type I or Type II glazing and that the material was manufactured by a given producer. Additionally, FRA is requiring that the identification marking contain sufficient data so that the type, brand or product line of the manufacturer to which this unit of material belongs can be identified.

Several commenters raised questions about the method proposed by FRA for marking or identifying glazing materials that comply with this regulation. FRA's proposal for the use of a blue circle or blue square was deemed impractical because of the current practice of providing large sheets of material that are subsequently cut into smaller units prior to installation and because the color selected will fade rapidly and become indistinquishable. These commenters noted that many users of the same type of glazing materials which will meet FRA's concepts employ "hot stamping" or imprinting techniques to identify the materials and urged that FRA permit use of these techniques.

FRA's intent was to ensure that the glazing materials are readily identifiable. It now appears that the proposed language is unduly restrictive in accomplishing this goal. Consequently, FRA is deleting the reference to blue circles or blue squares. Additionally, FRA is rewording this provision to provide that material that qualifies as either Type I or Type II glazing must be permanently marked so that it is readily identifiable. However, the exact method of marking the material has not been specified. This will permit manufacturers and installers to convey the necessary information in whatever reasonable fashion is desired. In this way, the use of the "hot stamping" technique or other identification methods can be employed by the affected parties.

It should also be noted that FRA is revising this provision to clearly state that the identification marking must be done in such a manner that the required information is clearly visible once the material has been installed.

The next issue raised by the commenters addressed various aspects of the testing methodology proposed by FRA. Several commenters expressed the belief that FRA should require independent third party observation or verification of the actual test procedures for each product. Although no rationale was provided, FRA assumes that the commenters have some reservations about relying on the quality of manufacturer testing. This concern is also apparently the basis for the suggestion that periodic retesting should be required by FRA.

Adoption of the suggestions that independent third party verification and periodic retesting be required, would improve the quality control assurance levels. However, FRA does not believe that the facts warrant imposition of these additional requirements. FRA's intent is to provide minimum standards and to impose limited testing requirements to assure that materials meet those standards. FRA believes that the proposed requirements and the traditional economic forces of the marketplace will be sufficient to achieve the desired goal for improved safety and that adoption of these suggestions would constitute unnecessary overregulation in this instance.

The commenters urged many revisions in the testing procedures proposed by FRA and institution of additional testing parameters. Standardization of the size of the material and the mounting of the material; change in location for the witness plate; utilization of equivalency impacts; and expansion of the test regime to measure the effects of temperature, humidity, transmissivity and durability were suggested as areas for revision.

FRA believes that these suggested revisions are not appropriate and that additional testing requirements are not needed. FRA did not propose standardized test sizes or mountings because of the wide range of sizes and mountings that currently exist for the equipment that is already in service in the railroad industry. FRA believes that the latitude provided by the proposed regulation is necessary in light of these variables. Although product comparability data may suffer from the absence of the recommended standardization, FRA believes that such data is not essential from the standpoint of this regulation. For similar reasons FRA did not include the additional testing requirements suggested by the commenters. The suggested additions are not essential for evaluating the safety performance of these glazing materials, although they may be useful from the standpoint of the manufacturer or the purchaser of the materials. Accordingly, FRA does not agree that such tests should be required by Federal regulation. The remaining suggestion that FRA permit the use of equivalency impact testing as an alternative to the proposed bullet or cinder block impacts presents a slightly different issue. FRA selected these proposed tests because they are representative of the actual environment in which the materials will be utilized and because FRA perceived a difference of opinion in the technical community over the question of whether true equivalency can be obtained by substituting different test methodologies from those proposed. FRA is prepared to respond favorably to any party who can demonstrate that a substitute test program will provide a truly equivalent test to that being prescribed by FRA. Accordingly, FRA is retaining the proposed procedures.

The commenters addressed the provision relating to the "witness plate" that is used to detect material separation from the sheet of glazing that could impact a person adjacent to the installed window. FRA proposed that this witness plate be installed within six inches of the material being tested. The commenters suggested that FRA permit the witness plate to be located at a distance of up to eighteen inches from the test material. Additionally, one commenter suggested a change in the material specified for use as a witness plate. FRA believes that the six inch distance requirement is necessary since there are many instances in which people will be at this distance from the window when an impact occurs. Injuries, particularly injuries to eyes, are likely to occur if particles of material are dislodged on impact. Consequently, FRA believes that a six inch rather than an

eighteen inch distance between the witness plate and the test material is more appropriate. FRA is revising the technical description for the witness plate material as suggested, by providing for a more easily obtainable type of aluminum.

The final issue raised by the commenters with respect to the testing provisions involves the performance level proposed by FRA for glazing materials used in side facing glazing locations. All of the commenters urged that FRA consider reducing the force levels that were proposed for the cinder block portion of the test procedure. They expressed the belief that it was very unlikely that objects with the mass of a cinder block could strike a side window at the rate of velocity contemplated by FRA. The concern over this issue was intensified by the commenters' belief that compliance with the proposed cinder block test procedure would require that large numbers of frames and ancillary supporting mechanisms be modified and that this would have an adverse impact on the proposed retrofit schedule.

FRA agrees that the proposed cinder block impact speed criterion for side facing glazing location is too stringent. Review of available data suggests that the rate of velocity for the cinder block impact can be reduced without significantly reducing safety. Consequently, FRA is revising this portion of the side window impact testing to require that the material be subjected to an impact when the cinder block is moving at a minimum of 12 feet per second velocity. This impact velocity was selected on the basis of available data on the relative impact energy that glazing can be expected to experience from hand thrown objects. It should be noted, however, that FRA is not altering the proposed bullet impact provisions for testing materials intended for use in side window locations.

Economic Impact

FRA has determined that adoption of this final rule does not constitute a significant regulatory proposal. Therefore, a regulatory analysis under Executive Order 12044 is not required (E. O. 12044, 43 FR 12661, March 24, 1978).

However, FRA did prepare a Regulatory Evaluation of the proposed regulation and has revised that evaluation in light of the comments received and the changes made in the final rule. The resulting cost analysis and cost benefit analysis, prepared in accordance with the DOT's policies for evaluation of regulatory impacts (Regulatory Policies and Procedures, 44 FR 11034, February 26, 1979), have been placed in the public docket for this proceeding.

Environmental Impact

On March 16, 1979, the FRA published (44 FR 16062) revised procedures for insuring full consideration of the environmental impacts of FRA actions as required by the National Environmental Policy Act (42 U.S.C. 4321 *et seq.*), other environmental statutes, executive orders, and DOT Order 5610.113. FRA reviewed the criteria established in those procedures and determined that adoption of this final rule does not constitute a major FRA action which requires an environmental assessment.

In consideration of the foregoing, Title 49 of the Code of Federal Regulations is amended by the addition of a new Part 223 set forth below:

PART 223—SAFETY GLAZING STANDARDS—LOCOMOTIVES, PASSENGER CARS AND CABOOSES

Subpart A—General

Sec.
223.1 Scope.
223.3 Application.
223.5 Definitions.
223.7 Responsibility.

Subpart B—Specific Requirements

223.9 Requirements for new or rebuilt equipment.
223.11 Requirements for existing locomotives.
223.13 Requirements for existing cabooses.
223.15 Requirements for existing passenger cars.
223.17 Identification of equipped locomotives, passenger cars and cabooses.
Appendix A—Certification of Glazing Materials.

Authority: Sec. 202, 84 Stat. 971 (45 U.S.C. 431); sec. 1.49(n) of Title 49 of the Code of Federal Regulations.

Subpart A—General

§ 223.1 Scope.

This part provides minimum requirements for glazing materials in order to protect railroad employees and railroad passengers from injury as a result of objects striking the windows of locomotives, caboose and passenger cars.

§ 223.3 Application.

(a) This part applies to railroads that operate rolling equipment on standard gauge track that is a part of the general railroad system of transportation.

(b) This part does not apply to—

(1) Locomotives, cabooses, and passenger cars that operate only on track inside an installation that is not part of the general railroad system of transportation;

(2) A rapid transit railroad that operates only on track used exclusively for short haul rapid transit passenger service in a metropolitan or suburban area; and

(3) Locomotives, passenger cars and cabooses that are historical or antiquated equipment and are used only for excursion, educational, recreational purposes or private transportation purposes.

(4) Locomotives that are used exclusively in designated service as defined in § 223.5(m).

§ 223.5 Definitions.

As used in this part—

(a) "Locomotive" means a self-propelled unit of equipment designed primarily for moving other equipment. It does not include self-propelled passenger cars.

(b) "Caboose" means a car in a freight train intended to provide transportation for crew members.

(c) "Passenger Car" means a unit of rolling equipment intended to provide transportation for members of the general public and includes self-propelled cars designed to carry baggage, mail, express and passengers.

(d) "Yard" is a system of auxiliary tracks used exclusively for the classification of passenger or freight cars according to commodity or destination; assembling of cars for train movement; storage of cars; or repair of equipment.

(e) "Yard Locomotive" means a locomotive that is operated only to perform switching functions within a single yard area.

(f) "Yard Caboose" means a caboose that is used exclusively in a single yard area.

(g) "Rebuilt Locomotive, Caboose or Passenger Car" means a locomotive, caboose or passenger car that has undergone overhaul which has been identified by the railroad as a capital expense under Interstate Commerce Commission accounting standards.

(h) "Windshield" means the combination of individual units of glazing material of the locomotive, passenger car, or caboose that are positioned in an end facing glazing location.

(i) "End Facing Glazing Location" means any location where a line perpendicular to the plane of the glazing material makes a horizontal angle of 50 degrees or less with the centerline of the locomotive, caboose or passenger car. Any location which, due to curvature of the glazing material, can meet the criteria for either a front facing location

or a side facing location shall be considered a front facing location.

(j) "Side Facing Glazing Location" means any location where a line perpendicular to the plane of the glazing material makes an angle of more than 50 degrees with the centerline of the locomotive, caboose or passenger car.

(k) "Certified Glazing" means a glazing material that has been certified by the manufacturer as having met the testing requirements set forth in Appendix A of this part and that has been installed in such a manner that it will perform its intended function.

(l) "Emergency Opening Window" means that segment of a side facing glazing location which has been designed to permit rapid and easy removal during a crisis situation.

(m) "Designated Service" means exclusive operation of a locomotive under the following conditions;

(1) The locomotive is not used as an independent unit or the controlling unit is a consist of locomotives except when moving for the purpose of servicing or repair within a single yard area;

(2) The locomotive is not occupied by operating or deadhead crews outside a single yard area; and

(3) The locomotive is stenciled "Designated Service—DO NOT OCCUPY".

§ 223.7 Responsibility.

(a) A railroad that fails to comply with any requirement of this part with respect to any locomotive, passenger car or caboose which it operates is subject to a civil penalty as provided in Appendix B of this part. Each day of violation constitutes a separate offense.

(b) A railroad may petition the Federal Railroad Administrator for exemption from any or all requirements prescribed in this part. Each petition shall be filed in accordance with Part 211 of this chapter.

Subpart B—Specific Requirements

§ 223.9 Requirement for new or rebuilt equipment.

(a) Locomotives, including yard locomotives, built or rebuilt after June 30, 1980, must be equipped with certified glazing in all windows.

(b) Cabooses, including yard cabooses, built or rebuilt after June 30, 1980, must be equipped with certified glazing in all windows.

(c) Passenger cars, including self-propelled passenger cars, built or rebuilt after June 30, 1980, must be equipped with certified glazing in all windows and at least four emergency opening windows.

§ 223.11 Requirement for existing locomotives.

(a) Locomotives, other than yard locomotives, built or rebuilt prior to July 1, 1980, which are equipped in the forward and rearward end facing glazing locations of the windshield with a glazing material that meets the criteria for either portion of the impact testing required for a Type I test under the provisions of Appendix A of this part, will not require the installation of certified glazing in the windshield location except to replace windshield glazing material that is broken or damaged.

(b) Locomotives, other than yard locomotives, built or rebuilt prior to July 1, 1980, which are equipped in all side facing glazing locations with a glazing material that meets the criteria for either portion of the impact testing required for a Type II test under the provisions of Appendix A of this part, will not require the installation of certified glazing in the sidefacing glazing location except to replace sidefacing glazing material that is broken or damaged.

(c) Except for yard locomotives and locomotives equipped as described in paragraphs (a) and (b), locomotives built or rebuilt prior to July 1, 1980, shall be equipped with certified glazing in all windows after June 30, 1983.

(d) Each locomotive subject to the provisions of paragraph (c) of this section, which, as a result of an act of vandalism has a window that is broken or damaged so that the window fails to permit good visibility,

(1) Shall be placed in Designated Service within 48 hours of the time of breakage or damage or

(2) Shall be removed from service until equipped with certified glazing in the following manner:

(i) If the broken or damaged window is a part of the windshield, all of the forward and rearward end facing glazing locations must be replaced with certified glazing.

(ii) If the broken or damaged window is a part of the sidefacing window, all of the sidefacing glazing locations must be replaced with certified glazing.

§ 223.13 Requirements for existing cabooses.

(a) Cabooses, other than yard cabooses, built or rebuilt prior to July 1, 1980, which are equipped in the forward and rearward end facing glazing locations of the windshield with a glazing material that meets the criteria for either portion of the impact testing required for a Type I test under the provisions of Appendix A of this part, will not require the installation of certified glazing in the windshield location except to replace windshield glazing material that is broken or damaged.

(b) Cabooses, other than yard cabooses, built or rebuilt prior to July 1, 1980, which are equipped in all side facing glazing locations with a glazing material that meets the criteria for either portion of the impact testing required for a Type II test under the provisions of Appendix A of this part, will not require the installation of certified glazing in the sidefacing glazing locations except to replace sidefacing glazing material that is broken or damaged.

(c) Except for yard cabooses and cabooses equipped as described in paragraphs (a) and (b), cabooses built or rebuilt prior to July 1, 1980, shall be equipped with certified glazing in all windows after June 30, 1983.

(d) Each caboose subject to the provision of paragraph (c) of this section, which, as a result of an act of vandalism, has a window that is broken or damaged so that the window fails to permit good visibility shall be equipped with certified glazing in the following manner:

(1) If the broken window is a part of the windshield, all of the forward and rearward end facing glazing locations must be replaced with certified glazing within 30 days of the date of breakage or damage.

(2) If the broken window is a part of the sidefacing window, all of the sidefacing glazing locations must be replaced with certified glazing within 30 days of the date of breakage.

§ 223.15 Requirements for existing passenger cars.

(a) Passenger cars built or rebuilt prior to July 1, 1980, which are equipped in the forward and rearward end facing glazing locations of the windshield with a glazing material that meets the criteria for either portion of the impact testing required for a Type I test under the provisions of Appendix A of this part will not require the installation of certified glazing in the windshield location except to replace windshield glazing material that is broken or damaged.

(b) Passenger cars built or rebuilt prior to July 1, 1980, which are equipped in the sidefacing glazing locations with a glazing material that meets the criteria for either portion of the impact testing required for a Type II test under the provisions of Appendix A of this part, will not require the installation of certified glazing except to replace sidefacing glazing material that is broken or damaged.

(c) Except for passenger cars described in paragraphs (a) and (b),

passenger cars built or rebuilt prior to July 1, 1980, shall be equipped with certified glazing in all windows and a minimum of four emergency windows after June 30, 1983.

(d) Each passenger car subject to the provisions of paragraph (c) of this section which as a result of an act of vandalism, has a window that is broken or damaged so that the window fails to permit good visibility shall be equipped with certified glazing in the following manner:

(1) When the broken window is a part of the windshield, all of the forward and rearward end facing glazing locations shall be replaced with certified glazing within 30 days of breakage.

(2) When the broken window is a part of the sidefacing window, the glazing in that individual sidefacing glazing location shall be replaced with certified glazing within 30 days of the date of breakage.

§ 223.17 Identification of Equipped Locomotives, Passenger Cars and Cabooses.

Each locomotive, passenger car and caboose that is fully equipped with certified glazing shall be stenciled on an interior wall as follows: "Fully equipped FRA Part 223 glazing" or similar words conveying that meaning in letters at least 1 inch high.

Appendix A—Certification of Glazing Material

As provided in this part, certified glazing materials installed in locomotives, passenger cars, or cabooses must be certified by the glazing manufacturer in accordance with the following procedures:

a. General Requirements

(1) Each manufacturer that provides glazing materials, intended by the manufacturer for use in achieving compliance with the requirements of this part, shall certify that each type of glazing material being supplied for this purpose has been succcessfully tested in accordance with this appendix and that test verification data is available to a railroad or to FRA upon request.

(2) The test verification data shall contain all pertinent original data logs and documentation that the selection of material samples, test set-ups, test measuring devices, and test procedures were performed by qualified personnel using recognized and acceptable practices and in accordance with this appendix.

b. Testing Requirements

(1) The material to be tested (Target Material) shall be a full scale sample of the largest dimension intended to be produced and installed.

(2) The Target Material shall be representative of production material and shall be selected on a documented random choice basis.

(3) The Target Material shall be securely and rigidly attached in a fixture so that the fixture's own characteristics will not induce test errors.

(4) The Target Material so selected and attached shall constitute a Test Specimen.

(5) The Test Specimen will then be equipped with a Witness Plate that shall be mounted parallel to and at a distance of six inches in back of the Target Material. The Witness Plate shall have at least an area which will cover the full map of the Target Material.

(6) The Witness Plate shall be an unbacked sheet of maximum 0.006 inch, alloy 1100 temper O, aluminum stretched within the perimeter of a suitable frame to provide a taut surface.

(7) The Test Specimen will be positioned so that the defined projectile impacts it at an angle of 90 degrees to the Test Specimen surface.

(8) The point of impact of the defined projectile will be within a radius of 3" of the centroid of the Target Material.

(9) Velocity screens or other suitable velocity measuring devices will be positioned so as to measure the impact velocity of the defined projectile within a 10% accuracy tolerance, with test modifications made to guarantee that the stipulated minimum velocity requirements are met.

(10) The Test Specimen for glazing material that is intended for use in end facing glazing locations shall be subjected to a Type I test regimen consisting of the following tests:

(i) Ballistic Impact in which a standard 22 caliber long rifle lead bullet of 40 grains in weight impacts at a minimum of 960 feet per second velocity.

(ii) Large Object Impact in which a cinder block of 24 lbs minimum weight with dimensions of 8 inches by 8 inches by 16 inches nominally impacts at the corner of the block at a minimum of 44 feet per second velocity. The cinder block must be of composition referenced in American Society for Testing and Materials (ASTM) Specification C33L or ASTM C90.

(11) The Test Specimen for glazing material that is intended for use only in side facing glazing locations shall be subjected to a Type II test regimen consisting of the following tests:

(i) Ballistic Impact in which a standard 22 caliber long rifle lead bullet of 40 grains in weight impacts at a minimum of 960 feet per second velocity.

(ii) Large Object Impact in which a cinder block of 24 lbs minimum weight with dimensions of 8 inches by 8 inches by 16 inches nominally impacts at the corner of the block at a minimum of 12 feet per second velocity. The cinder block must be of the composition referenced in ASTM C33L or ASTM C90.

(12) Three different test specimens must be subjected to the ballistic impact portion of these tests.

(13) Two different test specimens must be subjected to the large object impact portion of these tests.

(14) A material so tested must perform so that:

(i) there shall be no penetration of the back surfaces (side closest to Witness Plate) of the Target Material by the projectile. Partial penetration of the impact (front) surface of the Target Material does not constitute a failure; and

(ii) there shall be no penetration of particles from the back side of the Target Material through the back side of the prescribed Witness Plate.

(15) Test specimens must consecutively pass the required number of tests at the required minimum velocities. Individual tests resulting in failures at greater than the required minimum velocities may be repeated but a failure of an individual test at less than the minimum velocity shall result in termination of the total test and failure of the material.

(16) After successful completion of the prescribed set of required consecutive tests, a manufacturer may certify in writing that a particular glazing material meets the requirements of these standards.

c. Material Identification

(1) Each individual unit of glazing material shall be permanently marked, prior to installation, to indicate that this type of material has been successfully tested as set forth in this appendix and that marking shall be done in such a manner that it is clearly visible after the material has been installed.

(2) Each individual unit of a glazing material that has successfully passed the Type I testing regimen shall be marked to indicate:

(i) "FRA Type I" material;

(ii) the manufacturer of the material;

(iii) the type or brand identification of the material.

(3) Each individual unit of a glazing material that has successfully passed the Type II testing regimen shall be marked to indicate:

(i) "FRA Type II" material;

(ii) the manufacturer of the material;

(iii) the type or brand identification of the material.

Authority: Sec. 202, 84 Stat. 971 (45 U.S.C. 431); Sec. 1.49(n) of the regulations of the Office of the Secretary of Transportation, 49 CFR 1.49(n).

Issued in Washington, D.C. on December 19, 1979.

John M. Sullivan,

Administrator.

[FR Doc. 79-39616 Filed 12-28-79; 8:45 am]

BILLING CODE 4910-06-M

federal register

Monday
December 31, 1979

Part III

Department of the Treasury

Office of Revenue Sharing

Revenue Sharing Regulations

DEPARTMENT OF TREASURY

Office of Revenue Sharing

31 CFR Part 51

Revenue Sharing Regulations

AGENCY: Office of Revenue Sharing, Treasury Department.

ACTION: Proposed rule.

SUMMARY: This proposed rule contains: (1) a new set of proposed regulations implementing the prohibition against discrimination on the basis of handicapped status, as provided in section 504 of the Rehabilitation Act of 1973 (section 51.55). The proposed regulation is required pursuant to Executive Order 11914 "Nondiscrimination With Respect to the Handicapped in Federally Assisted Programs." Comments are requested concerning the preparation of a regulatory analysis, (2) proposed age discrimination regulations under the Age Discrimination Act of 1975. The proposed age discrimination regulations are required pursuant to the Age Discrimination Act of 1975 and the HEW Government-wide Age Discrimination Regulations. A regulatory analysis has been determined to be unnecessary; and (3) revisions to existing regulations which make technical and procedural changes. The revisions are primarily for clarification and to conform certain regulations to existing operating procedures. A regulatory analysis has been determined to be unnecessary.

DATES: Written comments must be received on or before February 29, 1980.

ADDRESSES: Send comments to: Director, Office of Revenue Sharing ("ORS"), cc: Treasury Department, Washington, D.C. 20226. Taped copies of Subpart E are available upon request.

FOR FURTHER INFORMATION CONTACT: Arnold Intrater, Chief Counsel for Revenue Sharing or Jacqueline L. Jackson, a staff attorney at 202-634-5182.

SUPPLEMENTARY INFORMATION:

Background

On October 10, 1976, the State and Local Fiscal Assistance Amendments of 1976 (Pub. L. 94-488) were enacted to amend the State and Local Fiscal Assistance Act of 1972 (Pub. L. 92-512) which established the General Revenue Sharing program. The amendments were effective January 1, 1977 and necessitated the complete revision of the revenue sharing regulations (31 CFR, part 51). The regulations were published in final form to be effective October 1, 1977 (except for subpart E). Subpart E of the regulations was published in interim form, has not been issued in final form. Further, specific regulations concerning handicapped discrimination and age discrimination have yet to be issued. It was also determined that a complete review of all regulations would be useful prior to publishing a final rule with respect to subpart E. Accordingly, the proposed rule sets forth the complete 31 CFR part 51.

The regulations are divided into seven subparts. Subpart A, "General Information," contains definitions and other provisions applicable to all subparts (unless otherwise stated). Subpart B, "Assurance, Reports, Public Participation and Public Hearings," sets forth the assurance, reporting and public hearing requirements placed upon State and local governments which receive revenue sharing funds. Subpart C, "Computation and Adjustment of Entitlement Funds," sets forth the technical provisions concerning the data and formulae used for payment of entitlement funds. Subpart D, "Prohibitions and Restrictions on Use of Funds," sets forth the restrictions and prohibitions on the use of revenue sharing funds other than the prohibitions against discrimination. Subpart E, "Nondiscrimination by State and Local Governments Receiving Entitlement Funds," sets forth the prohibitions against discrimination by recipient governments, the exceptions thereto and the procedures to be used to achieve compliance. Subpart F, "Fiscal Procedures and Auditing" sets forth the auditing requirements and fiscal procedures concerning expenditure of revenue sharing funds. Finally, Subpart G, "Proceedings for Reduction in Entitlement, Withholding, Suspension, or Repayment of Funds," sets forth the procedures for administrative hearings to redress violations of the provisions of the Revenue Sharing Act and regulations. The following is a section-by-section analysis of the major proposed amendments to the regulations contained in 31 CFR, part 51.

Subpart A—General Information

Section 51.0 Scope and application of regulations. On April 14, 1978, the Office of Revenue Sharing (ORS) published an administrative ruling concerning § 51.0(b) "savings clause," (Administrative Ruling 79-1, March 29, 1979). Confusion had arisen as to what regulations governed administrative complaints filed with the ORS prior to the 1976 amendments. Complaints filed prior to the 1976 amendments and violations occurring and ending prior to the amendments were to be handled under regulations then in effect. The procedures in effect after January 1, 1977 cover complaints filed on or after January 1, 1977 and violations continuing thereafter. Because of the passage of time, few if any complaints concerning pre-1977 violations remain unresolved today. Any that might exist are likely to be of an ongoing nature. Accordingly, the Director proposes to amend § 51.0(b) to provide that all pending pre-1977 administrative proceedings will be resolved under current procedures.

51.2 Definitions. A new § 51.2(h) is proposed to add a definition of the term "funded." This definition was contained in Subpart E, but has been determined to have general applicability to all provisions of this part.

The proposed definition of "lobbying" § 51.2(m) would eliminate the reference to § 51.44 and place the definition in its proper place.

The definitions of "Generally accepted auditing standards and Independent public accountant," have been placed in a new definition section contained in Subpart F. Accordingly, the remaining definitions are redesignated.

The proposed definition of "program and activity" § 51.2(l) has been added from Subpart E because it was determined to have general applicability to all provisions of this part. The definition, presently contained in § 51.51(c) of the regulations was amended on April 2, 1979 (4 CFR 19191) to conform it with the definition contained in regulations implementing the Crime Control and Safe Streets Act of 1968 (42 USC 3701 *et seq.*). The non-discrimination provisions under that Act are substantially similar to those under the Revenue Sharing Act. The regulation (28 CFR 42 202(g)) defined program or activity in a manner which we determined to be appropriate. The proposed rule contains that definition further clarified to encompass secondary recipients.

Proposed § 51(n) would add a new definition of secondary recipient. Presently there is no definition of secondary recipient. Section 51.4 merely states that the secondary recipient shall comply with the restrictions and prohibitions contained in the Act but fails to define the term. We proposed to define a secondary recipient as any entity which receives entitlement funds by grant, contract or other arrangement for the purpose of providing a service the recipient government would otherwise provide or for the purpose of providing such entity with general financial assistance.

The definition includes other governments, private nonprofit

organizations and profit-making businesses which receive revenue sharing funds and use them in a manner which impacts on the citizens of the primary recipient government. The definition specifically excludes the procurement of goods. It does not exclude construction contractors. The construction contractor, however, is a hybrid situation between the purchase of an object (a building or a road) and the provision of a service the government would otherwise provide. Since the construction contractor can be compared to the department of public works of a recipient government, it was determined that the contractor should be included as a secondary recipient.

Section 51.3 Procedure for effecting compliance. This section has been completely revised to provide general guidance concerning compliance procedures and to eliminate the confusing reference to Subpart E. Since the provisions of this section apply to violations of Subparts B, D and F, the provisions must be broad enough to encompass violations in operating procedures. Section 125 of the Act requires the Secretary to promulgate regulations establishing reasonable and specific time limits for the conduct of an investigation and issuance of a finding and for the conduct of compliance audits and reviews. It is the position of the ORS that only section 125(2) requiring reasonable and specific time limits for the conduct of audits and reviews (including investigations of allegations) relating to possible violations of the provisions of the Act, applies to violations other than subpart E. Accordingly, the issuance of a finding is not required within 90 days from receipt of a complaint or other information. This proposed rule is designed to provide required guidance without eliminating the flexibility needed to achieve compliance with varying violations of the Act.

Proposed § 51.3(e) clarifies the procedure for delay of payment where a recipient government fails to comply with the reporting or assurance requirements of the Act. The reporting requirement referred to includes the submission of reports requested by the Director to determine compliance with the provisions of the Act. Entitlement funds constructively waived are not returned to a recipient government, but become a part of the entitlement of the next highest level of government.

Section 51.4 Transfer of funds to secondary recipients. This section is proposed to clarify the application of the prohibitions and restrictions, contained in the Act and regulations, to secondary recipients.

Section 51.5 Time periods. Proposed § 51.5(a) would clarify that the time period for an event will not begin to run until the appropriate party receives notice of the event. For example, a recipient government is given ten days to request an administrative hearing or suffer the suspension of entitlement funds. The ten-day period begins not with the issuance of the determination by the Director, but with the receipt of notice of the determination by the recipient government.

Proposed § 51.5(b) provides that time periods of ten days or less refer to working days not including weekends. Time periods of ten days or more refer to calendar days including weekends.

Section 51.6 Effect of State or local law. The proposed rule adds a new section 51.6 "effect of State or local law" which provides that any conflicting State or local law, that substantially impedes compliance by a recipient government with the provisions of the Act or regulations, will not be a valid defense for failure to comply with the provisions of the Act. This section applies to all restrictions and prohibitions including the audit requirements and nondiscrimination prohibitions.

Section 51.7 Applicability of other Federal laws. A new § 51.7 is proposed which would state that general laws relating to Federal assistance programs are not applicable unless specifically provided in the Revenue Sharing Act. It has always been the position of the ORS that only the Acts specifically mentioned within the Revenue Sharing Act are applicable to the revenue sharing program. This position has support in case law. In *Carolina Action v. Simon,* (552 F. 2d. 295, (1975)) the Court held that the National Environmental Policy Act (42 U.S.C. sections 4321 *et seq.)* was not applicable to revenue sharing. In the latest case, *Goolsby v. Blumenthal* (590 F. 2d. 1369 (1979)), the Court held that the Relocation Assistance and Real Property Acquisition Policies Act of 1970 (42 U.S.C. sections 460 *et seq.)* was not applicable to revenue sharing.

The proposed section also provides that the criminal code of the United States is applicable to criminal offenses relating to the expenditure of revenue sharing funds.

Subpart B—Assurances, Reports, Public Participation and Public Hearings

Section 51.10 Definitions. The definitions of budget and budget summary are revised for clarification. The definitions of entitlement funds and recipient governments are eliminated as redundant because they are included in § 51.2 of Subpart A.

Section 51.11 Reports to the Director, assurances procedures for effecting compliance. Proposed § 51.11(c) would amend the current provision to achieve greater clarity. The section would distinguish between the procedures for effecting compliance for public hearing violations and the procedures for effecting compliance for reporting and assurance violations.

Section 51.13 Proposed use hearing. Section 51.13 is proposed to be amended to clarify that a waiver of the proposed use hearing must be requested by the recipient government and the request must be accompanied by a cost estimate of the unavoidable expenses. Further, the waiver must be approved by the Director prior to the appropriation of revenue sharing funds by the recipient government.

Section 51.14 Budget hearing. Proposed § 51.14(b) revises the provision for an alternative procedure for a budget hearing to eliminate the requirement that the recipient government submit a written assurance prior to the use of the alternative procedure. The State or local public hearing procedure may be used automatically and compliance with those procedures need only be proved when questioned pursuant to a compliance review or a complaint.

Proposed § 51.14(e), "Waiver of newspaper publication, alternative forms," would clarify the requirements for the waiver of newspaper publication. Those requirements are the same as the requirements for the waiver of the proposed use hearing and publication requirements.

Section 51.15 Amendments or modification to enacted budget. The proposed rule amends this section to clarify what constitutes a major change. To be a major change, the modification to the budget must be both 25% of the total budget and involve at least $1,000.

Section 51.18 Legal notice rules not applicable. The proposed rule amends this section to provide that newspaper publication required with respect to public hearings and the use report may be in the form of a newspaper advertisement or article. The publication must however include all of the required information.

Subpart C—Computation and Adjustment of Entitlement Funds

Section 51.20 Data. Section 51.20(c) is proposed to be amended to clarify the special rule concerning intergovernmental transfers for less than one-year entitlement periods.

Section 51.21 Data affected by a major disaster. The proposed rule would amend § 51.21(c), "Eligibility requirements," to clarify that at the end of the 60-month period the data used for the initial allocation of revenue sharing funds will also be used for the final allocation of these funds. A new § 51.21(g) is proposed to provide that the post-disaster data factor will be used for the first entitlement period after the end of the 60-month period.

Section 51.25 Waiver of entitlement, nondelivery of checks; insufficient data. Proposed § 51.25(b) "Constructive waiver," would clarify that a recipient government will be constructively waived for failure to comply with the reporting and assurance requirements of the Act and regulations. The reporting requirement includes submission of reports upon request of the Director or her designate to determine compliance with the provision of Subparts B, E or F.

Section 51.27 State to maintain transfers to local governments. The proposed rule would amend this section to remove all reference to pre-January 1, 1977 rules because they are obsolete. Proposed § 51.27(e), "Adjustment where new taxing powers are conferred," would also clarify the effect upon the States of conferring new taxing powers upon local governments.

Current § 51.27(e), "Report by Governor," would be amended by proposed § 51.27(g) "Computation by the ORS". The new section would reflect the current operating procedure of obtaining data concerning maintenance of effort from the Bureau of the Census.

Section 51.30 Adjustment of maximum and minimum per capita entitlement. Proposed § 51.30(b)(4) would add a definition of the "50 percent rule" derived from section 108(b)(6)(c) of the Act. That rule provides that no unit of local government may receive a revenue sharing payment which is more than 50 percent larger than that government's adjusted taxes and intergovernmental transfers received by it (other than revenue sharing funds).

Section 51.32 Population of Indian Tribes and Alaskan Native Villages. The proposed rule would add a new § 51.32 to define the population of Indian tribes and Alaskan native villages for revenue sharing purposes as the resident population of the tribe or village as of July 1, 1977, as determined by the Bureau of Indian Affairs.

Subpart D—Prohibitions and Restrictions on Use of Funds

Section 51.40 Matching funds. With the 1976 amendments, the prohibition against the use of revenue sharing funds for matching purposes, was repealed. Since a recipient government has 24 months in which to use, obligate or appropriate revenue sharing funds, revenue sharing funds received in the last quarter of 1976 may not have been spent until after 1978. Accordingly, the current regulations maintain the restrictions concerning matching with the proviso that they do not apply to revenue sharing funds received after January 1, 1977. Since all pre-1977 funds are likely to have been spent, the proposed rule would eliminate the provision and merely state that revenue sharing funds may be used for matching purposes after January 1, 1977.

Section 51.41 Permissible expenditures for units of local government. The 1976 amendments also eliminated the priority expenditure restrictions for local governments. For the same reason as stated above, the proposed rule would eliminate the current provision and would state that revenue sharing funds may be used by local governments for any purpose permissible under State or local law.

Section 51.43 Restriction on expenditures by Indian tribes and Alaskan native villages. The proposed rule would amend paragraph (b) to clarify that entitlement payments to Indian tribes and Alaskan native villages are to be spent for the benefit of the members of the tribe or village even where that tribe or village extends into two or more county areas. A new proposed paragraph (c) is added to make it clear that an Indian tribe or Alaskan native village, which expends its revenue sharing funds for the benefit of its members, will not be found in noncompliance with the nondiscrimination prohibitions of Subpart E.

Section 51.44 Lobbying. The proposed rule would amend this section to eliminate the definition of lobbying and place it in § 51.2, the definitions section.

Section 51.45 Use of entitlement funds for debt retirement. The proposed rule would amend this section to clarify the current rule that the restrictions on use of entitlement funds for debt retirement have been eliminated, except that the proceeds of indebtedness must have been spent in compliance with the provisions of Subparts D and E.

Subpart E—Nondiscrimination by State and Local Governments Receiving Entitlement Funds

Section 51.51 Definitions. The proposed rule would amend this section to add definitions of the terms "Attorney General," "complaint," "Determination," "noncompliance," and "notification of noncompliance." The section would amend the definitions of "compliance review," "finding," "funded," (which were recently deleted as stated with respect to § 51.2), "holding," "investigation" and "program or activity" to provide greater clarity. The definitions of age discrimination, handicapped status discrimination and religious discrimination are eliminated because they are unnecessary.

Section 51.52 Discrimination prohibited. The proposed rule would amend § 51.52(a) to provide greater clarity and to identify the effective date of the Age Discrimination Act of 1975, and therefore the prohibition against age discrimination under the Revenue Sharing Act. This section would also amend the reference to religious discrimination to reflect the exclusion of religious discrimination from coverage under Title VI of the Civil Rights Act of 1964.

Section 51.52(b) is proposed to be reorganized for greater clarity. The types of discrimination (e.g., discrimination in employment or the provision of services is clearly identified in the first sentence of each subsection). It is to be particularly emphasized that discrimination on the basis of handicapped status is prohibited not only in employment, but also in the provision of services and with respect to the accessibility of facilities. The proposed rule also reflects that discrimination on the basis of age applies only to the provision of services. Section 304(c)(1) of the Age Discrimination Act of 1975 specifically exempts employment discrimination on the basis of age from its coverage and therefore from coverage under the Revenue Sharing Act. Section 122 of the Revenue Sharing Act provides that age discrimination under the Age Discrimination Act of 1975 is prohibited. Discrimination on the basis of religion, due to the exclusions and exemptions contained in the Civil Rights Act of 1964 and the Civil Rights Act of 1968, does not apply to the provision of services and is limited in its application to employment. The proposed regulation reflects these exemptions.

A new §51.52(b)(1) is proposed to reflect the "effects test" of *Lau v. Nichols*, 414 U.S. 563, 94 S. Ct. 786, 39 L. Bd. 2d J (1974), the leading case in the area of discrimination in the provision of services.

A new § 51.52(b)(5) is proposed to prohibit a recipient government from retaliating against or intimidating a complaint or other individual assisting the ORS in its investigation. A new § 51.52(b)(6) is proposed to prohibit the use of an unvalidated height or weight

requirement or other selection device, which has an adverse impact on a protected class.

Interim § 51.52(b)(5) was deleted in response to comment that it confused the difference between voluntary affirmative action and required remedial action. The section was further deemed unnecessary because both affirmative action and remedial action are fully covered in later sections.

Section 51.53 Employment discrimination. Section 51.53(a), "Employment practices," is proposed to provide a more extensive statement of the employment practices covered by this subpart.

Section 51.53(b), "Employee selection procedures," was amended in interim form on September 11, 1978 (43 FR 40223). The amended regulation adopted the Uniform Guidelines on Employee Selection Procedures as adopted by the Equal Employment Opportunity Commission, the Civil Service Commission, the Department of Labor and the Department of Justice on August 25, 1978 (43 FR 38290). The proposed rule would continue the adoption of the guidelines.

Proposed § 51.53(c) "Recruitment practices of recipient governments," proposes to require affirmative action in recruitment procedures where racial, ethnic or sex groups have been denied employment opportunities or are underutilized in a job classification.

Proposed § 51.53(d) "Pre-employment inquiries," would caution a recipient government to review its pre-employment application forms and other inquiries to be sure that the questions asked are not designed to elicit information which could be used to foster prohibited discrimination.

Current § 51.53(d) "Self-evaluation," is proposed to be redesignated § 51.53(e) and retitled "Self-review." As proposed, the section would clarify that recipient governments should review their employment policies and correct any procedures or policies which have the effect of denying equal employment opportunities. Current § 51.53(e) is deleted as redundant since it will be covered by proposed § 51.61.

Section 51.54, "Discrimination on the basis of sex," is proposed to be retitled "Employment discrimination on the basis of sex." The proposed rule further amends this section to delete the current provisions and adopt the EEOC guidelines. The same approach is proposed for §§ 51.57 and 51.58, discrimination on the bases of national origin and religion, respectively. When the regulations are published in final form, copies of all EEOC guidelines adopted by the ORS will be published as appendices.

Section 51.55 Discrimination With Respect To a Qualified Handicapped Individual. The 1976 amendments added discrimination on the basis of handicapped status, as provided in section 504 of the Rehabilitation Act of 1973, as amended to the classes of persons protected by the Act. Executive Order 11914 entitled, "Nondiscrimination With Respect to the Handicapped In Federally Assisted Programs," and the HEW Guidelines implementing the Executive Order (43 FR 2132, January 13, 1978), required Federal agencies with section 504 responsibility to issue proposed regulations within 90 days of the effective date of the Guidelines. The ORS published its proposed regulations on April 14, 1978 (43 FR 15735).

Seventeen comments were received on the proposed rule. These comments will be discussed below as part of the section-by-section analysis of the revisions to the proposed rule. The regulations are republished in proposed form because of the extensive changes made to the initial proposed rule.

Several comments were received, primarily recipient government or their associations, which expressed concern about the cost of complying with the requirements of the proposed rule. Small recipient governments particularly are concerned about the financial burden of compliance. The comments further suggested that the mood across the country, expressed by the passage of "Proposition 13" in California and the New Jersey "cap law", requires local governments to restrict spending and should be taken into account in the implementation of the prohibition against discrimination on the basis of handicap. The Director is sympathetic to the cost of implementation of section 504. Executive Order 11914, however, limits the ability of the ORS to make any amendments to the substantive prohibitions to reduce the cost of implementation. Sections 1 and 2 of the Executive Order require that in matters of substance, ORS regulations must be consistent with the HEW guidelines for determining what are discriminatory practices.

Further, recipient governments are reminded that emphasis is to be placed on reasonableness. Only qualified handicapped individuals are protected from discrimination. A qualified handicapped individual is defined as one who can be employed or otherwise benefit from a program or activity with reasonable accommodation. Any action which would create an undue hardship on a recipient government (on the basis of cost or otherwise) would not be reasonable and therefore, is not required. Further, in the area of accessibility of facilities, which is fully discussed below, the proposed regulation places emphasis upon making programs and activities accessible, requiring restructuring of the facilities themselves only as a last resort. Accordingly, the cost of compliance will not be as great as expected by some recipient governments.

It should also be understood that there are competing interests involved, in that handicap discrimination (like racial and sex discrimination, fifteen or twenty years ago) is so far-reaching and pervasive that decisive steps must be taken in order to bring the handicapped into the mainstream of society. The goal of eliminating handicap discrimination has been determined by the Congress to be worth the cost of implementing the remedies. Concern for the burden placed upon small recipient governments is, however, expressed in several sections of the regulation which exempt recipient governments that employ fifteen or fewer full or part-time employees from certain administrative requirements. Further, weakening of the requirements would conflict with the Federal policy of vigorous enforcement of section 504.

Several comments were received, which suggested that the ORS provide additional funds to recipient governments to implement section 504. The ORS does not have statutory authority to provide additional funding for implementation of section 504. Entitlement payments of recipient governments are determined by a strict statutory formula and the program is funded accordingly. Even if additional revenue sharing funds were allocated for enforcement of this section, there is no guarantee that the funds would be spent for the purpose. Nor can a recipient government be required to spend its revenue sharing funds for a particular purpose as under categorical grant programs. Recipient governments may spend their revenue sharing funds for any purpose which is permissible under State or local law so long as that does not conflict with Federal law.

Several comments were received, which suggested that because revenue sharing funds support so many different kinds of programs and activities, the revenue sharing regulations should contain specific provisions proscribing specific recipient government policies and procedures with regard to handicapped status discrimination, particularly in the areas of education, housing, transportation and public safety. HEW, as lead agency, has acted

through the review process to ensure that other Federal agencies issue regulations consistent with its own. Accordingly, it is not anticipated that revenue sharing regulations will conflict with those published by the departments or agencies with primary responsibility for the areas of education, housing, transportation and public safety. The Director will await the publication of all regulations in these areas before resolving the issue of whether or not to incorporate those regulations. Other options might be to develop revenue sharing regulations in these areas or to provide specific guidance through some other means, such as interpretive rulings. The problem is particularly serious in the area of transportation where the potential costs are so great. The Director again wishes to emphasize the fact that the ORS Office provides financial assistance directly to governments which may use funds for any and all purposes which are permissible under local law. For this reason, the regulations should probably be as general as possible.

Several comments were received, which addressed the issue of the jurisdiction of the ORS based on funding. The nondiscrimination prohibition applies to all programs and activities of recipients of revenue sharing funds unless they can prove by clear and convincing evidence that the programs or activities in question were not funded in whole or in part with revenue sharing funds, as provided in section 122(a)(2) of the Act. Some comments were received, which suggested that the exception causes section 504 to apply only to programs and activities directly funded with revenue sharing funds. The questions of funding and jurisdiction are complex and currently under review in their application to the whole of subpart E, Nondiscrimination. Clearly, however, the issue of funding is one in which the burden of proof is placed upon the recipient government.

The Supreme Court recently handed down the decision in *Southeastern Community College v. Davis* (47 LW 4689, June 12, 1979). The Court held that the College was not required to substantially lower its standards for participation in its nursing school in order to admit an individual with a severe hearing disability. HEW has concluded that no changes need be made to its HEW regulations because of *Davis*, which upheld HEW's interpretation of section 504. Since the Guidelines for other Federal agencies and the ORS regulations are based upon the HEW regulations, the Director has determined, after communicating with HEW, that the *Davis'* case requires no change in the proposed ORS handicap discrimination regulations.

Section 51.55(a) Definitions. Several comments were received, which suggested changes to various provisions of the definition of "handicapped individual." (Section 51.55(a)(1)) The ORS does not have the authority to amend the definition of a "handicapped individual." Section 85.4 of the HEW guidelines requires each agency to issue regulations, which define appropriate terms, consistent with the definitions and standards for determining who are handicapped persons contained in the Guidelines. Accordingly, the definitions of "handicapped individual" and "qualified handicapped individual", contained in the proposed rule, are identical to those in the Guidelines. No change has been made in this proposed ORS regulation.

The 1978 amendments to section 504 altered the definition of handicapped person with respect to drug addicts and alcoholics (Pub. L. 95-602, section 122). Since the amendment was consistent with HEW interpretations, no amendment to the proposed rule was needed.

Section 51.55(a)(6) Qualified handicapped individual. One comment was received, which pointed out that HEW had deleted the word "otherwise" from its definition of "qualified handicapped individual" because it made the provision ambiquous and that the ORS should do the same in the interest of consistency. The Director agrees and the proposed rule is therefore amended throughout to delete the word "otherwise."

The question arose within the Department of the Treasury as to why reasonable accommodation was not applied to discrimination against a qualified handicapped individual in the provision of services. After consultation with HEW, the Director decided that it should be made clear that a stronger standard than reasonable accommodation applies to discrimination in the provision of services than to discrimination in employment. A *qualified* handicapped individual cannot be deprived of a service or benefit solely because of the cost involved. Some method of providing the service must be found. With respect to employment, however, cost can be a factor in refusing to accomodate an applicant or employee. The limitation on accommodation of a handicapped individual with respect to the provision of services comes from the definition of "qualified handicapped individual." Only those handicapped individuals who meet the essential eligibility requirements of the program or activity are "qualified" and must be accommodated.

Section 51.55(b) General prohibitions with respect to discrimination against a qualified handicapped individual. Several comments were received, which objected to the cross-reference between § 51.55 and §§ 51.52(b) and 51.53(b) of the revenue sharing regulations as being ambiguous and needing clarification as to what does and does not apply to discrimination against a qualified handicapped individual. The Director agrees with these comments and proposes to amend § 51.55(b)(1) to eliminate the reference to § 51.53, "Employment discrimination", because that provision applies only to employment discrimination on the basis of race, color, national origin, sex or religion, and not on the basis of handicapped status. The section would further be amended to delete the confusing reference to a cross-reference between §§ 51.52(b) and 51.55, but make it clear that the general prohibitions described in § 51.52(b) (except §§ 51.52(b)(1) (ii), (iii) and (v)) also apply to discrimination against a qualified handicapped individual.

Proposed § 51.55(b)(1)(i) would be amended to clarify that even though it is permissible to maintain separate programs and activities for the handicapped, qualified handicapped individuals cannot be excluded from participation in programs and activities that are open to the general public. If, however, the cost of accommodating a handicapped individual is too great and a permissible separate program exists, then the individual can be limited to the separate program.

Proposed § 51.55(b)(1)(ii) would be amended in response to comment that the phrase "least segregated setting appropriate" does not sufficiently emphasize the need for handicapped persons to be integrated into society. The provision now refers to the "most integrated setting appropriate."

Section 51.55(b)(1)(iii) is proposed to be amended to refer to applicants, employees and beneficiaries as well as to the general public. Several comments were received, which expressed concern that recipient governments, particularly the smaller ones, would have difficulty communicating to persons of impaired vision as is required in § 51.55(b)(1)(iii). The requirement is not expected to work any great hardship on recipient governments. A number of methods can be employed to make communications available to the public. For example, a notification of public hearings might also be advertised over radio and

television through public service announcements.

A new § 51.55(b)(1)(iv) is added to the proposed regulation to make it clear to recipient governments that the public hearings required under section 12 of the Act and § 51.13 and § 51.14 of the regulations must be accessible to the handicapped. New § 51.55(b)(1)(v), (vi), (vii), (viii), (ix) and (x) are added to the proposed regulation in order to provide more consistency with HEW Guidelines. Sections 85.51(b)(1)(iii), (iv), (v) and (vii) and (b)(3), of the Guidelines and § 84.52(d) of the HEW regulations, provide the basis for those subsections. New § 51.55(b)(1)(v) is added to the proposed rule to require recipient governments to provide auxiliary aids to the visually, speech and hearing impaired to allow them to benefit equally from a program or activity. Examples of such auxiliary aids are brailled and typed material, interpreters and similar devices and services. A new § 51.55(b)(1)(ix) is added in order to clarify the fact that a recipient government may not fund discriminatory activities through contractual arrangements. A new § 51.55(b)(1)(x) is added to emphasize that a recipient government's zoning authority cannot be used to discriminate against the handicapped.

One comment was received, which suggested that § 51.55(b)(3) be eliminated because emphasis should be placed on the provision of equal services. The Director agrees with the position of HEW on this point that *equivalent,* as opposed to *identical,* services must be required, thereby providing equal opportunity to achieve the same result. Emphasis should be placed upon meeting the individual needs of handicapped persons to the same extent that the individual needs of nonhandicapped persons are met. The proposed subsection, therefore, remains the same. A new § 51.55(b)(4) emphasizes that the enforcement procedures contained in Subpart E shall be used to redress violations of the provisions of this section.

Section 51.55(c) Self-evaluation. Several comments were received, which objected to the time period allowed for self-evaluations under § 51.55(c) of the regulation. Those comments from recipient governments suggested that the time period be lengthened or indeed that the requirement was not necessary. Section 85.5(b)(2) of the HEW guidelines provides that each agency shall include a requirement for self-evaluation. The first proposed rule was based primarily on § 84.6(c) of the HEW regulations, except that the time for completion was set at two years instead of one. Several comments were suggested that the two-year time period was too long. They pointed out that HEW recipients were required to do self-evaluations within one year commencing June 3, 1977, the effective date of the HEW regulations, and further that in many cases the HEW and the ORS requirements would overlap. Departments of a recipient government which have already undertaken the self-evaluation could aid the recipient government in completing the overall self-evaluation required by the ORS. Accordingly, the time period for completing self-evaluations in the new proposed rule is reduced to one year.

One comment was received, which questioned whether the references to number of employees in § 51.55(c)(2) and § 51.55(k) of the proposed rule referred to full-time or part-time employees and suggested that the subsections should not be applicable to recipient governments with only part-time employees. Upon consulting with HEW, it was determined that the references to the number of employees in the Guidelines include both full-time and part-time employees. In the interests of minimizing the burden on small recipient governments, however, the Director proposed to adopt the concept of full-time equivalent employees. This means that two part-time employees would be counted as one full-time employee in order to determine if a recipient government employs fifteen or more persons. References to the number of employees throughout the proposed rule are specifically to full-time equivalent employees.

Section 51.55(d) Designation of responsible employee and adoption of grievance procedures, Section 51.55(e) notice. Several comments were received, which suggested that the proposed rule should have included requirements for designation of a responsible employee, establishment of grievance procedures and notification to employees and the public that the prohibition against discrimination on the basis of handicap exists. The Director agrees with the comments that these provisions should be added to the proposed regulation. Accordingly, § 51.55(d) "Designation of responsible employee and adoption of grievance procedure", and § 51.55(e) "Notice" are added to the new proposed rule. The new provisions are based upon §§ 84.7 and 84.8 of the HEW regulations.

Section 51.55(f) Administrative requirements for small recipient governments. Several comments were received, which suggested that no exceptions to any of the requirements should be allowed for small recipient governments because the same level of commitment should be required of all recipients of revenue sharing funds regardless of size. The Director realizes the difficulty of balancing the real concerns of small recipient governments over the burden of compliance in this relatively new area, with the goal of eliminating discrimination against the handicapped wherever it exists. While small governments should not be allowed to discriminate against the handicapped, merely because of their size, certain administrative requirements would be unduly burdensome on small recipient governments because of their lack of a workforce to undertake the implementation. A new § 51.55(f) has been added to the new proposed rule, however, to remind small recipient governments that the exceptions are not designed to authorize them to provide services and benefits in a discriminatory manner.

Section 51.55(g) Employment discrimination. Section 51.55(e) "Employment discrimination" is redesignated § 51.55(g). Reference to § 51.53 in the opening paragraph of proposed § 51.55(e) (of the original proposed rule) is proposed to be deleted. Section 51.55(e)(1) on "Reasonable accommodation" is deleted because it is redundant. A new § 51.55(g)(1)(i) states the basic prohibition against employment discrimination on the basis of handicapped status. Proposed § 51.55(e)(3), concerning preemployment inquiries, is deleted and becomes a new § 51.55(j) to be discussed below. Proposed § 51.55(e)(4) is redesignated § 51.55(g)(1)(i). Proposed § 51.55(e)(5) is redesignated § 51.55(g)(1)(iii).

A new § 51.55(g)(1)(iv), is added to the proposed rule in response to comment that the original proposed rule did not apply the prohibition to a number of important employment practices or conditions; the new paragraph is based upon § 84.11(b) of the HEW regulations. A new § 51.55(g)(2) is added to the proposed rule to provide that a recipient government is not excused from compliance because of inconsistent provisions in a collective bargaining agreement; it is based upon § 84.11(c) of the HEW regulations. Similarly, a new § 51.55(g)(3) is added to the proposed rule to prohibit a refusal to hire a handicapped individual because employment opportunities in the occupation are more limited; it is based upon § 84.10(b) of the HEW regulations.

Section 51.55(h) Reasonable accommodation. Section 51.55(f), of the original proposed rule "Reasonable accommodation;" is redesignated § 51.55(h). Several comments were received, which suggested that the provision concerning reasonable accommodation needed further elaboration and was unduly burdensome to recipient governments. The Director does not agree with the reasoning behind the comments because the concept of reasonable accommodation is not one in which every consideration can be anticipated and provided for by regulations. The determination as to what is reasonable with respect to a particular recipient government or a particular handicapped status, must be made on a case-by-case basis. Where the Director determines that more specific guidance is needed, however, such guidance will be given in the form of administrative or interpretive rulings. A new § 51.55(h)(4) is added to the proposed rule in response to comment that the regulation should prohibit denial of an employment opportunity to a qualified handicapped individual because of the need to make reasonable accommodation.

Section 51.55(i) Employment criteria. Several comments were received, which suggested that the section concerning employment criteria in the original proposed rule, § 51.55(e)(2), did not provide sufficient elaboration and should be more consistent with the comparable HEW provisions. Further, it has become clear to the Director that additional guidance is needed concerning the use of an employment criterion which excludes an entire class of handicapped individuals from consideration for a particular job or job classification. Some exclusionary standards are obviously needed. However, many recipient governments have created employment criteria which bar entire classes of handicapped individuals from consideration for certain jobs, even though individual members may be qualified to perform the essential functions of the job with reasonable accommodation.

In general, the absolute exclusion of a class of handicapped individuals from consideration for employment, without making an individual determination of the competency of a particular applicant, will be considered evidence of discrimination. A recipient government has the burden of proving that no member of a class of handicapped individuals can be qualified for the job in question in order to sustain such an absolute exclusion.

One example of an employment criterion used by many recipient governments is a policy which requires that to be considered for the position of police officer an individual must have vision, correctible to 20/20. Since it is clear that at least some people without such vision can perform police duties satisfactorily, an applicant must be afforded the opportunity to prove that he or she could still shoot accurately and perform the other essential functions of the job of a police officer without 20/20 vision. As another example, many recipient governments have established policies that no epileptics may be considered for appointment as police officers. The use of such a policy to exclude from consideration all applicants with a history of epilepsy (even if an individual has not had a seizure since childhood) is discriminatory because it does not take into account those persons who have their epilepsy under control.

A number of recent cases support the position that the establishment of employment criteria that unnecessarily exclude an entire class is discriminatory. See, *e.g., Connecticut Institute for the Blind* v. *Commission on Human Rights,* 18 FEP Cases 42, (Sup. Ct. Sept. 5, 1978) in which the Connecticut Supreme Court invalidated a requirement that all teacher's aides must have normal vision; *Davis* v. *Bucher,* 17 FEP 918, C.A. No. 77–932, (E.D. Pa. 1978) in which the Court held that the City discriminated against the plaintiff on the basis of handicap by its refusal to hire any former drug abusers; *Duran* v. *City of Tampa, Florida,* 430 F. Supp. 75 (M.D. Fla. 1977) in which it was held discriminatory for the City to have a policy excluding all persons with a history of epilepsy from employment as police officers (see also *Cleveland Board of Education* v. *La Fleur,* 414 U.S. 632 (1974); *Gurmankin* v. *Costango,* 411 F. Supp. 982 (E.D. Pa. 1976); *Marsh* v. *Pickens,* Civil Action No. 77 M. 1041 (D. Col., August 1, 1978).

An application of a policy of automatic exclusion also indicates that recipient governments have not attempted to determine if reasonable accommodation would enable a handicapped individual to perform the job in question. Reasonable accommodation of an epileptic individual to qualify him or her for the position of police officer, might require the recipient government to hire the handicapped individual as a "desk officer." The intent of the regulation is to require the recipient government to make a reasonable effort at job restructuring to eliminate those duties of a police officer for which an epiliptic is truly not qualified, while creating a meaningful full-time or part-time job. A recipient government has the burden of proving that an effort to make reasonable accommodation to the handicap of an individual would cause it undue hardship.

The proposed rule is, therefore, amended to provide in subparagraph (1) that a recipient government may not use a selection criterion or policy to exclude a handicapped individual or class of individuals, unless the criterion or policy is shown to be directly related to the essential functions of the position in question and less exclusionary plans. This is an issue which must be studied further before any changes can be made and comments are specifically requested for its resolution.

Section 51.55(j) Employment inquiries. Several comments were received, which suggested that the section concerning preemployment inquiries in the proposed rule, § 51.55(e)(3), did not provide sufficient elaboration and should be more in line with § 84.14 of the HEW regulations. The Director agrees with these comments, and therefore adds a new § 51.55(j) "Preemployment inquiries." One comment expressed concern that the prohibition against preemployment inquiries would cause an increase in the cost of workman's compensation and disability insurance plans. This is a problem which must be studied further before any changes can be made. Comments containing specific recommendations for resolution of this problem are requested.

Section 51.55(k) Program accessibility. Proposed § 51.55(g) concerning program accessibility is redesignated § 51.55(k). The general prohibition against conducting programs and activities unaccessible to the handicapped is designated § 51.55(k)(1). The greatest number of comments were received concerning the accessibility provisions of the original proposed rule. The comments from representatives of recipient governments expressed particular concern that upon the effective date of the regulations, recipient governments would be required to make major structural changes to all of their facilities. The regulations in no way require such wholesale renovation of public facilities. Section 122 of the Revenue Sharing Act does not require that every facility owned or used by a recipient government be accessible to the handicapped, unless that facility is constructed with revenue sharing funds after January 1, 1977. The emphasis has

always been placed upon program accessibility. Those facilities constructed before January 1, 1977, as well as constructed before January 1, 1977, as well as construction projects commenced before that time, need only be made accessible if the programs and activities conducted therein are not accessible and cannot be made accessible in any other way.

Accessibility, however, can be achieved in many ways which do not require modification of the structure of the facility. For example, a public hearing held in a building not accessible to the handicapped can be made accessible by moving it to another building. Where a building does not have an elevator, inaccessible programs and activities conducted on other floors could be moved to the first floor. A new § 51.55(k)(2)(ii) entitled "Methods", sets forth other examples of methods to make programs and activities accessible without structural changes to facilities.

Proposed § 51.55(i)), "Exception for small recipient governments", is redesignated § 51.55(k)(3). This subsection is a part of the continuing effort to take into account the burden of compliance on small recipient governments. Several comments were received, which objected that the exception for small recipient governments was not drawn narrowly enough and should apply only to certain types of services provided by small recipient governments. That approach is not feasible because the financial assistance provided by the Office of Revenue Sharing is open-ended in nature in that it is given directly to governments, not specific programs. Further, the recipients of revenue sharing funds are general purpose governments, except for the separate law enforcement officers of the State of Louisiana, Indian tribes and Alaskan native villages, all of which provide certain minimum services. The Director, therefore, declines to accept this comment. The comments also suggested that the regulation should specifically provide that the cost of providing the service would not be born by the handicapped individual. The Director agrees with these comments and § 51.55(k)(3) is proposed to be amended to provide that the handicapped individual may be referred to other providers of the servide at no additional cost to the handicapped individual.

A new § 51.55(k)(4), "Time periods," is proposed in response to comment that time limits should be set within which recipient governments must make their programs and activities accessible. Paragraph 51.55(k)(4)(i) is based upon § 84.22(d) of the HEW regulations and provides that a recipient government shall comply with this section within 60 days from the effective date of the regulations unless structural changes are required, in which case three years are allowed. Paragraph (k)(4)(ii) was added because the time limits for transportation systems set forth by the Department of Transportation will be different from those for facilities in general. HEW has determined that the problems with making transportation systems accessible are sufficiently serious to justify the extended time period.

Several comments were received, which objected to the fact that the proposed rule did not require the development of a transition plan in situations where structural changes are required. The Director agrees that such a plan should be required. A new § 51.55(k)(5) is therefore proposed to require a recipient government to develop a transition plan within one year from the effective date of the regulation, and sets forth the steps to be taken to complete the necessary changes. A time period of one year is set to correspond with the time period for the self-evaluation (§ 51.55(c)) which can be undertaken at the same time.

A new § 51.55(k)(6), is proposed to require recipient governments to notify the general public of the availability and location of particular services and activities which are accessible to the handicapped.

Proposed § 51.55(j) of the original proposed rule, "New construction", has been redesignated § 51.55(k)(7) and amended by deleting the definition of commencement of a construction project which is now provided in a separate subsection discussed below.

Proposed § 51.55(k), "Alterations," is redesignated § 51.55(k)(8).

One comment suggested that the accessibility requirements should also apply to facilities newly leased with revenue sharing funds after January 1, 1977. The Director agrees that new leases should be covered. It seems clear, however, that to add such a requirement to leases of long standing, which will soon be due for renewal, would be unfair. A new § 51.55(k)(9), is therefore proposed, which provides that facilities newly leased after the effective date of this section, shall be classified as new facilities and are subject to the same accessibility requirements as those facilities owned by recipient governments.

Several comments were received, which objected that the proposed rule did not reference any standards which recipient governments should follow to make new facilities accessible. The Director agrees that recipient governments need the additional guidance provided by the American National Standards Institute (ANSI). A new § 51.55(k)(10) is proposed, which provides that the design, construction or alteration of facilities in compliance with the ANSI standards, will satisfy the requirements of this section.

When the Revenue Sharing Act was amended to include discrimination against the handicapped, Congress also provided an exception for construction projects, which commenced prior to January 1, 1977. One comment suggested that this exception exempts all facilities, the construction of which was begun or completed before January 1, 1977. The Director believes that this is too broad a view of the exception. The emphasis must again be placed on program accessibility. The exception exempts "construction projects" commenced or completed before January 1, 1977, but only if the programs and activities conducted in the facilities are determined not to have been funded with revenue sharing funds or are otherwise accessible. The exception only exempts "construction projects" funded with revenue sharing funds, which are commenced or completed prior to January 1, 1977. Programs and activities funded with revenue sharing funds, however, must still be accessible to the handicapped as provided in this section. A new § 51.55(k)(11), is proposed to explain the application of the exception. New § 51.55(k)(12) is proposed to establish the date on which a construction project is deemed to be commenced, that date is the date when the recipient government obligated itself by contract for the physical construction of the project.

Section 51.56 Discrimination on the Basis of Age. The 1976 amendments added the prohibition against discrimination on the basis of age under the Age Discrimination Act of 1975 (Pub. L. 95-488).

The Age Discrimination Act of 1975 prohibits discrimination on the basis of age in programs or activities receiving Federal financial assistance. The definition of Federal financial assistance specifically includes revenue sharing. The Act also contains certain exceptions that permit, under limited circumstances, continued use of age distinctions or factors other than age that may have a disproportionate effect on the basis of age. The Age Discrimination Act requires HEW, as lead agency, to issue government-wide regulations, which each Federal agency with age discrimination responsibility

would use as a basis for the development of agency specific regulations.

HEW published final government-wide regulations on June 12, 1979 (45 CFR part 90, 44 FR 33708). The Age Discrimination act and the HEW government-wide regulations require the ORS to publish proposed and then final agency-specific regulations consistent with the government-wide regulations. This proposed rule is the first step in that process.

HEW government-wide regulations (45 CFR Part 90)

The government-wide regulations define certain terms and set standards for determining what is age discrimination under the Age Discrimination Act of 1975, and sets forth exceptions to the general prohibitions, all of which other Federal agencies must include in their agency-specific regulations. The Director may not use different definitions and standards than those in the government-wide regulations. Therefore, the Director asks that comments be directed solely to the new material in the ORS' agency-specific regulations. ORS will only respond to comments on the procedural requirements established by the final, government-wide regulations. The ORS' proposed age discrimination regulation is based upon Subparts A and B of the HEW government-wide regulations, which are repeated as appendix C to the proposed rule.

Procedural Provisions of Age Discrimination Act and HEW Government-Wide Regulations

When the age discrimination prohibition was added to the prohibitions contained in section 122 of the Revenue Sharing Act by the 1976 amendments, the intent of Congress was to make the substantive prohibition enforceable under the procedures set forth in sections 122, 124 and 125 of the Revenue Sharing Act, as amended, rather than procedures set forth in the Age Discrimination Act of 1975. The Revenue Sharing Amendments were passed one year after the Age Discrimination act of 1975. Since both Acts make age discrimination a prohibited practice by recipients of revenue sharing funds, the latter Act should obviously govern where conflict exists regarding procedures. Moreover, it is clear that the Revenue Sharing Act's procedures apply to all other forms of discrimination prohibited by section 122(a), and there is no basis for treating the age discrimination prohibition differently.

The same argument applies to the government-wide regulations issued by HEW to implement the Age Discrimination Act. The enforcement procedures set forth in Subpart D of the HEW government-wide age discrimination regulations are not applicable where revenue sharing funds are involved because the Revenue Sharing regulations have their own enforcement provisions against discriminatory conduct (31 CFR part 51, Subpart E). Substantive provisions of the HEW age discrimination regulations are of course applicable and binding upon the ORS and are the basis of the proposed rule. However, compliance with those provisions is supposed to be achieved under the enforcement provisions of the Revenue Sharing Act and regulations. In the interest of clarity, the regulations are being published as a whole, placing the age and handicapped regulations in the proper context. Except as otherwise provided in section 51.56, those procedures set forth in section 51.52 *et. seq.* will govern.

Specifically, provisions of Subpart D of the HEW government-wide regulations conflict in a number of areas with those contained in Subpart E of the revenue sharing regulations currently in effect and as contained in this proposed rule. Subpart E provides an enforcement mechanism for all bases of discrimination (not only age). As discussed later, revenue sharing regulations provide for complaint processing, compliance reviews, submission of required reports, remedial and affirmative action and exhaustion of administrative remedies prior to right of private action. The Revenue Sharing Act provides no authority however, for provisions for alternate funds disbursal or participation in the mediation process, discussed below. Further, the period for exhaustion of administrative remedies is 90 days, as opposed to 180 days under the Age Discrimination Act and regulations. Where the Director determined that provisions contained in the HEW government-wide regulation but not contained in Subpart E were compatible with the provisions of the Revenue Sharing Act and regulations, those provisions were added to the proposed rule. The proposed rule, therefore, provides for the conduct of a self-evaluation. Proposed § 51.52(b), which contains general prohibitions against discrimination would add a prohibition against intimidation or retaliation (§ 51.52(b)(5)) and currently provides for remedial and affirmative action by recipient government (proposed § 51.52(b)(7) and (b)(8) and § 51.61).

Mediation Process

The major inconsistency between the revenue sharing and HEW government-wide regulations is the provision in the latter for the mediation process. The revenue Sharing Act and regulations require the Director to investigate and issue a finding within 90 days after receipt of a complaint alleging discrimination prohibited by the Act. A mediation process allowing 60 days of mediation before the ORS begins its procedures would make it impossible for the ORS to meet the 90-day requirement of the Act.

At the same time, however, we agree that mediation would be a reasonable and efficient method of resolving many age discrimination complaints before they enter the formal compliance process. The Director, therefore, proposes that the mediation process be offered on a voluntary basis i.e., the complainant may agree to submit the age discrimination complaint to the mediation process before the formal ORS process begins. The time limitations contained in the Revenue Sharing Act and regulations were provided by Congress for the benefit of the complainant. It, therefore, appears reasonable to give complainants the option of selecting mediation and thereby delaying the ORS process or not. The Director would strongly recommend to complainants that they opt for mediation because of the likelihood that potential complaints would be resolved in a quicker and less adversary manner.

The ORS formal administrative process will not be deemed to begin until a complaint submitted to mediation has been returned to the ORS unresolved. Prior to being returned to the ORS, the allegations will be designated a claim as opposed to a complaint. If the complainant agrees to mediation, a claim would only become a complaint for revenue sharing purposes, after mediation failed and FMCS had notified ORS. The Director specifically requests comments upon the question of ORS use of a voluntary mediation process, particularly from potential complainants.

Discussion of Important Requirements and Examples

HEW, as part of the preamble on its proposed agency specific regulations, sets out important requirements and examples of their application to HEW recipients. Since departments and agencies of recipient governments are frequently recipients of HEW funds that section is also helpful to Revenue Sharing recipient governments.

Accordingly, the discussion is attached as appendix C.

Effective date

It is the position of HEW that the effective date of the age discrimination prohibition begins with the effective date of the final HEW government-wide regulations, July 1, 1979. The ORS proposed age discrimination regulations are, therefore, drafted with July 1, 1979, as the effective date. Until final revenue sharing age discrimination regulations are issued, complaints received after that date will be processed pursuant to the government-wide regulations with respect to the substantive prohibitions, but pursuant to the existing procedures under Subpart E of the revenue sharing regulations. Complainants should state in their complaints whether they wish to use the mediation option. The exhaustion of administrative remedies under section 124 of the Revenue Sharing Act, will occur within 90 days after the filing of the complaint by the complainant after July 1, 1979.

Section 51.59 Assurances required; compliance information and reports. On July 24, 1978 (43 FR 31927) § 51.59(a), was amended in interim form to eliminate the requirement that the copy of a holding to be submitted to the Director be certified. This amendment remains in the proposed rule. Proposed § 51.59(b), "Constructive waiver of entitlement payment," applies the constructive waiver process to failure by recipient governments to submit assurances they will comply with the provisions of Subpart E. This section parallels proposed § 51.3(e), which establishes the same procedure for enforcing the assurance requirement with respect to provisions other than Subpart E. Proposed § 51.6(c), "Constructive waiver," adds the same provision with respect to the submission by recipient governments of compliance information and reports.

Section 51.61 Compliance reviews and affirmative action. The proposed rule is completely revised to provide more specificity concerning what a compliance review will consist of. The regulation is modeled after that of the Law Enforcement Assistance Administration of the Department of Justice (28 CFR 42.206) to enforce the Crime Control and Safe Streets Act of 1976.

Proposed § 51.61(b) "Affirmative action" would remove the reference to the guidelines of the Equal Employment Opportunity Coordinating Council, which no longer exists. The Equal Employment Opportunity Commission has recently published Affirmative Action Guidelines, which supersede those of the Coordinating Council. Accordingly, the Director proposes to include these guidelines as an appendix to provide additional guidance.

Section 51.62 Administrative complaints and investigations. Proposed § 51.62(b) "Investigations" amends the interim regulation to clarify that the ORS will investigate administrative complaints, which allege a discriminatory practice which, if true, would violate the Act. Information, other than complaints, either generated within or outside of the ORS may also be the source of an investigation. The proposed rule also provides that the Director may defer to the Attorney General in appropriate cases. The subsection, in conjunction with § 51.69(c), serves as the basis for a cooperative agreement with the Department of Justice. The proposed rule also provides that the scope of an investigation is not limited to the complaint or other information on which it is based, but may be expanded to include other matters.

Section 51.64 Notification of noncompliance. Proposed §§ 51.64 and 51.65 combine interim §§ 51.62, 51.65, 51.67 and 51.68 and generally reorganize the provisions describing the procedures for effecting compliance.

Proposed § 51.64(a) provides that after an investigation or receipt of a determination of a State administrative agency, the Director shall make a finding that it is more likely than not that the recipient government has failed to comply with the provisions of this subpart if warranted. The Director shall within ten days of making a finding, issue a notice of noncompliance to the recipient government and inform the government that it has 30 days to enter into compliance, provide evidence to demonstrate compliance, or prove by clear and convincing evidence that revenue sharing funds were not used to fund the particular program or activity, or else a determination of noncompliance will be issued.

Proposed § 51.64(b) provides that within 10 days after receipt of a holding, the Director shall notify the recipient government of the holding and that the holding is conclusive on the issue of discrimination. The notice of noncompliance shall further inform the recipient government that it has 30 days to enter a compliance agreement or prove lack of funding by clear and convincing evidence, or else a determination of noncompliance will be issued.

Proposed § 51.64(b)(2) provides that where the remedial order issued on which the holding is stayed by a court, the stay will not affect action by the Director unless the ORS is specifically included in the stay.

Section 51.65 Determination of noncompliance. This section covers the action to be taken by the Director if the recipient government fails to enter into compliance after receipt of notification of noncompliance. Once a determination of noncompliance is issued, the recipient government has ten days to enter a compliance agreement, prove by clear and convincing evidence that the program or activity complained of was not funded with revenue sharing funds or request a hearing. If the recipient government does not take any of these actions within the 10-day period, the payment of revenue sharing funds to that government will be suspended until a compliance agreement is concluded. Section 51.65(b)(3) provides that administrative action based upon a holding will be discontinued if that holding is reversed by an administrative tribunal.

Sections 51.66, 51.68(c), 51.69, and 51.72 concerning administrative hearing procedures have been placed in appropriate sections of Subpart G.

Section 51.66 Compliance agreement. Proposed § 51.66(a) sets forth the requirements for compliance agreements where the ORS is not directly a party.

Proposed § 51.66(b) provides that in the case of a holding, the remedial order issued pursuant to the holding, if any, will be the basis of a compliance agreement. If there is no remedial order, a compliance agreement will still be concluded and modified if necessary when the remedial order is issued.

Proposed § 51.66(c) sets forth the requirements for a compliance agreement between the Director and a recipient government. It must be in writing and signed by the Director and the chief executive officer. The agreement may, however, consist of a series of documents.

Proposed § 51.66(d) provides that if the Director believes that a recipient government has violated the provisions of the agreement, the Director may issue a determination of noncompliance based upon the alleged violation of agreement. A subsequent administrative hearing would be limited to the issue of whether the recipient government complied with the agreement.

Section 51.67 Resumption of suspended entitlement payments. This section remains unchanged except that the word "may" is replaced with "shall" since the Director has no discretion to continue to withhold revenue sharing funds if one of the events described occurs.

Section 51.69 Agreements between agencies. The proposed rule would amend this section to describe with greater specificity what a cooperative agreement with a Federal or State agency may include.

Section 51.70 Jurisdiction over property. The proposed rule would amend this section to reflect the fact that jurisdiction over property is not restricted to specific programs and activities. ORS jurisdiction over a recipient government was amended by the 1976 amendments to section 122 of the Act to cover all property unless the government proves by clear and convincing evidence that revenue sharing funds were not spent for the particular property or in the program or activity concerned.

Interim § 51.74 "Authority of the Attorney General of the United States" is deleted from the proposed rule. The subsection restated section 122(g) of the Act, which does not contain any matter to be regulated by the ORS.

Coordination with the Equal Employment Opportunity Commission Pursuant to Executive Order 12067

Consistent with the underlying purpose of Executive Order 12067, the ORS submitted Subpart E of the proposed regulation to EEOC for review. The following item has been recommended for inclusion in the proposed regulations and will be addressed in the final regulations (other changes have already been incorporated in the proposed regulation):

Prefindings. In order to promote early compliance in a case disclosing evidence of noncompliance, the ORS has established an informal procedure in which a prefinding letter is issued. The prefinding letter is issued prior to the notice of noncompliance. The letter presents the information relevant to the alleged noncompliance and provides the recipient government with an opportunity to present preliminary evidence refuting the prefinding letter's indications and noncompliance. The procedure is not statutory and used at the discretion of the manager of the Civil Rights Division. The issuance of a prefinding letter has, therefore, not been included in the regulation as a formal step in the ORS enforcement process.

The EEOC recommends that the prefinding process be described in the appropriate sections of Subpart E. Consideration will be given to additional comments on this matter.

Subpart F—Fiscal Procedures and Auditing

This subpart is reorganized to take the definitions contained in final §§ 51.101 "Auditing and evaluations," and 51.2, general definitions, and create a new definition § 51.100. Sections 51.100(a) and (b) would add the only new definitions. The definitions of "compliance" and "financical audit" reflect the current operating procedure of dividing the single independent audit requirement into two separate audits, a financial audit of all of a recipient government's funds and a compliance audit to determine that revenue sharing funds were spent in compliance with the provisions of the Act. The provisions of the Act referred to include the nondiscrimination provisions of Section 122; public participation requirements of Section 121, the prohibition against the use of revenue sharing funds for lobbying purposes and the requirements in section 123(a) that revenue sharing funds be spent in accordance with State and local law.

Section 123(c) of the Act requires and "independent audit of [a recipient government's] financial statements conducted for the purpose of determining compliance [with the Act] in accordance with generally accepted auditing standards not less often than once every three years." For the sake of convenience, this audit is being performed separately as a financial audit and a compliance audit. The proposed rule merely reflects this current operating practice.

Section 51.101 Procedures applicable to the use of funds. The proposed rule would make only one minor change to this section. Proposed § 51.101(c) would specify that State and local laws and procedures must be followed in the expenditure of revenue sharing funds except where they conflict with Federal law which of course includes the provisions of the Revenue Sharing Act.

Section 51.102 Auditing and evaluations. Section 51.102(a) of the proposed rule would include a reference to the separation of the single audit requirement into a financial audit and a compliance audit, as discussed above. Proposed § 51.102(b) would eliminate the requirement that a recipient government submit a written assurance in order to elect to follow State or local law. The section would also add a new subsection to clarify that a compliance audit is still required if a recipient government elects to follow State or local law in the performance of an audit.

Proposed § 51.102(c) would make it clear that where a recipient government is required by State or local law to conduct an audit, though exempted from the requirement by the Act, that audit must be performed. As stated above, § 51.101(c) requires the expenditure of revenue sharing funds in accordance with the laws and procedures applicable to the expenditure of a recipient governments own funds unless that State or local law conflicts with Federal law. Additional requirements which go beyond the requirements of the Revenue Sharing Act would not be considered conflicting. As stated in Section 123(c) of the Act, the performance of a locally required audit will be considered compliance with the Revenue Sharing Act. The audit performed pursuant to this subsection need not be submitted to the ORS, but shall be made available upon request by the Director.

Proposed § 51.102(d) would provide that a recipient government using the series of audits approach may perform the compliance audit for any one of the three fiscal years.

Section 51.103 Waiver of audit requirement where financial accounts are unauditable. The proposed rule would amend this section to eliminate the requirements that the request for the waiver be submitted before March 31, 1978.

Section 51.107 Scope of audits. The proposed rule would amend this section to clarify that the scope of audits include all of the financial statements for each separate fund. The section would further add the *Statements on Auditing Standards* as an additional guide for the type of audit to be conducted. Section 51.107(c) would clarify what the financial statement consists of.

Subpart G—Proceedings for Reduction in Entitlement, Withholding, Suspension, or Repayment of Funds

This subpart has been revised to differentiate between the requirements for administrative hearings concerning violations of subpart E and those concerning subparts B, D, and F. Section 122 of the Revenue Sharing Act sets forth the hearing procedures for nondiscrimination violations. Section 123(b) sets forth the hearing procedures for violations of the provisions of the Act other than section 122. The current subpart G does not make it clear where the two procedures are the same and where they differ. In the interest of consistency, the administrative hearing procedures contained in current subpart E are added to proposed subpart G. Unless otherwise specified the procedures described in this subpart apply to both types of hearings.

Section 51.202 Reasonable notice and opportunity for hearing. Proposed § 51.202 states that provisions for repayment, withholding, or reduction in revenue sharing payments apply to violations of the provisions of subparts

B, D, and F, while provisions for suspension or termination of the payment of revenue sharing funds apply to violation of the provisions of subpart E.

Section 51.203 Opportunity for compliance. Proposed § 51.203 is amended to reference the provisions pursuant to which a recipient government will be given the opportunity to enter into compliance prior to the initiation of an administrative hearing.

Section 51.204 Institution of an administrative hearing. The proposed rule provides for the institution of an administrative hearing. A hearing instituted under the provisions of subpart E differs from the hearing instituted under other provisions because it is instituted by the Director only after the request of the recipient government and is required under section 122(b)(3)(A) to be instituted within 30 days of receipt of the request by the Director.

Section 51.205 Complaint for administrative hearing; Section 51.206 Service of complaint and other papers. The proposed rule would amend these sections to point out the shortened time frames under which complaints and answers for hearings under subpart E must be filed pursuant to section 122(b)(3)(A). Section 51.205 provides that for hearings under subpart E the complaint must require that the answer be filed within 10 days of receipt of the complaint by the recipient government. Section 51.206 requires that for hearings under subpart E the complaint must be served upon the recipient government within seven days of receipt of the request for a hearing from the recipient government.

Section 51.211 Administrative hearings. This section would set forth the procedures under which an administrative hearing is conducted. Proposed Section 51.211(b) is based upon current Sections 51.66 and 51.68 of subpart E.

Section 51.214 Depositions. The proposed rule would amend this section to provide for the taking of depositions in a shorter time period for hearings under the provisions of subpart E. The summary hearing pursuant to proposed § 51.211 must commence within 30 days of the request for an administrative hearing by the recipient government.

Section 51.217 Preliminary finding (for hearings under subpart E). Proposed § 51.217 sets forth the provisions currently contained in § 51.66 of the interim regulations concerning actions to be taken by the Director after a summary hearing under the provisions of subpart E.

Section 51.218 Initial decision of the administrative law judge. The proposed rule would amend this section to clarify the contents of the decision of the administrative law judge. The administrative law judge's decision is not to include the remedy for noncompliance. The decision merely sets forth the findings of fact and conclusions of law and whether the recipient government has failed to comply with the provisions of the Act.

Section 51.221 Procedure or review of decision of administrative law judge. The proposed rule removes the restriction in current § 51.221(b) that the Director appeal only in absence of appeal by respondent. Proposed § 51.221(b) would add a new provision to state that the Secretary of the Treasury may review the decision of the administrative law judge absent appeal by either party. Current § 51.222 is proposed to be added to this section as a new § 51.221(c). The subsection would provide that the Secretary's decision is the final agency decision.

Section 51.222 Effect of absence of appeal or review of initial decision of administrative law judge. The proposed rule would add a new section to clearly state that the initial decision of the administrative law judge becomes the final agency decision if not appealed by either party or reviewed by the Secretary.

Section 51.223 Effect of order of repayment, withholding of funds or suspension of funds. The proposed rule would describe the remedial orders which may be issued by the administrative law judge after an administrative hearing. Paragraphs (e) and (d) are currently contained in § 51.69 (b) and (c) of the interim regulation.

Section 51.225 Judicial review. The proposed rule would amend this section to provide that the Director may cross-appeal issues decided adversely to the ORS unless those issues were ruled upon directly by the Secretary.

Written Comments solicited

The Director solicits comments on the complete set of revenue sharing regulations or any of its individual parts. Comments on age and handicap regulations will be particularly useful and are specifically requested.

Regulatory Analysis

Section 3 of Executive Order 12044, *Improving Government Regulations,* requires a regulatory analysis for "significant regulations which may have major economic consequences for the general economy, for individual industries, geographic regions or levels of governments." The Treasury Department has determined (pursuant paragraph 13 of the Treasury Department implementation of the Executive Order, 43 FR 52120) that the overall revisions of the regulations, being primarily technical and procedural will not have an impact on the public of $100 million or more and therefore will not require a regulatory analysis. With respect to § 51.56, "Discrimination on the basis of age," the Treasury Department has determined the economic consequences flow directly from the Age Discrimination Act and the Revenue Sharing Act and the cost of implementation will not have an impact on the community of $100 million or more. Accordingly, Treasury has concluded that a regulatory analysis is not required for age discrimination.

With respect to § 51.55, discrimination with respect to an otherwise qualified handicapped individual, this regulation was in the process of active preparation before May 22, 1978, and the provisions of Executive Order 12044 "Improving Government Regulations" and the Treasury Department implementation thereof are not technically applicable. Because of the potential costs, however, a regulatory analysis may still be prepared. The issue is still under review within the Department and the Director has decided to request comments concerning the need for such an analysis. The analysis prepared by the Departments of HEW and Transportation are likely to have general applicability to the costs to recipients of revenue sharing funds because they fund many of the same kinds of programs. As with age discrimination, the economic consequences flow directly from the statute, in this case Executive Order 11914, "Nondiscrimination On The Basis of Handicap In Federally Assisted Programs." Accordingly, the Director preliminarily takes the position that a regulatory analysis need not be prepared.

Authority

This proposed rule is issued under the authority of the State and Local Fiscal Assistance Act of 1972 (Pub. L. 92–512), as amended by the State and Local Fiscal Assistance Amendments of 1976 (Pub. L. 94–488), the Age Discrimination Act of 1975, as amended, and section 504 of the Rehabilitation Act of 1973, as amended (Pub. L. 93–112) and Treasury Department Order No. 224, dated January 26, 1973 (38 FR 3342) as amended, by Treasury Department Order No. 242 (Revision No. 1) dated May 17, 1977.

31 CFR Part 51, is therefore proposed to be revised in the manner set forth below:

Kent Peterson,

Acting Director, Office of Revenue Sharing.

Roger C. Altman,

Assistant Secretary (Domestic Finance).

December 21, 1979.

PART 51—FINANCIAL ASSISTANCE TO STATE AND LOCAL GOVERNMENTS

Subpart A—General Information

Sec.
51.0 Scope and application of regulations.
51.1 Establishment of Office of Revenue Sharing.
51.2 Definitions.
51.3 Procedure for effecting compliance for violations of provisions other than Subpart E.
51.4 Transfer of entitlement funds to secondary recipients.
51.5 Time Periods.
51.6 Effect of State or local law.
51.7 Applicability of other Federal laws.

Subpart B—Assurances, Reports, Public Participation, and Public Hearings

51.10 Definitions.
51.11 Reports to the Director; assurances; procedure for effecting compliance.
51.12 Use Reports.
51.13 Proposed use hearing.
51.14 Budget hearing.
51.15 Amendments or modification to enacted budget.
51.16 Participation by senior citizens.
51.17 Notification of new media.
51.18 Legal notice rules not applicable.
51.19 Reports to the Bureau of the Census.

Subpart C—Computation and Adjustment of Entitlement Funds

51.20 Data.
51.21 Data affected by a major disaster.
51.22 Adjusted taxes.
51.23 Date for determination of allocation.
51.24 Boundary changes, governmental reorganization, etc.
51.25 Waiver of entitlement; nondelivery of checks; insufficient data.
51.26 Reservation of funds and adjustment of entitlement.
51.27 State to maintain transfers to local governments.
51.28 Optional formula.
51.29 Adjustment of data factors.
51.30 Adjustment of maximum and minimum per capita entitlement; 100 percent criterion.
51.31 Separate law enforcement officers.
51.32 Population of Indian tribes and Alaskan native villages.

Subpart D—Prohibitions and Restrictions on use of Funds

51.40 Matching funds.
51.41 Permissible expenditures for units of local government.
51.42 Wage rates and labor standards.
51.43 Restriction on expenditures by Indian tribes and Alaskan native villages.
51.44 Lobbying.
51.45 Use of entitlement funds for debt retirement.

Subpart E—Nondiscrimination by States and Local Governments Receiving Entitlement Funds

51.50 Purpose.
51.51 Definitions.
51.52 Discrimination prohibited.
51.53 Employment Discrimination.
51.54 Discrimination on the basis of sex.
51.55 Discrimination with respect to a qualifed handicapped individual.
51.56 Discrimination on the basis of age.
51.57 Discrimination on the basis of national origin.
51.58 Discrimination on the basis of religion.
51.59 Assurances required.
51.60 Compliance information and reports.
51.61 Compliance reviews and affirmative action.
51.62 Administrative complaints and investigations.
51.63 Notification to the complainant.
51.64 Notification of noncompliance.
51.65 Determination of noncompliance.
51.66 Compliance agreements.
51.67 Resumption of suspended entitlement funds.
51.68 Exhaustion of administrative remedies.
51.69 Agreements between agencies.
51.70 Jurisdiction over property.

Subpart F—Fiscal Procedures and Auditing

51.100 Definitions.
51.101 Procedures applicable to the use of funds.
51.102 Auditing and evaluation.
51.103 Waiver of audit requirements where financial accounts are unauditable.
51.104 Audit of secondary recipients.
51.105 Reliance upon audits under other Federal laws.
51.106 Audit opinions.
51.107 Scope of audits.
51.108 Retention of audit workpapers.
51.109 Requirements to submit audit reports.

Subpart G—Proceedings for Reduction in Entitlement, Withholding, Suspension, or Repayment of Funds

51.200 Scope of subpart.
51.201 Liberal construction.
51.202 Reasonable notice and opportunity for hearing.
51.203 Opportunity for compliance.
51.204 Institution of administrative hearing.
51.205 Complaint for administrative hearing.
51.206 Service of complaint and other papers.
51.207 Answer, referral to administrative law judge.
51.208 Proof; variance; amendment of pleadings.
51.209 Representation.
51.210 Administrative law judge; powers.
51.211 Administrative hearings.
51.212 Stipulations.
51.213 Evidence.
51.214 Depositions.
51.215 Stenographic record; oath of reporter; transcript.
51.216 Proposed findings and conclusions.
51.217 Preliminary finding (for hearing under Subpart E).
51.218 Initial decision of the administrative law judge.
51.219 Certification and transmittal of record and decision.
51.220 What constitutes the record.
51.221 Procedures for review of decision of administrative law judge.
51.222 Effect of absence of appeal on review of initial decision of administrative law judge.
51.223 Effect of order of repayment, withholding of funds or suspension of funds.
51.224 Publicity of proceedings.
51.225 Judicial review.

Authority: State and Local Assistance Act of 1972, Pub. L. 92–512), as amended by the State and Local Fiscal Assistance Amendments of 1976 (Pub. L. 94–488), the Age Discrimination Act of 1975, as amended, and section 504 of the Rehabilitation Act of 1973, as amended (Pub. L. 93–112) and Treasury Department Order No. 224, dated January 26, 1978 (38 FR 3342) as amended by Treasury Department Order No. 242 (Revision No. 1) dated May 17, 1977.

Subpart A—General Information

§ 51.0 Scope and application of regulations.

(a) *In general.* The rules and regulations in this subpart are prescribed for carrying into effect the State and Local Fiscal Assistance Act of 1972 (Pub. L. 92–512) applicable to entitlement periods beginning January 1, 1973 and the State and Local Fiscal Assistance Amendments of 1976 (Pub. L. 94–488) applicable to entitlement periods beginning January 1, 1977. Subpart A of this part sets forth general information and definitions of terms used in this part. Subpart B of this part prescribes the reporting, public hearing and publication requirements under this part. Subpart C of this part contains rules regarding the computation, allocation and adjustment of entitlements. Subpart D of this part prescribes prohibitions and restrictions on the use of funds. Subpart E of this part contains the nondiscrimination provisions applicable to programs funded by recipient governments which receive revenue sharing funds. Subpart F of this part prescribes fiscal procedures and auditing requirements. Subpart G of this part contains rules relating to procedure and practice requirements where a recipient government has failed to comply with any provision of this part.

(b) *Effect on pending cases.* The procedural provisions of the State and Local Fiscal Assistance Amendments of 1976 (Pub. L. 94–488) and regulations promulgated thereunder shall apply to all pending administrative proceedings,

including cases commenced by complaints filed prior to January 1, 1977.

§ 51.1 Establishment of Office of Revenue Sharing.

There is established in the Office of the Secretary of the Treasury the Office of Revenue Sharing. The office shall be headed by a Director who shall be appointed by the Secretary of the Treasury. The Director shall perform the functions, exercise the powers and carry out the duties vested in the Secretary of the Treasury by the State and Local Fiscal Assistance Act of 1972, Title I, Public Law 92-512 as amended by the State and Local Fiscal Assistance Amendments of 1976, Public Law 94-488. A reference to the individuals in the feminine or masculine gender shall not be construed to exclude either gender.

§ 51.2 Definitions.

As used in this part (except where the context clearly indicates otherwise, or where the term is otherwise defined elsewhere in this part) the following definitions shall apply:

(a) "Act" means the State and Local Fiscal Assistance Act of 1972, Title I of Public Law 92-512, approved October 20, 1972 as amended by the State and Local Fiscal Assistance Amendments of 1976, Public Law 94-488, approved October 13, 1976. (31 U.S.C. 1221, *et seq.*, as amended).

(b) "Chief executive officer" of a unit of local government means the elected official, or the legally designated official, who has the primary responsibility for the conduct of that unit's governmental affairs. Examples of the "chief executive officer" of a unit of local government may be: The elected mayor of a municipality, the elected county executive of a county, the chairman of a county commission or board in a county that has no elected county executive, the township supervisor, trustee, first selectman, chairman, city manager, or such other official as may be designated pursuant to law by the duly elected governing body of the unit of local government; or the chairman, governor, chief or president (as the case may be) of an Indian tribe or Alaskan native village.

(c) "Department" means the Department of the Treasury.

(d) "Director" means the Director of the Office of Revenue Sharing.

(e) "Entitlement" means the amount of payment to which a State government or unit of local government is entitled as determined by the Director pursuant to an allocation formula contained in the Act and as established by regulations under this part.

(f) "Entitlement funds" means the amount of funds paid or payable to a State government or unit of local government for the entitlement period.

(g) "Entitlement period" means one of the following periods of time:

(1) The 6-month period beginning January 1, 1973, and ending June 30, 1973.

(2) The fiscal year beginning July 1, 1973, and ending June 30, 1974.

(3) The fiscal year beginning July 1, 1974, and ending June 30, 1975.

(4) The fiscal year beginning July 1, 1975, and ending June 30, 1976.

(5) The 6-month period beginning July 1, 1976, and ending December 31, 1976.

(6) Entitlement Period Eight is the 9-month period beginninng January 1, 1977, and ending September 30, 1977.

(7) Entitlement Period Nine is the fiscal year beginning October 1, 1977, and ending September 30, 1978.

(8) Entitlement Period Ten is the fiscal year beginning October 1, 1978, and ending September 30, 1979.

(9) Entitlement Period Eleven is the fiscal year beginning October 1, 1979, and ending September 30, 1980.

(h) "Funded" means funds have been or are being made available for expenditure in or substantially benefited a program or activity of the recipient government or a secondary recipient.

(i) "Governor" means the Governor of any of the 50 States or the Mayor of the District of Columbia.

(j) "Indian tribes and Alaskan native villages" means those Indian tribes and Alaskan native villages which have a recognized governing body and which perform substantial governmental functions. Certification to the Director by the Secretary of the Interior (or by the Governor of a State in the case of a State affiliated tribe) that an Indian tribe or an Alaskan native village has a recognized governing body and performs substantial governmental functions, shall constitute prima facie evidence of that fact.

(k) "Lobbying" means the personal solicitation or exercise of personal influence upon members of a legislative body by representatives of the recipient government for the purpose of influencing pending or proposed legislation regarding the provisions of the Act.

(l) "Program or activity" means the operations of the agency or organizational unit of a recipient government or the operations or organizational unit of a secondary recipient (examples include but are not limited to a police department, department of corrections, health department, or a division of a public or private corporation).

(m) "Recipient government" means a State government or unit of local government as defined in this section, Indian tribe, Alaskan Native Village, or the office of the separate law enforcement officer for any parish in the State of Louisiana other than the Parish of Orleans which directly receives entitlement funds.

(n) "Secondary recipient" means: (1) any State government, unit of local government, any political subdivision of any State or local government, any public or private agency, institution, organization or other entity which receives entitlement funds, in whole or in part, from a recipient government either:

(i) by a contract or other arrangement pursuant to which such other entity shall conduct, deliver or otherwise participate or assist in the conduct or delivery of a program or activity of the recipient government, including construction projects or;

(ii) by a grant or other arrangement with the recipient government intended to provide financial assistance to such other entity under a program or activity.

(2) "Secondary recipient" shall not include any other private or governmental entity from which a recipient government only acquires real or personal property (e.g. supplies, equipment and materials) by such means as purchasing, renting, leasing, or bartering. Secondary recipient also shall not include persons who are the ultimate beneficiaries of a recipient goverment's programs or activities.

(o) "Secretary" means the secretary of the Treasury.

(p) "State government" means the government of any of the 50 States or the District of Columbia.

(q) "Unit of local government" means the government of a county, municipality, or township, which is a unit of general government and which shall be determined on the basis of the same principles as used by the Bureau of the Census for general statistical purposes. The term "unit of local government" shall also include the recognized governing body of an Indian tribe or Alaskan native village which performs substantial governmental functions. The District of Columbia, in addition to being treated as a State, shall also be treated as a county area which has no units of local government (other than itself) within its geographic area.

§ 51.3 Procedures for effecting compliance for violations of provisions other than subpart E.

(a) *Investigations.* (1) Within 180 days of receipt of an administrative

complaint, audit report or other information relating to possible violation of the provisions of this part (other than subpart E), the Director shall complete an investigation and issue a finding.

(2) The scope of the investigation is not necessarily limited to the administrative complaint or other information but may be expanded to include any matters under the Act either discovered during the investigation or reasonably flowing from said administrative complaint or other information.

(b) *Compliance review or audit.* The Director may periodically conduct audits or reviews of compliance with the provisions of the Act (other than subpart E) which shall be completed within 180 days after initiation.

(c) *Finding by the Director.* After the completion of an investigation, compliance review or audit, the Director shall issue a finding as to whether the recipient government has complied with the provisions of the Act. After the issuance of a finding, the Director shall provide the appropriate notice(s) of noncompliance and make appropriate efforts to secure compliance.

(d) *Opportunity for hearing.* If a recipient government fails to enter into compliance after receipt of appropriate notice(s) of noncompliance, the Director shall initiate an administrative hearing pursuant to the provisions of subpart G of this part.

(e) *Constructive waiver of entitlement payments.* The failure of a recipient government to comply with the assurance and reporting requirements of subpart A, which include response to specific requests for information concerning possible violations of the Act, shall result in the determination that one or more of the entitlement payments to the recipient government for a particular entitlement period is constructively waived pursuant to § 51.25(b) of this part. The constructive waiver shall not be subject to the procedure for effecting compliance set forth in paragraph (a) of this section.

§ 51.4 Transfer of entitlement funds to secondary recipients.

Any prohibitions, restrictions and requirements set forth in subparts D, E, and F of this part that are applicable to a recipient government's use and expenditure of entitlement funds are also applicable to the expenditure of entitlement funds transferred to a secondary recipient by the primary recipient government. Any failure by a secondary recipient to comply with any provision of subparts D, E, and F shall constitute noncompliance with such subparts by the primary recipient government and the Director shall effect compliance by taking appropriate enforcement action against the recipient government.

§ 51.5 Time periods.

(a) *Effect on notice.* Time periods that begin with the date of an event, such as the making of a determination by the Director or a request for a wiaver by a recipient government, shall begin with the date of the receipt of notice of the event.

(b) *Time periods of ten (10) days or less.* References to time periods of ten (10) days or less shall be to working days unless otherwise specified. References to time periods of more than ten (10) days shall be to calendar days unless otherwise specified.

§ 51.6 Effect of State or local law.

Any State or local law, ordinance or regulation that substantially impedes compliance by a recipient government with the provisions of this part, shall be inoperative to the extent necessary to achieve such compliance or remedy.

§ 51.7 Applicability of other Federal laws.

Except as otherwise provided in the Act or this part, entitlement funds are not subject to Federal civil laws applicable only to Federally assisted programs or to Federal grants, loans or contracts. The Criminal Code of the United States (title 18, U.S.C.) shall be applicable to all criminal offenses relating to the expenditure, accounting or reporting of entitlement funds by a recipient government receiving such funds under the Act or this part.

Subpart B—Assurances, Reports, Public Participation and Public Hearings

§ 51.10 Definitions.

As used in this subpart (except where the context clearly indicates otherwise) the following definitions shall apply:

(a) "Budget" means a plan for the overall allocation of funds, including entitlement funds, by a recipient government to various purposes during a specified fiscal period in accordance with its State or local law and procedure. A recipient government that does not formally adopt or enact such a plan, shall be deemed to have adopted or enacted a budget for purposes of this subpart when it has adopted or enacted a resolution, ordinance, or appropriation act, or taken other action dedicating, setting aside, or otherwise designating entitlement funds for a particular purpose or use.

(b) "Budget summary" means categories of expenditures for entitlement funds and general funds classified by major function and activity in accordance with the recipient government's State or local laws and procedures. Where there is no State or local law or procedure prescribing the expenditure classifications, the recipient government shall use the classifications of the Bureau of the Census.

(c) "Enacted" means, in the budget context, the act of final adoption, ratification, confirmation or other action with respect to an approved budget that makes the budget the official expenditure authorization of the recipient government. Where a State board or agency has statutory authority to review or approve the budget of a unit of local government, enacted means the final action of the unit of local government.

(d) "Fiscal year" means the 12-month period or other fiscal period on the basis of which the recipient government operates.

(e) "Executive authority" means the chief executive officer or other elected or appointed officials of the recipient government whose statutory responsibility is to assemble budget data and prepare the budget document for presentation to the legislative body for enactment or approval.

(f) "Legislative body" means the elected official or officials of the recipient government who have the primary legal responsibility for enacting the budget.

(g) "Presented" means, in the budget context, the submission of a proposed budget to the legislative body having primary legal responsibility for enacting the budget of a recipient government.

(h) "Public hearing" means an open public meeting called by a recipient government to provide all citizens with an opportunity to offer written and oral comments regarding the subject to be discussed. A public hearing required under this subpart may be held concurrently with other meetings held by the recipient government for public purposes (such as town meetings, budget sessions and other regular meetings), provided that the recipient government complies with the public notice requirements of this subpart.

(i) "Publication" means giving notice or advising the public, and making information known to the citizens of the recipient government.

(j) "Use report" means a report required by the Director from each recipient government showing the amounts and purposes for which entitlement funds have been used.

§ 51.11 Reports to the Director; assurances; procedure for effecting compliance.

(a) *In general.* The Director may require each recipient government to submit such annual and interim reports as may be necessary to provide a basis for evaluation and review of compliance with, and effectiveness of, the provisions of the Act and regulations of this part.

(b) *Requisite assurances for receipt of entitlement funds.* In order to qualify for entitlement funds for an entitlement period, the chief executive officer of each recipient government, when requested by the Director, shall file a Statement of Assurances on a form to be provided. The Statement of Assurances will state the recipient government's intention to comply with specified requirements, prohibitions and restrictions of the Act and of Subparts D, E, and F of this part, with respect to the use of entitlement funds. The Director will afford the Governor of each State an opportunity for review and comment to the Office of Revenue Sharing on the adequacy of the assurance by units of local government, other than Indian Tribes and Alaskan native villages, located in his State.

(c) *Procedure for effecting compliance.* (1) If a recipient government fails to comply with the public participation requirement of this subpart, the Director shall apply the procedures for effecting compliance set forth in § 51.3 of subpart A and hearing procedures of subpart G of this part.

(2) The failure of the recipient government to comply with the assurance and reporting requirements of this part shall result in the implementation of the pertinent constructive waiver provisions of § 51.25(b) of subpart C of this part.

§ 51.12 Use reports.

(a) *In general.* Each recipient government shall submit a report to the Director (or to the Bureau of the Census or other agency that the Director may designate) setting forth the amounts and purposes for which entitlement funds have been appropriated, spent or obligated during its fiscal year. Such report shall also show the relationship of the entitlement funds to the relevant functional items in the recipient government's budget and shall identify differences between actual use of entitlement funds and the use of such funds as planned in the enacted budget. The report shall be filed on the form prescribed and approved by the Director, and shall be submitted within the requested time period. Failure to file the report as prescribed by the Director may jeopardize future entitlement payments pursuant to § 51.3(c) of this part.

(b) *Public inspection.* A copy of the use report and documentation necessary to support it shall be made available for public inspection. Within 10 days after the use report is filed, this information shall be placed at the principal office of the recipient government for public inspection during normal business hours. Where feasible, local public libraries and other public buildings should be used also. If the recipient government has no principal office, the report and supporting documentation shall be made available for public inspection at a public place or places within the political boundaries of the recipient government to satisfy the requirements of this paragraph.

(c) *Notice of availability of use reports.* The recipient government shall publish notice which indicates that the actual use report is available for public inspection. Such notice shall be published within 10 days of the filing of the report with the Director (or other designated agency) and specify the location(s) and hours during which the report and its supporting documentation are available to the public. Publication of the notice shall be made in a newspaper of general circulation serving the recipient government's geographic area. Where newspaper publication is impractical and infeasible, alternative methods of publication shall be used as provided in § 51.13(c)(2) of this subpart.

(d) *Submission of use reports to Governor.* The Director (or such agency as the Director may designate) shall furnish the reports required under paragraph (a) of this section, except those reports relating to Indian tribes and Alaskan native villages, to the Governor of the State in which a recipient government is located, in the manner and form prescribed by the Director.

§ 51.13 Proposed use hearing.

(a) *In general.* Each recipient government which expends entitlement funds in any fiscal year pursuant to a budget enacted on or after January 1, 1977, shall have at least one public hearing on the possible uses of such funds. At the public hearing, citizens of the recipient government shall have the opportunity to provide the executive authority written or oral comments and suggestions respecting the possible uses of entitlement funds. The public hearing shall be conducted not less than seven calendar days before the budget is presented to the legislative body.

(b) *Public notice.* Notice of the public hearing shall be published in at least one newspaper of general circulation serving the recipient government's geographic area, no later than 10 days prior to the scheduled date of the hearing. Such notice shall include the date, place, and time of the public hearing, the amount of unappropriated entitlement funds in the recipient government's revenue sharing trust fund, and the amount of entitlement funds which the recipient government expects to receive during its fiscal year. In addition, the notice shall specify that citizens attending the public hearing shall have the right to provide written and oral comments and suggestions respecting possible uses of entitlement funds.

(c) *Waiver of proposed use hearing and notice requirements; alternative method of publication.* (1) The Director, upon written application by the chief executive officer of a recipient government, may grant a waiver of the proposed use hearing requirements for one or more entitlement periods, if it can be determined from the facts submitted that the unavoidable expenses associated with holding the public hearing would exceed fifteen (15) percent of the recipient government's entitlement. A cost estimate of the unavoidable expenses must accompany the waiver application. For purposes of this paragraph, "unavoidable expenses" are those incurred in holding the public hearing, such as space, furniture and equipment rentals, overtime compensation, and similar direct costs including the costs of publication of the public notice. The waiver must be requested and approved before the proposed appropriation of entitlement funds occurs.

(2) The newspaper publication requirements for the notice of the proposed use hearing may be waived by the Director upon written application by the chief executive officer of the recipient government. The application shall indicate the circumstances making newspaper publication impractical or infeasible, and provide for an alternative method of notification which informs citizens of the recipient government of the date, place, time, and subject of the public hearing. The waiver must be requested and approved before the proposed appropriation of entitlement funds occurs.

§ 51.14 Budget hearing.

(a) *Budget hearing procedure.* Each recipient government which expends entitlement funds in any fiscal year pursuant to a budget enacted on or after January 1, 1977 shall have at least one public hearing on the government's proposed uses of entitlement funds in relation to its entire budget. The budget

hearing shall be conducted by the legislative body, or the appropriate committee thereof, prior to enactment of the budget. For those recipient governments which have a bicameral legislature, the hearing shall be held before the appropriate committee in each house of the legislature, or before an appropriate joint committee on both houses of the legislature. All citizens of the recipient government shall have a reasonable opportunity to provide written and oral comments, and to ask questions concerning the entire budget and the relationship of entitlement funds to the entire budget. The budget hearing required by this paragraph shall be held at a date, place, and time that permits and encourages public attendance and participation by all citizens.

(b) *Alternative procedures for budget hearing.* A recipient government may use an alternative budget hearing process without obtaining prior approval from the Director if:

(1) The recipient government, pursuant to State or local law, governing the expenditure of its own revenues, is required to have a budget process which includes a public hearing; and that public hearing provides all citizens the opportunity to provide oral and written comments and ask questions concerning the proposed use of all funds, including the use of entitlement funds and their relationship to the entire budget; and

(2) Documentation that the recipient government's alternative budget hearing procedures comply with State or local law shall be made available for public inspection during normal business hours at the principal office of the recipient government and submitted to the Director upon request.

(3) The use of alternative budget hearing procedures for complying with the public hearing requirements of this section does not exempt a recipient government from complying with the public notice requirements of this section relating to the budget hearing.

(c) *Public notice and inspection.* (1) Notice of the budget hearing shall be published in a newspaper of general circulation serving the recipient government's geographic area no later than 10 days prior to the scheduled date of the hearing. Such notice shall specify the date, place, and time of the public hearing, and that citizens attending the hearing have the right to provide written and oral comments and ask questions concerning the entire budget and the relationship of entitlement funds to the entire budget. The notice shall state how, in the context of its proposed budget, the recipient government intends to use its entitlement funds, and shall require a budget summary of its entire proposed budget. In addition, the notice shall advise when and where the above information, together with a copy of the entire proposed budget, shall be made available for public inspection.

(2) At least 10 days prior to the budget hearing a recipient government shall make available for public inspection during normal business hours, at the principal office of such government, a statement of the government's proposed uses of entitlement funds in the context of its proposed budget, a summary of its entire proposed budget, and a copy of its entire proposed budget. If a recipient government has no principal office then making the above materials available at a public place within the political boundaries of the recipient government shall satisfy the requirements of this paragraph. Where feasible, local public libraries and other public buildings should be used for the purpose of providing additional places for public inspection of these materials.

(d) *Modification of time limitation for public notice and inspection.* Whenever State or local law provides for a specified time period within which a recipient government is required to publish notice of a budget hearing or to permit public inspection of its proposed budget for a specified time period, the recipient government shall comply with the time period for publication or public inspection required by its State or local law, provided that it is not less than three (3) working days.

(e) *Waiver of newspaper publication; alternative forms.* (1) The newspaper publication requirement governing notice of the budget hearing and the summary of the proposed budget may be waived by the Director upon receipt of a written request by the chief executive officer of the recipient government. The request shall include a cost estimate verified by a newspaper, which shows the cost of publication will exceed fifteen (15) percent of the amount of entitlement funds included in the proposed budget. In addition, the request shall propose an alternative method of publication which provides the citizens of the jurisdiction with adequate notice of the budget hearing and the opportunity to review the budget summary.

(2) When newspaper publication of the notice of the budget hearing and the budget summary is impractical or infeasible, the Director may waive the newspaper publication requirement upon receipt of a written request by the chief executive officer of the recipient government. The request shall indicate the circumstances which make publication in a newspaper impractical or infeasible and shall propose an alternative method of publication. The waiver must be requested and approved before the proposed appropriation of entitlement funds occurs.

(f) *Summary of enacted budget.* Within 30 days after enactment of a budget as provided by State or local law, a summary of the enacted budget showing the intended uses of entitlement funds and information necessary to support the information and data in the summary shall be made available for public inspection during normal business hours at the principal office of the recipient government. If a recipient government has no principal office, the summary of the enacted budget and the enacted budget document shall be made available for public inspection at a public place within the political boundaries of the recipient government to satisfy the requirements of this paragraph. Where feasible, local public libraries and other public buildings should be used for the purpose of providing additional places at which the public may inspect the budget summary and the enacted budget.

(g) *Published notice of availability of summary of enacted budget.* Public notice shall be published in a newspaper of general circulation serving the geographic area of the recipient government within 30 days after enactment of the budget. The notice shall state where and when the summary of the enacted budget is available for public inspection. Where newspaper publication is impractical or infeasible alternative methods of publication shall be used as provided in § 51.13(c)(2).

§ 51.15 Amendments or modification to enacted budget.

Where applicable State or local law exists which governs amendments or modification of existing budgets, and requires public notice, at least one public hearing, and the availability of the amendments or modifications for public inspection, the recipient government shall comply with the State or local law. In the absence of applicable State or local law, the provisions of § 51.14 of this subpart shall apply to any amendment, modification or revision of an enacted budget when a major change is proposed. For the purposes of this section, a major change is any change in the enacted budget which, on a cumulative basis, affects the use of 25 percent and a minimum of $1,000 of the entitlement funds as originally enacted in the budget of the recipient government.

§ 51.16 Participation by senior citizens.

In conducting any hearing or proceeding required under this subpart or under its own budget processes, a recipient government shall endeavor to provide senior citizens and organizations representing the interests of senior citizens with an opportunity to be heard and present their views regarding the use of entitlement funds prior to final allocation of such funds.

§ 51.17 Notification of news media.

At the same time that any public report, notice of hearing or budget information is required to be published in a newspaper under this subpart, each recipient government shall advise the news media, including minority, bilingual and foreign language news media, serving its geographic area and shall provide copies of such reports, notice, or budget information to the news media on request.

§ 51.18 Legal notice rules not applicable.

Whenever any section of this subpart requires the newspaper publication of a report, public notice, budget summary, or any other required information, the recipient government may publish the required information in a newspaper of general circulation serving its geographic area without regard to State or local statutory requirements for the publication of legal notices. Prominently displayed advertisements or news articles may be used to provide newspaper notice required by this subpart. Such article or advertisement must contain all of the required information.

§ 51.19 Reports to the Bureau of the Census.

It shall be the obligation of each recipient government to comply promptly with requests by the Bureau of the Census (or by the Director) for data, information and reports relevant to the determination of entitlement allocations or use of entitlement funds. Failure of any recipient government to comply may place in jeopardy its receipt of entitlement funds.

Subpart C—Computation and Adjustment of Entitlement Funds

§ 51.20 Data.

(a) *In general.* The data used in determination of allocations and adjustments thereto payable under this part will be the latest and most complete data supplied by the Bureau of the Census, the Bureau of Indian Affairs, the Bureau of Economic Analysis and the Internal Revenue Service which are available prior to the allocations for one entitlement period unless, in the judgment of the Director, the data provided by those agencies are not current enough or are not comprehensive enough to provide for equitable allocations.

(b) *Computation and payment of entitlements.* (1) Allocations will not be made to any unit of local government if the available data is so inadequate as to frustrate the purpose of the Act. Such units of local government will receive an entitlement and payment when current and sufficient data become available as necessary to permit an equitable allocation.

(2) Payment to units of local government for which the Director has not received an address confirmation will be delayed until proper information is available to the Director.

(3) Where the Director determines that the data provided by the agencies listed in paragraph (a) of this section are not current enough, or are not comprehensive enough, or are otherwise inadequate to provide for equitable allocations the Director may authorize the use of other data, including estimates. The Director's determination shall be final and such other additional data and estimates as are used, including the sources, shall be publicized by notice in the Federal Register.

(4) *Currency of tax collection.* Only that tax collection data, which is received in the most recent reporting year available from the appropriate agencies prior to the allocation for an entitlement period, shall be used in the determination of entitlements for that entitlement period.

(c) *Special rule for less than one year entitlement periods.* For entitlement periods which encompass less than one year, the adjusted taxes and intergovernmental transfers of any unit of local government for the entire reporting year will be used. The limitation that the amount allocated to a recipient government shall not exceed 50% of the sum of the recipient government's adjusted taxes and intergovernmental transfers of revenues shall be reduced proportionately for entitlement periods which are less than one year.

(d) *Units of local government located in more than one county area.* In cases where a unit of local government is located in more than one county in one or more States, each part of such unit in each county is treated for allocation purposes as a separate unit of government, and the adjusted taxes, and intergovernmental transfers of such parts are estimated on the basis of the ratio which the population of that part bears to the entire population of the local government.

§ 51.21 Data affected by major disaster.

(a) *In general.* Any change in data otherwise eligible for use in determining the entitlement of a recipient government after April 1, 1974, shall be disregarded for a period of 60 months if that change:

(1) Resulted from a major disaster as determined by the President under section 301 of the Disaster Relief Act of 1974 (Pub. L. 93–288) and

(2) Results in a data factor which is less beneficial to the recipient government than the pre-disaster data factor for purposes of the revenue sharing allocation process.

(b) *Less beneficial data factor.* For the purposes of this section, a pre-disaster data factor is defined as a data factor of record for the final revenue sharing allocation which was calculated for a time period immediately preceding the data factor time period in which the disaster occurred and, therefore, could not have been affected by the disaster.

(c) *Eligibility requirements.* To be eligible for the data stabilization benefit of paragraph (a) of this section, a recipient government shall:

(1) Be located within a State designated by the President as a major disaster area, and

(2) Be located within a geographical subdivision of the State as certified to the Office of Revenue Sharing as a major disaster area by the Administrator of the Disaster Assistance Administration of the Department of Housing and Urban Development.

Further, each recipient government within the specific geographic area so designated will be notified, pursuant to the data improvement program, provided for in section 51.29, of each of its data factors developed subsequent to the major disaster designation, which are less beneficial than the pre-disaster data factors. The chief executive officer of the recipient government must verify that the data was adversely affected by the major disaster. In addition, the Director may require that the verifications be accompanied by substantiating documentation evidencing a causal relationship between the major disaster and the less favorable value of the current revenue sharing data factor of record. The Director, upon being satisfied that all of the requirements of this section have been met with respect to any post-disaster data factor, shall refrain from using the post-disaster data factor in the allocation process, of an entitlement period, and shall continue to use the pre-

disaster data factor in the allocation process for each entitlement period that begins during the 60-month period after the President's designation of the specific major disaster area unless:

(i) A data factor for a current entitlement period is more beneficial than the pre-disaster data factor, or

(ii) A post-disaster data factor of an entitlement period is not verified by the chief executive officer as having been adversely affected by the major disaster.

(d) *Multiple disasters.* Recipient governments may be in areas designated by the President as specific major disaster areas as the result of two or more disasters. Recipient governments in such areas will also be provided their appropriate pre-disaster data for verification. The 60-month period for which more beneficial pre-disaster data may be used for a government shall be determined by the most recent designation by the President of a specific major disaster area containing that government.

(e) *Effect on later entitlement periods of failure to verify.* A recipient government which does not verify that an adverse data change is caused by a disaster in an entitlement period when it was afforded an opportunity to make the verification does not lose the opportunity to verify in a later entitlement period that a disaster has affected the data factor for that later entitlement period.

(f) *Per capita income data.* Increases in per capita income data subsequent to disasters for governments in designated disaster areas will not be considered adverse data changes resulting from a disaster for purposes of section 145 of the Act.

(g) *60-month period.* The post-disaster data factor shall be used for the first entitlement period beginning after the end of the 60 months referred to in § 51.21(a).

§ 51.22 Adjusted taxes.

(a) *In general.* Tax revenues are compulsory contributions to a unit of local government exacted for public purposes, as such contributions are determined by the Bureau of the Census for general statistical purposes. The term "adjusted taxes" means the tax revenues adjusted by excluding an amount equal to that portion of the compulsory contributions which is properly allocable to school operations, debt service on school indebtedness, school capital outlays, and other educational purposes.

(b) *Procedure for exclusion of tax revenues for education.* The tax revenues exacted by a unit of local government shall be adjusted to exclude any such tax revenues used for financing education in a manner consistent with the following provisions:

(1) Where a unit of local government finances education from a specific fund and lists tax revenues to the fund or levies a separate tax for purposes of education, this amount will constitute the tax revenues for education.

(2) If tax revenues for purposes of education are not separately identifiable because education is financed by expenditure or transferring of moneys from a general fund (or similarly named fund) to a school fund or funds, then the ratio of tax revenues (as defined in paragraph (a) of this section) to the total revenues in the fund shall be calculated, and that ratio multiplied by the expenditure or transfer of non-dedicated moneys from the fund to the school fund shall be equated with the tax revenues properly allocable to expenses for education. The phrase "total revenues in the fund" means cash and securities on hand in the general fund (or similarly named fund) at the beginning of the fiscal year, plus all non-dedicated revenues to the fund (other than trust or agency revenues) less cash and securities on hand at the end of the fiscal year. Trust and agency funds are those held specifically for individuals or governments for which no discretion can be exercised as to the amounts to be paid to the recipient.

(3) If any instance where neither paragraph (b)(1) nor (2) of this section permits determination of school taxes, then any procedure deemed equitable by the Director shall be utilized to ascertain adjusted taxes.

(c) *Validity of adjusted tax data.* Allocation of funds under the Act will be based on data reported by States and units of local government to the Bureau of the Census and shall be in accordance with definitions established by the Bureau. No unit of government shall report to the Department of the Treasury or the Bureau of the Census in a manner which attempts to circumvent or frustrate the intent of this section.

§ 51.23 Date for determination of allocation.

(a) *In general.* Pursuant to the provisions of § 51.20(a) and (b)(3), the determination of the data definitions upon which the allocations and entitlements for an entitlement period are to be calculated shall be made no later than the day immediately preceding the beginning of the entitlement period. Any change in the computation of local tax effort to credit county sales taxes to units of local government pursuant to section 109(e)(2)(B) of the Act (the "Memphis Rule") will be considered to be a change in a data definition and will not be given effect for any entitlement periods for which there are final data definitions. The final date upon which initial allocations for an entitlement period are calculated for payment purposes shall be determined by the Director as soon as practicable and shall be publicized by notice in the Federal Register.

(b) *Time limitation and minimum adjustment.* If it is established to the satisfaction of the Director by factual evidence and documentation that the data used in the computation of an allocation is erroneous, an adjustment will be made. No adjustment shall be made unless such evidence and documentation of erroneous data is provided the Director for determination within one year of the end of the entitlement period with respect to which the payment is made. No adjustment of any kind, which is less than $200, shall be made to an entitlement if in the judgment of the Director such adjustment will be burdensome, expensive, or otherwise impracticable.

(c) *Adjusted taxes and intergovernmental transfers.* The date for determining the amount of adjusted taxes and intergovernmental transfers of a unit of local government will be the fiscal year that can be uniformly assembled for all units of local government prior to the beginning of the affected entitlement period.

§ 51.24 Boundary changes, governmental reorganization, etc.

(a) *In general.* A boundary change, governmental reorganization, or change in State statutes or constitution, relevant to the computation of entitlement of a unit of local government under the Act, which occurs during an entitlement period shall, not result in a change to the entitlement of that government until the next entitlement period. However, payment(s) tendered to such government for the entitlement period may be redistributed pursuant to the provisions of paragraphs (b) and (c) of this section.

(b) *New units of local government.* A unit of local government which came into existence during an entitlement period shall first be eligible for an entitlement allocation for the next entitlement period. However, if such unit is a successor government, it shall be eligible to receive the entitlement payment of the unit or units of local government to which it succeeded in accordance with the conditions of the succession.

(c) *Dissolution of units of local government.* A unit of local government which dissolved, was absorbed or ceased to exist as such during an

entitlement period is eligible to receive an entitlement payment for that entitlement period; *provided* that such unit of local government is in the process of winding up its governmental affairs or a successor unit of local government has the legal capacity to accept and use such entitlement funds. Entitlement payments which are returned to the Director because of the cessation of existence of a unit of local government shall be placed in the State and Local Government Fiscal Assistance Trust Fund until such times as they can be redistributed according to the conditions under which the unit of local government ceased to exist.

(d) *Limitations on adjustment for annexations.* (1) Annexations by units of local government having a population of less than 5,000 on April 1, 1970, shall not affect the entitlement of any unit of local government for an entitlement period unless the Director determines that adjustments pursuant to such annexations would be equitable and would not be unnecessarily burdensome, expensive, or otherwise impracticable.

(2) Annexations of areas with a population of less than 250, or less than 5 percent of the population of the gaining government, shall not affect the entitlement of any unit of local government unless the Director determines that adjustments pursuant to such annexations would be equitable and would not be unnecessarily burdensome, expensive, or otherwise impracticable.

(e) *Certification.* Units of local government affected by a boundary change, governmental reorganization, or change in State statutes or constitution shall, before receiving an entitlement adjustment or payment redistribution pursuant to this section, obtain State certification that the change was accomplished in accordance with State law. The certifying official shall be designated by the Governor, and the certification shall be submitted to the Bureau of the Census.

§ 51.25 Waiver of entitlement; nondelivery of checks; insufficient data.

(a) *Waiver.* Any unit of local government or Indian tribe or Alaskan native village may waive its entitlement for any entitlement period; provided that the chief executive officer with the consent of the governing body of the government notifies the Director that the entitlement payments for a past, current, or next beginning entitlement period, or any combination thereof, are being waived. A waiver of entitlement for the next beginning entitlement period will only be given effect if the waiver notice is received during the 6-month period immediately preceding that entitlement period. In the event that an entitlement payment is returned or a notice of waiver is executed which is not in accordance with this procedure, the chief executive officer will be notified by the Director and, unless the attempted waiver is rescinded within 30 days of the notice, it shall be given effect. However, in no event will a notice of waiver be given effect for an entitlement period which is subsequent to the next beginning entitlement period. The entitlement waived, and any adjustments resulting from recalculation of earlier entitlements, shall be added to and shall become a part of the entitlement of the next highest unit of government eligible to receive entitlement funds in that State in which the unit of local government, Indian tribe or Alaskan native village waiving entitlement is located. A waiver of entitlement by a unit of local government, Indian tribe or Alaskan native village shall be deemed irrevocable 30 days prior to the first payment for the entitlement period to which it relates.

(b) *Constructive waiver.* Any recipient government which has not waived and is otherwise eligible to receive entitlement payments and which has failed to provide reports or assurances required pursuant to Subparts B, E or F, is subject to a determination of having constructively waived its entitlement funds for one or more of the entitlement payments of that entitlement period. Prior to such a determination, the Director shall, in two separate notices of not less than 30 days each, notify nonresponsive recipient governments of their noncompliance and that their entitlement payment(s) for the affected entitlement period(s) are being temporarily withheld pursuant to § 51.3(c). If compliance is not achieved by the end of each affected entitlement period, the Director shall make a determination that the payments to the nonresponsive recipient governments are continued to be constructively waived. Entitlement funds constructively waived will be redistributed pursuant to the provisions of paragraph (a) of this section.

(c) *Nondelivery.* Entitlement funds for any entitlement period which are returned to the Department of the Treasury as being nondeliverable because of incorrect address information, or which are unclaimed for any reason, shall be placed in the State and Local Government Fiscal Assistance Trust Fund until such time as payment can be made.

(d) *Insufficient data.* Entitlement funds for any entitlement period which are withheld from payment because of insufficient data upon which to compute the entitlement, or for which payment cannot be made for nay other reason, shall remain in the State and Local Government Fiscal Assistance Trust Fund until such time as payment can be made.

§ 51.26 Reservation of funds and adjustment of entitlement.

(a) *Reservation of entitlement funds.* In order to make subsequent adjustments to an entitlement payment under this part which may be necessitated because of insufficient or erroneous data, or for any other reason, the Director shall reserve in the State and Local Government Fiscal Assistance Trust Fund such percentage, not to exceed 0.5 percent, of the total entitlement funds for any State government and all units of local government within the State for any entitlement period as in her judgment shall be necessary to insure that there will be sufficient funds available so that all recipient governments will receive their full entitlements. The reserve shall be known as the State Obligated Adjustment Reserve and amounts remaining in that reserve will accumulate until the liabilities of the Trust Fund to the recipient governments in that State are discharged or sufficiently diminished to permit an allocation.

(b) *Adjustments to entitlement payments.* (1) Adjustments to the entitlement of a recipient government during the current entitlement period will ordinarily be effected through alteration to entitlement payments for the next entitlement period, unless there is a downward adjustment which is so substantial as to make payment alterations impracticable or impossible. In such case, the Director may demand that the remaining entitlement funds by the recipient government in excess of its entitlement be immediately repaid to the Trust Fund of the Department.

(2) For entitlement periods which begin after December 31, 1976, any adjustments to increase or decrease entitlement payments of a recipient government for a particular entitlement period shall be made only if demand therefor has been made by the recipient government, or the Director, prior to the expiration of one year from the end of the entitlement period for which the adjustment is claimed.

(3) For entitlement periods which begin after December 31, 1976, any adjustments to increase or decrease entitlement payments of a recipient

government for a particular entitlement period shall be made through the State Obligated Adjustment Reserve.

(4) Adjustments made to decrease payments to a recipient government for an entitlement period ending before January 1, 1977 shall be withheld from the Obligated Adjustment Reserve established under § 51.26(a) of this part. (38 F.R. 18668)

§ 51.27 State to maintain transfers to local governments.

(a) *General rule for entitlement periods commencing on or after January 1, 1977.* The entitlement of any State government for any entitlement period beginning on or after January 1, 1977 shall be reduced by the amount (if any) by which—

(1) One-half of the aggregate amounts transferred by the State government out of its own sources during the 24-month period ending the last day of the last fiscal year for which the Bureau of the Census has relevant data, on the first day of such entitlement period, to all units of local government in such State is less than:

(2) One-half the similar aggregate amount for the 24-month period ending the day before the 24-month period described in paragraph (1) above.

For purposes of paragraph (a)(1) of this section, the amount of any reduction in the entitlement of a State government under this section for any entitlement period shall, for subsequent entitlement periods, be treated as an amount transferred by the State government in such State. The phrase "own sources" means all sources of State revenue (including debt proceeds and State's revenue sharing entitlement funds) but excluding intergovernmental revenues received from the Federal government.

(b) *Measurement of maintenance of effort.* The following formula will be applied by the Director to establish the base year intergovernmental transfers to units of local government from the State's own sources and to generally monitor the level of effort in accordance with the maintenance provisions of paragraph (a) of this section during future entitlement periods:

(1) It shall be assumed that the ratio of a State's own source intergovernmental transfers to units of local government to that State's total intergovernmental transfers to units of local government is equal to the ratio of that State's own source revenues to its total revenues. Thus, for a State in which such formula may be applied, its base year own source intergovernmental transfers to units of local government shall be assumed to equal its total intergovernmental transfers to units of local government in the base year multiplied by its own source revenue in the base year divided by its total revenues in the base year.

(2) In a State in which the formula is applied, the State's own source intergovernmental transfers to units of local government in a future entitlement period shall be assumed to equal the average of—

(i) The State's total intergovernmental transfers to units of local government during that period (or that State's fiscal year ending on or immediately prior to the end of such period) multiplied by its own source revenue in that period (or such fiscal year) divided by its total revenues in that period (or such fiscal year) and

(ii) The State's total intergovernmental transfers to units of local government during the preceding entitlement period (or that State's fiscal year ending on or immediately prior to the end of such period) multiplied by its own source revenue in that period (or such fiscal year) divided by its total revenues in that period (or such fiscal year).

(3) Therefore, in a State in which the formula is applied, maintenance (for a given entitlement period) of intergovernmental transfer effort to units of local government will be measured by the difference between that State's average aggregate intergovernmental transfers to units of local government (over the appropriate periods) as calculated by employing the method described in paragraph (b)(2) of this section and that State's own source intergovernmental transfers to units of local government in the base period as calculated by employing the method described in paragraph (b)(1) of this section.

(4) If the application of this formula during any entitlement period indicates that a State government has not maintained its intergovernmental transfer effort, i.e., should a State's intergovernmental transfers to units of local government, for a particular period, be less than transfers calculated for the base period, the difference (as defined in paragraph (b)(3) of this section) shall constitute the future indicated reduction in that State's entitlement unless such State can document to the Director that the fact or amount of nonmaintenance, as determined by application of the formula, is inaccurate.

(c) *Alternative procedure.* If the Director determines that the application of the formula set forth in paragraph (a) of this section in a particular case provides an inaccurate or unfair measurement of transfer effort, then any formula, procedure, or method deemed equitable by the Director may be utilized to measure such transfer effort for the purpose of implementing the maintenance provision.

(d) *Adjustment where State assumes responsibility for category of expenditures.* If the State government establishes to the satisfaction of the Director that since June 30, 1972, it has assumed responsibility for a category of expenditures which (before July 1, 1972) was the responsibility of local governments located in such State, then the aggregate amount taken into account under paragraph (a)(2) of this section, shall be reduced to the extent that increased State government spending (out of its own sources) for such category has replaced corresponding amounts, which for the period used for the purposes of this paragraph, it transferred to units of local government.

(e) *Adjustment where new taxing powers are conferred upon local governments.* If a State establishes to the satisfaction of the Director that since June 30, 1972, one or more units of local government within such State have had conferred upon them new taxing authority, then, the aggregate amount taken into account under paragraph (a)(2) shall be reduced to the extent of the larger of—

(1) An amount equal to the amount of the taxes collected by reason of the exercise of such new taxing authority by such local governments, or

(2) An amount equal to the amount of the loss of revenue to the State by reason of such new taxing authority being conferred on such local governments. No amount shall be taken into consideration under paragraph (e)(1) of this section if such new taxing authority is an increase in the authorized rate of tax under a previously authorized kind of tax, unless the State is determined by the Director to have decreased a related State tax.

(f) *Adjustment where Federal government assumes responsibility for category of expenditures.* If in an entilement period beginning on or after January 1, 1977, a State government establishes to the satisfaction of the Director that the Federal government has assumed responsibility for a category of expenditures for which such State government transferred amounts, during all or a part of the period utilized for purposes of paragraph (a)(1) of this section, which (but for this paragraph) would be included in the aggregate amount taken into account under paragraph (a)(2), the aggregate amount shall be reduced to the extent that increased Federal government spending has replaced corresponding amounts

which such State government had transferred to units of local government.

(g) *Computation by the Office of Revenue Sharing.* The Director shall make the computation required for the determination of maintenance of effort, based on data furnished by the Bureau of the Census. The Bureau of the Census shall provide to the Office of Revenue Sharing the following data pertaining to a State's transfer of funds to units of local government for the State's appropriate fiscal year:

(1) The State's own source funds.

(2) The State's total funds.

(3) The State's own source transfers to units of local government.

(4) The State's total transfers to units of local government.

(h) *Reduction in entitlement.* If the Director has reason to believe that paragraph (a) of this section require a reduction in the entitlement of any State government for any entitlement period, the Director shall give reasonable notice and opportunity for hearing to the State. If, after a hearing it is determined that a reduction is required, the Director shall determine the amount of the reduction, the Director shall determine the amount of the reduction, notify the Governor of the affected State of the determinations and withhold from subsequent payments to such State government under this part an amount equal to the reduction.

(i) *Transfer to general fund.* An amount equal to the reduction in the entitlement of any State government which results from the application of this section (after any judicial review) shall be transferred from the Secretary's Trust Fund to the general fund of the Treasury on the day on which such reduction becomes final.

§ 51.28 Optional formula.

(a) *In general.* A State government may by law provide for the allocation of entitlement funds among the county areas, or among units of local government (other than county governments, Indian tribes, and Alaskan native villages):

(1) On the basis of the population multiplied by the general tax effort factors of such areas or units of local government; or

(2) On the basis of the population multipulied by the relative income factors of such areas or units of local government; or

(3) On the basis of a combination of those two factors. Any State which provides by law for such a variation in the allocation formula provided by subsections 108(a) or 108(b)(2) and (3) of the Act, shall notify the Director of the new law no later than 90 days before the beginning of the first entitlement period to which it is to apply. Any such law shall:

(i) Provide for allocating 100 percent of the aggregate to be allocated under subsections 108(a) or 108(b)(2) and (3) of the Act;

(ii) Apply uniformly throughout the State; and

(iii) Apply during the period beginning on the first day of the first entitlement period to which it applies and ending on Septmeber 30, 1980.

(b) *Single legislation required.* If a State government alters its county area allocation formula or its local government allocation formula, or both, such alteration may be made only once and is required to be made in the same legislative enactment.

(c) *Certification required.* Paragraph (a) of this section shall apply within a State only if the Director certifies that the State law complies with the requirements of the paragraph. The Director shall not certify any such law with respect to which she receives notification later than 30 days prior to the initial entitlement period during which it is to apply.

§ 51.29 Adjustment of data factors.

The data factors and data definitions used in computing entitlements under the Act for any entitlement period will be made available to each State government and unit of local government as soon as practicable. Each such government will be given a reasonable opportunity to question those data factors by providing factual documentation demonstrating evidence of error no later than one year from the end of the entitlement period for which the data are applicable. If the Director determines that any data factors used were erroneous, necessary adjustments will be made.

§ 51.30 Adjustment of maximum and minimum per capita entitlement; 100 percent criterion.

(a) *County area maximum and minimum per capita entitlement.* (1) *In general.* Pursuant to section 108(b)(6) of the Act, the per capita amount allocated to any county area shall be not less than 20 percent, nor more than 145 percent, of two-thirds of the amount allocated to the State under section 106 of the Act, divided by the population of that State.

(2) *One hundred forty-five percent rule.* If a county area allocation is greater than the 145-percent limit, its allocation shall be reduced to the 145-percent level and the resulting surplus shall be shared proportionately by all remaining unconstrained county areas.

(3) *Twenty-percent rule.* If, after the application of paragraph (a)(2) of this section, a county area allocation is less than the 20-percent limit, its allocation shall be increased to the 20-percent level and the resulting deficit shall be shared proportionately by all remaining unconstrained county areas.

(b) *Local government (other than a county government).* (1) *In general.* Except as provided below, the per capita amount allocated to any unit of local government (other than a county government) shall be not less than 20-percent, nor more than 145-percent, of two-thirds of the amount allocated to the State under section 106 of the Act, divided by the population of that State.

(2) *One hundred forty-five percent rule.* If a unit of local government is allocated an amount greater than the 145-percent limit, its allocation shall be reduced to that level.

(3) *Twenty-percent rule.* If a unit of local government is allocated, an amount less than the 20-percent limit, its allocation shall be increased to the lower of the 20-percent limit or 50 percent of the sum of that unit's adjusted taxes and transfers.

(4) *50-percent rule.* If a unit of local government is allocated an amount greater than 50 percent of the sum of that government's adjusted taxes and intergovernmental transfers received by it (other than entitlement funds), its allocation shall be reduced to that level.

(c) *One hundred-percent criterion.* If the amounts allocated to recipient governments of a State do not total 100 percent of the amount allocated to that State, the amount to be allocated to county areas shall be adjusted appropriately, and the allocation process shall be repeated until the amounts allocated to recipient governments of a State total 100 percent of the amount allocated to that State.

§ 51.31 Separate law enforcement officers.

(a) *Entitlement of separate law enforcement officers.* (1) The office of the separate law enforcement officer within any parish area in the State of Louisiana, other than the parish of East Baton Rouge, shall be entitled to recieve for each entitlement period beginning on or after January 1, 1977, 15 percent of the entitlement of the government of the Parish government.

(2) The office of the separate law enforcement officer within the area of the government of the parish of East Baton Rouge, shall be entitled to receive for each entitlement period, beginning on or after January 1, 1977, 7.5 percent of the entitlements of the governments of Baton Rouge, Baker and Zachary, Louisiana for each such entitlement period.

(b) *Reduction of entitlement of parish government.* (1) The governments of each parish (other than Baton Rouge, Baker and Zachary, Louisiana) shall receive for an entitlement period entitlements reduced by one-half of the amount due the separate law enforcement officer for such parish.

(2) The governments of Baton Rouge, Baker and Zachary, Louisiana shall receive, for an entitlement period, entitlements reduced by an amount equal to 3.75 percent of such government's normal entitlement.

(c) *Reduction of entitlement of State government.* The State government of Louisiana shall receive for an entitlement period an entitlement reduced by the same amount as the entitlement of the parishes (including Baton Rouge, Baker and Zachary).

(d) *Entitlement of the Parish of Orleans.* The provisions of paragraph (a), (b), and (c) of this section shall not apply to the entitlements of the Parish of Orleans. The Parish of New Orleans shall be entitled to receive for each entitlement period beginning after December 31, 1976 an additional amount equal to 7.5 percent of the amount it is otherwise entitled to receive.

§ 51.32 Population of Indian tribes and Alaskan native villages.

(a) *In general.* The population of an Indian tribe or Alaskan native village is the resident population as of July 1, 1977, as determined by the Bureau of Indian Affairs.

(b) *Indian tribes.* For Indian tribes, the resident population is the number of Indians living within the boundaries of the tribal reservation, plus the number of Indians living on trust land (including public domain allotments) adjacent to the reservation and pertaining to the tribe. The adjacent trust land may be tribally owned or individually owned. Resident non-Indian members of families with an Indian head or spouse are also included in the population estimate.

(c) *Alaskan native villages.* For Alaskan native villages, the resident population is the number of Indians, Aleuts and Eskimos living within the boundaries of the village. Resident non-Alaskan native members of families with an Alaskan native head or spouse are also included in the population estimate.

Subpart D—Prohibitions and Restrictions on Use of Funds

§ 51.40 Matching funds.

The prohibition against the use of entitlement funds for matching purposes has been repealed. After January 1, 1977, a recipient government may expend its entitlement funds for this purpose without restriction.

§ 51.41 Permissible expenditures for units of local government.

The priority expenditure restrictions on the use of entitlement funds by units of local government have been repealed. After January 1, 1977, a recipient government may expend its entitlement funds for any purpose permissible under State or local law.

§ 51.42 Wage rate and labor standards.

(a) *Construction laborers and mechanics.* A recipient government shall require that all laborers and mechanics employed by contractors or subcontractors in the performance of work on any construction, renovation or repair project costing in excess of $2,000 and of which 25% or more of the cost is paid out of its entitlement funds:

(1) Will be paid at rates not less than those prevailing on similar construction in the locality as determined by the Secretary of Labor in accordance with the Davis–Bacon Act, as amended (40 U.S.C. 276a—276a–5); and

(2) Will be covered by labor standards specified by the Secretary of Labor pursuant to 29 CFR parts 1, 3, 5, and 7.

(b) *Wage rates.* In projects to which the Davis-Bacon Act standards are applicable, the recipient government must ascertain the U.S. Department of Labor's wage rate determination for each intended project and insure that such wage rates are incorporated in the contract specifications. Wage rate determinations may be obtained by filing a Standard Form 308 with the Employment Standards Administration of the applicable regional Office of the U.S. Department of Labor at least 30 days before the invitation for bids, or in the case of construction covered by general wage rate determination, the appropriate rate may be obtained from the **Federal Register.**

(c) *Government Employees.* A recipient government which employs individuals whose wages are paid in whole or in part from entitlement funds must pay wages which are not lower than the prevailing rates of pay for persons employed in similar public occupations by the same employer. However, this subsection shall apply with respect to employees in any category only if 25% or more of the wages of all employees of the recipient government in such category are paid from the trust fund established by it under § 51.100(a) of this part.

§ 51.43 Restriction on expenditures by Indian tribes and Alaskan native villages.

(a) *In general.* Indian tribes and Alaskan native villages as defined in § 51.2(b) of this part, are required to expend entitlement funds for the benefit of members of the tribe or village residing in the county area from which the allocation of entitlement funds was originally made.

(b) *Extension into two or more county areas.* Indian tribes and Alaskan native villages which extend into two or more county areas may expend their entitlement funds for the benefit of members of the tribe or village in any or all of those county areas provided members of the tribe or village are not excluded from these benefits solely on the basis of their residence in a particular county area.

(c) *Effect of Subpart E.* Expenditures which are made in accordance with paragraphs (a) and (b) of this section will not constitute a failure to comply with the requirements of Subpart E of this part.

§ 51.44 Lobbying.

(a) *In general.* Entitlement funds may not be used by any State or unit of local government for the purpose of lobbying (as defined in § 51.2(k) of this part) concerning the provisions of the Act.

(b) *Activities prohibited.* Prohibited lobbying activities include, but are not limited, to the following:

(1) Personal solicitation of individual members of a legislative body to influence legislation regarding the General Revenue Sharing Program by personal interview, letter, financial contributions, and other means.

(2) Employment of a lobbyist to engage in proscribed activities.

(c) *Activities permitted.* Without violation of this section, a recipient government may:

(1) Use revenue sharing funds to pay dues to national or State organizations.

(2) Use revenue sharing funds to attempt to influence public opinion or to convey opinions and judgments to the public regarding provisions of the Act, by publication, distribution of books, pamphlets and other writings.

§ 51.45 Use of entitlement funds for debt retirement.

Where the actual expenditures of the proceeds of indebtedness were made after January 1, 1977, the repayment of the indebtedess with entitlement funds is permissible, provided that the expenditures from the proceeds of the indebtedness were made in compliance with the restrictions and prohibitions set forth in Subparts D and E of this part.

Subpart E—Nondiscrimination by States and Local Governments Receiving Entitlement Funds

§ 51.50 Purpose.

The purpose of this subpart is to effectuate section 122 of the Act which provides that no person in the United States shall, on the grounds of race, color, national origin, or sex, be excluded from participation in, be denied the benefits of, or be subjected to discrimination under any program or activity of a recipient government. Any prohibition against discrimination on the basis of age under the Age Discrimination Act of 1975 or with respect to a qualified handicapped individual, as provided in section 504 of the Rehabilitation Act of 1973, or any prohibition against discrimination on the basis of religion (as modified by the exemptions and exclusions contained in the Civil Rights of 1964, as amended or the Civil Rights Act of 1968), shall also apply to any such program or activity.

§ 51.51 Definitions.

Unless the context provides otherwise, as used in this subpart, the term:

(a) "Attorney General" means the Attorney General, the Assistant Attorney General for Civil Rights or a designate.

(b) "Complaint" means an allegation submitted in writing to the ORS which sets forth the nature of the discrimination alleged and the specific facts upon which the allegation is based. The complaint may be filed by an individual or organization which believes that a recipient government has or is committing discrimination prohibited by the provisions of this subpart.

(c) "Compliance review" means a review of a recipient government's employment practices, facilities, or delivery of services for the purpose of ascertaining compliance with the provisions of this subpart.

(d) "Determination" means the decision made and issued by the Director after a recipient government has demonstrated compliance, or failed to enter into compliance, following receipt of a notice of noncompliance after a finding or a holding. The determination is to the effect that a recipient government is in compliance or in noncompliance with the provisions of this subpart.

(e) "Facility" includes all or any part of structures, equipment, or other real or personal property or interests therein.

(f) "Finding" means the decision made and issued by the Director after the completion of an investigation of alleged noncompliance by a recipient government with the provisions of this subpart or after a compliance review. The finding states that a recipient government is more likely than not to have violated a provision of this subpart.

(g) "Funded" means funds have been or are being made available for expenditure in, or substantially benefited, a program or activity of the recipient government or a secondary recipient.

(h) "Holding" means any finding of fact or conclusion of law by a Federal court, a State court, or a Federal administrative law judge (after notice and opportunity for a hearing), which has been litigated, pertains to a recipient government and is to the effect that there has been exclusion, denial, or discrimination on the grounds of race, color, national origin, sex, age, handicapped status or religion prohibited under section 122 of the Act. The holding is conclusive as to the issue of discrimination.

(i) "Investigation" means fact-finding efforts made after receiving an allegation that a recipient government has failed to comply with the provisions of this subpart, or other information relating to possible violation of the provisions of the Act.

(j) "Noncompliance" means the failure of a recipient government to comply with the provisions of this subpart.

(k) "Notification of noncompliance" means the notification given to a recipient government after issuance of a finding or receipt of a holding.

(l) "Program or activity" means the operations of the agency or organizational unit of a recipient government or the operations or organizational unit of a secondary recipient (examples include, but are not limited to a police department, department of corrections, health department, or a division of a public or private corporation).

§ 51.52 Discrimination prohibited.

(a) *In general.* No person in the United States shall, on the ground of race, color, national origin, or sex, be excluded from participation in, denied the benefits of, or be subjected to discrimination under any program or activity of a recipient government. Also prohibited is discrimination:

(1) On the basis of age under the Age Discrimination Act of 1975, effective July 1, 1979 (hereinafter referred to as discrimination on the basis of age);

(2) With respect to a qualified handicapped individual, as provided in section 504 of the Rehabilitation Act of 1973, as amended, (hereinafter referred to as discrimination on the basis of handicapped status), or

(3) On the basis of religion, as modified by exemptions and exclusions contained in the Civil Rights Act of 1964, as amended or the Civil Rights Act of 1968, (hereinafter referred to as discrimination on the basis of religion).

(b) *Specific discriminatory actions prohibited.* (1) Except as otherwise provided in § 51.55(c)(1) and other sections in this subpart with respect to services, a recipient government shall not on the ground of race, color, national origin, sex, handicapped status or age:

(i) Deny any service or other benefit provided.

(ii) Provide any service or other benefit, which is not equal to, or is provided in a different form, than that provided to others.

(iii) Subject any person to segregated or separate treatment in any facility or in any matter or process related to receipt of any service or benefit.

(iv) Restrict in any way the enjoyment of any advantage or privilege enjoyed by others receiving any service or benefit.

(v) Treat an individual differently from others in determining whether the individual satisfies any admission, enrollment, eligibility, membership, or other requirement or condition which individuals must meet in order to be provided any service or other benefit.

(vi) Determine the types of services, or other benefits or facilities which will be provided or the class of individuals to whom, or the situation in which, such services or other benefits or facilities will be provided by utilizing criteria or methods of administration which have the effect of:

(A) Subjecting individuals to discrimination;

(B) Perpetuating the results of past discrimination; or

(C) Defeating or substantially impairing the accomplishment of the objectives of the programs or activities with respect to individuals of a particular race, color, national origin, and sex, handicapped status or age.

(2) With respect to planning and advisory boards, a recipient government shall not on the ground of race, color, national origin, sex, handicapped status, or religion, deny any person an equal opportunity to participate as an appointed member of planning or advisory bodies in connection with the disposition of entitlement funds.

(3) With respect to employment, a recipient government shall not utilize criteria or methods of administration that have the effect of:

(i) Subjecting individuals to discrimination on the basis of race,

color, national origin, sex, handicapped status, or religion in any program or activity.

(ii) Perpetuating the results of past discriminatory practices.

(iii) Defeating or substantially impairing the accomplishment of the objectives of the program or activities with respect to individuals of a particular race, color, national origin, sex, age, handicapped status, or religion.

(4) With respect to facilities, a recipient government shall not on the grounds of race, color, national origin, sex, age, or handicapped status, except as provided in § 51.55 and other sections of this subpart, make selections of site or location of facilities which have the effect of:

(i) Excluding individuals from such facilities.

(ii) Denying the individuals the benefits of such facilities.

(iii) Subjecting individuals using the facilities to discrimination.

(5) A recipient government shall not intimidate, threaten, coerce, or in any way retaliate against any person who files a complaint against the government alleging a violation of the provisions of this subpart, or who assists the ORS in an investigation, or any other proceedings under this subpart.

(6) A recipient government shall not use any selection device, including, but not limited to, a minimum height or weight requirement or physical agility test which operates to disproportionately exclude members of a protected class, is a violation of this subpart, unless it is validated pursuant to the Uniform Guidelines on Employee Selection Procedures.

(7) The enumeration of specific forms of prohibited discrimination in this paragraph does not limit the generality of the prohibition in paragraph (a) of this section and should not be considered all inclusive.

(c) *Exemptions.* The provisions of paragraphs (a) and (b) concerning prohibited discrimination shall not apply:

(1) Where a recipient government demonstrates by clear and convincing evidence that a program or activity, with respect to which discrimination is alleged, is not funded in whole or in part with entitlement funds.

(2) To construction projects commenced prior to January 1, 1977, with respect to discrimination on the basis of handicapped status, except as provided in Section 51.55(k)(11). A construction project shall be deemed to have commenced when the recipient government has obligated itself by contract for the physical construction of the project or of any substantial portion of the project.

§ 51.53 Employment discrimination.

(a) *Employment practices.* In general a recipient government shall not discriminate on the grounds of race, color, national origin, sex or religion in the following specific activities:

(1) Recruitment, advertising, and the processing of applications for employment;

(2) Hiring, upgrading, promotion, award of tenure, demotion, transfer, layoff, termination, right of return from layoff, and rehiring;

(3) Setting rates of pay or any other form of compensation and changes in compensation;

(4) Job assignments, job classification, organizational structures, position descriptions, lines of progression, and seniority lists;

(5) Granting leaves of absence, sick leave, or other leave;

(6) Providing fringe benefits available by virtue of employment, whether or not administered by the recipient government;

(7) Selection and financial support for training, including apprenticeship, professional meetings, conferences, and other related activities and selection for leaves of absence to pursue training;

(8) Employer sponsored activities, including social recreational programs; and

(9) Any other term, condition, or privilege of employment.

(b) *Uniform guidelines on employee selection procedures.* The Equal Employment Opportunity Commission (EEOC), the Office of Personnel Management, the Department of Justice, the Department of Labor and the Department of Treasury, in carrying out their responsibilities in ensuring compliance with Federal equal employment opportunity law, have adopted Uniform Guidelines on Employee Selection Procedures to assist in establishing and maintaining equal employment opportunities. These regulations are in 29 CFR Part 1607; 5 CFR 300.103(c); 990–1 (Book 3) of the Federal Personnel Manual; 28 CFR 50.14, and 41 CFR 60.3. These Guidelines, among other things, recognize the unlawfulness of the use of any employee selection procedures (including tests and minimum education levels) which disqualify a disproportionate number of persons on grounds of race, color, religion, sex or national origin (not handicapped status or age) and which have not been validated or otherwise justified in accordance with Federal law. Recipient governments shall use selection procedures that comply with the provisions of the guidelines, which are attached as appendix A to this subpart.

(c) *Recruitment practices of recipient governments.* Recipient governments are encouraged to analyze their recruitment practices to determine whether they are making information about job opportunities equally available to minority groups and women. Where racial, ethnic or sex groups are being or have been denied employment opportunities, or are underutilized in a job classification or classifications, recruiting procedures designed to attract members of racial, ethnic or sex groups that have been denied employment opportunities shall be required to comply with these regulations.

(d) *Pre-employment inquiries.* Except in those limited instances where religion, sex or national origin are bona fide occupational qualifications (B.F.O.Q.) reasonably necessary for the performance or qualification for a particular job, a recipient shall not inquire of an applicant for employment concerning the applicant's race, color, national origin, sex, or religion. A recipient government should review its employment practices to insure that such information is not elicited from applicants for employment either directly, or by such indirect means as photographs, place of birth, citizenship (if used as a pretext for prohibited discrimination), organizational membership or activities, and arrest records.

(e) *Self-review.* Recipient governments should conduct continuing reviews of their programs or activities to determine if employee selection or promotional policies (or lack thereof) directly or indirectly have the effect of denying equal employment opportunity on the basis of race, color, national origin, sex or religion.

§ 51.54 Employment discrimination on the basis of sex.

The EEOC has adopted guidelines on employment discrimination on the basis of sex (29 CFR Part 1604). These guidelines provide practical assistance to enable recipient governments to bring themselves into compliance with Federal law. Recipient governments shall comply with the provisions of these Guidelines, which are adopted by the ORS and are attached as appendix B to this subpart.

§ 51.55 Discrimination with respect to a qualified handicapped individual.

(a) *Definitions.* As used in this section the phrase:

(1) "Handicapped individual" means any person who has a physical or

mental impairment that substantially limits one or more major life activities, has a record of such an impairment, or is regarded as having such an impairment.

(2) "Physical or mental impairment" means (i) any physiological disorder or condition, cosmetic disfigurement, or anatomical loss affecting one or more of the following body systems: neurological; musculoskeletal; special sense organs; respiratory, including speech organs; cardiovascular; reproductive; digestive; genito-urinary; hemic and lymphatic; skin; and endocrine; or (ii) any mental or psychological disorder, such as mental retardation, organic brain syndrome, emotional or mental illness, and specific learning disabilities. The term "physical or mental impairment" includes, but is not limited to, such diseases and conditions as orthopedic, visual, speech and hearing impairments, cerebral palsy, epilepsy, muscular dystrophy, multiple sclerosis, concer, heart disease, diabetes, mental retardation, emotional illness, drug addiction and alcoholism.

(3) "Major life activities" means functions such as caring for one's self, performing manual tasks, walking, seeing, hearing, speaking, breathing, learning, and working.

(4) "Has a record of such an impairment" means has a history of, or has been incorrectly classified as having, a mental or physical impairment that substantially limits one or more major life activities.

(5) "Is regarded as having an impairment" means (i) has a physical or mental impairment that does not substantially limit major life activities, but is treated by a recipient government as constituting such a limitation; (ii) has a physical or mental impairment that substantially limits major life activities only as a result of the attitudes of others toward such impairment; or (iii) has none of the impairments defined in paragraph (a) (1) of this section but is treated by a recipient government as having such impairment.

(6) *Qualified handicapped individual.* "Qualified handicapped individual" means (i) with respect to employment, a handicapped individual who, with reasonable accommodation, can perform the essential functions of the job in question; and (ii) with respect to services, a handicapped individual who meets the essential eligibility requirements for the receipt of such services.

(b) *General prohibitions with respect to discrimination against a qualified handicapped individual.* (1) Those general prohibitions described in § 51.52(b) of this subpart, also apply to discrimination against a handicapped individual, with the exception of §§ 51.52(b)(1)(ii), (iii) and (v). In addition, a recipient government shall:

(i) Not exclude a qualified handicapped individual from participation in programs or activities open to the general public, regardless of the availability of permissibly separate or different programs or activities designed especially for the handicapped;

(ii) Administer programs and activities in the most integrated setting appropriate to the needs of qualified handicapped individuals;

(iii) Take appropriate steps to ensure that communications with applicants, employees, beneficiaries, and the general public are available to persons with impaired vision or hearing;

(iv) Take the appropriate steps to assure that the public hearings required under §§ 51.13 and 51.14 of this part are accessible to qualified handicapped individuals and that notice of such hearings is made available to individuals with impaired vision and hearing;

(v) Provide appropriate auxiliary aids to individuals with impaired sensory, manual or speaking skills, where necessary to prevent a qualified handicapped individual from being denied the benefits of, excluded from participation in or subjected to discrimination under a program or activity;

(vi) Not provide a qualified handicapped individual with an aid, benefit, or service that is not as effective in affording equal opportunity to obtain the same result, to gain the same benefit, or to reach the same level of achievement as that provided to others;

(vii) Not provide a different or separate aid, benefit, or service to qualified handicapped individuals or to any class of qualified handicapped individuals than is provided to others unless such action is necessary to provide qualifed handicapped individuals with aid, benefits, or services that are as effective as those provided to others;

(viii) Not aid or perpetuate discrimination against a qualifed handicapped individual by providing entitlement funds to an agency, organization, or person that discriminates on the basis of handicap in providing any aid, benefit, or service to beneficiaries of the recipient government's program;

(ix) A recipient government may not, directly or through contractual or other arrangements, utilize criteria or methods of administration that:

(A) Have the effect of subjecting qualified handicapped individuals to discrimination on the basis of their handicaps;

(B) Have the purpose or effect of defeating or substantially impairing accomplishment of the objectives of the recipient government's program with respect to handicapped individuals; or

(C) Perpetuate the discrimination of a secondary recipient if both recipients are subject to common administrative control or are agencies of the same larger recipient government;

(x) Not use its zoning authority in a manner that will have the effect of subjecting qualified handicapped individuals to discrimination on the basis of handicap;

(2) The exclusion of nonhandicapped individuals from the benefits of a program limited by Federal statute or executive order to handicapped individuals, or the exclusion of a specific class of handicapped individuals from a program limited by Federal statute or executive order to a different class of handicapped individuals, is not prohibited by this section.

(3) For purposes of this section, aids, benefits, and services, to be equally effective, are not required to produce the identical result or level of achievement for handicapped and nonhandicapped individuals. They must, however, afford qualified handicapped individuals equal opportunity to obtain the identical result, or achievement in the most integrated setting appropriate to the individual's needs.

(4) The enforcement provisions contained in this subpart are applicable to violations of the provisions of this section.

(c) *Self-evaluation.* (1) A recipient government shall, within one year of the effective date of this section:

(i) Evaluate with the assistance of interested individuals, including handicapped individuals or organizations representing handicapped individuals, its current policies and practices and their effects that do not or may not meet the requirements of this section;

(ii) Modify, after consultation with interested individuals, including handicapped individuals or organizations representing handicapped individuals, any policies and practices that do not meet the requirements of this section; and

(iii) Take appropriate remedial steps, after consultation with interested individuals, including handicapped individuals or organizations representing handicapped individuals, to eliminate the effects of any discrimination that resulted from

adherence to these discriminatory policies and practices.

(2) A recipient government that employs the equivalent of fifteen employees on a full-time basis shall, for at least three years following completion of the evaluation required under paragraph (c)(1) of this section, maintain on file, make available for public inspection, and provide to the Director upon request: (i) a list of the interested individuals consulted, (ii) a description of policies and practices examined and problems identified, and (iii) a description of modifications made and remedial steps taken.

(d) *Designation of responsible employee and adoption of grievance procedures.* (1) *Designation of responsible employee.* A recipient government that employs the equivalent of fifteen or more employees on a full-time basis shall designate at least one person to coordinate its efforts to comply with this section.

(2) *Adoption of grievance procedures.* A recipient government that employs the equivalent of fifteen or more employees on a full-time basis shall adopt a grievance procedure that incorporates appropriate due process standards and that provides for the prompt and equitable resolution of complaints alleging any action prohibited by this section. Such procedures need not be established with respect to complaints from applicants for employment or from applicants for admission to postsecondary educational institutions.

(e) *Notice.* (1) A recipient government that employs the equivalent of fifteen or more employees on a full-time basis shall take appropriate initial and continuing steps to notify participants, beneficiaries, applicants, and employees, including those with impaired vision or hearing, and unions or professional organizations holding collective bargaining or professional agreements with the recipient government, that it does not discriminate on the basis of handicapped status in violation of section 122 and this section. The notification shall state, where appropriate, that the recipient government does not discriminate on the basis of handicapped status in admission or access to, or treatment or employment in, its programs and activities. The notification shall also include an identification of the responsible employee designated pursuant to § 51.55(e). A recipient government shall make the initial notification required by this paragraph within 90 days of the effective date of this section. Methods of initial and continuing notification may include the use of public service radio and television announcements, the posting of notices, publication in newspapers and magazines, placement of notices in recipient governments' publications, and distribution of memoranda or other written and taped communications.

(2) If a recipient government publishes or uses recruitment materials or publications containing general information that it makes available to participants, beneficiaries, applicants, or employees, or the general public, it shall include in those materials or publications a statement of the policy described in paragraph (a) of this section. A recipient government may meet the requirements of this paragraph either by including appropriate inserts in existing materials and publications or by revising and reprinting the materials and publications.

(f) *Administrative requirements for small recipient governments.* The Director may require any recipient government which employs the equivalent of fifteen or fewer full-time employees, to comply with §§ 51.55 (d), (e) and (f), in whole or in part, when the Director finds a violation of this part or finds that such compliance will not significantly impair the ability of the recipient government to provide benefits or services.

(g) *Employment discrimination against a qualified handicapped individual.* (1) A recipient government shall:

(i) Not discriminate against a qualified handicapped individual in employment in any program or activity.

(ii) Not participate in a contractural or other relationship that has the effect of subjecting a qualified handicapped applicant or employee to discrimination prohibited by this subpart. The relationships referred to in this paragraph include relationships with employment and referral agencies, with labor unions, with organizations providing or administering fringe benefits to employees of the recipient government, and with organizations providing training and apprenticeship programs.

(iii) Take appropriate steps to ensure that communications with its applicants and employees are available to persons with impaired vision and hearing.

(iv) Not discriminate against a qualified handicapped individual in the following specific activities:

(A) Recruitment, advertising, and the processing of applications for employment;

(B) Hiring, upgrading, promotion, award of tenure, demotion, transfer, layoff, termination, right of return from layoff, and rehiring;

(C) Setting rates of pay or any other form of compensation and changes in compensation;

(D) Job assignments, job classifications, organizational structures, position descriptions, lines of progression, and senority lists;

(E) Granting leaves of absence, sick leave, or any other leave;

(F) Providing fringe benefits available by virtue of employment, whether or not administered by the recipient government;

(G) Selection and financial support for training, including apprenticeship, professional meetings, conferences, and other related activities, and selection for leaves of absence to pursue training;

(H) Employer sponsored activities, including social or recreational programs; and

(I) Any other term, condition, or privilege of employment.

(2) A recipient government's obligation to comply with this subpart is not affected by any inconsistent term of any collective bargaining agreement to which it is party.

(3) A recipient government's obligation to comply with this part is not obviated or alleviated because employment opportunities in any occupation or profession are or may be more limited for handicapped individuals than for nonhandicapped individuals.

(h) *Reasonable accommodation.* (1) A recipient government shall make reasonable accommodation to the known physical or mental limitations of a qualified handicapped applicant or employee unless the recipient government can demonstrate that the accommodation would impose an undue hardship on a operation of its program.

(2) Reasonable accommodation may include:

(i) Making facilities used by employees readily accessible to and usable by handicapped persons, and

(ii) Job restructuring, part-time or modified work schedules, acquisition or modification of equipment or devices, the provision of readers or interpreters, and other similar actions.

(3) In determining, pursuant to paragraph (h)(1) of this section, whether an accommodation would impose an undue hardship on the operation of a recipient government's program, factors to be considered include:

(i) The overall size of the recipient government's operations with respect to number of employees, number and type of facilities, and size of budget;

(ii) The composition and structure of the specific program or activity and the structure of the work force required; and

(iii) The nature and cost of the accommodation needed.

(4) A recipient government may not deny any employment opportunity to a qualified handicapped employee or applicant if the basis for the denial is the need to make reasonable accommodation to the physical or mental limitations of the employee or applicant.

(i) *Employment criteria and policies.* (1) A recipient government may not use any employment test, selection criterion or policy, that excludes or tends to exclude from consideration for employment a handicapped individual or any class of handicapped individuals unless:

(i) The test, selection criterion or policy as used by the recipient, is shown to be directly related to the essential functions of the position in question, and

(ii) Alternative tests, criteria or policies that do not exclude or tend to exclude as many handicapped individuals are shown to be not available.

(2) A recipient government shall select and administer tests concerning employment so as to ensure that, when administered to an applicant or employee who has a handicap that impairs sensory, manual, or speaking skills, the test results accurately reflect the applicant's or employee's job skills, aptitude, or other factor the test purports to measure, rather than reflecting the applicant's or employee's impaired sensory, manual, or speaking skills (except where those skills are the factors that the test is intended to measure).

(3) If a recipient government has established a test, selection criterion or policy that explicitly or implicitly excludes or tends to exclude a class of handicapped individuals from a particular job, and cannot establish that the class as a whole is unqualified to perform the job, the recipient government shall individually evaluate each such individual who applies for the job to determine whether he or she can perform the essential functions of the job in question despite the handicap. As part of the determination, the recipient government shall also decide whether such applicant can be made qualified to perform the essential functions of the job in question through reasonable accommodation without undue hardship, as provided in § 51.55(i) of the part.

(j) *Preemployment inquiries.* (1) Except as provided in paragraphs (j) (2) and (3) of this section, a recipient government may not conduct a preemployment medical examination or make preemployment inquiry of an applicant as to whether the applicant is a handicapped individual or as to the nature of the severity of a handicap. A recipient government may, however, make preemployment inquiry into an applicant's ability to perform the essential functions of the job.

(2) When a recipient government is taking remedial action to correct the effects of past discrimination, when a recipient government is taking voluntary action to overcome the effects of conditions that resulted in limited participation in a program or activity, or when a recipient government is taking affirmative action, the recipient government may invite applicants for employment to indicate whether and to what extent they are handicapped, provided that:

(i) The recipient government states clearly on any written questionnaire used for this purpose or makes clear orally, if no written questionnaire is used, that the information requested is intended for use solely in connection with its remedial action obligations or its voluntary or affirmative action efforts; and

(ii) The recipient government states clearly that the information is being requested on a voluntary basis, that it will be kept confidential as provided in paragraph (j)(4) of this section, that refusal to provide it will not subject the applicant or employee to any adverse treatment, and that it will be used only in accordance with this section.

(3) Nothing in this section shall prohibit a recipient government from conditioning an offer of employment on the results of a medical examination conducted prior to the employee's entrance on duty, provided that: (i) all entering employees are subjected to such an examination regardless of handicap, and (ii) the results of such an examination are used only in accordance with the requirements of this section.

(4) Information obtained in accordance with this section as to the medical condition or history of the applicant shall be collected and maintained on separate forms and shall be accorded confidentiality as used for medical records, except that:

(i) Supervisors and managers may be informed regarding restrictions on the work or duties of handicapped individuals and regarding necessary accommodations;

(ii) First aid and safety personnel may be informed, where appropriate, if the condition might require emergency treatment; and

(iii) Government officials investigating compliance with the Act shall be provided relevant information upon request.

(k) *Program accessibility.* (1) *Discrimination prohibited.* No qualified handicapped individual shall, because a recipient government's facilities are inaccessible to or unusable by handicapped persons, be denied the benefits of, be excluded from participation in, or otherwise be subjected to discrimination under any program or activity of a recipient government, which government receives entitlement funds.

(2) *Existing facilities.* (i) *Program accessibility.* A recipient government shall operate each program or activity so that the program or activity, when viewed in its entirety, is readily accessible to and usable by handicapped individuals. Where structural changes are necessary to make programs or activities in existing facilities accessible, such changes shall be made as soon as practicable, but in no event later than three years after the effective date of this regulation.

(ii) *Methods.* A recipient government may comply with the requirements of paragraph (j)(1) of this section through such means as redesign of equipment, reassignemnt of classes or other services to accessible buildings, assignment of aides to beneficiaries, home visits, delivery of health, welfare, or other social services at alternate accessible sites, alteration of existing facilities and construction of new facilities in conformance with the requirements of paragraph (j)(7) of this section, or any other methods that result in making its programs or activities accessible to handicapped individuals. A recipient government is not required to make structural changes in existing facilities where other methods are effective in achieving compliance with paragraph (j)(1) of this section. In choosing among available methods for meeting the requirements of paragraph (j)(1) of this sectin, a recipient government shall give priority to those methods that offer programs and activities to handicapped persons in the most integrated setting appropriate.

(3) *Exception for small recipient governments.* If a recipient government which employs the equivalent of fifteen or fewer employers on a full-time basis determines, after consultation with a handicapped individual seeking a health, welfare or social service, that there is no method of complying with paragraph (k)(1) of this section other than making a significant alteration in its existing facilities, that government may, as an alternative, refer the handicapped individual to other providers of those services that are

accessible at no additional cost to the handicapped individual. Examples of other providers of those services are States and larger recipient governments.

(4) *Time periods.* (i) *General.* Except as otherwise provided in paragraph (j)(4)(ii) of this section, where structural changes are not required, a recipient government shall comply with the requirements of paragraph (j)(1) of this section within sixty days of the effective date of § 51.55. Where structural changes in facilities are necessary, such changes shall be made as expeditiously as possible, but in any event within three years of the effective date of this section.

(ii) *Transportation systems.* With respect to transportation systems, a recipient government shall comply with the time periods prescribed in regulations issued by the Department of Transportation (44 F.R. 31443) where structural changes in facilities are necessary.

(5) *Transition plan.* In the event that structural changes to facilities are necessary to comply with the requirments of paragraph (j)(1) of this section, a recipient government shall develop, within one year of the effective date of this section, a transition plan setting forth the steps necessary to complete such changes. The plan shall be developed with the assistance of interested individuals, including handicapped individuals or organizations representing handicapped individuals. A copy of the transition plan shall be made available for public inspection. The plan shall, at a minimum:

(i) Identify physical obstacles in the recipient government's facilities that limit the accessibility of its program or activity to handicapped individuals;

(ii) Describe in detail the methods that will be used to made the facilities accessible;

(iii) Specify the schedule for taking the steps necessary to achieve full program accessibility and, if the time period for the transition is longer than one year, identify steps that will be taken during each year of the transition period; and

(iv) Indicate the person responsible for implementation of the plan.

(6) *Notice.* The recipient government shall adopt and implement procedures to require that interested individuals, including individuals with impaired vision or hearing, can obtain information as to the existence and location of particular services, activities, and facilities that are accessible to and useable by handicapped individuals.

(7) *New construction.* Facilities financed with entitlement funds, the construction of which commenced on or after January 1, 1977, shall be designed and constructed so as to be readily accessible to and useable by handicapped individuals.

(8) *Alterations.* Alterations to existing facilities, which alterations are funded with entitlement funds and commenced on or after January 1, 1977, shall, to the maximum extent feasible, be designed and constructed to be readily accessible to and useable by handicapped individuals.

(9) *Leased facilities.* Facilities newly leased by a recipient government after the effective date of this section, shall be classified as new facilities. Those facilities are subject to the same accessibility requirements as facilities constructed by recipient governments and are required to be made accessible in accordance with the provisions of this section.

(10) *American National Standards Institute Accessibility Standards.* Design, construction, or alteration of facilities in conformance with the "American National Standard Specifications for Making Buildings and Facilities Accessible to, and Usable by, the Physically Handicapped," published by the American National Standards Institute, Inc. (ANSI A 117.1–1961 (R1971),* which is incorporated by reference in this subpart, shall constitute compliance with paragraphs (j)(1) and (2) of this section. A recipient government may use other standards or methods, if the government establishes that equivalent or better access to the facility or part of the facility is thereby provided.

(11) *Exception for construction projects commenced prior to January 1, 1977.* The provisions of this subsection do not apply to buildings or construction projects, including those funded with revenue sharing funds and commenced or completed prior to January 1, 1977, unless it is determined that programs or activities funded in whole or in part with revenue sharing funds are conducted within or make use of such facilities, in which case, those programs and activities must be readily accessible to and usable by handicapped individuals as described in paragraphs (j)(2) (i) and (ii) of this section.

(12) *"Commencement of construction" defined.* A construction project shall be deemed to have commenced when the recipient government has obligated itself by contract for the physical construction of the project or any substantial portion of the project.

*Copies obtainable from American National Standard Institute, Inc., 1430 Broadway, New York, N.Y. 10018.

§ 51.56 Discrimination on the basis of age.

(a) *Purpose.* This regulation sets forth the prohibition against discrimination on the basis of age in programs or activities of recipient governments as required by the Age Discrimination Act of 1975. Recipient governments may, however, continue to use certain age distinctions and factors other than age which meet the requirements set forth in this section.

(b) *Definitions.* (1) "Age Discrimination Act" means the Age Discrimination Act of 1975, as amended, (42 U.S.C. 6101, Title III of Pub. L. 94–135).

(2) "Action" means any act, activity, policy rule, standard or method of administration.

(3) "Age" means how old a person is or the number of elapsed years from the date of a person's birth.

(4) "Age distinction" means any action using age or an age-related term.

(5) "Age-related term" means a word or words which necessarily implies a particular age or range of ages (for example, "children," "adult," "older persons," but not "student").

(6) "Claim" means a written statement, alleging discrimination on the basis of age by a recipient government, that is referred to mediation.

(7) "FMCS" means the Federal Mediation and Conciliation Service.

(8) "Mediation" means the process by which an impartial mediator through the FMCS attempts to resolve a claim of discrimination on the basis of age, on which a complaint is based.

(c) *Discrimination prohibited.* (1) *General rule.* Those general prohibitions described in § 51.52 of this subpart also apply to discrimination on the basis of age, except that § 51.52(b)(3) containing general prohibitions against employment discrimination shall not apply.

(2) *Specific rules.* A recipient government may not, in any program or activity, use age distinctions or take any other actions, which have the effect of causing age discrimination prohibited under section 51.52 (other than § 51.52(b)(3)).

(3) *Employment discrimination not covered.* The prohibitions contained in this section shall not apply to the employment practices of recipient governments or their secondary recipients.

(d) *Exceptions to the rules against age discrimination.* (1) *Definitions.* For purposes of this subsection, the terms "normal operation" and "statutory objective" shall have the following meaning:

(i) "Normal operation" means the operation of a program or activity

without significant changes that would impair its ability to meet its objectives.

(ii) "Statutory objective" means any purpose of a program or activity expressly stated in any Federal statute, State statute, or local statute or ordinance adopted by an elected general purpose legislative body.

(2) *Normal operation or statutory objective of any program or activity.* A recipient government is permitted to take action, otherwise prohibited by paragraphs (c) (1) and (2) of this section, if the action reasonably takes into account age as a factor necessary to the normal operation or the achievement of any statutory objective of a program or activity, thereby, complying with the following four-part test:

(i) Age is used as a measure or approximation of one or more non-age characteristic; and

(ii) The other non-age characteristic(s) are measured or approximated in order for the normal operation of the program or activity to continue, or to achieve any statutory objective of the program or activity; and

(iii) The other non-age characteristic(s) can be reasonably measured or approximated by the use of age; and

(iv) The other non-age characteristic(s) are impractical to measure directly on an individual basis.

(3) *Reasonable factors other than age.* A recipient government may take an action otherwise prohibited by sections (c) (1) and (2) of this section, which is based on a factor other than age, even though that action may have a disproportionate effect on persons of different ages, provided that the other factor bears a direct and substantial relationship to the normal operation of the program or activity or to the achievement of a statutory objective.

(4) *Affirmative action.* If a recipient government or a secondary recipient operates a program or activity which serves the elderly or children in addition to persons of other ages, and provides special benefits to the elderly or to children, the provision of these benefits shall be presumed to be voluntary affirmative action, permissible under this section, provided that it does not have the effect of excluding otherwise eligible persons from participation in the program.

(5) *Age distinction contained in Federal, State, or local statute or ordinance.* The provisions of this section shall not apply to an age distinction contained in that part of a Federal, State or local statute or ordinance adopted by an elected general purpose legislative body which:

(i) Provides any benefits or assistance to persons based on age; or

(ii) Establishes criteria for participation in age-related terms; or

(iii) Describes intended beneficiaries or target groups in age-related terms.

(e) *Burden of proof.* The burden of proving that an age distinction or other action falls within the exceptions outlined in §§ 51.56(d) (2), (3) and (4) is on the recipient government.

(f) *Self-evaluation.* (1) A recipient government employing the equivalent of 15 or more full-time employees shall complete a one-time written self-evaluation of its compliance under the Act within 18 months of the effective date of this section.

(2) In its self-evaluation, the recipient government shall identify all age distinctions it uses, and justify age distinctions it imposes on programs or activities.

(3) A recipient government shall take corrective action whenever a self-evaluation indicates noncompliance with these regulations.

(4) Each recipient government shall make the self-evaluation available on request to the Director and to the public for a period of three years following its completion.

(g) *Enforcement generally.* Except as otherwise provided in this section, the enforcement provisions contained in this subpart shall be used to effectuate compliance with the provisions of this section.

(h) *Mediation alternative.* (1) Any individual who believes that anyone has been subjected to discrimination on the basis of age may file an administrative complaint with the Director as provided in § 51.61(a) of this subpart. However, such individual may, as an alternative, elect to have the claim(s) of discrimination on which the complaint is based referred by the Director for mediation by the Federal Mediation and Conciliation Service (FMCS).

(2) Within 5 days of receipt of a claim of age discrimination, the Director shall notify the claimant of the alternative of mediation and request the claimant to notify the ORS whether mediation of the claim of age discrimination is elected.

(3) If mediation is elected, the claimant shall personally or by representative notify the Director of the ORS in writing of such election. The notice shall set forth the facts upon which the claim of age discrimination by a recipient government is based. The Director shall refer the claim to FMCS within 5 days of receipt of the notification of the election of mediation, provided that she has determined that the claim is within the jurisdiction of this section and contains all information necessary for referral to FMCS.

(4) The Director shall advise the chief executive officer of the recipient government of any referral to the FMCS. Both the individual filing the claim and the recipient government against whom discrimination is alleged shall participate in the mediation process to the extent necessary to reach an agreement or make an informed judgment that an agreement is not possible. There must be at least one meeting with the mediator before the Director will accept a judgment that an agreement is not possible. However, the recipient government and the claimant need not meet with the mediator at the same time.

(5) If the claimant and the recipient government reach an agreement, the mediator shall prepare a written statement of the agreement for the signature of the claimant and the chief executive officer of the recipient government. The mediator shall send a signed copy of the agreement to the Director. The Director will take no further action on the claim, unless she is notified that the agreement has been breached, in which case the claim will be treated as a complaint pursuant to section 51.61 of this subpart.

(6) The mediation process shall be limited to a maximum of 60 days after the claimant notifies the Director of the election of the mediation process. Mediation ends if:

(i) 60 days elapse from the time the Director receives notice from the claimant;

(ii) Prior to the end of that 60-day period, an agreement is reached; or

(iii) Prior to the end of the 60-day period, the mediator determines that an agreement cannot be reached.

(7) The mediator shall return unresolved claims to the Director, who shall upon receipt, consider such unresolved claims to be administrative complaints to be processed in accordance with the procedures set forth in § 51.61(a) of this subpart.

(8) The mediator shall protect the confidentiality of all information obtained in the course of the mediation process. No mediator shall testify in any adjudicative proceeding, produce any document, or otherwise disclose any information obtained in the course of the mediation process without prior approval of the head of the FMCS.

(9) Age discrimination claims which also allege other bases of discrimination, such as sex or race, will, at the election of the complainant, be mediated. All bases or allegations of discrimination will be submitted to mediation. If the mediation process fails,

the entire claim will be processed as a complaint under § 51.61 of this subpart.

§ 51.57 Discrimination on the basis of national origin.

The EEOC has adopted Guidelines on discrimination on the basis of national origin (29 CFR part 1606). These Guidelines provide practical assistance to enable recipient governments to bring themselves into compliance with Federal law. Recipient governments shall comply with the provisions of these Guidelines, which are adopted by the ORS and are attached as appendix D to this subpart.

§ 51.58 Discrimination on the basis of religion.

(a) *In general.* Any prohibition against discrimination on the basis of religion, or any exclusion or exemption from such discrimination, as provided in the Civil Rights Act of 1964 or title VIII of the Act of April 1968 (hereafter referred to as the Civil Rights Act of 1968), shall apply to any program or activity of a recipient government which receives entitlement funds under the Act.

(b) *EEOC Guidelines.* The EEOC has adopted Guidelines on discrimination on the basis of religion (29 CFR part 1605). These Guidelines provide practical assistance to enable recipient governments to bring themselves into compliance with Federal law. Recipient governments shall comply with the provisions of these Guidelines, which are adopted by the ORS and are attached as appendix E to this subpart.

§ 51.59 Assurances required.

(a) *General.* In order to qualify for any payment of entitlement funds for any entitlement period, each Governor of a State or each chief executive officer of a unit of local government shall, prior to the beginning of each entitlement period, execute to the satisfaction of the Director an assurance that all programs and activities of a recipient government will be conducted in compliance with the requirements of this subpart. The chief executive officer is also required to assure that in the event a Federal or State court or Federal administrative law judge makes a holding as defined in § 51.51(j) of this subpart against the recipient government, such recipient government will forward a copy of the holding to the Director within 10 days of receipts by the recipient governments. Assurances required under this paragraph shall be in such form and detail as prescribed by the Director.

(b) *Constructive waiver of entitlement.* The failure of a recipient government to execute or fulfill the assurance requirements of this subpart, shall result in the determination that one or more of the entitlement payments to the recipient government for a particular entitlement period is constructively waived pursuant to § 51.25(b) of this part. The constructive waiver shall not be subject to the procedures for effecting compliance set forth in this subpart.

§ 51.60 Compliance information and reports.

(a) *Access to sources of information.* Each recipient government shall permit access by authorized representatives of the ORS and the Department of Justice during normal business hours to such of its facilities, books, records, accounts, personnel, and other sources on information as may be relevant to a determination of whether the recipient government is complying with this subpart. Where any information required of a recipient government is in the exclusive possession of any other agency, institution, or person, and such agency, institution, or person fails or refuses to furnish this information to the ORS or its authorized representatives, the responsibility for providing such information shall remain with the recipient government.

(b) *Compliance reports.* Each recipient government shall keep such records and submit on request of the Director timely, complete and accurate compliance reports at such times, in such form, and containing such information, as the Director may determine to be necessary or useful to ascertain whether the recipient government has complied or is complying with the requirements of the subpart. Recipient governments shall make available on request of ORS officials, racial, ethnic, male/female, and national origin data showing the extent to which minorities and females will be beneficiaries of entitlement funds. The recipient government shall also make available on request similar data concerning age distinctions and handicapped status In the case of any program under which a primary recipient government extends or will extend entitlement funds to any secondary recipient, such secondary recipient shall submit such compliance reports to the primary recipient as may be necessary or useful to enable the primary recipient to carry out its obligations as a recipient government under this subpart. Each recipient government shall identify, on request of the ORS, any State or local agency which has been legally authorized to monitor its civil rights compliance activities.

(c) *Constructive Waiver of entitlement.* The failure of a recipient government to submit reports requested to determine compliance with the provisions of this subpart, shall result on the determination that one or more of the entitlement payments to the recipient government for a particular entitlement is constructively waived pursuant to § 51.25(b) of this part. The constructive waiver shall not be subject to the procedure for effecting compliance set forth in this subpart.

§ 51.61 Compliance reviews and affirmative action.

(a) *Compliance Reviews.* (1) The Director may periodically conduct compliance reviews of selected recipient governments.

(2) In any such reviews the Director shall seek to select for review those recipient governments which appear to have the most serious equal employment opportunity problems, or the greatest disparity in the delivery of services to the majority and minority, or male and female members of the communities they serve. Selection for review shall be made on the basis of any of the following:

(i) The relative disparity between the percentage of minorities, or women, in the relevant labor market, and the percentage of minorities, or women, employed by the recipient government;

(ii) The percentage of women and minorities in the population receiving benefits from a program or activity.

(iii) The number and nature of discrimination complaints filed against a recipient with ORS or other Federal agencies;

(iv) The scope of the problems revealed by any investigation of allegations of noncompliance against a recipient government;

(v) The amount of entitlement funds provided to the recipient government.

(3) Within 90 days after selection of a recipient government for review, the Director shall inform the recipient government that it has been selected and will initiate the review. The review will ordinarily be initiated by a letter requesting data pertinent to the review and advising the recipient government of:

(i) The practice(s) to be reviewed;

(ii) The programs or activities affected by the review;

(iii) The opportunity to make, at any time prior to the receipt of the Director's findings, a documentary submission responding to the Director, explaining, validating, or otherwise addressing the practices under review; and

(iv) The schedule under which the review will be conducted and a finding made.

(4) Within 180 days after the initiation of the review, the Director shall advise

the recipient, the chief executive officer(s) of the appropriate recipient government of:

(i) The preliminary finding;

(ii) Where appropriate, a recommendation for compliance; and

(5) If, within 30 days, the Director's recommendations for compliance are not met, or voluntary compliance is not secured, the matter will be forwarded to her for a finding. If the Director makes a finding of noncompliance, she shall institute administrative proceedings pursuant to § 51.64, *et seq.* and subpart G of this part.

(b) *Affirmative action.* The EEOC has adopted Guidelines for affirmative action (29 CFR part 16—). These Guidelines clarify the kinds of voluntary actions that are appropriate under Federal law and are attached as appendix F to this subpart.

§ 51.62 Administrative complaints and investigations.

(a) *Administrative complaints.* Any person who believes anyone has been subjected to discrimination prohibited by this subpart, may personally or by a representative file with the Director of the ORS (Treasury Department, Washington, D.C. 20226) a written statement setting forth the nature of the discrimination alleged and the facts upon which the allegation is based.

(b) *Investigations.* (1) The Director shall advise the chief executive officer of the recipient government of any administrative complaint received pursuant to paragraph (a) within 30 days of the receipt of such complaint.

(2) The ORS will investigate administrative complaints described in paragraph (a). Information contained within the files of the ORS or other information which suggests discrimination prohibited by this subpart may be part of an ongoing or future investigation.

(3) Such investigations may be made with the assistance of the complainant(s) or of the recipient government.

(4) In appropriate cases the Director may defer to the Attorney General as provided for in an agreement with the Department of Justice.

(5) The scope of such investigations shall not be limited to the administrative complaint or other information but may be expanded to include any matters under the Act either discovered during the investigation or reasonably flowing from said administrative complaint or other information.

(6) The Director shall, if warranted, make a finding within (90) ninety days of receipt of an administrative complaint or State administrative agency determination.

(7) To the maximum extent feasible, the Director will make use of the agreements between agencies as provided for in § 51.69 of this subpart in order to facilitate compliance under the provisions of this section.

§ 51.63 Notification to the complainant.

Upon written request, the complainant shall be advised of the status of the investigation or other proceeding undertaken in response to the complaint. Within 10 days after the Director issues a finding, or determination or receives the decision of an administrative law judge, the Director shall notify the complainant or the complainant's counsel.

§ 51.64 Notification of noncompliance.

(a) *Notification of noncompliance after a finding by the Director.* (1) Within 10 days of completion of the investigation of a complaint, determination of a State administrative agency or other information, the Director shall, if warranted, make a finding and issue a notice of noncompliance in writing to the chief executive officer of the recipient government (and in the case of a unit of local government, also the Governor of the State in which the recipient government is located).

(2) The notice shall be to the effect that it is more likely than not that the recipient government has failed to comply with the provisions of this subpart. The notice shall further state that unless, within 30 days after receipt of this notice, a recipient government enters into a compliance agreement with the Director or presents additional evidence that demonstrates compliance or that proves by clear and convincing evidence that the program or activity complained of was not funded with entitlement funds, the Director shall issue a determination that the recipient government has failed to comply with the provisions of this subpart.

(b) *Notification of noncompliance by the Director after receipt of a holding.* (1) Within 10 days of receipt of a holding, the Director shall issue a notice of noncompliance to the chief executive officer of the recipient government in writing (and in the case of a unit of local government, to the Governor of the State in which the recipient government is located).

(2) The notice shall state that the ORS is required to adopt the holding as conclusive on the issue of discrimination and that the recipient government is in noncompliance with the provisions of this subpart. The notice shall further state that the Director may expand the issues beyond those contained in the holding. The notice shall state that unless within 30 days after receipt of this notice the recipient government enters into a compliance agreement or presents evidence which proves by clear and convincing evidence that the program or activity complained of was not funded with entitlement funds, the Director will issue a determination that the recipient government has failed to comply with the provisions of this subpart.

(3) Where the remedial order issued by the Court or administrative law judge, on which the holding is based, is stayed pending further proceedings, the stay will not affect action by the Director unless the ORS is specifically included in the stay.

§ 51.65 Determination of noncompliance.

(a) *Determination by the Director after a finding of discrimination.* (1) If a recipient government fails to demonstrate compliance, prove by clear and convincing evidence that the program or activity complained of was not funded with entitlement funding or enter into a compliance agreement within 30 days after receipt of a notice of noncompliance, the Director shall, if warranted, make a determination of non-compliance and notify the chief executive officer of the recipient government thereof (and in the case of a unit of local government, the Governor of the State in which the recipient government is located shall also be notified).

(2) Once a determination of noncompliance is received, a recipient government shall have 10 days in which to enter into a compliance agreement or request an administrative hearing. If a recipient government fails to take either action within the 10-day period, the Director shall immediately suspend the further payment of entitlement funds to such recipient government, which shall remain suspended until the recipient government enters into a compliance agreement.

(b) *Determination of the Director after notice of a holding.* (1) If a recipient government fails to prove by clear and convincing evidence that the program or activity complained of was not funded with entitlement funds, or enter into a compliance agreement within 30 days after receipt of notification of noncompliance based on a holding, the Director shall make a determination of noncompliance based upon the holding. Where the Director makes a determination of noncompliance based upon a holding she shall notify the chief executive officer of the receipient

government (and in the case of a unit of local government, the Governor of the State in which the recipient government is located shall also be notified).

(2) The notification of the determination shall adopt, the holding of the Federal or State Court or Federal administrative law judge as conclusive on the issue of discrimination and give the recipient government 10 days from receipt of the notification of the determination to enter into a compliance agreement or request an administrative hearing. The sole issue at the administrative hearing shall be whether the program or activity complained of was funded by entitlement funds. If the recipient government fails to take either action within the 10 day period, the Director shall immediately suspend the further payment of entitlement funds to such government.

(3) If the holding on which the determination is based is reversed by a appellate tribunal, or by agency review in the case of the holding of a Federal administrative law judge, the Director shall discontinue the administrative action begun as a result of the holding. Any suspension of entitlement funds resulting from the determination shall also be discontinued and those funds paid to the recipient government as quickly as possible.

51.66 Compliance agreements.

(a) *In matters where the ORS was not a party to the proceeding.* For purposes of this subpart a compliance agreement includes an agreement in writing between the Federal or State agency or official responsible for prosecuting the claim (including the Attorney General of the United States) and the chief executive officer of the recipient government against whom the noncompliance with this subpart is alleged. Such compliance agreement may take the form of a consent decree to be entered in the proceedings before a court of record or to be entered by a Federal administrative law judge having jurisdiction over the proceedings. Counsel of record representing the chief executive officer of the recipient government may initiate or negotiate the compliance agreement on behalf of the chief executive officer of the recipient government. However, in each case the Director shall, through her counsel or representative, indicate her approval or rejection of the compliance agreement. The Director may reject the compliance agreement if, in her judgment she determines that the agreement has not adequately remedied the discrimination.

(b) *In matters involving a holding.* Where the Director acts on the basis of a holding, the remedial order of the Court or Federal administrative law judge shall constitute the basis of the compliance agreement to be entered into with the Director; *provided,* however, that the lack of a remedial order does not affect the requirement that a recipient govnerment enter into a compliance agreement with the Director within the time limits set forth in section 122(b) of the Act and §§ 51.64, 51.65 and 51.66(c) of this subpart. Any agreement entered into prior to issuance of such remedial order may be appropriately modified when the order is entered.

(c) *In matters between the Director and a recipient government.* In those instances where a compliance agreement is negotiated by the Director and the chief executive officer of the recipient government, the agreement shall be one document or a series of documents containing the following:

(1) A statement of all matters that constitute the failure of the recipient government to comply with the requirements of this subpart;

(2) The terms and conditions with the recipient government has agreed to comply in order to achieve compliance with the requirements of this subpart. Such terms and conditions may include the payment of restitution to persons injured by the failure of the recipient government to comply with any provisions of this subpart; and

(3) The signatures of the Director and the chief executive officer of the recipient government concerned.

(d) *Effect of violation of compliance agreement.* (1) If the recipient government fails to comply with the obligations stipulated in this agreement, the Director may issue a new determination of noncompliance under Section 122(b)(2) of the Revenue Sharing Act.

(2) The recipient government within ten (10) days after receipt of the determination of noncompliance, shall either come into compliance with the provisions of the compliance agreement or request an administrative hearing. At such hearing, the issues shall be limited to whether or not the recipient government has acted in compliance with this agreement.

(e) *Notification to complainants of compliance agreement.* Within 15 days after the execution of a compliance agreement (or, in the case of an agreement executed under paragraph (a) of this section, upon the approval of the Director if later than 15 days) the Director shall submit a copy of such agreement to the complainant or complainants who initiated the complaint against the recipient government. The submission of a copy of the compliance agreement to counsel of record (if any) for the complainants shall meet the requirements of this paragraph.

§ 51.67 Resumption of suspended entitlement payment.

The payment of entitlement payments to a recipient government for which such payment has been suspended shall be resumed when:

(a) The recipient government enters into a compliance agreement with the Director and the Director ascertains to her satisfaction that the recipient government will comply with the provisions in this subpart.

(b) Subsequent to a hearing on the merits in a case where the Director has invoked a preliminary suspension of entitlement funds, the administrative law judge holds that the recipient government is in compliance with the provisions of this subpart; or

(c) The recipient government complies fully with the order of a court or a Federal administrative law judge if the order covers all matters raised by the Director in the original notice of noncompliance to the recipient government; or

(d) After a rehearing or similar adjudicative proceedings a court or an administrative law judge which originally held that the recipient government had failed to comply with the provisions of this subpart, subsequently holds that the recipient government did not so fail to comply; or

(e) An appellate court reverses the findings of discrimination by a lower court or administrative law judge upon the basis of which the Director suspended the payment of entitlement funds.

§ 51.68 Exhaustion of administrative remedies.

For purposes of bringing a private civil action pursuant to section 124 of the Act a complainant shall be deemed to have exhausted the administrative remedies upon the expiration of 90 days from the date the administrative complaint was mailed to the director, or with an agency with which the Director has an agreement under § 51.69 of this subpart where the Director or such agency:

(a) Issues a determination that the recipient government against whom the

complaint was filed is in compliance with the provisions of this subpart, or

(b) Fails to make a determination on such complaint.

§ 51.69 Agreements between agencies.

(a) *Purpose of cooperative agreements.* The Director shall endeavor to enter into cooperative agreements with officials of other departments and agencies of the Federal government, or officials of State agencies (which have concurrent jurisdiction) to effectuate the purposes of this subpart, including the achievement of effective coordination within the executive branch in the implementation of Title VI and Title VII of the Civil Rights Act of 1964 (42 U.S.C. 2000d, 2000e), the Civil Rights Act of 1968, the Rehabilitation Act of 1973, and the Age Discrimination Act of 1975.

(b) *Content of cooperative agreements.* The agreements between the Director and other agencies or officials shall describe the cooperative efforts to be undertaken, which may include, but need not be limited to:

(1) Sharing of resources during investigations and compliance reviews (either by having joint investigations or having one agency do an investigation for both);

(2) Cooperation during compliance activities including the issuance of findings or determinations, (including the adopting of other agency's findings or determinations where practical);

(3) Cooperation during administrative hearings including joint participation and sharing of resources.

(4) Deferral of agency action where one agency has begun compliance activities on the same complaint or set of circumstances and provision for resumption of action where the agency deferred to does not act in a timely manner;

(5) Sharing of information, including data, records and investigative and other files, computer printouts, lists and status reports on complaints received;

(6) Identification of liaison personnel and the establishment of periodic meetings to discuss common substantive and procedural problems;

(7) Protecting the confidentiality of information shared;

(8) Providing for notification of formal administrative actions instituted against jointly covered recipients and of the results of such actions, particularly those that may be classified as holdings;

(9) The establishment of lead agencies (in those areas in which lead agencies have not already been designated by statute or executive order) so that the designated lead agency will provide policy guidance in the area where two of more agencies share concurrent jurisdiction.

§ 51.70 Jurisdiction over property.

(a) *In general.* The Director shall have jurisdiction over any recipient government for purposes of this subpart for as long as that recipient government retains ownership or possession of any real or personal property or any interest therein, which was purchased in whole or in part with entitlement funds. Further, if such property is transferred to a secondary recipient or other party, the Director will retain jurisdiction over the recipient government for purposes of this subpart for as long as the property is used to provide benefits similar to those which were provided by the property before the transfer.

(b) *Definitions.* For the purposes of this section:

(1) Real property includes land, structures upon land and fixtures attached to land, and buildings or structures which cannot be removed without damage to the fixtures, buildings or structures.

(2) Personal property includes, at the least, non-expandable tangible property having a useful life of more than one year and an acquisition cost of $1,000 or more per unit of property.

(3) The transfer of property means the passage of the property to a secondary recipient, or to any other person firm or agency.

(c) *Use of property to provide similar benefits.* For the purposes of this section the clause in paragraph (a) of this section "so long as the property is used to provide benefits similar to those provided by the property before the transfer" means the primary use or function of the property and not the specific or particular use of the property in the program or activity for which originally acquired.

(d) *Record keeping requirements.* Recipient governments shall maintain a separate record of real property and of tangible personal property having a value in excess of $1,000. Such records shall set forth the date of purchase, date of disposal or transfer and the transferee of the property. Upon outright sale, discard, or trade of such property the provisions of this section shall no longer be applicable.

Appendix A

(From the Federal Register of Friday, August 25, 1978.)

Title 29—Labor

CHAPTER XIV—EQUAL EMPLOYMENT OPPORTUNITY COMMISSION

PART 1607—UNIFORM GUIDELINES ON EMPLOYEE SELECTION PROCEDURES (1978)

Title 5—Administrative Personnel

CHAPTER I—CIVIL SERVICE COMMISSION

PART 300—EMPLOYMENT (GENERAL)

Title 28—Judicial Administration

CHAPTER I—DEPARTMENT OF JUSTICE

PART 50—STATEMENTS OF POLICY

Title 41—Public Contracts and Property Management

CHAPTER 60—OFFICE OF FEDERAL CONTRACT COMPLIANCE PROGRAMS, DEPARTMENT OF LABOR

PART 60-3—UNIFORM GUIDELINES ON EMPLOYEE SELECTION PROCEDURES (1978)

Adoption of Employee Selection Procedures

AGENCIES: Equal Employment Opportunity Commission, Civil Service Commission, Department of Justice and Department of Labor.

ACTION: Adoption of uniform guidelines on employee selection procedures as final rules by four agencies.

SUMMARY: This document sets forth the uniform guidelines on employee selection procedures adopted by the Equal Employment Opportunity Commission, Civil Service Commission, Department of Justice, and the Department of Labor. At present two different sets of guidelines exist. The guidelines are intended to establish a uniform Federal position in the area of prohibiting discrimination in employment practices on grounds of race, color, religion, sex, or national origin. Cross reference documents are published at 5 CFR 300.103(c) (Civil Service Commission), 28 CFR 50.14 (Department of Justice), 29 CFR Part 1607 (Equal Employment Opportunity Commission), and 41 CFR Part 60-3 (Department of Labor) elsewhere in this issue.

EFFECTIVE DATE: September 25, 1978.

FOR FURTHER INFORMATION CONTACT:

Doris Wooten, Associate Director, Donald J. Schwartz, Staff Psychologist, Office of Federal Contract Compliance Programs, Room C-3324, Department of Labor, 200 Constitution Avenue NW., Washington, D.C. 20210, 202-523-9426.

Peter C. Robertson, Director, Office of Policy Implementation, Equal Employment Opportunity Commission, 2401 E Street NW., Washington, D.C. 20506, 202-634-7060.

David L. Rose, Chief, Employment Section, Civil Rights Division, Department of Justice, 10th Street and Pennsylvania Avenue NW., Washington, D.C. 20530, 202-739-3831.

A. Diane Graham, Director, Federal Equal Employment Opportunity, Civil Service Commission, 1900 E Street NW., Washington, D.C. 20415, 202-632-4420.
H. Patrick Swygert, General Counsel, Civil Service Commission, 1900 E Street NW., Washington, D.C. 20415, 202-632-4632.

SUPPLEMENTARY INFORMATION:

An Overview of the 1978 Uniform Guidelines on Employee Selection Procedures

I. Background

One problem that confronted the Congress which adopted the Civil Rights Act of 1964 involved the effect of written preemployment tests on equal employment opportunity. The use of these test scores frequently denied employment to minorities in many cases without evidence that the tests were related to success on the job. Yet employers wished to continue to use such tests as practical tools to assist in the selection of qualified employees. Congress sought to strike a balance which would proscribe discrimination, but otherwise permit the use of tests in the selection of employees. Thus, in title VII, Congress authorized the use of "any professionally developed ability test provided that such test, its administration or action upon the results is not designed, intended or used to discriminate * * *".[1]

At first, some employers contended that, under this section, they could use any test which had been developed by a professional so long as they did not intend to exclude minorities, even if such exclusion was the consequence of the use of the test. In 1966, the Equal Employment Opportunity Commission (EEOC) adopted guidelines to advise employers and other users what the law and good industrial psychology practice required.[2] The Department of Labor adopted the same approach in 1968 with respect to tests used by Federal contractors under Executive Order 11246 in a more detailed regulation. The Government's view was that the employer's intent was irrelevant. If tests or other practices had an adverse impact on protected groups, they were unlawful unless they could be justified. To justify a test which screened out a higher proportion of minorities, the employer would have to show that it fairly measured or predicted performance on the job. Otherwise, it would not be considered to be "professionally developed."

In succeeding years, the EEOC and the Department of Labor provided more extensive guidance which elaborated upon these principles and expanded the guidelines to emphasize all selection procedures. In 1971 in *Griggs* v. *Duke Power Co.*,[3] the Supreme Court announced the principle that employer practices which had an adverse impact on minorities and were not justified by business necessity constituted illegal discrimination under title VII. Congress confirmed this interpretation in the 1972 amendments to title VII. The elaboration of these principles by courts and agencies continued into the mid-1970's,[4] but differences between the EEOC and the other agencies (Justice, Labor, and Civil Service Commission) produced two different sets of guidelines by the end of 1976.

With the advent of the Carter administration in 1977, efforts were intensified to produce a unified government position. The following document represents the result of that effort. This introduction is intended to assist those not familiar with these matters to understand the basic approach of the uniform guidelines. While the guidelines are complex and technical, they are based upon the principles which have been consistently upheld by the courts, the Congress, and the agencies.

The following discussion will cite the sections of the Guidelines which embody these principles.

II. Adverse Impact

The fundamental principle underlying the guidelines is that employer policies or practices which have an adverse impact on employment opportunities of any race, sex, or ethnic group are illegal under title VII and the Executive order unless justified by business necessity.[5] A selection procedure which has no adverse impact generally does not violate title VII or the Executive order.[6] This means that an employer may usually avoid the application of the guidelines by use of procedures which have no adverse impact.[7] If adverse impact exists, it must be justified on grounds of business necessity. Normally, this means by validation which demonstrates the relation between the selection procedure and performance on the job.

The guidelines adopt a "rule of thumb" as a practical means of determining adverse impact for use in enforcement proceedings. This rule is known as the "4/5ths" or "80 percent" rule.[8] It is not a legal definition of discrimination, rather it is a practical device to keep the attention of enforcement agencies on serious discrepancies in hire or promotion rates or other employment decisions. To determine whether a selection procedure violates the "4/5ths rule", an employer compares its hiring rates for different groups.[9] But this rule of thumb cannot be applied automatically. An employer who has conducted an extensive recruiting campaign may have a larger than normal pool of applicants, and the "4/5ths rule" might unfairly expose it to enforcement proceedings.[10] On the other hand, an employer's reputation may have discouraged or "chilled" applicants of particular groups from applying because they believed application would be futile. The application of the "4/5ths" rule in that situation would allow an employer to evade scrutiny because of its own discrimination.[11]

III. Is Adverse Impact To Be Measured by the Overall Process?

In recent years some employers have eliminated the overall adverse impact of a selection procedure and employed sufficient numbers of minorities or women to meet this "4/5th's rule of thumb". However, they might continue use of a component which does have an adverse impact. For example, an employer might insist on a minimum passing score on a written test which is not job related and which has an adverse impact on minorities.[12] However, the employer might compensate for this adverse impact by hiring a sufficient proportion of minorities who do meet its standards, so that its overall hiring is on a par with or higher than the applicant flow. Employers have argued that as long as their "bottom line" shows no overall adverse impact, there is no violation at all, regardless of the operation of a particular component of the process.

Employee representatives have argued that rights under equal employment opportunity laws are individual, and the fact that an employer has hired some minorities does not justify discrimination against other minorities. Therefore, they argue that adverse impact is to be determined by examination of each component of the selection procedure, regardless of the "bottom line." This question has not been answered definitively by the courts. There are decisions pointing in both directions.

These guidelines do not address the underlying question of law. They discuss only the exercise of prosecutorial discretion by the Government agencies themselves.[13] The agencies have decided that, generally, their resources to combat discrimination should be used against those respondents whose practices have restricted or excluded the opportunities of minorities and women. If an employer is appropriately including all groups in the workforce, it is not sensible to spend Government time and effort on such a case, when there are so many employers whose practices do have adverse effects which should be challenged. For this reason, the guidelines provide that, in considering whether to take enforcement action, the Government will take into account the general posture of the employer concerning equal employment opportunity, including its affirmative action plan and results achieved under the plan.[14] There are some circumstances where the government may intervene even though the "bottom line" has been satisfied. They include the case where a component of a selection procedure restricts promotional opportunities of minorities or women who were discriminatorily assigned to jobs, and where a component, such as a height requirement, has been declared unlawful in other situations.[15]

What of the individual who is denied the job because of a particular component in a procedure which otherwise meets the "bottom line" standard? The individual retains the right to proceed through the appropriate agencies, and into Federal court.[16]

[1] Section 703(h), 42 U.S.C. 2000e(2)(h).

[2] See 35 U.S.L.W. 2137 (1966).

[3] 401 U.S. 424 (1971).

[4] See, *e.g.*, *Albermarle Paper Co.* v. *Moody*, 422 U.S. 405 (1975).

[5] *Griggs*, note 3, supra; uniform guidelines on employee selection procedures (1978), section 3A, (hereinafter cited by section number only).

[6] *Furnco* v. *Waters*, 98 S.Ct. 2943 (1978).

[7] Section 6.

[8] Section 4D.

[9] Section 16R (definition of selection rate).

[10] Section 4D (special recruiting programs).

[11] *Ibid* (user's actions have discouraged applicants).

[12] See, *e.g.*, *Griggs* v. *Duke Power Co.*, 401 U.S. 424 (1971).

[13] Section 4C.

[14] Section 4E.

[15] Section 4C.

[16] The processing of individual cases is excluded from the operation of the bottom line concept by the definition of "enforcement action," section 16I. Under section 4C, where adverse impact has existed, the employer must keep records of the effect of each component for 2 years after the adverse effect has dissipated.

IV. Where Adverse Impact Exists: The Basic Options

Once an employer has established that there is adverse impact, what steps are required by the guidelines? As previously noted, the employer can modify or eliminate the procedure which produces the adverse impact, thus taking the selection procedure from the coverage of these guidelines. If the employer does not do that, then it must justify the use of the procedure on grounds of "business necessity."[17] This normally means that it must show a clear relation between performance on the selection procedure and performance on the job. In the language of industrial psychology, the employer must validate the selection procedure. Thus the bulk of the guidelines consist of the Government's interpretation of standards for validation.

V. Validation: Consideration of Alternatives

The concept of validation as used in personnel psychology involves the establishment of the relationship between a test instrument or other selection procedure and performance on the job. Federal equal employment opportunity law has added a requirement to the process of validation. In conducting a validation study, the employer should consider available alternatives which will achieve its legitimate business purpose with lesser adverse impact.[18] The employer cannot concentrate solely on establishing the validity of the instrument or procedure which it has been using in the past.

This same principle of using the alternative with lesser adverse impact is applicable to the manner in which an employer uses a valid selection procedure.[19] The guidelines assume that there are at least three ways in which an employer can use scores on a selection procedure: (1) To screen out of consideration those who are not likely to be able to perform the job successfully; (2) to group applicants in accordance with the likelihood of their successful performance on the job, and (3) to rank applicants, selecting those with the highest scores for employment.[20]

The setting of a "cutoff score" to determine who will be screened out may have an adverse impact. If so, an employer is required to justify the initial cutoff score by reference to its need for a trustworthy and efficient work force.[21] Similarly, use of results for grouping or for rank ordering is likely to have a greater adverse effect than use of scores solely to screen out unqualified candidates. If the employer chooses to use a rank order method, the evidence of validity must be sufficient to justify that method of use.[22]

VI. Testing for Higher Level Jobs

Normally, employers test for the job for which people are hired. However, there are situations where the first job is temporary or transient, and the workers who remain are promoted to work which involves more complex activities. The guidelines restrict testing for higher level jobs to users who promote a majority of the employees who remain with them to the higher level job within a reasonable period of time.[23]

VII. How Is Validation To Be Conducted

Validation has become highly technical and complex, and yet is constantly changing as a set of concepts in industrial psychology. What follows here is a simple introduction to a highly complex field. There are three concepts which can be used to validate a selection procedure. These concepts reflect different approaches to investigating the job relatedness of selection procedures and may be interrelated in practice. They are (1) criterion-related validity,[24] (2) content validity,[25] and (3) construct validity.[26] In criterion-related validity, a selection procedure is justified by a statistical relationship between scores on the test or other selection procedure and measures of job performance. In content validity, a selection procedure is justified by showing that it representatively samples significant parts of the job, such as a typing test for a typist. Construct validity involves identifying the psychological trait (the construct) which underlies successful performance on the job and then devising a selection procedure to measure the presence and degree of the construct. An example would be a test of "leadership ability."

The guidelines contain technical standards and documentation requirements for the application of each of the three approaches.[27] One of the problems which the guidelines attempt to meet is the "borderline" between "content validity" and "construct validity." The extreme cases are easy to understand. A secretary, for example, may have to type. Many jobs require the separation of important matters which must be handled immediately from those which can be handled routinely. For the typing function, a typing test is appropriate. It is justifiable on the basis of content validity because it is a sample of an important or critical part of the job. The second function can be viewed as involving a capability to exercise selective judgment in light of the surrounding circumstances, a mental process which is difficult to sample.

In addressing this situation, the guidelines attempt to make it practical to validate the typing test by a content strategy,[28] but do not allow the validation of a test measuring a construct such as "judgment" by a content validity strategy.

The bulk of the guidelines deals with questions such as those discussed in the above paragraphs. Not all such questions can be answered simply, nor can all problems be addressed in the single document. Once the guidelines are issued, they will have to be interpreted in light of changing factual, legal, and professional circumstances.

VIII. Simplification of Reporting and Recordkeeping Requirements

The reporting and recordkeeping provisions which appeared in the December 30 draft which was published for comment have been carefully reviewed in light of comments received and President Carter's direction to limit paperwork burdens on those regulated by Government to the minimum necessary for effective regulation. As a result of this review, two major changes have been made in the documentation requirements of the guidelines:

(1) A new section 15A(1) provides a simplified recordkeeping option for employers with fewer than 100 employees;

(2) Determinations of the adverse impact of selection procedures need not be made for groups which constitute less than 2 percent of the relevant labor force.

Also, the draft has been changed to make clear that users can assess adverse impact on an annual basis rather than on a continuing basis.

Analysis of comments. The uniform guidelines published today are based upon the proposition that the Federal Government should speak to the public and to those whom it regulates with one voice on this important subject; and that the Federal Government ought to impose upon itself obligations for equal employment opportunity which are at least as demanding as those it seeks to impose on others. These guidelines state a uniform Federal position on this subject, and are intended to protect the rights created by title VII of the Civil Rights Act of 1964, as amended, Executive Order 11246, as amended, and other provisions of Federal law. The uniform guidelines are also intended to represent "professionally acceptable methods" of the psychological profession for demonstrating whether a selection procedure validly predicts or measures performance for a particular job. *Albemarle Paper Co.* v. *Moody*, 442 U.S. 405, 425. They are also intended to be consistent with the decisions of the Supreme Court and authoritative decisions of other appellate courts.

Although the development of these guidelines preceded the issuance by President Jimmy Carter of Executive Order 12044 designed to improve the regulatory process, the spirit of his Executive order was followed in their development. Initial agreement among the Federal agencies was reached early in the fall of 1977, and the months from October 1977 until today have been spent in extensive consultation with civil rights groups whose clientele are protected by these guidelines; employers, labor unions, and State and local governments whose employment practices are affected by these guidelines; State and

[17] A few practices may be used without validation even if they have adverse impact. See, *e.g.*, *McDonnell Douglas* v. *Green*, 411 U.S. 792 (1973) and section 6B.

[18] *Albermarle Paper Co.* v. *Moody*, 422 U.S. 405 (1975); *Robinson* v. *Lorillard Corp.*, 444 F. 2d 791 (4th Cir. 1971).

[19] Sections 3B; 5G.

[20] *Ibid.*

[21] See sections 3B; 5H. See also sections 14B(6) (criterion-related validity); 14C(9) (content validity); 14D(1) (construct validity).

[22] Sections 5G, 14B(6); 14C(9); 14D(1).

[23] Section 5I.

[24] Sections 5B, (General Standards); 14B (Technical Standards); 15B (Documentation); 16F (Definition).

[25] Sections 5B (General Standards); 14C (Technical Standards); 15C (Documentation); 16D (Definition).

[26] Sections 5B (General Standards); 14D (Technical Standards); 15D (Documentation); 16E (Definition).

[27] Technical standards are in section 14; documentation requirements are in section 15.

[28] Section 14C.

local government antidiscrimination agencies who share with the Federal Government enforcement responsibility for discriminatory practices; and appropriate members of the general public. For example, an earlier draft of these guidelines was circulated informally for comment on October 28, 1977, pursuant to OMB Circular A-85. Many comments were received from representatives of State and local governments, psychologists, private employers, and civil rights groups. Those comments were taken into account in the draft of these guidelines which was published for comment December 30, 1977, 42 FR 66542.

More than 200 organizations and individuals submitted written comments on the December 30, 1977, draft. These comments were from representatives of private industry, public employers, labor organizations, civil rights groups, the American Psychological Association and components thereof, and many individual employers, psychologists, and personnel specialists. On March 3, 1978, notice was given of a public hearing and meeting to be held on April 10, 1978, 43 FR 9131. After preliminary review of the comments, the agencies identified four issues of particular interest, and invited testimony particularly on those issues, 43 FR 11812 (March 21, 1978). In the same notice the agencies published questions and answers on four issues of concern to the commenters. The questions and answers were designed to clarify the intent of the December 30, 1977, draft, so as to provide a sharper focus for the testimony at the hearing.

At a full day of testimony on April 10, 1978, representatives of private industry, State and local governments, labor organizations, and civil rights groups, as well as psychologists, personnel specialists, and others testified at the public hearing and meeting. The written comments, testimony, and views expressed in subsequent informal consultations have been carefully considered by the four agencies. We set forth below a summary of the comments, and the major issues raised in the comments and testimony, and attempt to explain how we have resolved those issues.

The statement submitted by the American Psychological Association (A.P.A.) stated that "these guidelines represent a major step forward and with careful interpretation can provide a sound basis for concerned professional work." Most of the A.P.A. comments were directed to clarification and interpretation of the present language of the proposal. However, the A.P.A. recommended substantive change in the construct validity section and in the definition of work behavior.

Similarly, the Division of Industrial and Organizational Psychology (division 14) of the A.P.A. described the technical standards of the guidelines as "superior" in terms of congruence with professional standards to "most previous orders and guidelines but numerous troublesome aspects remain." Division 14 had substantial concerns with a number of the provisions of the general principles of the draft.

Civil rights groups generally found the uniform guidelines far superior to the FEA guidelines, and many urged their adoption, with modifications concerning ranking and documentation. Others raised concerns about the "bottom line" concept and other provisions of the guidelines.

The Ad Hoc Group on Employee Selection Procedures representing many employers in private industry supported the concept of uniform guidelines, but had a number of problems with particular provisions, some of which are described below. The American Society for Personnel Administration (ASPA) and the International Personnel Management Association, which represents State and local governments, generally took the same position as the ad hoc group. Major industrial unions found that the draft guidelines were superior to the FEA guidelines, but they perceived them to be inferior to the EEOC guidelines. They challenged particularly the bottom line concept and the construct validity section.

The building trade unions urged an exclusion of apprenticeship programs from coverage of the guidelines. The American Council on Education found them inappropriate for employment decisions concerning faculty at institutions of higher education. Other particular concerns were articulated by organizations representing the handicapped, licensing and certifying agencies, and college placement offices.

General Principles

1. *Relationship between validation and elimination of adverse impact, and affirmative action.* Federal equal employment opportunity law generally does not require evidence of validity for a selection procedure if there is no adverse impact; e.g., *Griggs* v. *Duke Power Co.*, 401 U.S. 424. Therefore, a user has the choice of complying either by providing evidence of validity (or otherwise justifying use in accord with Federal law), or by eliminating the adverse impact. These options have always been present under Federal law, 29 CFR 1607.3; 41 CFR 60-3.3(a); and the Federal Executive Agency Guidelines, 41 FR 51734 (November 23, 1976). The December 30 draft guidelines, however, clarified the nature of the two options open to users.

Psychologists expressed concern that the December 30 draft of section 6A encouraged the use of invalid procedures as long as there is no adverse impact. Employers added the concern that the section might encourage the use of illegal procedures not having an adverse impact against the groups who have historically suffered discrimination (minorities, women), even if they have an adverse impact on a different group (whites, males).

Section 6A was not so intended, and we have revised it to clarify the fact that illegal acts purporting to be affirmative action are not the goal of the agencies or of the guidelines; and that any employee selection procedure must be lawful and should be as job related as possible. The delineation of examples of alternative procedures was eliminated to avoid the implication that particular procedures are either prescribed or are necessarily appropriate. The basic thrust of section 6A, that elimination of adverse impact is an alternative to validation, is retained.

The inclusion of excerpts from the 1976 Equal Employment Opportunity Coordinating Council Policy Statement on Affirmative Action in section 13B of the December 30 draft was criticized as not belonging in a set of guidelines for the validation of selection procedures. Section 13 has been revised. The general statement of policy in support of voluntary affirmative action, and the reaffirmation of the policy statement have been retained, but this statement itself is now found in the appendix to the guidelines.

2. *The "bottom line" (section 4C).* The guidelines provide that when the overall selection process does not have an adverse impact the Government will usually not examine the individual components of that process for adverse impact or evidence of validity. The concept is based upon the view that the Federal Government should not generally concern itself with individual components of a selection process, if the overall effect of that process is nonexclusionary. Many commenters criticized the ambiguity caused by the word "generally" in the December 30 draft of section 4C which provided, "the Federal enforcement agencies * * * generally will not take enforcement action based upon adverse impact of any component" of a process that does not have an overall adverse impact. Employer groups stated the position that the "bottom line" should be a rule prohibiting enforcement action by Federal agencies with respect to all or any part of a selection process where the bottom line does not show adverse impact. Civil rights and some labor union representatives expressed the opposing concerns that the concept may be too restrictive, that it may be interpreted as a matter of law, and that it might allow certain discriminatory conditions to go unremedied.

The guidelines have been revised to clarify the intent that the bottom line concept is based upon administrative and prosecutorial discretion. The Federal agencies cannot accept the recommendation that they never inquire into or take enforcement action with respect to any component procedure unless the whole process of which it is a part has an adverse impact. The Federal enforcement agencies believe that enforcement action may be warranted in unusual circumstances, such as those involving other discriminatory practices, or particular selection procedures which have no validity and have a clear adverse impact on a national basis. Other unusual circumstances may warrant a high level agency decision to proceed with enforcement actions although the "bottom line" has been satisfied. At the same time the agencies adhere to the bottom line concept of allocating resources primarily to those users whose overall selection processes have an adverse impact. See overview, above, part III.

3. *Investigation of alternative selection procedures and alternative methods of use (section 3B).* The December 30 draft included an obligation on the user, when conducting a validity study, to investigate alternative procedures and uses, in order to determine whether there are other procedures which are substantially equally valid, but which have less adverse impact. The American Psychological Association stated:

"We would concur with the drafters of the guidelines that it is appropriate in the

determination of a selection strategy to consider carefully a variety of possible procedures and to think carefully about the question of adverse impact with respect to each of these procedures. Nevertheless, we feel it appropriate to note that a rigid enforcement of these sections, particularly for smaller employers, would impose a substantial and expensive burden on these employers."

Since a reasonable consideration of alternatives is consistent with the underlying principle of minimizing adverse impact consistent with business needs, the provision is retained.

Private employer representatives challenged earlier drafts of these guidelines as being inconsistent with the decision of the Supreme Court in *Albemarle Paper Co.* v. *Moody*, 422 U.S. 405. No such inconsistency was intended. Accordingly, the first sentence of section 3B was revised to paraphrase the opinion in the *Albemarle* decision, so as to make it clear that section 3B is in accord with the principles of the *Albemarle* decision.

Section 3B was further revised to clarify the intent of the guidelines that the obligation to investigate alternative procedures is a part of conducting a validity study, so that alternative procedures should be evaluated in light of validity studies meeting professional standards, and that section 3B does not impose an obligation to search for alternatives if the user is not required to conduct a validity study.

Just as, under section 3B of the guidelines, a user should investigate alternative selection procedures as a part of choosing and validating a procedure, so should the user investigate alternative uses of the selection device chosen to find the use most appropriate to his needs. The validity study should address the question of what method of use (screening, grouping, or rank ordering) is appropriate for a procedure based on the kind and strength of the validity evidence shown, and the degree of adverse impact of the different uses.

4. *Establishment of cutoff scores and rank ordering.* Some commenters from civil rights groups believed that the December 30 draft guidelines did not provide sufficient guidance as to when it was permissible to use a selection procedure on a ranking basis rather than on a pass-fail basis. They also objected to section 5G in terms of setting cutoff scores. Other comments noted a lack of clarity as to how the determination of a cutoff score or the use of a procedure for ranking candidates relates to adverse impact.

As we have noted, users are not required to validate procedures which do not have an adverse impact. However, if one way of using a procedure (e.g., for ranking) results in greater adverse impact than another way (e.g., pass/fail), the procedure must be validated for that use. Similarly, cutoff scores which result in adverse impact should be justified. If the use of a validated procedure for ranking results in greater adverse impact than its use as a screening device, the evidence of validity and utility must be sufficient to warrant use of the procedures as a ranking device.

A new section 5G has been added to clarify these concepts. Section 5H (formerly section 5G) addresses the choice of a cutoff score when a procedure is to be used for ranking.

5. *Scope: Requests for exemptions for certain classes of users.* Some employer groups and labor organizations (e.g., academic institutions, large public employers, apprenticeship councils) argued that they should be exempted from all or some of the provisions of these guidelines because of their special needs. The intent of Congress as expressed in Federal equal employment opportunity law is to apply the same standards to all users, public and private.

These guidelines apply the same principles and standards to all employers. On the other hand, the nature of the procedures which will actually meet those principles and standards may be different for different employers, and the guidelines recognize that fact. Accordingly, the guidelines are applicable to all employers and other users who are covered by Federal equal employment opportunity law.

Organizations of handicapped persons objected to excluding from the scope of these guidelines the enforcement of laws prohibiting discrimination on the basis of handicap, in particular the Rehabilitation Act of 1973, sections 501, 503, and 504. While this issue has not been addressed in the guidelines, nothing precludes the adoption of the principles set forth in these guidelines for other appropriate situations.

Licensing and certification boards raised the question of the applicability of the guidelines to their licensing and certification functions. The guidelines make it clear that licensing and certification are covered "to the extent" that licensing and certification may be covered by Federal equal employment opportunity law.

Voluntary certification boards, where certification is not required by law, are not users as defined in section 16 with respect to their certifying functions and therefore are not subject to these guidelines. If an employer relies upon such certification in making employment decisions, the employer is the user and must be prepared to justify, under Federal law, that reliance as it would any other selection procedure.

6. *The "Four-Fifths Rule of Thumb" (section 4D).* Some representatives of employers and some professionals suggest that the basic test for adverse impact should be a test of statistical significance, rather than the four-fifths rule. Some civil rights groups, on the other hand, still regard the four-fifths rule as permitting some unlawful discrimination.

The Federal agencies believe that neither of these positions is correct. The great majority of employers do not hire, promote, or assign enough employees for most jobs to warrant primary reliance upon statistical significance. Many decisions in day-to-day life are made on the basis of information which does not have the justification of a test of statistical significance. Courts have found adverse impact without a showing of statistical significance. *Griggs* v. *Duke Power Co.*, supra; *Vulcan Society of New York* v. *CSC of N.Y.*, 490 F. 2d 387, 393 (2d Cir. 1973); *Kirkland* v. *New York St. Dept. of Corr. Serv.*, 520 F. 2d 420, 425 (2d Cir. 1975).

Accordingly, the undersigned believe that while the four-fifths rule does not define discrimination and does not apply in all cases, it is appropriate as a rule of thumb in identifying adverse impact.

Technical Standards

7. *Criterion-related validity (section 14B).* This section of the guidelines found general support among the commenters from the psychological profession and, except for the provisions concerning test fairness (sometimes mistakenly equated with differential prediction or differential validity), generated relatively little comment.

The provisions of the guidelines concerning criterion-related validity studies call for studies of fairness of selection procedures where technically feasible.

Section 14B(8). Some psychologists and employer groups objected that the concept of test fairness or unfairness has been discredited by professionals and pointed out that the term is commonly misused. We recognize that there is serious debate on the question of test fairness; however, it is accepted professionally that fairness should be examined where feasible. The A.P.A. standards for educational and psychological tests, for example, direct users to explore the question of fairness on finding a difference in group performances (section E9, pp. 43–44). Similarly the concept of test fairness is one which is closely related to the basic thrust of Federal equal employment opportunity law; and that concept was endorsed by the Supreme Court in *Albemarle Paper Co.* v. *Moody*, 422 U.S. 405.

Accordingly, we have retained in the guidelines the obligation upon users to investigate test fairness where it is technically feasible to do so.

8. *Content validity.* The Division of Industrial and Organizational Psychology of A.P.A. correctly perceived that the provisions of the draft guidelines concerning content validity, with their emphasis on observable work behaviors or work products, were "greatly concerned with minimizing the inferential leap between test and performance." That division expressed the view that the draft guidelines neglected situations where a knowledge, skill or ability is necessary to an outcome but where the work behavior cannot be replicated in a test. They recommended that the section be revised.

We believe that the emphasis on observable work behaviors or observable work products is appropriate; and that in order to show content validity, the gap between the test and performance on the job should be a small one. We recognize, however, that content validity may be appropriate to support a test which measures a knowledge, skill, or ability which is a necessary prerequisite to the performance of the job, even though the test might not be close enough to the work behavior to be considered a work sample, and the guidelines have been revised appropriately. On the other hand, tests of mental processes which are not directly observable and which may be difficult to determine on the basis of observable work behaviors or work products should not be supported by content validity.

Thus, the Principles for the Validation and Use of Personnel Selection procedures (Division of Industrial and Organizational

Psychology, American Psychological Association, 1975, p. 10), discuss the use of content validity to support tests of "specific items of knowledge, or specific job skills," but call attention to the inappropriateness of attempting to justify tests for traits or constructs on a content validity basis.

9. *Construct validity (section 14D).* Business groups and professionals expressed concern that the construct validity requirements in the December 30 draft were confusing and technically inaccurate. As section 14D indicates, construct validity is a relatively new procedure in the field of personnel selection and there is not yet substantial guidance in the professional literature as to its use in the area of employment practices. The provisions on construct validity have been revised to meet the concerns expressed by the A.P.A. The construct validity section as revised clarifies what is required by the Federal enforcement agencies at this stage in the development of construct validity. The guidelines leave open the possibility that different evidence of construct validity may be accepted in the future, as new methodologies develop and become incorporated in professional standards and other professional literature.

10. *Documentation (section 15).* Commenters stated that the documentation section did not conform to the technical requirements of the guidelines or was otherwise inadequate. Section 15 has been clarified and two significant changes have been made to minimize the recordkeeping burden. (See overview, part VIII.)

11. *Definitions (section 16).* The definition of work behavior in the December 30, 1977 draft was criticized by the A.P.A. and others as being too vague to provide adequate guidance to those using the guidelines who must identify work behavior as a part of any validation technique. Other comments criticized the absence or inadequacies of other definitions, expecially "adverse impact." Substantial revisions of and additions to this section were therefore made.

Uniform Guidelines on Employee Selection Procedures (1978)

Note.—These guidelines are issued jointly by four agencies. Separate official adoptions follow the guidelines in this part IV as follows: Civil Service Commission, Department of Justice, Equal Employment Opportunity Commission, Department of Labor.

For official citation see section 18 of these guidelines.

Table of Contents

General Principles

1. Statement of Purpose
A. Need for Uniformity—Issuing Agencies
B. Purpose of Guidelines
C. Relation to Prior Guidelines
2. Scope
A. Application of Guidelines
B. Employment Decisions
C. Selection Procedures
D. Limitations
E. Indian Preference Not Affected
3. Discrimination Defined: Relationship Between Use of Selection Procedures and Discrimination
A. Procedure Having Adverse Impact Constitutes Discrimination Unless Justified
B. Consideration of Suitable Alternative Selection Procedures
4. Information on Impact
A. Records Concerning Impact
B. Applicable Race, Sex and Ethnic Groups For Record Keeping
C. Evaluation of Selection Rates. The "Bottom Line"
D. Adverse Impact And The "Four-Fifths Rule"
E. Consideration of User's Equal Employment Opportunity Posture
5. General Standards for Validity Studies
A. Acceptable types of Validity Studies
B. Criterion-Related, Content, and Construct Validity
C. Guidelines Are Consistent with Professional Standards
D. Need For Documentation of Validity
E. Accuracy and Standardization
F. Caution Against Selection on Basis of Knowledges, Skills or Abilities Learned in Brief Orientation Period
G. Method of Use of Selection Procedures
H. Cutoff Scores
I. Use of Selection Procedures for Higher Level Jobs
J. Interim Use of Selection Procedures
K. Review of Validity Studies for Currency
6. Use of Selection Procedures Which Have Not Been Validated
A. Use of Alternate Selection Procedures to Eliminate Adverse Impact
B. Where Validity Studies Cannot or Need Not Be Performed
(1) Where Informal or Unscored Procedures Are Used
(2) Where Formal And Scored Procedures Are Used
7. Use of Other Validity Studies
A. Validity Studies not Conducted by the User
B. Use of Criterion-Related Validity Evidence from Other Sources
(1) Validity Evidence
(2) Job Similarity
(3) Fairness Evidence
C. Validity Evidence from Multi-Unit Study
D. Other Significant Variables
8. Cooperative Studies
A. Encouragement of Cooperative Studies
B. Standards for Use of Cooperative Studies
9. No Assumption of Validity
A. Unacceptable Substitutes for Evidence of Validity
B. Encouragement of Professional Supervision
10. Employment Agencies and Employment Services
A. Where Selection Procedures Are Devised by Agency
B. Where Selection Procedures Are Devised Elsewhere
11. Disparate Treatment
12. Retesting of Applicants
13. Affirmative Action
A. Affirmative Action Obligations
B. Encouragement of Voluntary Affirmative Action Programs

Technical Standards

14. Technical Standards for Validity Studies
A. Validity Studies Should be Based on Review of Information about the Job
B. Technical Standards for Criterion-Related Validity Studies
(1) Technical Feasibility
(2) Analysis of the Job
(3) Criterion Measures
(4) Representativeness of the Sample
(5) Statistical Relationships
(6) Operational Use of Selection Procedures
(7) Over-Statement of Validity Findings
(8) Fairness
(a) Unfairness Defined
(b) Investigation of Fairness
(c) General Considerations in Fairness Investigations
(d) When Unfairness Is Shown
(e) Technical Feasibility of Fairness Studies
(f) Continued Use of Selection Procedures When Fairness Studies not Feasible
C. Technical Standards for Content Validity Studies
(1) Appropriateness of Content Validity Studies
(2) Job Analysis for Content Validity
(3) Development of Selection Procedure
(4) Standards For Demonstrating Content Validity
(5) Reliability
(6) Prior Training or Experience
(7) Training Success
(8) Operational Use
(9) Ranking Based on Content Validity Studies
D. Technical Standards For Construct Validity Studies
(1) Appropriateness of Construct Validity Studies
(2) Job Analysis For Construct Validity Studies
(3) Relationship to the Job
(4) Use of Construct Validity Study Without New Criterion-Related Evidence
(a) Standards for Use
(b) Determination of Common Work Behaviors

Documentation of Impact and Validity Evidence

15. Documentation of Impact and Validity Evidence
A. Required Information
(1) Simplified Recordkeeping for Users With Less Than 100 Employees
(2) Information on Impact
(a) Collection of Information on Impact
(b) When Adverse Impact Has Been Eliminated in The Total Selection Process
(c) When Data Insufficient to Determine Impact
(3) Documentation of Validity Evidence
(a) Type of Evidence
(b) Form of Report
(c) Completeness
B. Criterion-Related Validity Studies
(1) User(s), Location(s), and Date(s) of Study
(2) Problem and Setting
(3) Job Analysis or Review of Job Information
(4) Job Titles and Codes
(5) Criterion Measures
(6) Sample Description
(7) Description of Selection Procedure
(8) Techniques and Results
(9) Alternative Procedures Investigated
(10) Uses and Applications
(11) Source Data
(12) Contact Person
(13) Accuracy and Completeness

C. Content Validity Studies
(1) User(s), Location(s), and Date(s) of Study
(2) Problem and Setting
(3) Job Analysis—Content of the Job
(4) Selection Procedure and its Content
(5) Relationship Between Selection Procedure and the Job
(6) Alternative Procedures Investigated
(7) Uses and Applications
(8) Contact Person
(9) Accuracy and Completeness
D. Construct Validity Studies
(1) User(s), Location(s), and Date(s) of Study
(2) Problem and Setting
(3) Construct Definition
(4) Job Analysis
(5) Job Titles and Codes
(6) Selection Procedure
(7) Relationship to Job Perfromance
(8) Alternative Procedures Investigated
(9) Uses and Applications
(10) Accuracy and Completeness
(11) Source Data
(12) Contact Person
E. Evidence of Validity from Other Studies
(1) Evidence from Criterion-Related Validity Studies
(a) Job Information
(b) Relevance of Criteria
(c) Other Variables
(d) Use of the Selection Procedure
(e) Bibliography
(2) Evidence from Content Validity Studies
(3) Evidence from Construct Validity Studies
F. Evidence of Validity from Cooperative Studies
G. Selection for Higher Level Jobs
H. Interim Use of Selection Procedures

Definitions

16. Definitions

Appendix

17. Policy Statement on Affirmative Action (see Section 13B)
18. Citations

General Principles

Section 1. *Statement of purpose.*—A. *Need for uniformity—Issuing agencies.* The Federal government's need for a uniform set of principles on the question of the use of tests and other selection procedures has long been recognized. The Equal Employment Opportunity Commission, the Civil Service Commission, the Department of Labor, and the Department of Justice jointly have adopted these uniform guidelines to meet that need, and to apply the same principles to the Federal Government as are applied to other employers.

B. *Purpose of guidelines.* These guidelines incorporate a single set of principles which are designed to assist employers, labor organizations, employment agencies, and licensing and certification boards to comply with requirements of Federal law prohibiting employment practices which discriminate on grounds of race, color, religion, sex, and national origin. They are designed to provide a framework for determining the proper use of tests and other selection procedures. These guidelines do not require a user to conduct validity studies of selection procedures where no adverse impact results. However, all users are encouraged to use selection procedures which are valid, especially users operating under merit principles.

C. *Relation to prior guidelines.* These guidelines are based upon and supersede previously issued guidelines on employee selection procedures. These guidelines have been built upon court decisions, the previously issued guidelines of the agencies, and the practical experience of the agencies, as well as the standards of the psychological profession. These guidelines are intended to be consistent with existing law.

Sec. 2. *Scope.*—A. *Application of guidelines.* These guidelines will be applied by the Equal Employment Opportunity Commission in the enforcement of title VII of the Civil Rights Act of 1964, as amended by the Equal Employment Opportunity Act of 1972 (hereinafter "Title VII"); by the Department of Labor, and the contract compliance agencies until the transfer of authority contemplated by the President's Reorganization Plan No. 1 of 1978, in the administration and enforcement of Executive Order 11246, as amended by Executive Order 11375 (hereinafter "Executive Order 11246"); by the Civil Service Commission and other Federal agencies subject to section 717 of Title VII; by the Civil Service Commission in exercising its responsibilities toward State and local governments under section 208(b)(1) of the Intergovernmental-Personnel Act; by the Department of Justice in exercising its responsibilities under Federal law; by the Office of Revenue Sharing of the Department of the Treasury under the State and Local Fiscal Assistance Act of 1972, as amended; and by any other Federal agency which adopts them.

B. *Employment decisions.* These guidelines apply to tests and other selection procedures which are used as a basis for any employment decision. Employment decisions include but are not limited to hiring, promotion, demotion, membership (for example, in a labor organization), referral, retention, and licensing and certification, to the extent that licensing and certification may be covered by Federal equal employment opportunity law. Other selection decisions, such as selection for training or transfer, may also be considered employment decisions if they lead to any of the decisions listed above.

C. *Selection procedures.* These guidelines apply only to selection procedures which are used as a basis for making employment decisions. For example, the use of recruiting procedures designed to attract members of a particular race, sex, or ethnic group, which were previously denied employment opportunities or which are currently underutilized, may be necessary to bring an employer into compliance with Federal law, and is frequently an essential element of any effective affirmative action program; but recruitment practices are not considered by these guidelines to be selection procedures. Similarly, these guidelines do not pertain to the question of the lawfulness of a seniority system within the meaning of section 703(h), Executive Order 11246 or other provisions of Federal law or regulation, except to the extent that such systems utilize selection procedures to determine qualifications or abilities to perform the job. Nothing in these guidelines is intended or should be interpreted as discouraging the use of a selection procedure for the purpose of determining qualifications or for the purpose of selection on the basis of relative qualifications, if the selection procedure had been validated in accord with these guidelines for each such purpose for which it is to be used.

D. *Limitations.* These guidelines apply only to persons subject to Title VII, Executive Order 11246, or other equal employment opportunity requirements of Federal law. These guidelines do not apply to responsibilities under the Age Discrimination in Employment Act of 1967, as amended, not to discriminate on the basis of age, or under sections 501, 503, and 504 of the Rehabilitation Act of 1973, not to discriminate on the basis of handicap.

E. *Indian preference not affected.* These guidelines do not restrict any obligation imposed or right granted by Federal law to users to extend a preference in employment to Indians living on or near an Indian reservation in connection with employment opportunities on or near an Indian reservation.

Sec. 3. *Discrimination defined: Relationship between use of selection procedures and discrimination.*—A. *Procedure having adverse impact constitutes discrimination unless justified.* The use of any selection procedure which has an adverse impact on the hiring, promotion, or other employment or membership opportunities of members of any race, sex, or ethnic group will be considered to be discriminatory and inconsistent with these guidelines, unless the procedure has been validated in accordance with these guidelines, or the provisions of section 6 below are satisfied.

B. *Consideration of suitable alternative selection procedures.* Where two or more selection procedures are available which serve the user's legitimate interest in efficient and trustworthy workmanship, and which are substantially equally valid for a given purpose, the user should use the procedure which has been demonstrated to have the lesser adverse impact. Accordingly, whenever a validity study is called for by these guidelines, the user should include, as a part of the validity study, an investigation of suitable alternative selection procedures and suitable alternative methods of using the selection procedure which have as little adverse impact as possible, to determine the appropriateness of using or validating them in accord with these guidelines. If a user has made a reasonable effort to become aware of such alternative procedures and validity has been demonstrated in accord with these guidelines, the use of the test or other selection procedure may continue until such time as it should reasonably be reviewed for currency. Whenever the user is shown an alternative selection procedure with evidence of less adverse impact and substantial evidence of validity for the same job in similar circumstances, the user should investigate it to determine the appropriateness of using or validating it in accord with these guidelines. This subsection is not intended to preclude the combination

of procedures into a significantly more valid procedure, if the use of such a combination has been shown to be in compliance with the guidelines.

Sec. 4. *Information on impact.*—A. *Records concerning impact.* Each user should maintain and have available for inspection records or other information which will disclose the impact which its tests and other selection procedures have upon employment opportunities of persons by identifiable race, sex, or ethnic group as set forth in subparagraph B below in order to determine compliance with these guidelines. Where there are large numbers of applicants and procedures are administered frequently, such information may be retained on a sample basis, provided that the sample is appropriate in terms of the applicant population and adequate in size.

B. *Applicable race, sex, and ethnic groups for recordkeeping.* The records called for by this section are to be maintained by sex, and the following races and ethnic groups: Blacks (Negroes), American Indians (including Alaskan Natives), Asians (including Pacific Islanders), Hispanic (including persons of Mexican, Puerto Rican, Cuban, Central or South American, or other Spanish origin or culture regardless of race), whites (Caucasians) other than Hispanic, and totals. The race, sex, and ethnic classifications called for by this section are consistent with the Equal Employment Opportunity Standard Form 100, Employer Information Report EEO-1 series of reports. The user should adopt safeguards to insure that the records required by this paragraph are used for appropriate purposes such as determining adverse impact, or (where required) for developing and monitoring affirmative action programs, and that such records are not used improperly. See sections 4E and 17(4), below.

C. *Evaluation of selection rates. The "bottom line."* If the information called for by sections 4A and B above shows that the total selection process for a job has an adverse impact, the individual components of the selection process should be evaluated for adverse impact. If this information shows that the total selection process does not have an adverse impact, the Federal enforcement agencies, in the exercise of their administrative and prosecutorial discretion, in usual circumstances, will not expect a user to evaluate the individual components for adverse impact, or to validate such individual components, and will not take enforcement action based upon adverse impact of any component of that process, including the separate parts of a multipart selection procedure or any separate procedure that is used as an alternative method of selection. However, in the following circumstances the Federal enforcement agencies will expect a user to evaluate the individual components for adverse impact and may, where appropriate, take enforcement action with respect to the individual components: (1) where the selection procedure is a significant factor in the continuation of patterns of assignments of incumbent employees caused by prior discriminatory employment practices, (2) where the weight of court decisions or administrative interpretations hold that a specific procedure (such as height or weight requirements or no-arrest records) is not job related in the same or similar circumstances. In unusual circumstances, other than those listed in (1) and (2) above, the Federal enforcement agencies may request a user to evaluate the individual components for adverse impact and may, where appropriate, take enforcement action with respect to the individual component.

D. *Adverse impact and the "four-fifths rule."* A selection rate for any race, sex, or ethnic group which is less than four-fifths (4/5) (or eighty percent) of the rate for the group with the highest rate will generally be regarded by the Federal enforcement agencies as evidence of adverse impact, while a greater than four-fifths rate will generally not be regarded by Federal enforcement agencies as evidence of adverse impact. Smaller differences in selection rate may nevertheless constitute adverse impact, where they are significant in both statistical and practical terms or where a user's actions have discouraged applicants disproportionately on grounds of race, sex, or ethnic group. Greater differences in selection rate may not constitute adverse impact where the differences are based on small numbers and are not statistically significant, or where special recruiting or other programs cause the pool of minority or female candidates to be atypical of the normal pool of applicants from that group. Where the user's evidence concerning the impact of a selection procedure indicates adverse impact but is based upon numbers which are too small to be reliable, evidence concerning the impact of the procedure over a longer period of time and/or evidence concerning the impact which the selection procedure had when used in the same manner in similar circumstances elsewhere may be considered in determining adverse impact. Where the user has not maintained data on adverse impact as required by the documentation section of applicable guidelines, the Federal enforcement agencies may draw an inference of adverse impact of the selection process from the failure of the user to maintain such data, if the user has an underutilization of a group in the job category, as compared to the group's representation in the relevant labor market or, in the case of jobs filled from within, the applicable work force.

E. *Consideration of user's equal employment opportunity posture.* In carrying out their obligations, the Federal enforcement agencies will consider the general posture of the user with respect to equal employment opportunity for the job or group of jobs in question. Where a user has adopted an affirmative action program, the Federal enforcement agencies will consider the provisions of that program, including the goals and timetables which the user has adopted and the progress which the user has made in carrying out that program and in meeting the goals and timetables. While such affirmative action programs may in design and execution be race, color, sex, or ethnic conscious, selection procedures under such programs should be based upon the ability or relative ability to do the work.

Sec. 5. *General standards for validity studies.*—A. *Acceptable types of validity studies.* For the purposes of satisfying these guidelines, users may rely upon criterion-related validity studies, content validity studies or construct validity studies, in accordance with the standards set forth in the technical standards of these guidelines, section 14 below. New strategies for showing the validity of selection procedures will be evaluated as they become accepted by the psychological profession.

B. *Criterion-related, content, and construct validity.* Evidence of the validity of a test or other selection procedure by a criterion-related validity study should consist of empirical data demonstrating that the selection procedure is predictive of or significantly correlated with important elements of job performance. See section 14B below. Evidence of the validity of a test or other selection procedure by a content validity study should consist of data showing that the content of the selection procedure is representative of important aspects of performance on the job for which the candidates are to be evaluated. See section 14C below. Evidence of the validity of a test or other selection procedure through a construct validity study should consist of data showing that the procedure measures the degree to which candidates have identifiable characteristics which have been determined to be important in successful performance in the job for which the candidates are to be evaluated. See section 14D below.

C. *Guidelines are consistent with professional standards.* The provisions of these guidelines relating to validation of selection procedures are intended to be consistent with generally accepted professional standards for evaluating standardized tests and other selection procedures, such as those described in the Standards for Educational and Psychological Tests prepared by a joint committee of the American Psychological Association, the American Educational Research Association, and the National Council on Measurement in Education (American Psychological Association, Washington, D.C., 1974) (hereinafter "A.P.A. Standards") and standard textbooks and journals in the field of personnel selection.

D. *Need for documentation of validity.* For any selection procedure which is part of a selection process which has an adverse impact and which selection procedure has an adverse impact, each user should maintain and have available such documentation as is described in section 15 below.

E. *Accuracy and standardization.* Validity studies should be carried out under conditions which assure insofar as possible the adequacy and accuracy of the research and the report. Selection procedures should be administered and scored under standardized conditions.

F. *Caution against selection on basis of knowledges, skills, or ability learned in brief orientation period.* In general, users should avoid making employment decisions on the basis of measures of knowledges, skills, or abilities which are normally learned in a brief orientation period, and which have an adverse impact.

G. *Method of use of selection procedures.* The evidence of both the validity and utility

of a selection procedure should support the method the user chooses for operational use of the procedure, if that method of use has a greater adverse impact than another method of use. Evidence which may be sufficient to support the use of a selection procedure on a pass/fail (screening) basis may be insufficient to support the use of the same procedure on a ranking basis under these guidelines. Thus, if a user decides to use a selection procedure on a ranking basis, and that method of use has a greater adverse impact than use on an appropriate pass/fail basis (see section 5H below), the user should have sufficient evidence of validity and utility to support the use on a ranking basis. See sections 3B, 14B (5) and (6), and 14C (8) and (9).

H. *Cutoff scores.* Where cutoff scores are used, they should normally be set so as to be reasonable and consistent with normal expectations of acceptable proficiency within the work force. Where applicants are ranked on the basis of properly validated selection procedures and those applicants scoring below a higher cutoff score than appropriate in light of such expectations have little or no chance of being selected for employment, the higher cutoff score may be appropriate, but the degree of adverse impact should be considered.

I. *Use of selection procedures for higher level jobs.* If job progression structures are so established that employees will probably, within a reasonable period of time and in a majority of cases, progress to a higher level, it may be considered that the applicants are being evaluated for a job or jobs at the higher level. However, where job progression is not so nearly automatic, or the time span is such that higher level jobs or employees' potential may be expected to change in significant ways, it should be considered that applicants are being evaluated for a job at or near the entry level. A "reasonable period of time" will vary for different jobs and employment situations but will seldom be more than 5 years. Use of selection procedures to evaluate applicants for a higher level job would not be appropriate:

(1) If the majority of those remaining employed do not progress to the higher level job;

(2) If there is a reason to doubt that the higher level job will continue to require essentially similar skills during the progression period; or

(3) If the selection procedures measure knowledges, skills, or abilities required for advancement which would be expected to develop principally from the training or experience on the job.

J. *Interim use of selection procedures.* Users may continue the use of a selection procedure which is not at the moment fully supported by the required evidence of validity, provided: (1) The user has available substantial evidence of validity, and (2) the user has in progress, when technically feasible, a study which is designed to produce the additional evidence required by these guidelines within a reasonable time. If such a study is not technically feasible, see section 6B. If the study does not demonstrate validity, this provision of these guidelines for interim use shall not constitute a defense in any action, nor shall it relieve the user of any obligations arising under Federal law.

K. *Review of validity studies for currency.* Whenever validity has been shown in accord with these guidelines for the use of a particular selection procedure for a job or group of jobs, additional studies need not be performed until such time as the validity study is subject to review as provided in section 3B above. There are no absolutes in the area of determining the currency of a validity study. All circumstances concerning the study, including the validation strategy used, and changes in the relevant labor market and the job should be considered in the determination of when a validity study is outdated.

Sec. 6. *Use of selection procedures which have not been validated.*—A. *Use of alternate selection procedures to eliminate adverse impact.* A user may choose to utilize alternative selection procedures in order to eliminate adverse impact or as part of an affirmative action program. See section 13 below. Such alternative procedures should eliminate the adverse impact in the total selection process, should be lawful and should be as job related as possible.

B. *Where validity studies cannot or need not be performed.* There are circumstances in which a user cannot or need not utilize the validation techniques contemplated by these guidelines. In such circumstances, the user should utilize selection procedures which are as job related as possible and which will minimize or eliminate adverse impact, as set forth below.

(1) *Where informal or unscored procedures are used.* When an informal or unscored selection procedure which has an adverse impact is utilized, the user should eliminate the adverse impact, or modify the procedure to one which is a formal, scored or quantified measure or combination of measures and then validate the procedure in accord with these guidelines, or otherwise justify continued use of the procedure in accord with Federal law.

(2) *Where formal and scored procedures are used.* When a formal and scored selection procedure is used which has an adverse impact, the validation techniques contemplated by these guidelines usually should be followed if technically feasible. Where the user cannot or need not follow the validation techniques anticipated by these guidelines, the user should either modify the procedure to eliminate adverse impact or otherwise justify continued use of the procedure in accord with Federal law.

Sec. 7. *Use of other validity studies.*—A. *Validity studies not conducted by the user.* Users may, under certain circumstances, support the use of selection procedures by validity studies conducted by other users or conducted by test publishers or distributors and described in test manuals. While publishers of selection procedures have a professional obligation to provide evidence of validity which meets generally accepted professional standards (see section 5C above), users are cautioned that they are responsible for compliance with these guidelines. Accordingly, users seeking to obtain selection procedures from publishers and distributors should be careful to determine that, in the event the user becomes subject to the validity requirements of these guidelines, the necessary information to support validity has been determined and will be made available to the user.

B. *Use of criterion-related validity evidence from other sources.* Criterion-related validity studies conducted by one test user, or described in test manuals and the professional literature, will be considered acceptable for use by another user when the following requirements are met:

(1) *Validity evidence.* Evidence from the available studies meeting the standards of section 14B below clearly demonstrates that the selection procedure is valid;

(2) *Job similarity.* The incumbents in the user's job and the incumbents in the job or group of jobs on which the validity study was conducted perform substantially the same major work behaviors, as shown by appropriate job analyses both on the job or group of jobs on which the validity study was performed and on the job for which the selection procedure is to be used; and

(3) *Fairness evidence.* The studies include a study of test fairness for each race, sex, and ethnic group which constitutes a significant factor in the borrowing user's relevant labor market for the job or jobs in question. If the studies under consideration satisfy (1) and (2) above but do not contain an investigation of test fairness, and it is not technically feasible for the borrowing user to conduct an internal study of test fairness, the borrowing user may utilize the study until studies conducted elsewhere meeting the requirements of these guidelines show test unfairness, or until such time as it becomes technically feasible to conduct an internal study of test fairness and the results of that study can be acted upon. Users obtaining selection procedures from publishers should consider, as one factor in the decision to purchase a particular selection procedure, the availability of evidence concerning test fairness.

C. *Validity evidence from multiunit study.* If validity evidence from a study covering more than one unit within an organization statisfies the requirements of section 14B below, evidence of validity specific to each unit will not be required unless there are variables which are likely to affect validity significantly.

D. *Other significant variables.* If there are variables in the other studies which are likely to affect validity significantly, the user may not rely upon such studies, but will be expected either to conduct an internal validity study or to comply with section 6 above.

Sec. 8. *Cooperative studies.*—A. *Encouragement of cooperative studies.* The agencies issuing these guidelines encourage employers, labor organizations, and employment agencies to cooperate in research, development, search for lawful alternatives, and validity studies in order to achieve procedures which are consistent with these guidelines.

B. *Standards for use of cooperative studies.* If validity evidence from a cooperative study satisfies the requirements of section 14 below, evidence of validity specific to each user will not be required unless there are variables in the user's situation which are likely to affect validity significantly.

Sec. 9. *No assumption of validity.*—A. *Unacceptable substitutes for evidence of validity.* Under no circumstances will the general reputation of a test or other selection procedures, its author or its publisher, or casual reports of it's validity be accepted in lieu of evidence of validity. Specifically ruled out are: assumptions of validity based on a procedure's name or descriptive labels; all forms of promotional literature; data bearing on the frequency of a procedure's usage; testimonial statements and credentials of sellers, users, or consultants; and other nonempirical or anecdotal accounts of selection practices or selection outcomes.

B. *Encouragement of professional supervision.* Professional supervision of selection activities is encouraged but is not a substitute for documented evidence of validity. The enforcement agencies will take into account the fact that a thorough job analysis was conducted and that careful development and use of a selection procedure in accordance with professional standards enhance the probability that the selection procedure is valid for the job.

Sec. 10. *Employment agencies and employment services.*—A. *Where selection procedures are devised by agency.* An employment agency, including private employment agencies and State employment agencies, which agrees to a request by an employer or labor organization to device and utilize a selection procedure should follow the standards in these guidelines for determining adverse impact. If adverse impact exists the agency should comply with these guidelines. An employment agency is not relieved of its obligation herein because the user did not request such validation or has requested the use of some lesser standard of validation than is provided in these guidelines. The use of an employment agency does not relieve an employer or labor organization or other user of its responsibilities under Federal law to provide equal employment opportunity or its obligations as a user under these guidelines.

B. *Where selection procedures are devised elsewhere.* Where an employment agency or service is requested to administer a selection procedure which has been devised elsewhere and to make referrals pursuant to the results, the employment agency or service should maintain and have available evidence of the impact of the selection and referral procedures which it administers. If adverse impact results the agency or service should comply with these guidelines. If the agency or service seeks to comply with these guidelines by reliance upon validity studies or other data in the possession of the employer, it should obtain and have available such information.

Sec. 11. *Disparate treatment.* The principles of disparate or unequal treatment must be distinguished from the concepts of validation. A selection procedure—even though validated against job performance in accordance with these guidelines—cannot be imposed upon members of a race, sex, or ethnic group where other employees, applicants, or members have not been subjected to that standard. Disparate treatment occurs where members of a race, sex, or ethnic group have been denied the same employment, promotion, membership, or other employment opportunities as have been available to other employees or applicants. Those employees or applicants who have been denied equal treatment, because of prior discriminatory practices or policies, must at least be afforded the same opportunities as had existed for other employees or applicants during the period of discrimination. Thus, the persons who were in the class of persons discriminated against during the period the user followed the discriminatory practices should be allowed the opportunity to qualify under less stringent selection procedures previously followed, unless the user demonstrates that the increased standards are required by business necessity. This section does not prohibit a user who has not previously followed merit standards from adopting merit standards which are in compliance with these guidelines; nor does it preclude a user who has previously used invalid or unvalidated selection procedures from developing and using procedures which are in accord with these guidelines.

Sec. 12. *Retesting of applicants.* Users should provide a reasonable opportunity for retesting and reconsideration. Where examinations are administered periodically with public notice, such reasonable opportunity exists, unless persons who have previously been tested are precluded from retesting. The user may however take reasonable steps to preserve the security of its procedures.

Sec. 13. *Affirmative action.*—A. *Affirmative action obligations.* The use of selection procedures which have been validated pursuant to these guidelines does not relieve users of any obligations they may have to undertake affirmative action to assure equal employment opportunity. Nothing in these guidelines is intended to preclude the use of lawful selection procedures which assist in remedying the effects of prior discriminatory practices, or the achievement of affirmative action objectives.

B. *Encouragement of voluntary affirmative action programs.* These guidelines are also intended to encourage the adoption and implementation of voluntary affirmative action programs by users who have no obligation under Federal law to adopt them; but are not intended to impose any new obligations in that regard. The agencies issuing and endorsing these guidelines endorse for all private employers and reaffirm for all governmental employers the Equal Employment Opportunity Coordinating Council's "Policy Statement on Affirmative Action Programs for State and Local Government Agencies" (41 FR 38814, September 13, 1976). That policy statement is attached hereto as appendix, section 17.

Technical Standards

Sec. 14. *Technical standards for validity studies.* The following minimum standards, as applicable, should be met in conducting a validity study. Nothing in these guidelines is intended to preclude the development and use of other professionally acceptable techniques with respect to validation of selection procedures. Where it is not technically feasible for a user to conduct a validity study, the user has the obligation otherwise to comply with these guidelines. See sections 6 and 7 above.

A. *Validity studies should be based on review of information about the job.* Any validity study should be based upon a review of information about the job for which the selection procedure is to be used. The review should include a job analysis except as provided in section 14B(3) below with respect to criterion-related validity. Any method of job analysis may be used if it provides the information required for the specific validation strategy used.

B. *Technical standards for criterion-related validity studies.*—(1) *Technical feasibility.* Users choosing to validate a selection procedure by a criterion-related validity strategy should determine whether it is technically feasible (as defined in section 16) to conduct such a study in the particular employment context. The determination of the number of persons necessary to permit the conduct of a meaningful criterion-related study should be made by the user on the basis of all relevant information concerning the selection procedure, the potential sample and the employment situation. Where appropriate, jobs with substantially the same major work behaviors may be grouped together for validity studies, in order to obtain an adequate sample. These guidelines do not require a user to hire or promote persons for the purpose of making it possible to conduct a criterion-related study.

(2) *Analysis of the job.* There should be a review of job information to determine measures of work behavior(s) or performance that are relevant to the job or group of jobs in question. These measures or criteria are relevant to the extent that they represent critical or important job duties, work behaviors or work outcomes as developed from the review of job information. The possibility of bias should be considered both in selection of the criterion measures and their application. In view of the possibility of bias in subjective evaluations, supervisory rating techniques and instructions to raters should be carefully developed. All criterion measures and the methods for gathering data need to be examined for freedom from factors which would unfairly alter scores of members of any group. The relevance of criteria and their freedom from bias are of particular concern when there are significant differences in measures of job performance for different groups.

(3) *Criterion measures.* Proper safeguards should be taken to insure that scores on selection procedures do not enter into any judgments of employee adequacy that are to be used as criterion measures. Whatever criteria are used should represent important or critical work behavior(s) or work outcomes. Certain criteria may be used without a full job analysis if the user can show the importance of the criteria to the particular employment context. These criteria include but are not limited to production rate, error rate, tardiness, absenteeism, and length of service. A standardized rating of overall work performance may be used where a study of the job shows that it is an appropriate criterion. Where performance in

training is used as a criterion, success in training should be properly measured and the relevance of the training should be shown either through a comparsion of the content of the training program with the critical or important work behavior(s) of the job(s), or through a demonstration of the relationship between measures of performance in training and measures of job performance. Measures of relative success in training include but are not limited to instructor evaluations, performance samples, or tests. Criterion measures consisting of paper and pencil tests will be closely reviewed for job relevance.

(4) *Representativeness of the sample.* Whether the study is predictive or concurrent, the sample subjects should insofar as feasible be representative of the candidates normally available in the relevant labor market for the job or group of jobs in question, and should insofar as feasible include the races, sexes, and ethnic groups normally available in the relevant job market. In determining the representativeness of the sample in a concurrent validity study, the user should take into account the extent to which the specific knowledges or skills which are the primary focus of the test are those which employees learn on the job.

Where samples are combined or compared, attention should be given to see that such samples are comparable in terms of the actual job they perform, the length of time on the job where time on the job is likely to affect performance, and other relevant factors likely to affect validity differences; or that these factors are included in the design of the study and their effects identified.

(5) *Statistical relationships.* The degree of relationship between selection procedure scores and criterion measures should be examined and computed, using professionally acceptable statistical procedures. Generally, a selection procedure is considered related to the criterion, for the purposes of these guidelines, when the relationship between performance on the procedure and performance on the criterion measure is statistically significant at the 0.05 level of significance, which means that it is sufficiently high as to have a probability of no more than one (1) in twenty (20) to have occurred by chance. Absence of a statistically significant relationship between a selection procedure and job performance should not necessarily discourage other investigations of the validity of that selection procedure.

(6) *Operational use of selection procedures.* Users should evaluate each selection procedure to assure that it is appropriate for operational use, including establishment of cutoff scores or rank ordering. Generally, if other factors reman the same, the greater the magnitude of the relationship (e.g., coorelation coefficent) between performance on a selection procedure and one or more criteria of performance on the job, and the greater the importance and number of aspects of job performance covered by the criteria, the more likely it is that the procedure will be appropriate for use. Reliance upon a selection procedure which is significantly related to a criterion measure, but which is based upon a study involving a large number of subjects and has a low correlation coefficient will be subject to close review if it has a large adverse impact. Sole reliance upon a single selection instrument which is related to only one of many job duties or aspects of job performance will also be subject to close review. The appropriateness of a selection procedure is best evaluated in each particular situation and there are no minimum correlation coefficients applicable to all employment situations. In determining whether a selection procedure is appropriate for operational use the following considerations should also be taken into account: The degree of adverse impact of the procedure, the availability of other selection procedures of greater or substantially equal validity.

(7) *Overstatement of validity findings.* Users should avoid reliance upon techniques which tend to overestimate validity findings as a result of capitalization on chance unless an appropriate safeguard is taken. Reliance upon a few selection procedures or criteria of successful job performance when many selection procedures or criteria of performance have been studied, or the use of optimal statistical weights for selection procedures computed in one sample, are techniques which tend to inflate validity estimates as a result of chance. Use of a large sample is one safeguard: cross-validation is another.

(8) *Fairness.* This section generally calls for studies of unfairness where technically feasible. The concept of fairness or unfairness of selection procedures is a developing concept. In addition, fairness studies generally require substantial numbers of employees in the job or group of jobs being studied. For these reasons, the Federal enforcement agencies recognize that the obligation to conduct studies of fairness imposed by the guidelines generally will be upon users or groups of users with a large number of persons in a a job class, or test developers; and that small users utilizing their own selection procedures will generally not be obligated to conduct such studies because it will be technically infeasible for them to do so.

(a) *Unfairness defined.* When members of one race, sex, or ethnic group characteristically obtain lower scores on a selection procedure than members of another group, and the differences in scores are not reflected in differences in a measure of job performance, use of the selection procedure may unfairly deny opportunities to members of the group that obtains the lower scores.

(b) *Investigation of fairness.* Where a selection procedure results in an adverse impact on a race, sex, or ethnic group identified in accordance with the classifications set forth in section 4 above and that group is a significant factor in the relevant labor market, the user generally should investigate the possible existence of unfairness for that group if it is technically feasible to do so. The greater the severity of the adverse impact on a group, the greater the need to investigate the possible existence of unfairness. Where the weight of evidence from other studies shows that the selection procedure predicts fairly for the group in question and for the same or similar jobs, such evidence may be relied on in connection with the selection procedure at issue.

(c) *General considerations in fairness investigations.* Users conducting a study of fairness should review the A.P.A. Standards regarding investigation of possible bias in testing. An investigation of fairness of a selection procedure depends on both evidence of validity and the manner in which the selection procedure is to be used in a particular employment context. Fairness of a selection procedure cannot necessarily be specified in advance without investigating these factors. Investigation of fairness of a selection procedure in samples where the range of scores on selection procedures or criterion measures is severely restricted for any subgroup sample (as compared to other subgroup samples) may produce misleading evidence of unfairness. That factor should accordingly be taken into account in conducting such studies and before reliance is placed on the results.

(d) *When unfairness is shown.* If unfairness is demonstrated through a showing that members of a particular group perform better or poorer on the job than their scores on the selection procedure would indicate through comparison with how members of other groups perform, the user may either revise or replace the selection instrument in accordance with these guidelines, or may continue to use the selection instrument operationally with appropriate revisions in its use to assure compatibility between the probability of successful job performance and the probability of being selected.

(e) *Technical feasibility of fairness studies.* In addition to the general conditions needed for technical feasibility for the conduct of a criterion-related study (see section 16, below) an investigation of fairness requires the following:

(i) An adequate sample of persons in each group available for the study to achieve findings of statistical significance. Guidelines do not require a user to hire or promote persons on the basis of group classifications for the purpose of making it possible to conduct a study of fairness; but the user has the obligation otherwise to comply with these guidelines.

(ii) The samples for each group should be comparable in terms of the actual job they perform, length of time on the job where time on the job is likely to affect performance, and other relevant factors likely to affect validity differences; or such factors should be included in the design of the study and their effects identified.

(f) *Continued use of selection procedures when fairness studies not feasible.* If a study of fairness should otherwise be performed, but is not technically feasible, a selection procedure may be used which has otherwise met the validity standards of these guidelines, unless the technical infeasibility resulted from discriminatory employment practices which are demonstrated by facts other than past failure to conform with requirements for validation of selection procedures. However, when it becomes technically feasible for the user to perform a study of fairness and such a study is otherwise called for, the user should conduct the study of fairness.

C. *Technical standards for content validity studies.*—(1) *Appropriateness of content validity studies.* Users choosing to validate a selection procedure by a content validity strategy should determine whether it is appropriate to conduct such a study in the particular employment context. A selection procedure can be supported by a content validity strategy to the extent that it is a representative sample of the content of the job. Selection procedures which purport to measure knowledges, skills, or abilities may in certain circumstances be justified by content validity, although they may not be representative samples, if the knowledge, skill, or ability measured by the selection procedure can be operationally defined as provided in section 14C(4) below, and if that knowledge, skill, or ability is a necessary prerequisite to successful job performance.

A selection procedure based upon inferences about mental processes cannot be supported solely or primarily on the basis of content validity. Thus, a content strategy is not appropriate for demonstrating the validity of selection procedures which purport to measure traits or constructs, such as intelligence, aptitude, personality, commonsense, judgment, leadership, and spatial ability. Content validity is also not an appropriate strategy when the selection procedure involves knowledges, skills, or abilities which an employee will be expected to learn on the job.

(2) *Job analysis for content validity.* There should be a job analysis which includes an analysis of the important work behavior(s) required for successful performance and their relative importance and, if the behavior results in work product(s), an analysis of the work product(s). Any job analysis should focus on the work behavior(s) and the tasks associated with them. If work behavior(s) are not observable, the job analysis should identify and analyze those aspects of the behavior(s) that can be observed and the observed work products. The work behavior(s) selected for measurement should be critical work behavior(s) and/or important work behavior(s) constituting most of the job.

(3) *Development of selection procedures.* A selection procedure designed to measure the work behavior may be developed specifically from the job and job analysis in question, or may have been previously developed by the user, or by other users or by a test publisher.

(4) *Standards for demonstrating content validity.* To demonstrate the content validity of a selection procedure, a user should show that the behavior(s) demonstrated in the selection procedure are a representative sample of the behavior(s) of the job in question or that the selection procedure provides a representative sample of the work product of the job. In the case of a selection procedure measuring a knowledge, skill, or ability, the knowledge, skill, or ability being measured should be operationally defined. In the case of a selection procedure measuring a knowledge, the knowledge being measured should be operationally defined as that body of learned information which is used in and is a necessary prerequisite for observable aspects of work behavior of the job. In the case of skills or abilities, the skill or ability being measured should be operationally defined in terms of observable aspects of work behavior of the job. For any selection procedure measuring a knowledge, skill, or ability the user should show that (a) the selection procedure measures and is a representative sample of that knowledge, skill, or ability; and (b) that knowledge, skill, or ability is used in and is a necessary prerequisite to performance of critical or important work behavior(s). In addition, to be content valid, a selection procedure measuring a skill or ability should either closely approximate an observable work behavior, or its product should closely approximate an observable work product. If a test purports to sample a work behavior or to provide a sample of a work product, the manner and setting of the selection procedure and its level and complexity should closely approximate the work situation. The closer the content and the context of the selection procedure are to work samples or work behaviors, the stronger is the basis for showing content validity. As the content of the selection procedure less resembles a work behavior, or the setting and manner of the administration of the selection procedure less resemble the work situation, or the result less resembles a work product, the less likely the selection procedure is to be content valid, and the greater the need for other evidence of validity.

(5) *Reliability.* The reliability of selection procedures justified on the basis of content validity should be a matter of concern to the user. Whenever it is feasible, appropriate statistical estimates should be made of the reliability of the selection procedure.

(6) *Prior training or experience.* A requirement for or evaluation of specific prior training or experience based on content validity, including a specification of level or amount of training or experience, should be justified on the basis of the relationship between the content of the training or experience and the content of the job for which the training or experience is to be required or evaluated. The critical consideration is the resemblance between the specific behaviors, products, knowledges, skills, or abilities in the experience or training and the specific behaviors, products, knowledges, skills, or abilities required on the job, whether or not there is close resemblance between the experience or training as a whole and the job as a whole.

(7) *Content validity of training success.* Where a measure of success in a training program is used as a selection procedure and the content of a training program is justified on the basis of content validity, the use should be justified on the relationship between the content of the training program and the content of the job.

(8) *Operational use.* A selection procedure which is supported on the basis of content validity may be used for a job if it represents a critical work behavior (i.e., a behavior which is necessary for performance of the job) or work behaviors which constitute most of the important parts of the job.

(9) *Ranking based on content validity studies.* If a user can show, by a job analysis or otherwise, that a higher score on a content valid selection procedure is likely to result in better job performance, the results may be used to rank persons who score above minimum levels. Where a selection procedure supported solely or primarily by content validity is used to rank job candidates, the selection procedure should measure those aspects of performance which differentiate among levels of job performance.

D. *Technical standards for construct validity studies.*— (1) *Appropriateness of construct validity studies.* Construct validity is a more complex strategy than either criterion-related or content validity. Construct validation is a relatively new and developing procedure in the employment field, and there is at present a lack of substantial literature extending the concept to employment practices. The user should be aware that the effort to obtain sufficient empirical support for construct validity is both an extensive and arduous effort involving a series of research studies, which include criterion related validity studies and which may include content validity studies. Users choosing to justify use of a selection procedure by this strategy should therefore take particular care to assure that the validity study meets the standards set forth below.

(2) *Job analysis for construct validity studies.* There should be a job analysis. This job analysis should show the work behavior(s) required for successful performance of the job, or the groups of jobs being studied, the critical or important work behavior(s) in the job or group of jobs being studied, and an identification of the construct(s) believed to underlie successful performance of these critical or important work behaviors in the job or jobs in question. Each construct should be named and defined, so as to distinguish it from other constructs. If a group of jobs is being studied the jobs should have in common one or more critical or important work behaviors at a comparable level of complexity.

(3) *Relationship to the job.* A selection procedure should then be identified or developed which measures the construct identified in accord with subparagraph (2) above. The user should show by empirical evidence that the selection procedure is validly related to the construct and that the construct is validly related to the performance of critical or important work behavior(s). The relationship between the construct as measured by the selection procedure and the related work behavior(s) should be supported by empirical evidence from one or more criterion-related studies involving the job or jobs in question which satisfy the provisions of section 14B above.

(4) *Use of construct validity study without new criterion-related evidence.*—(a) *Standards for use.* Until such time as professional literature provides more guidance on the use of construct validity in employment situations, the Federal agencies will accept a claim of construct validity without a criterion-related study which satisfies section 14B above only when the selection procedure has been used elsewhere in a situation in which a criterion-related study has been conducted and the use of a criterion-related validity study in this context meets the standards for transportability of criterion-related validity studies as set forth above in section 7. However, if a study

pertains to a number of jobs having common critical or important work behaviors at a comparable level of complexity, and the evidence satisfies subparagraphs 14B (2) and (3) above for those jobs with criterion-related validity evidence for those jobs, the selection procedure may be used for all the jobs to which the study pertains. If construct validity is to be generalized to other jobs or groups of jobs not in the group studied, the Federal enforcement agencies will expect at a minimum additional empirical research evidence meeting the standards of subparagraphs section 14B (2) and (3) above for the additional jobs or groups of jobs.

(b) *Determination of common work behaviors.* In determining whether two or more jobs have one or more work behavior(s) in common, the user should compare the observed work behavior(s) in each of the jobs and should compare the observed work product(s) in each of the jobs. If neither the observed work behavior(s) in each of the jobs nor the observed work product(s) in each of the jobs are the same, the Federal enforcement agencies will presume that the work behavior(s) in each job are different. If the work behaviors are not observable, then evidence of similarity of work products and any other relevant research evidence will be considered in determining whether the work behavior(s) in the two jobs are the same.

Documentation of Impact and Validity Evidence

Sec. 15. *Documentation of impact and validity evidence.*—A. *Required information.* Users of selection procedures other than those users complying with section 15A(1) below should maintain and have available for each job information on adverse impact of the selection process for that job and, where it is determined a selection process has an adverse impact, evidence of validity as set forth below.

(1) *Simplified recordkeeping for users with less than 100 employees.* In order to minimize recordkeeping burdens on employers who employ one hundred (100) or fewer employees, and other users not required to file EEO-1, et seq., reports, such users may satisfy the requirements of this section 15 if they maintain and have available records showing, for each year:

(a) The number of persons hired, promoted, and terminated for each job, by sex, and where appropriate by race and national origin;

(b) The number of applicants for hire and promotion by sex and where appropriate by race and national origin; and

(c) The selection procedures utilized (either standardized or not standardized).

These records should be maintained for each race or national origin group (see section 4 above) constituting more than two percent (2%) of the labor force in the relevant labor area. However, it is not necessary to maintain records by race and/or national origin (see § 4 above) if one race or national origin group in the relevant labor area constitutes more than ninety-eight percent (98%) of the labor force in the area. If the user has reason to believe that a selection procedure has an adverse impact, the user should maintain any available evidence of validity for that procedure (see sections 7A and 8).

(2) *Information on impact.*—(a) *Collection of information on impact.* Users of selection procedures other than those complying with section 15A(1) above should maintain and have available for each job records or other information showing whether the total selection process for that job has an adverse impact on any of the groups for which records are called for by sections 4B above. Adverse impact determinations should be made at least annually for each such group which constitutes at least 2 percent of the labor force in the relevant labor area or 2 percent of the applicable workforce. Where a total selection process for a job has an adverse impact, the user should maintain and have available records or other information showing which components have an adverse impact. Where the total selection process for a job does not have an adverse impact, information need not be maintained for individual components except in circumstances set forth in subsection 15A(2)(b) below. If the determination of adverse impact is made using a procedure other than the "four-fifths rule," as defined in the first sentence of section 4D above, a justification, consistent with section 4D above, for the procedure used to determine adverse impact should be available.

(b) *When adverse impact has been eliminated in the total selection process.* Whenever the total selection process for a particular job has had an adverse impact, as defined in section 4 above, in any year, but no longer has an adverse impact, the user should maintain and have available the information on individual components of the selection process required in the preceding paragraph for the period in which there was adverse impact. In addition, the user should continue to collect such information for at least two (2) years after the adverse impact has been eliminated.

(c) *When data insufficient to determine impact.* Where there has been an insufficient number of selections to determine whether there is an adverse impact of the total selection process for a particular job, the user should continue to collect, maintain and have available the information on individual components of the selection process required in section 15(A)(2)(a) above until the information is sufficient to determine that the overall selection process does not have an adverse impact as defined in section 4 above, or until the job has changed substantially.

(3) *Documentation of validity evidence.*—(a) *Types of evidence.* Where a total selection process has an adverse impact (see section 4 above) the user should maintain and have available for each component of that process which has an adverse impact, one or more of the following types of documentation evidence:

(i) Documentation evidence showing criterion-related validity of the selection procedure (see section 15B, below).

(ii) Documentation evidence showing content validity of the selection procedure (see section 15C, below).

(iii) Documentation evidence showing construct validity of the selection procedure (see section 15D, below).

(iv) Documentation evidence from other studies showing validity of the selection procedure in the user's facility (see section 15E, below).

(v) Documentation evidence showing why a validity study cannot or need not be performed and why continued use of the procedure is consistent with Federal law.

(b) *Form of report.* This evidence should be compiled in a reasonably complete and organized manner to permit direct evaluation of the validity of the selection procedure. Previously written employer or consultant reports of validity, or reports describing validity studies completed before the issuance of these guidelines are acceptable if they are complete in regard to the documentation requirements contained in this section, or if they satisfied requirements of guidelines which were in effect when the validity study was completed. If they are not complete, the required additional documentation should be appended. If necessary information is not available the report of the validity study may still be used as documentation, but its adequacy will be evaluated in terms of compliance with the requirements of these guidelines.

(c) *Completeness.* In the event that evidence of validity is reviewed by an enforcement agency, the validation reports completed after the effective date of these guidelines are expected to contain the information set forth below. Evidence denoted by use of the word "(Essential)" is considered critical. If information denoted essential is not included, the report will be considered incomplete unless the user affirmatively demonstrates either its unavailability due to circumstances beyond the user's control or special circumstances of the user's study which make the information irrelevant. Evidence not so denoted is desirable but its absence will not be a basis for considering a report incomplete. The user should maintain and have available the information called for under the heading "Source Data" in sections 15B(11) and 15D(11). While it is a necessary part of the study, it need not be submitted with the report. All statistical results should be organized and presented in tabular or graphic form to the extent feasible.

B. *Criterion-related validity studies.* Reports of criterion-related validity for a selection procedure should include the following information:

(1) *User(s), location(s), and date(s) of study.* Dates and location(s) of the job analysis or review of job information, the date(s) and location(s) of the administration of the selection procedures and collection of criterion data, and the time between collection of data on selection procedures and criterion measures should be provided (Essential). If the study was conducted at several locations, the address of each location, including city and State, should be shown.

(2) *Problem and setting.* An explicit definition of the purpose(s) of the study and the circumstances in which the study was conducted should be provided. A description of existing selection procedures and cutoff scores, if any, should be provided.

(3) *Job anlysis or review of job information.* A description of the procedure used to

analyze the job or group of jobs, or to review the job information should be provided (Essential). Where a review of job information results in criteria which may be used without a full job analysis (see section 14B(3)), the basis for the selection of these criteria should be reported (Essential). Where a job analysis is required a complete description of the work behavior(s) or work outcome(s), and measures of their criticality or importance should be provided (Essential). The report should describe the basis on which the behavior(s) or outcome(s) were determined to be critical or important, such as the proportion of time spent on the respective behaviors, their level of difficulty, their frequency of performance, the consequences of error, or other appropriate factors (Essential). Where two or more jobs are grouped for a validity study, the information called for in this subsection should be provided for each of the jobs, and the justification for the grouping (see section 14B(1)) should be provided (Essential).

(4) *Job titles and codes.* It is desirable to provide the user's job title(s) for the job(s) in question and the corresponding job title(s) and code(s) from U.S. Employment Service's Dictionary of Occupational Titles.

(5) *Criterion measures.* The bases for the selection of the criterion measures should be provided, together with references to the evidence considered in making the selection of criterion measures (essential). A full description of all criteria on which data were collected and means by which they were observed, recorded, evaluated, and quantified, should be provided (essential). If rating techniques are used as criterion measures, the appraisal form(s) and instructions to the rater(s) should be included as part of the validation evidence, or should be explicitly described and available (essential). All steps taken to insure that criterion measures are free from factors which would unfairly alter the scores of members of any group should be described (essential).

(6) *Sample description.* A description of how the research sample was identified and selected should be included (essential). The race, sex, and ethnic composition of the sample, including those groups set forth in section 4A above, should be described (essential). This description should include the size of each subgroup (essential). A description of how the research sample compares with the relevant labor market or work force, the method by which the relevant labor market or work force was defined, and a discussion of the likely effects on validity of differences between the sample and the relevant labor market or work force, are also desirable. Descriptions of educational levels, length of service, and age are also desirable.

(7) *Description of selection procedures.* Any measure, combination of measures, or procedure studied should be completely and explicitly described or attached (essential). If commercially available selection procedures are studied, they should be described by title, form, and publisher (essential). Reports of reliability estimates and how they were established are desirable.

(8) *Techniques and results.* Methods used in analyzing data should be described (essential). Measures of central tendency (e.g., means) and measures of dispersion (e.g., standard deviations and ranges) for all selection procedures and all criteria should be reported for each race, sex, and ethnic group which constitutes a significant factor in the relevant labor market (essential). The magnitude and direction of all relationships between selection procedures and criterion measures investigated should be reported for each relevant race, sex, and ethnic group and for the total group (essential). Where groups are too small to obtain reliable evidence of the magnitude of the relationship, need not be reported separately. Statements regarding the statistical significance of results should be made (essential). Any statistical adjustments, such as for less then perfect reliability or for restriction of score range in the selection procedure or criterion should be described and explained; and uncorrected correlation coefficients should also be shown (essential). Where the statistical technique categorizes continuous data, such as biserial correlation and the phi coefficient, the categories and the bases on which they were determined should be described and explained (essential). Studies of test fairness should be included where called for by the requirements of section 14B(8) (essential). These studies should include the rationale by which a selection procedure was determined to be fair to the group(s) in question. Where test fairness or unfairness has been demonstrated on the basis of other studies, a bibliography of the relevant studies should be included (essential). If the bibliography includes unpublished studies, copies of these studies, or adequate abstracts or summaries, should be attached (essential). Where revisions have been made in a selection procedure to assure compatability between successful job performance and the probability of being selected, the studies underlying such revisions should be included (essential). All statistical results should be organized and presented by relevant race, sex, and ethnic group (essential).

(9) *Alternative procedures investigated.* The selection procedures investigated and available evidence of their impact should be identified (essential). The scope, method, and findings of the investigation, and the conclusions reached in light of the findings, should be fully described (essential).

(10) *Uses and applications.* The methods considered for use of the selection procedure (e.g., as a screening device with a cutoff score, for grouping or ranking, or combined with other procedures in a battery) and available evidence of their impact should be described (essential). This description should include the rationale for choosing the method for operational use, and the evidence of the validity and utility of the procedure as it is to be used (essential). The purpose for which the procedure is to be used (e.g., hiring, transfer, promotion) should be described (essential). If weights are assigned to different parts of the selection procedure, these weights and the validity of the weighted composite should be reported (essential). If the selection procedure is used with a cutoff score, the user should describe the way in which normal expectations of proficiency within the work force were determined and the way in which the cutoff score was determined (essential).

(11) *Source data.* Each user should maintain records showing all pertinent information about individual sample members and raters where they are used, in studies involving the validation of selection procedures. These records should be made available upon request of a compliance agency. In the case of individual sample members these data should include scores on the selection procedure(s), scores on criterion measures, age, sex, race, or ethnic group status, and experience on the specific job on which the validation study was conducted, and may also include such things as education, training, and prior job experience, but should not include names and social security numbers. Records should be maintained which show the ratings given to each sample member by each rater.

(12) *Contact person.* The name, mailing address, and telephone number of the person who may be contacted for further information about the validity study should be provided (essential).

(13) *Accuracy and completeness.* The report should describe the steps taken to assure the accuracy and completeness of the collection, analysis, and report of data and results.

C. *Content validity studies.* Reports of content validity for a selection procedure should include the following information:

(1) *User(s), location(s) and date(s) of study.* Dates and location(s) of the job analysis should be shown (essential).

(2) *Problem and setting.* An explicit definition of the purpose(s) of the study and the circumstances in which the study was conducted should be provided. A description of existing selection procedures and cutoff scores, if any, should be provided.

(3) *Job analysis—Content of the job.* A description of the method used to analyze the job should be provided (essential). The work behavior(s), the associated tasks, and, if the behavior results in a work product, the work products should be completely described (essential). Measures of criticality and/or importance of the work behavior(s) and the method of determining these measures should be provided (essential). Where the job analysis also identified the knowledges, skills, and abilities used in work behavior(s), an operational definition for each knowledge in terms of a body of learned information and for each skill and ability in terms of observable behaviors and outcomes, and the relationship between each knowledge, skill, or ability and each work behavior, as well as the method used to determine this relationship, should be provided (essential). The work situation should be described, including the setting in which work behavior(s) are performed, and where appropriate, the manner in which knowledges, skills, or abilities are used, and the complexity and difficulty of the knowledge, skill, or ability as used in the work behavior(s).

(4) *Selection procedure and its content.* Selection procedures, including those constructed by or for the user, specific training requirements, composites of selection procedures, and any other

procedure supported by content validity, should be completely and explicitly described or attached (essential). If commercially available selection procedures are used, they should be described by title, form, and publisher (essential). The behaviors measured or sampled by the selection procedure should be explicitly described (essential). Where the selection procedure purports to measure a knowledge, skill, or ability, evidence that the selection procedure measures and is a representative sample of the knowledge, skill, or ability should be provided (essential).

(5) *Relationship between the selection procedure and the job.* The evidence demonstrating that the selection procedure is a representative work sample, a representative sample of the work behavior(s), or a representative sample of a knowledge, skill, or ability as used as a part of a work behavior and necessary for that behavior should be provided (essential). The user should identify the work behavior(s) which each item or part of the selection procedure is intended to sample or measure (essential). Where the selection procedure purports to sample a work behavior or to provide a sample of a work product, a comparison should be provided of the manner, setting, and the level of complexity of the selection procedure with those of the work situation (essential). If any steps were taken to reduce adverse impact on a race, sex, or ethnic group in the content of the procedure or in its administration, these steps should be described. Establishment of time limits, if any, and how these limits are related to the speed with which duties must be performed on the job, should be explained. Measures of central tend- ency (e.g., means) and measures of dispersion (e.g., standard deviations) and estimates of realibility should be reported for all selection procedures if available. Such reports should be made for relevant race, sex, and ethnic subgroups, at least on a statistically reliable sample basis.

(6) *Alternative procedures investigated.* The alternative selection procedures investigated and available evidence of their impact should be identified (essential). The scope, method, and findings of the investigation, and the conclusions reached in light of the findings, should be fully described (essential).

(7) *Uses and applications.* The methods considered for use of the selection procedure (e.g., as a screening device with a cutoff score, for grouping or ranking, or combined with other procedures in a battery) and available evidence of their impact should be described (essential). This description should include the rationale for choosing the method for operational use, and the evidence of the validity and utility of the procedure as it is to be used (essential). The purpose for which the procedure is to be used (e.g., hiring, transfer, promotion) should be described (essential). If the selection procedure is used with a cutoff score, the user should describe the way in which normal expectations of proficiency within the work force were determined and the way in which the cutoff score was determined (essential). In addition, if the selection procedure is to be used for ranking, the user should specify the evidence showing that a higher score on the selection procedure is likely to result in better job performance.

(8) *Contact person.* The name, mailing address, and telephone number of the person who may be contacted for further information about the validity study should be provided (essential).

(9) *Accuracy and completeness.* The report should describe the steps taken to assure the accuracy and completeness of the collection, analysis, and report of data and results.

D. *Construct validity studies.* Reports of construct validity for a selection procedure should include the following information:

(1) *User(s), location(s), and date(s) of study.* Date(s) and location(s) of the job analysis and the gathering of other evidence called for by these guidelines should be provided (essential).

(2) *Problem and setting.* An explicit definition of the purpose(s) of the study and the circumstances in which the study was conducted should be provided. A description of existing selection procedures and cutoff scores, if any, should be provided.

(3) *Construct definition.* A clear definition of the construct(s) which are believed to underlie successful performance of the critical or important work behavior(s) should be provided (essential). This definition should include the levels of construct performance relevant to the job(s) for which the selection procedure is to be used (essential). There should be a summary of the position of the construct in the psychological literature, or in the absence of such a position, a description of the way in which the definition and measurement of the construct was developed and the psychological theory underlying it (essential). Any quantitative data which identify or define the job constructs, such as factor analyses, should be provided (essential).

(4) *Job analysis.* A description of the method used to analyze the job should be provided (essential). A complete description of the work behavior(s) and, to the extent appropriate, work outcomes and measures of their criticality and/or importance should be provided (essential). The report should also describe the basis on which the behavior(s) or outcomes were determined to be important, such as their level of difficulty, their frequency of performance, the consequences of error or other appropriate factors (essential). Where jobs are grouped or compared for the purposes of generalizing validity evidence, the work behavior(s) and work product(s) for each of the jobs should be described, and conclusions concerning the similarity of the jobs in terms of observable work behaviors or work products should be made (essential).

(5) *Job titles and codes.* It is desirable to provide the selection procedure user's job title(s) for the job(s) in question and the corresponding job title(s) and code(s) from the United States Employment Service's dictionary of occupational titles.

(6) *Selection procedure.* The selection procedure used as a measure of the construct should be completely and explicitly described or attached (essential). If commercially available selection procedures are used, they should be identified by title, form and publisher (essential). The research evidence of the relationship between the selection procedure and the construct, such as factor structure, should be included (essential). Measures of central tendency, variability and reliability of the selection procedure should be provided (essential). Whenever feasible, these measures should be provided separately for each relevant race, sex and ethnic group.

(7) *Relationship to job performance.* The criterion-related study(ies) and other empirical evidence of the relationship between the construct measured by the selection procedure and the related work behavior(s) for the job or jobs in question should be provided (essential). Documentation of the criterion-related study(ies) should satisfy the provisions of section 15B above or section 15E(1) below, except for studies conducted prior to the effective date of these guidelines (essential). Where a study pertains to a group of jobs, and, on the basis of the study, validity is asserted for a job in the group, the observed work behaviors and the observed work products for each of the jobs should be described (essential). Any other evidence used in determining whether the work behavior(s) in each of the jobs is the same should be fully described (essential).

(8) *Alternative procedures investigated.* The alternative selection procedures investigated and available evidence of their impact should be identified (essential). The scope, method, and findings of the investigation, and the conclusions reached in light of the findings should be fully described (essential).

(9) *Uses and applications.* The methods considered for use of the selection procedure (e.g., as a screening device with a cutoff score, for grouping or ranking, or combined with other procedures in a battery) and available evidence of their impact should be described (essential). This description should include the rationale for choosing the method for operational use, and the evidence of the validity and utility of the procedure as it is to be used (essential). The purpose for which the procedure is to be used (e.g., hiring, transfer, promotion) should be described (essential). If weights are assigned to different parts of the selection procedure, these weights and the validity of the weighted composite should be reported (essential). If the selection procedure is used with a cutoff score, the user should describe the way in which normal expectations of proficiency within the work force were determined and the way in which the cutoff score was determined (essential).

(10) *Accuracy and completeness.* The report should describe the steps taken to assure the accuracy and completeness of the collection, analysis, and report of data and results.

(11) *Source data.* Each user should maintain records showing all pertinent information relating to its study of construct validity.

(12) *Contact person.* The name, mailing address, and telephone number of the individual who may be contacted for further information about the validity study should be provided (essential).

E. *Evidence of validity from other studies.* When validity of a selection procedure is supported by studies not done by the user, the evidence from the original study or studies should be compiled in a manner similar to that required in the appropriate section of this section 15 above. In addition, the following evidence should be supplied:

(1) *Evidence from criterion-related validity studies.*—a. *Job information.* A description of the important job behavior(s) of the user's job and the basis on which the behaviors were determined to be important should be provided (essential). A full description of the basis for determining that these important work behaviors are the same as those of the job in the original study (or studies) should be provided (essential).

b. *Relevance of criteria.* A full description of the basis on which the criteria used in the original studies are determined to be relevant for the user should be provided (essential).

c. *Other variables.* The similarity of important applicant pool or sample characteristics reported in the original studies to those of the user should be described (essential). A description of the comparison between the race, sex and ethnic composition of the user's relevant labor market and the sample in the original validity studies should be provided (essential).

d. *Use of the selection procedure.* A full description should be provided showing that the use to be made of the selection procedure is consistent with the findings of the original validity studies (essential).

e. *Bibliography.* A bibliography of reports of validity of the selection procedure for the job or jobs in question should be provided (essential). Where any of the studies included an investigation of test fairness, the results of this investigation should be provided (essential). Copies of reports published in journals that are not commonly available should be described in detail or attached (essential). Where a user is relying upon unpublished studies, a reasonable effort should be made to obtain these studies. If these unpublished studies are the sole source of validity evidence they should be described in detail or attached (essential). If these studies are not available, the name and address of the source, an adequate abstract or summary of the validity study and data, and a contact person in the source organization should be provided (essential).

(2) *Evidence from content validity studies.* See section 14C(3) and section 15C above.

(3) *Evidence from construct validity studies.* See sections 14D(2) and 15D above.

F. *Evidence of validity from cooperative studies.* Where a selection procedure has been validated through a cooperative study, evidence that the study satisfies the requirements of sections 7, 8 and 15E should be provided (essential).

G. *Selection for higher level job.* If a selection procedure is used to evaluate candidates for jobs at a higher level than those for which they will initially be employed, the validity evidence should satisfy the documentation provisions of this section 15 for the higher level job or jobs, and in addition, the user should provide: (1) a description of the job progression structure, formal or informal; (2) the data showing how many employees progress to the higher level job and the length of time needed to make this progression; and (3) an identification of any anticipated changes in the higher level job. In addition, if the test measures a knowledge, skill or ability, the user should provide evidence that the knowledge, skill or ability is required for the higher level job and the basis for the conclusion that the knowledge, skill or ability is not expected to develop from the training or experience on the job.

H. *Interim use of selection procedures.* If a selection procedure is being used on an interim basis because the procedure is not fully supported by the required evidence of validity, the user should maintain and have available (1) substantial evidence of validity for the procedure, and (2) a report showing the date on which the study to gather the additional evidence commenced, the estimated completion date of the study, and a description of the data to be collected (essential).

Definitions

Sec. 16. *Definitions.* The following definitions shall apply throughout these guidelines:

A. *Ability.* A present competence to perform an observable behavior or a behavior which results in an observable product.

B. *Adverse impact.* A substantially different rate of selection in hiring, promotion, or other employment decision which works to the disadvantage of members of a race, sex, or ethnic group. See section 4 of these guidelines.

C. *Compliance with these guidelines.* Use of a selection procedure is in compliance with these guidelines if such use has been validated in accord with these guidelines (as defined below), or if such use does not result in adverse impact on any race, sex, or ethnic group (see section 4, above), or, in unusual circumstances, if use of the procedure is otherwise justified in accord with Federal law. See section 6B, above.

D. *Content validity.* Demonstrated by data showing that the content of a selection procedure is representative of important aspects of performance on the job. See section 5B and section 14C.

E. *Construct validity.* Demonstrated by data showing that the selection procedure measures the degree to which candidates have identifiable characteristics which have been determined to be important for successful job performance. See section 5B and section 14D.

F. *Criterion-related validity.* Demonstrated by empirical data showing that the selection procedure is predictive of or significantly correlated with important elements of work behavior. See sections 5B and 14B.

G. *Employer.* Any employer subject to the provisions of the Civil Rights Act of 1964, as amended, including State or local governments and any Federal agency subject to the provisions of section 717 of the Civil Rights Act of 1964, as amended, and any Federal contractor or subcontractor or federally assisted construction contractor or subcontactor covered by Executive Order 11246, as amended.

H. *Employment agency.* Any employment agency subject to the provisions of the Civil Rights Act of 1964, as amended.

I. *Enforcement action.* For the purposes of section 4 a proceeding by a Federal enforcement agency such as a lawsuit or an administrative proceeding leading to debarment from or withholding, suspension, or termination of Federal Government contracts or the suspension or withholding of Federal Government funds; but not a finding of reasonable cause or a conciliation process or the issuance of right to sue letters under title VII or under Executive Order 11246 where such finding, conciliation, or issuance of notice of right to sue is based upon an individual complaint.

J. *Enforcement agency.* Any agency of the executive branch of the Federal Government which adopts these guidelines for purposes of the enforcement of the equal employment opportunity laws or which has responsibility for securing compliance with them.

K. *Job analysis.* A detailed statement of work behaviors and other information relevant to the job.

L. *Job description.* A general statement of job duties and responsibilities.

M. *Knowledge.* A body of information applied directly to the performance of a function.

N. *Labor organization.* Any labor organization subject to the provisions of the Civil Rights Act of 1964, as amended, and any committee subject thereto controlling apprenticeship or other training.

O. *Observable.* Able to be seen, heard, or otherwise perceived by a person other than the person performing the action.

P. *Race, sex, or ethnic group.* Any group of persons identifiable on the grounds of race, color, religion, sex, or national origin.

Q. *Selection procedure.* Any measure, combination of measures, or procedure used as a basis for any employment decision. Selection procedures include the full range of assessment techniques from traditional paper and pencil tests, performance tests, training programs, or probationary periods and physical, educational, and work experience requirements through informal or casual interviews and unscored application forms.

R. *Selection rate.* The proportion of applicants or candidates who are hired, promoted, or otherwise selected.

S. *Should.* The term "should" as used in these guidelines is intended to connote action which is necessary to achieve compliance with the guidelines, while recognizing that there are circumstances where alternative courses of action are open to users.

T. *Skill.* A present, observable competence to perform a learned psychomotor act.

U. *Technical feasibility.* The exist- ence of conditions permitting the conduct of meaningful criterion-related validity studies. These conditions include: (1) An adequate sample of persons available for the study to achieve findings of statistical significance; (2) having or being able to obtain a sufficient range of scores on the selection procedure and job performance measures to produce validity results which can be expected to be representative of the results if the ranges normally expected were utilized; and (3) having or being able to devise unbiased,

reliable and relevant measures of job performance or other criteria of employee adequacy. See section 14B(2). With respect to investigation of possible unfairness, the same considerations are applicable to each group for which the study is made. See section 14B(8).

V. *Unfairness of selection procedure.* A condition in which members of one race, sex, or ethnic group characteristically obtain lower scores on a selection procedure than members of another group, and the differences are not reflected in differences in measures of job performance. See section 14B(7).

W. *User.* Any employer, labor organization, employment agency, or licensing or certification board, to the extent it may be covered by Federal equal employment opportunity law, which uses a selection procedure as a basis for any employment decision. Whenever an employer, labor organization, or employment agency is required by law to restrict recruitment for any occupation to those applicants who have met licensing or certification requirements, the licensing or certifying authority to the extent it may be covered by Federal equal employment opportunity law will be considered the user with respect to those licensing or certification requirements. Whenever a State employment agency or service does no more than administer or monitor a procedure as permitted by Department of Labor regulations, and does so without making referrals or taking any other action on the basis of the results, the State employment agency will not be deemed to be a user.

X. *Validated in accord with these guidelines or properly validated.* A demonstration that one or more validity study or studies meeting the standards of these guidelines has been conducted, including investigation and, where appropriate, use of suitable alternative selection procedures as contemplated by section 3B, and has produced evidence of validity sufficient to warrant use of the procedure for the intended purpose under the standards of these guidelines.

Y. *Work behavior.* An activity performed to achieve the objectives of the job. Work behaviors involve observable (physical) components and unobservable (mental) components. A work behavior consists of the performance of one or more tasks. Knowledges, skills, and abilities are not behaviors, although they may be applied in work behaviors.

Appendix

17. *Policy statement on affirmative action* (see section 13B). The Equal Employment Opportunity Coordinating Council was established by act of Congress in 1972, and charged with responsibility for developing and implementing agreements and policies designed, among other things, to eliminate conflict and inconsistency among the agencies of the Federal Government responsible for administering Federal law prohibiting discrimination on grounds of race, color, sex, religion, and national origin. This statement is issued as an initial response to the requests of a number of State and local officials for clarification of the Government's policies concerning the role of affirmative action in the overall equal employment opportunity program. While the Coordinating Council's adoption of this statement expresses only the views of the signatory agencies concerning this important subject, the principles set forth below should serve as policy guidance for other Federal agencies as well.

(1) Equal employment opportunity is the law of the land. In the public sector of our society this means that all persons, regardless of race, color, religion, sex, or national origin shall have equal access to positions in the public service limited only by their ability to do the job. There is ample evidence in all sectors of our society that such equal access frequently has been denied to members of certain groups because of their sex, racial, or ethnic characteristics. The remedy for such past and present discrimination is twofold.

On the one hand, vigorous enforcement of the laws against discrimination is essential. But equally, and perhaps even more important are affirmative, voluntary efforts on the part of public employers to assure that positions in the public service are genuinely and equally accessible to qualified persons, without regard to their sex, racial, or ethnic characteristics. Without such efforts equal employment opportunity is no more than a wish. The importance of voluntary affirmative action on the part of employers is underscored by title VII of the Civil Rights Act of 1964, Executive Order 11246, and related laws and regulations—all of which emphasize voluntary action to achieve equal employment opportunity.

As with most management objectives, a systematic plan based on sound organizational analysis and problem identification is crucial to the accomplishment of affirmative action objectives. For this reason, the Council urges all State and local governments to develop and implement results oriented affirmative action plans which deal with the problems so identified.

The following paragraphs are intended to assist State and local governments by illustrating the kinds of analyses and activities which may be appropriate for a public employer's voluntary affirmative action plan. This statement does not address remedies imposed after a finding of unlawful discrimination.

(2) Voluntary affirmative action to assure equal employment opportunity is appropriate at any stage of the employment process. The first step in the construction of any affirmative action plan should be an analysis of the employer's work force to determine whether precentages of sex, race, or ethnic groups in individual job classifications are substantially similar to the precentages of those groups available in the relevant job market who possess the basic job-related qualifications.

When substantial disparities are found through such analyses, each element of the overall selection process should be examined to determine which elements operate to exclude persons on the basis of sex, race, or ethnic group. Such elements include, but are not limited to, recruitment, testing, ranking certification, interview, recommendations for selection, hiring, promotion, etc. The examination of each element of the selection process should at a minimum include a determination of its validity in predicting job performance.

(3) When an employer has reason to believe that its selection procedures have the exclusionary effect described in paragraph 2 above, it should initiate affirmative steps to remedy the situation. Such steps, which in design and execution may be race, color, sex, or ethnic "conscious," include, but are not limited to, the following:

(a) The establishment of a long-term goal, and short-range, interim goals and timetables for the specific job classifications, all of which should take into account the availability of basically qualified persons in the relevant job market;

(b) A recruitment program designed to attract qualified members of the group in question;

(c) A systematic effort to organize work and redesign jobs in ways that provide opportunities for persons lacking "journeyman" level knowledge or skills to enter and, with appropriate training, to progress in a career field;

(d) Revamping selection instruments or procedures which have not yet been validated in order to reduce or eliminate exclusionary effects on particular groups in particular job classifications;

(e) The initiation of measures designed to assure that members of the affected group who are qualified to perform the job are included within the pool of persons from which the selecting official makes the selection;

(f) A systematic effort to provide career advancement training, both classroom and on-the-job, to employees locked into dead end jobs; and

(g) The establishment of a system for regularly monitoring the effectiveness of the particular affirmative action program, and procedures for making timely adjustments in this program where effectiveness is not demonstrated.

(4) The goal of any affirmative action plan should be achievement of genuine equal employment opportunity for all qualified persons. Selection under such plans should be based upon the ability of the applicant(s) to do the work. Such plans should not require the selection of the unqualified, or the unneeded, nor should they require the selection of persons on the basis of race, color, sex, religion, or national origin. Moreover, while the Council believes that this statement should serve to assist State and local employers, as well as Federal agencies, it recognizes that affirmative action cannot be viewed as a standardized program which must be accomplished in the same way at all times in all places.

Accordingly, the Council has not attempted to set forth here either the minimum or maximum voluntary steps that employers may take to deal with their respective situations. Rather, the Council recognizes that under applicable authorities, State and local employers have flexibility to formulate affirmative action plans that are best suited

to their particular situations. In this manner, the Council believes that affirmative action programs will best serve the goal of equal employment opportunity.

Respectfully submitted,

Harold R. Tyler, Jr.,

Deputy Attorney General and Chairman of the Equal Employment Coordinating Council.

Michael H. Moskow,

Under Secretary of Labor.

Ethel Bent Walsh,

Acting Chairman, Equal Employment Opportunity Commission.

Robert E. Hampton,

Chairman, Civil Service Commission.

Arthur E. Flemming,

Chairman, Commission on Civil Rights.

Because of its equal employment opportunity responsibilities under the State and Local Government Fiscal Assistance Act of 1972 (the revenue sharing act), the Department of Treasury was invited to participate in the formulation of this policy statement; and it concurs and joins in the adoption of this policy statement.

Done this 26th day of August 1976.

Richard Albrecht,

General Counsel, Department of the Treasury.

Section 18. *Citations.* The official title of these guidelines is "Uniform Guidelines on Employee Selection Procedures (1978)". The Uniform Guidelines on Employee Selection Procedures (1978) are intended to establish a uniform Federal position in the area of prohibiting discrimination in employment practices on grounds of race, color, religion, sex, or national origin. These guidelines have been adopted by the Equal Employment Opportunity Commission, the Department of Labor, the Department of Justice, and the Civil Service Commission.

The official citation is:

"Section ——, Uniform Guidelines on Employee Selection Procedure (1978); 43 FR —— (August 25, 1978)."

The short form citation is:

"Section ——, U.G.E.S.P. (1978); 43 FR —— (August 25, 1978)."

When the guidelines are cited in connection with the activities of one of the issuing agencies, a specific citation to the regulations of that agency can be added at the end of the above citation. The specific additional citations are as follows:

Equal Employment Opportunity Commission
29 CFR Part 1607
Department of Labor
Office of Federal Contract Compliance Programs
41 CFR Part 60-3
Department of Justice
28 CFR 50.14
Civil Service Commission
5 CFR 300.103(c)

Normally when citing these guidelines, the section number immediately preceding the title of the guidelines will be from these guidelines series 1-18. If a section number from the codification for an individual agency is needed it can also be added at the end of the agency citation. For example, section 6A of these guidelines could be cited for EEOC as follows: "Section 6A, Uniform Guidelines on Employee Selection Procedures (1978); 43 FR ——, (August 25, 1978); 29 CFR Part 1607, section 6A."

Eleanor Holmes Norton,

Chair, Equal Employment Opportunity Commission.

Alan K. Campbell,

Chairman, Civil Service Commission.

Ray Marshall,

Secretary of Labor.

Griffin B. Bell,

Attorney General.

CIVIL SERVICE COMMISSION

Title 5—Administrative Personnel

CHAPTER 1—CIVIL SERVICE COMMISSION

PART 300—EMPLOYMENT (GENERAL)

Uniform Guidelines on Employee Selection Procedures (1978)

The Uniform Guidelines on Employee Selection Procedures (1978) which are printed at the beginning of this part IV in today's Federal Register are adopted by the Civil Service Commission, in conjunction with the Equal Employment Opportunity Commission, Department of Justice, and the Department of Labor to establish uniformity in prohibiting discrimination in employment practices on grounds of race, color, religion, sex, or national origin. Cross reference documents are published at 29 CFR parts 1607 (Equal Employment Opportunity Commission), 28 CFR 50.14 (Department of Justice), and 41 CFR 60-3 (Department of Labor) elsewhere in this issue of the Federal Register.

By virtue of the authority vested in it by sections 3301, 3302, 7151, 7154, and 7301 of title 5 and section 4763(b) of title 42, United States Code, and Executive Order 10577, 3 CFR 1954-58 comp. page 218 and Executive Order 11478, 3 CFR 1959 comp. 133, and section 717 of the Civil Rights Act of 1964, as amended (42 U.S.C. 2000e-16), the Civil Service Commission amends title 5, part 300, subpart A, § 300.103(c) of the Code of Federal Regulations to read as follows:

§ 300.103 Basic requirements.

"(c) Equal employment opportunity. An employment practice shall not discriminate on the basis of race, color, religion, sex, age, national origin, partisan political affiliation, or other nonmerit factor. Employee selection procedures shall meet the standards established by the "Uniform Guidelines on Employee Selection Procedures (1978), 43 FR—— (August 25, 1978)."

The Civil Service Commission rescinds the Guidelines on Employee Selection Procedures, 41 FR 51752, Federal Personnel Manual part 900, subpart F and adopts the Uniform Guidelines on Employee Selection Procedures (1978), to be issued as identical supplement appendices to supplements 271-1, Development of Qualification Standards; 271-2, Tests and Other Applicant Appraisal Procedures; 335-1, Evaluation of Employees for Promotion and Internal Placement; and 990-1 (Book III), part 900, subpart F, Administration of Standards for a Merit System of Personnel Administration of the Federal Personnel Manual in order to insure the examining, testing standards, and employment practices are not affected by discrimination on the basis of race, color, religion, sex or national origin.

Effective date: September 25, 1978.

Alan K. Campbell,

Chairman, Civil Service Commission.

DEPARTMENT OF JUSTICE

Title 28—Judicial Administration

CHAPTER 1—DEPARTMENT OF JUSTICE

PART 50—STATEMENTS OF POLICY

Uniform Guidelines on Employee Selection Procedures (1978)

The Uniform Guidelines on Employee Selection Procedures which are provided at the beginning of this part IV in today's Federal Register are adopted by the Department of Justice, in conjunction with the Civil Service Commission, Equal Employment Opportunity Commission, and the Department of Labor to establish a uniform Federal position in the area of prohibiting discrimination in employment practices on grounds of race, color, religion, sex, or national origin. Cross reference documents are published at 5 CFR 300.103(c), (Civil Service Commission) 29 CFR 1607 (Equal Employment Opportunity Commission), and 41 CFR 60-3 (Department of Labor), elsewhere in this issue of the Federal Register.

By virtue of the authority vested in me by 28 U.S.C. 509 and 5 U.S.C. 301, Sec. 50.14 of part 50 of chapter 1 of title 28 of the Code of Federal Regulations is amended by substituting the Uniform Guidelines on Employee Selection Procedures (1978) for part I through part IV.

Effective date: September 25, 1978.

Griffin B. Bell,

Attorney General.

EQUAL EMPLOYMENT OPPORTUNITY COMMISSION

Title 29—Labor

CHAPTER XIV—EQUAL EMPLOYMENT OPPORTUNITY COMMISSION

PART 1607—UNIFORM GUIDELINES ON EMPLOYEE SELECTION PROCEDURES (1978)

The Uniform Guidelines on Employee Selection Procedures which are printed at the beginning of this part IV in today's Federal Register are adopted by the Equal Employment Opportunity Commission, in conjunction with the Civil Service Commission, Department of Justice, and the Department of Labor to establish a uniform Federal position in the area of prohibiting discrimination in employment practices on grounds of race, color, religion, sex, or national origin. Cross reference documents are published at 5 CFR 300.103(c) (Civil Service Commission), 28 CFR 50.14 (Department of Justice) and 41 CFR 60-3 Department of Labor), elsewhere in this issue.

By virtue of the authority vested in it by sections 713 and 709 of title VII of the Civil Rights Act of 1964 (78 Stat. 265), as amended

by the Equal Employment Opportunity Act of 1972 (Pub. L. 92-261), (42 U.S.C. 2000e-12 and 2000e-8), the Equal Employment Opportunity Commission hereby revises part 1607 of chapter XIV of title 29 of the Code of Federal Regulations by rescinding the Guidelines on Employee Selection Procedures (see 35 FR 12333, August 1, 1970; and 41 FR 51984, November 24, 1976) and adopting the Uniform Guidelines on Employee Selection Procedures (1978) as a new part 1607.

Effective date: September 25, 1978.

Eleanor Holmes Norton,

Chair.

Table of Contents

General Principles

1607.1 Statement of Purpose
A. Need for Uniformity—Issuing Agencies
B. Purpose of Guidelines
C. Relation to Prior Guidelines
1607.2 Scope
A. Application of Guidelines
B. Employment Decisions
C. Selection Procedures
D. Limitations
E. Indian Preference Not Affected
1607.3 Discrimination Defined: Relationship Between Use of Selection Procedures and Discrimination
A. Procedure Having Adverse Impact Constitutes Discrimination Unless Justified
B. Consideration of Suitable Alternative Selection Procedures
1607.4 Information on Impact
A. Records Concerning Impact
B. Applicable Race, Sex, and Ethnic Groups for Recordkeeping
C. Evaluation of Selection Rates. The "Bottom Line"
D. Adverse Impact and the "Four-Fifths Rule"
E. Consideration of User's Equal Employment Opportunity Posture
1607.5 General Standards for Validity Studies
A. Acceptable Types of Validity Studies
B. Criterion-Related, Content, and Construct Validity
C. Guidelines Are Consistent With Professional Standards
D. Need for Documentation of Validity
E. Accuracy and Standardization
F. Caution Against Selection on Basis of Knowledges, Skills, or Abilities Learned in Brief Orientation Period
G. Method of Use of Selection Procedures
H. Cutoff Scores
I. Use of Selection Procedures for Higher Level Jobs
J. Interim Use of Selection Procedures
K. Review of Validity Studies for Cur- rency
1607.6 Use of Selection Procedures Which Have Not Been Validated
A. Use of Alternate Selection Procedures To Eliminate Adverse Impact
B. Where Validity Studies Cannot or Need Not Be Performed
(1) Where Informal or Unscored Procedures Are Used
(2) Where Formal and Scored Procedures Are Used
1607.7 Use of Other Validity Studies
A. Validity Studies Not Conducted by the User
B. Use of Criterion-Related Validity Evidence From Other Sources
(1) Validity Evidence
(2) Job Similarity
(3) Fairness Evidence
C. Validity Evidence From Multi-Unit Study
D. Other Significant Variables
1607.8 Cooperative Studies
A. Encouragement of Cooperative Studies
B. Standards for Use of Cooperative Studies
1607.9 No Assumption of Validity
A. Unacceptable Substitutes for Evidence of Validity
B. Encouragement of Professional Supervision
1607.10 Employment Agencies and Employment Services
A. Where Selection Procedures Are Devised by Agency
B. Where Selection Procedures Are Devised Elsewhere
1607.11 Disparate Treatment
1607.12 Retesting of Applicants
1607.13 Affirmative Action
A. Affirmative Action Obligations
B. Encouragement of Voluntary Affirmative Action Programs

Technical Standards

1607.14 Technical Standards for Validity Studies
A. Validity Studies Should Be Based on Review of Information About the Job
B. Technical Standards for Criterion-Related Validity Studies
(1) Technical Feasibility
(2) Analysis of the Job
(3) Criterion Measures
(4) Representativeness of the Sample
(5) Statistical Relationships
(6) Operational Use of Selection Procedures
(7) Over-Statement of Validity Findings
(8) Fairness
(a) Unfairness Defined
(b) Investigation of Fairness
(c) General Considerations in Fairness Investigations
(d) When Unfairness is Shown
(e) Technical Feasibility of Fairness Studies
(f) Continued Use of Selection Procedures When Fairness Studies Not Feasible
C. Technical Standards for Content Validity Studies
(1) Appropriateness of Content Validity Studies
(2) Job Analysis for Content Validity
(3) Development of Selection Procedure
(4) Standards for Demonstrating Content Validity
(5) Reliability
(6) Prior Training or Experience
(7) Training Success
(8) Operational Use
(9) Ranking Based on Content Validity Studies
D. Technical Standards for Construct Validity Studies
(1) Appropriateness of Construct Validity Studies
(2) Job Analysis Required in Construct Validity Studies
(3) Relationship to the Job
(4) Use of Construct Validity Study Without New Criterion-Related Evidence
(a) Standards for Use
(b) Determination of Common Work Behaviors

Documentation of Impact and Validity Evidence

1607.15 Documentation of Impact and Validity Evidence
A. Required Information
(1) Simplified Recordkeeping for Users With Less Than 100 Employees
(2) Information on Impact
(a) Collection of Information on Impact
(b) When Adverse Impact Has Been Eliminated in the Total Selection Process
(c) When Data Insufficient To Determine Impact
(3) Documentation of Validity Evidence
(a) Type of Evidence
(b) Form of Report
(c) Completeness
B. Criterion-Related Validity Studies
(1) User(s), Location(s), and Date(s) of Study
(2) Problem and Setting
(3) Job Analysis or Review of Job Information
(4) Job Titles and Codes
(5) Criterion Measures
(6) Sample Description
(7) Description of Selection Procedure
(8) Techniques and Results
(9) Alternative Procedures Investigated
(10) Uses and Applications
(11) Source Data
(12) Contact Person
(13) Accuracy and Completeness
C. Content Validity Studies
(1) User(s), Location(s), and Date(s) of Study
(2) Problem and Setting
(3) Job Analysis—Content of the Job
(4) Selection Procedure and Its Content
(5) Relationship Between Selection Procedure and the Job
(6) Alternative Procedures Investigated
(7) Uses and Applications
(8) Contact Person
(9) Accuracy and Completeness
D. Construct Validity Studies
(1) User(s), Location(s), and Date(s) of Study
(2) Problem and Setting
(3) Construct Definition
(4) Job Analysis
(5) Job Titles and Codes
(6) Selection Procedure
(7) Relationship to Job Performance
(8) Alternative Procedures Investigated
(9) Uses and Applications
(10) Accuracy and Completeness
(11) Source Data
(12) Contact Person
E. Evidence of Validity From Other Studies
(1) Evidence From Criterion-Related Validity Studies
(a) Job Information
(b) Relevance of Criteria
(c) Other Variables
(d) Use of the Selection Procedure
(e) Bibliography
(2) Evidence From Content Validity Studies
(3) Evidence From Construct Validity Studies
F. Evidence of Validity From Cooperative Studies
G. Selection for Higher Level Jobs
H. Interim Use of Selection Procedures

Definitions

1607.16 Definitions

Appendix

1607.17 Policy Statement on Affirmative Action (see section 13B)
1607.18 Citations

DEPARTMENT OF LABOR

Title 41—Public Contracts and Property Management

CHAPTER 60—OFFICE OF FEDERAL CONTRACT COMPLIANCE PROGRAMS, DEPARTMENT OF LABOR

PART 60-3—UNIFORM GUIDELINES ON EMPLOYEE SELECTION PROCEDURES (1978)

The Uniform Guidelines on Employee Selection Procedures which are printed at the beginning of this part IV of today's Federal Register are adopted by the Department of Labor, in conjunction with the Civil Service Commission, Department of Justice, and the Equal Employment Opportunity Commission to establish a uniform Federal position in the area of prohibiting discrimination in employment practices on grounds of race, color, religion, sex, or national origin. Cross reference documents are published at 5 CFR 300.103(c) (Civil Service Commission), 28 CFR 50.14 (Department of Justice) and 29 CFR 1607 (Equal Employment Opportunity Commission), elsewhere in this issue of the Federal Register.

By virtue of the authority of sections 201, 202, 203, 203(a), 205, 206(a), 301, 303(b), and 403(b) of Executive Order 11246, as amended, 30 FR 12319; 32 FR 14303; section 60-1.2 of part 60-1 of 41 CFR chapter 60, and section 715 of the Civil Rights Act of 1964, as amended (42 U.S.C. 2000e-14), part 60-3 of chapter 60 of title 41 of the Code of Federal Regulations is revised by rescinding the Guidelines on Employee Selection Procedures (see 41 FR 51744, November 23, 1976) and adopting the Uniform Guidelines on Employee Selection Procedures (1978) as a new part 60-3.

Effective date: September 25, 1978.

Ray Marshall,

Secretary of Labor.

Table of Contents

General Principles

60-3.1 Statement of Purpose
A. Need for Uniformity—Issuing Agencies
B. Purpose of Guidelines
C. Relation to Prior Guidelines
60-3.2 Scope
A. Application of Guidelines
B. Employment Decisions
C. Selection Procedures
D. Limitations
E. Indian Preference Not Affected
60-3.3 Discrimination Defined: Relationship Between Use of Selection Procedures and Discrimination
A. Procedure Having Adverse Impact Constitutes Discrimination Unless Justified
B. Consideration of Suitable Alternative Selection Procedures
60-3.4 Information on Impact
A. Records Concerning Impact
B. Applicable Race, Sex, and Ethnic Groups for Recordkeeping
C. Evaluation of Selection Rates. The "Bottom Line"
D. Adverse Impact and the "Four-Fifths Rule"
E. Consideration of User's Equal Employment Opportunity Posture
60-3.5 General Standards for Validity Studies
A. Acceptable Types of Validity Studies
B. Criterion-Related, Content, and Construct Validity
C. Guidelines Are Consistent With Professional Standards
D. Need for Documentation of Validity
E. Accuracy and Standardization
F. Caution Against Selection on Basis of Knowledges, Skills, or Abilities Learned in Brief Orientation Period
G. Method of Use of Selection Procedures
H. Cutoff Scores
I. Use of Selection Procedures for Higher Level Jobs
J. Interim Use of Selection Procedures
K. Review of Validity Studies for Currency
60-3.6 Use of Selection Procedures Which Have Not Been Validated
A. Use of Alternate Selection Procedures To Eliminate Adverse Impact
B. Where Validity Studies Cannot or Need Not Be Performed
(1) Where Informal or Unscored Procedures Are Used
(2) Where Formal and Scored Procedures Are Used
60-3.7 Use of Other Validity Studies
A. Validity Studies Not Conducted by the User
B. Use of Criterion-Related Validity Evidence From Other Sources
(1) Validity Evidence
(2) Job Similarity
(3) Fairness Evidence
C. Validity Evidence From Multiunit Study
D. Other Significant Variables
60-3.8 Cooperative Studies
A. Encouragement of Cooperative Studies
B. Standards for Use of Cooperative Studies
60-3.9 No Assumption of Validity
A. Unacceptable Substitutes for Evidence of Validity
B. Encouragement of Professional Supervision
60-3.10 Employment Agencies and Employment Services
A. Where Selection Procedures Are Devised by Agency
B. Where Selection Procedures Are Devised Elsewhere
60-3.11 Disparate Treatment
60-3.12 Retesting of Applicants
60-3.13 Affirmative Action
A. Affirmative Action Obligations
B. Encouragement of Voluntary Affirmative Action Programs

Technical Standards

60-3.14 Technical Standards for Validity Studies
A. Validity Studies Should be Based on Review of Information About the Job
B. Technical Standards for Criterion-Related Validity Studies
(1) Technical Feasibility
(2) Analysis of the Job
(3) Criterion Measures
(4) Representativeness of the Sample
(5) Statistical Relationships
(6) Operational Use of Selection Procedures
(7) Over-Statement of Validity Findings
(8) Fairness
(a) Unfairness Defined
(b) Investigation of Fairness
(c) General Considerations in Fairness Investigations
(d) When Unfairness Is Shown
(e) Technical Feasibility of Fairness Studies
(f) Continued Use of Selection Procedures When Fairness Studies not Feasible
C. Technical Standards for Content Validity Studies
(1) Appropriateness of Content Validity Studies
(2) Job Analysis for Content Validity
(3) Development of Selection Procedure
(4) Standards for Demonstrating Content Validity
(5) Reliability
(6) Prior Training or Experience
(7) Training Success
(8) Operational Use
(9) Ranking Based on Content Validity Studies
D. Technical Standards for Construct Validity Studies
(1) Appropriateness of Construct Validity Studies
(2) Job Analysis for Construct Validity Studies
(3) Relationship to the Job
(4) Use of Construct Validity Study Without New Criterion-Related Evidence
(a) Standards for Use
(b) Determination of Common Work Behaviors

Documentation of Impact and Validity Evidence

60-3.15 Documentation of Impact and Validity Evidence
A. Required Information
(1) Simplified Recordkeeping for Users With Less Than 100 Employees
(2) Information on Impact
(a) Collection of Information on Impact
(b) When Adverse Impact Has Been Eliminated in the Total Selection Process
(c) When Data Insufficient to Determine Impact
(3) Documentation of Validity Evidence
(a) Type of Evidence
(b) Form of Report
(c) Completeness
B. Criterion-Related Validity Studies
(1) User(s), Location(s), and Date(s) of Study
(2) Problem and Setting
(3) Job analysis or Review of Job Information
(4) Job Titles and Codes
(5) Criterion Measures
(6) Sample Description
(7) Description of Selection Procedure
(8) Techniques and Results
(9) Alternative Procedures Investigated
(10) Uses and Applications
(11) Source Data
(12) Contact Person
(13) Accuracy and Completeness
C. Content Validity Studies
(1) User(s), Location(s), and Date(s) of Study
(2) Problem and Setting
(3) Job Analysis—Content of the Job
(4) Selection Procedure and Its Content
(5) Relationship Between Selection Procedure and the Job
(6) Alternative Procedures Investigated
(7) Uses and Applications
(8) Contact Person
(9) Accuracy and Completeness
D. Construct Validity Studies
(1) User(s), Location(s), and Date(s) of Study
(2) Problem and Setting

(3) Construct Definition
(4) Job Analysis
(5) Job Titles and Codes
(6) Selection Procedure
(7) Relationship to Job Performance
(8) Alternative Procedures Investigated
(9) Uses and Applications
(10) Accuracy and Completeness
(11) Source Data
(12) Contact Person
E. Evidence of Validity From Other Studies
(1) Evidence From Criterion-Related Validity Studies
(a) Job Information
(b) Relevance of Criteria
(c) Other Variables
(d) Use of the Selection Procedure
(e) Bibliography
(2) Evidence From Content Validity Studies
(3) Evidence From Construct Validity Studies
F. Evidence of Validity From Cooperative Studies
G. Selection for Higher Level Jobs
H. Interim Use of Selection Procedures

Definitions

60-3.16 Definitions

Appendix

60-3.17 Policy Statement on Affirmative Action (see section 13B)
60-3.18 Citations

Appendix B

(From the Federal Register of Friday, April 20, 1979.)

EQUAL EMPLOYMENT OPPORTUNITY COMMISSION

29 CFR Part 1604

Guidelines on Sex Discrimination; Adoption of Final Interpretive Guidelines; Question and Answers

AGENCY: Equal Employment Opportunity Commission.

ACTION: Final Amendments to Guidelines on Discrimination Because of Sex, and Addition of Questions and Answers concerning the Pregnancy Discrimination Act, Public Law 95-555, 92 Stat. 2076 (1978).

SUMMARY: On October 31, 1978, President Carter signed into law the Pregnancy Discrimination Act, Pub. L. 95-555, 92 Stat. 2076, as an amendment to Title VII of the Civil Rights Act of 1964, as amended. The act makes clear that discrimination on the basis of pregnancy, childbirth or related medical conditions constitutes unlawful sex discrimination under Title VII. The amendments to the Equal Employment Opportunity Commission's Guidelines on Discrimination Because of Sex bring the Guidelines into conformity with Pub. L. 95-555. The accompanying questions and answers respond to concerns raised by the public about compliance with the Pregnancy Discrimination Act.

EFFECTIVE DATE: April 20, 1979.

FOR FURTHER INFORMATION CONTACT: Peter C. Robertson, Director, Office of Policy Implementation, Room 4002A, Equal Employment Opportunity Commission, 2401 E Street, N.W., Washington, D.C. 20506, (202) 634-7060.

SUPPLEMENTARY INFORMATION: The Pregnancy Discrimination Act makes clear that Title VII of the Civil Rights Act of 1964, as amended, forbids discrimination on the basis of pregnancy, childbirth and related medical conditions. As reflected in the Committee Reports (Senate Report 95-331, 95th Cong., 1st Session (1977) and House of Representatives Report 95-948, 95th Cong. 2d Session (1978)), Congress believed that the Equal Employment Opportunity Commission (EEOC or the Commission), in its Guidelines on Discrimination Because of Sex (29 CFR Part 1604, published at 39 FR 6836, April 5, 1972) had "rightly implemented the Title VII prohibition of sex discrimination in the 1964 act." H.R. 95-948 at p. 2.

Contrary to the EEOC's Guidelines and rulings by eighteen District Courts and all seven Courts of Appeal which faced the issue, in *General Electric Co.* v. *Gilbert*, 429 U.S. 125 (1976), the Supreme Court ruled that General Electric's exclusion of pregnancy related disabilities from its comprehensive disability plan did not violate Title VII. The Supreme Court further indicated that it believed that the EEOC Guidelines located at 29 CFR 1604.10(b) incorrectly interpreted the Congressional intent in the statute.

The Pregnancy Discrimination Act reaffirms EEOC's Guidelines with but minor modifications. For that reason, the Commission believed that only slight modifications of its Guidelines were necessary and issued them on an interim basis on March 9, 1979 at 44 FR 13278. Along with these amended Sex Discrimination Guidelines, the Commission published a list of questions and answers concerning the Pregnancy Discrimination Act. These responded to urgent concerns raised by employees, employers, unions and insurers who sought the Commission's guidance in understanding their rights and obligations under the Pregnancy Discrimination Act.

Fringe benefit programs subject to Title VII which existed on October 31, 1978, must be modified in accordance with the Pregnancy Discrimination Act no later than April 29, 1979. It is the Commission's desire, therefore, that all interested parties be made aware of EEOC's view of their rights and obligations in advance of April 29, 1979, so that they may be in compliance by that date. For that reason, the Commission has determined that the amendment to 29 CFR 1604.10 and the questions and answers, which will be appended to 29 CFR Part 1604, are not subject to the requirements of Executive Order 12044. See section 6(b)(6) of Executive Order 12044.

The Commission, however, invited and received comments from the public and affected Federal agencies. The Commission has considered the comments and determined that its Sex Discrimination Guidelines at 29 CFR 1604.10 should be issued in final form as they were published in 44 FR 13278 (March 9, 1979), except that the word "opportunities" has been inserted in Subsection (a) of Section 1604.10 to emphasize that this subsection applies to all employment-related policies or practices, since there was apparent confusion on this point. Also as a result of the comments, the Commission has added several questions and answers which will be of further assistance to those seeking Commission guidance with respect to their rights and obligations under the Pregnancy Discrimination Act, and has amended two of the originally published questions and answers.

Question 21 was amended by changing the second paragraph of the answer to read "non-spouse dependents" instead of "other dependents", to clarify the intent of the answers. Question 30 (now question 34) has been amended to include women who are contemplating an abortion within the prohibition against discrimination on the basis of abortion.

Questions 29 and 30 were added to address many of the concerns which had been raised with respect to "extended benefits" provisions.

Question 18(A) was added in response to questions and comments which pertain to child care leave.

A majority of the comments questioned the appropriateness of the Commission's answer to Question 21 of the questions and answers at 44 FR 13278. Question 21 asked whether an employer has to make available health insurance coverage for the medical expenses of pregnancy-related conditions of the spouses of male employees and of the non-spouse dependents of all employees.

The Commission concluded that health insurance benefits for the pregnancy-related conditions of the male employee's spouse must be available to the same extent as health insurance benefits are available to the female employee's spouse. The pregnancy-related conditions of non-spouse dependents, however, would not have to be covered under the health insurance program so long as that practice applied to the non-spouse dependents of male and female employees equally.

The Pregnancy Discrimination Act amends Title VII of the Civil Rights Act of 1964, as amended. To the extent that a specific question is not directly answered by a reading of the Pregnancy Discrimination Act, existing principles of Title VII must be applied to resolve that question. The legislative history of the Pregnancy Discrimination Act states explicitly that existing principles of Title VII law would have to be applied to resolve the question of benefits for dependents: (S. Rep. No. 95-331 at 6.)

The Commission, being responsible for interpreting and implementing Title VII, utilized Title VII principles to arrive at the position reached on the dependent question.

The underlying principle of Title VII is that applicants for employment or employees be treated equally without regard to their race, sex, color, religion, or national origin. This equality of treatment encompasses the receiving of fringe benefits made available in connection with employment. Title VII does not require employers to provide the same coverage for the pregnancy-related medical conditions of spouses of male employees as it provides for the pregnancy-related costs of its female employees. However, if an employer makes available to female employees insurance which covers the costs of all of the medical conditions of their spouses, but provides male employees with insurance coverage for only *some* of the medical

conditions (i.e., all but pregnancy-related expenses) of their spouses, male employees are receiving a less favorable fringe benefit package. This view was explicitly supported in the Senate by Senators Bayh and Cranston, 123 Cong. Rec. S15037, S15058 (daily ed. Sept. 16, 1977), and not specifically opposed.

Absent a state statute to the contrary, it would not be a violation of Title VII if an employer's health insurance policy denied pregnancy benefits for the other dependents of employees (e.g. daughters) so long as the exclusion applied equally to non-spouse dependents of male employees and non-spouse dependents of female employees. Since male and female employees have an equal chance of having pregnant dependent daughters, male and female employees would be equally affected by such an exclusion.

Although costs may increase as a result of providing pregnancy benefits for the spouses of male employees where benefits are made available for the spouses of female employees, the Pregnancy Discrimination Act provides that where costs were apportioned on the date of enactment between employers and employees, any payments or contributions required to comply with the Act may be made by employers and employees in the same proportion, if that apportionment was non-discriminatory.

As a result of the many comments and questions raised on the dependent question, questions 22 and 23 were added to provide additional guidance to interested parties.

With the exception of the addition of questions 18(A), 22, 23, 29, and 30, and the amendments to questions 21 and 30 (now 34); the questions and answers are issued in final form as they were published in 44 FR 13278 (March 9, 1979).

By virtue of the authority vested in it by Section 713 of Title VII of the Civil Rights Act, as amended, 42 U.S.C. 2000-12, 78 Stat. 265, the Equal Employment Opportunity Commission hereby approves as final § 1604.10 and adopts questions and answers concerning the Pregnancy Discrimination Act, Pub. L. 95-555, 92 Stat. 2076 (1978), as an appendix to Part 1604 of Title 29 of the Code of Federal Regulations as set forth below.

Signed at Washington, D.C., this 17th day of April, 1979.

Eleanor H. Norton,

Chair, Equal Employment Opportunity Commission.

1. 29 CFR 1604.10 is amended to read as follows:

§ 1604.10 Employment policies relating to pregnancy and childbirth.

(a) A written or unwritten employment policy or practice which excludes from employment opportunities applicants or employees because of pregnancy, childbirth or related medical conditions is in prima facie violation of Title VII.

(b) Disabilities caused or contributed to by pregnancy, childbirth, or related medical conditions, for all job-related purposes, shall be treated the same as disabilities caused or contributed to by other medical conditions, under any health or disability insurance or sick leave plan available in connection with employment. Written or unwritten employment policies and practices involving matters such as the commencement and duration of leave, the availability of extensions, the accrual of seniority and other benefits and privileges, reinstatement, and payment under any health or disability insurance or sick leave plan, formal or informal, shall be applied to disability due to pregnancy, childbirth, or related medical conditions on the same terms and conditions as they are applied to other disabilities. Health insurance benefits for abortion, except where the life of the mother would be endangered if the fetus were carried to term or where medical complications have arisen from an abortion, are not required to be paid by an employer; nothing herein, however, precludes an employer from providing abortion benefits or otherwise affects bargaining agreements in regard to abortion.

(c) Where the termination of an employee who is temporarily disabled is caused by an employment policy under which insufficient or no leave is available, such a termination violates the Act if it has a disparate impact on employees of one sex and is not justified by business necessity.

(d)(1) Any fringe benefit program, or fund, or insurance program which is in effect on October 31, 1978, which does not treat women affected by pregnancy, childbirth, or related medical conditions the same as other persons not so affected but similar in their ability or inability to work, must be in compliance with the provisions of § 1604.10(b) by April 29, 1979. In order to come into compliance with the provisions of § 1604.10(b), there can be no reduction of benefits or compensation which were in effect on October 31, 1978, before October 31, 1979 or the expiration of a collective bargaining agreement in effect on October 31, 1978, whichever is later.

(2) Any fringe benefit program implemented after October 31, 1978, must comply with the provisions of § 1604.10(b) upon implementation.

2. The following questions and answers, with an introduction, are added to 29 CFR Part 1604 as an appendix:

Questions and Answers on the Pregnancy Discrimination Act, Pub. L. 95-555, 92 Stat. 2076 (1978)

Introduction

On October 31, 1978, President Carter signed into law the *Pregnancy Discrimination Act* (Pub. L. 95-955). The Act is an amendment to Title VII of the Civil Rights Act of 1964 which prohibits, among other things, discrimination in employment on the basis of sex. The *Pregnancy Discrimination Act* makes it clear that "because of sex" or "on the basis of sex", as used in Title VII, includes "because of or on the basis of pregnancy, childbirth or related medical conditions." Therefore, Title VII prohibits discrimination in employment against women affected by pregnancy or related conditions.

The basic principle of the Act is that women affected by pregnancy and related conditions must be treated the same as other applicants and employees on the basis of their ability or inability to work. A woman is therefore protected against such practices as being fired, or refused a job or promotion, merely because she is pregnant or has had an abortion. She usually cannot be forced to go on leave as long as she can still work. If other employees who take disability leave are entitled to get their jobs back when they are able to work again, so are women who have been unable to work because of pregnancy.

In the area of fringe benefits, such as disability benefits, sick leave and health insurance, the same principle applies. A woman unable to work for pregnancy-related reasons is entitled to disability benefits or sick leave on the same basis as employees unable to work for other medical reasons. Also, any health insurance provided must cover expenses for pregnancy-related conditions on the same basis as expenses for other medical conditions. However, health insurance for expenses arising from abortion is not required except where the life of the mother would be endangered if the fetus were carried to term, or where medical complications have arisen from an abortion.

Some questions and answers about the *Pregnancy Discrimination Act* follow. Although the questions and answers often use only the term "employer," the Act—and these questions and answers—apply also to unions and other entities covered by Title VII.

1. Q. What is the effective date of the Pregnancy Discrimination Act?

A. The Act became effective on October 31, 1978, except that with respect to fringe benefit programs in effect on that date, the Act will take effect 180 days thereafter, that is, April 29, 1979.

To the extent that Title VII already required employers to treat persons affected by pregnancy-related conditions the same as persons affected by other medical conditions, the Act does not change employee rights arising prior to October 31, 1978, or April 29, 1979. Most employment practices relating to pregnancy, childbirth and related conditions—whether concerning fringe benefits or other practices—were already controlled by Title VII prior to this Act. For example, Title VII has always prohibited an employer from firing, or refusing to hire or promote, a woman because of pregnancy or related conditions, and from failing to accord a woman on pregnancy-related leave the same seniority retention and accrual accorded those on other disability leaves.

2. Q. If an employer had a sick leave policy in effect on October 31, 1978, by what date must the employer bring its policy into compliance with the Act?

A. With respect to payment of benefits, an employer has until April 29, 1979, to bring into compliance any fringe benefit or insurance program, including a sick leave policy, which was in effect on October 31, 1978. However, any such policy or program created after October 31, 1978, must be in compliance when created.

With respect to all aspects of sick leave policy other than payment of benefits, such as the terms governing retention and accrual of seniority, credit for vacation, and resumption of former job on return from sick leave, equality of treatment was required by Title VII without the Amendment.

3. Q. Must an employer provide benefits for pregnancy-related conditions to an employee

whose pregnancy begins prior to April 29, 1979, and continues beyond that date?

A. As of April 29, 1979, the effective date of the Act's requirements, an employer must provide the same benefits for pregnancy-related conditions as it provides for other conditions, regardless of when the pregnancy began. Thus, disability benefits must be paid for all absences on or after April 29, 1979, resulting from pregnancy-related temporary disabilities to the same extent as they are paid for absences resulting from other temporary disabilities. For example, if an employee gives birth before April 29, 1979, but is still unable to work on or after that date, she is entitled to the same disability benefits available to other employees. Similarily, medical insurance benefits must be paid for pregnancy-related expenses incurred on or after April 29, 1979.

If an employer requires an employee to be employed for a predetermined period prior to being eligible for insurance coverage, the period prior to April 29, 1979, during which a pregnant employee has been employed must be credited toward the eligibility waiting period on the same basis as for any other employee.

As to any programs instituted for the first time after October 31, 1978, coverage for pregnancy-related conditions must be provided in the same manner as for other medical conditions.

4. Q. Would the answer to the preceding question be the same if the employee became pregnant prior to October 31, 1978?

A. Yes.

5. Q. If, for pregnancy-related reasons, an employee is unable to perform the functions of her job, does the employer have to provide her an alternative job?

A. An employer is required to treat an employee temporarily unable to perform the functions of her job because of her pregnancy-related condition in the same manner as it treats other temporarily disabled employees, whether by providing modified tasks, alternative assignments, disability leaves, leaves without pay, etc. For example, a woman's primary job function may be the operation of a machine, and, incidental to that function, she may carry materials to and from the machine. If other employees temporarily unable to lift are relieved of these functions, pregnant employees also unable to lift must be temporarily relieved of the function.

6. Q. What procedures may an employer use to determine whether to place on leave as unable to work a pregnant employee who claims she is able to work or deny leave to a pregnant employee who claims that she is disabled from work?

A. An employer may not single out pregnancy-related conditions for special procedures for determining an employee's ability to work. However, an employer may use any procedure used to determine the ability of all employees to work. For example, if an employer requires its employees to submit a doctor's statement concerning their inability to work before granting leave or paying sick benefits, the employer may require employees affected by pregnancy-related conditions to submit such statements. Similarly, if an employer allows its employees to obtain doctor's statements from their personal physicians for absences due to other disabilities or return dates from other disabilities it must accept doctor's statements from personal physicians for absences and return dates connected with pregnancy-related disabilities.

7. Q. Can an employer have a rule which prohibits an employee from returning to work for a predetermined length of time after childbirth?

A. No.

8. Q. If an employee has been absent from work as a result of a pregnancy-related condition and recovers, may her employer require her to remain on leave until after her baby is born?

A. No. An employee must be permitted to work at all times during pregnancy when she is able to perform her job.

9. Q. Must an employer hold open the job of an employee who is absent on leave because she is temporarily disabled by pregnancy-related conditions?

A. Unless the employee on leave has informed the employer that she does not intend to return to work, her job must be held open for her return on the same basis as jobs are help open for employees on sick or disability leave for other reasons.

10. Q. May an employer's policy concerning the accrual and crediting of seniority during absences for medical conditions be different for employees affected by pregnancy-related conditions than for other employees?

A. No. An employer's seniority policy must be the same for employees absent for pregnancy-related reasons as for those absent for other medical reasons.

11. Q. For purposes of calculating such matters as vacations and pay increases, may an employer credit time spent on leave for pregnancy-related reasons differently than time spent on leave for other reasons?

A. No. An employer's policy with respect to crediting time for the purpose of calculating such matters as vacations and pay increases cannot treat employees on leave for pregnancy-related reasons less favorably than employees on leave for other reasons. For example, if employees on leave for medical reasons are credited with the time spent on leave when computing entitlement to vacation or pay raises, an employee on leave for pregnancy-related disability is entitled to the same kind of time credit.

12. Q. Must an employer hire a woman who is medically unable, because of a pregnancy-related condition, to perform a necessary function of a job?

A. An employer cannot refuse to hire a woman because of her pregnancy-related condition so long as she is able to perform the major functions necessary to the job. Nor can an employer refuse to hire her because of its preferences against pregnant workers or the preferences of co-workers, clients, or customers.

13. Q. May an employer limit disability benefits for pregnancy-related conditions to married employees?

A. No.

14. Q. If an employer has an all female workforce or job classification, must benefits be provided for pregnancy-related conditions?

A. Yes. If benefits are provided for other conditions, they must also be provided for pregnancy-related conditions.

15. Q. For what length of time must an employee who provides income maintenance benefits for temporary disabilities provide such benefits for pregnancy-related disabilities?

A. Benefits should be provided for as long as the employee is unable to work for medical reasons unless some other limitation is set for all other temporary disabilities, in which case pregnancy-related disabilities should be treated the same as other temporary disabilities.

16. Q. Must an employer who provides benefits for long-term or permanent disabilities provide such bnefits for pregnancy-related conditions?

A. Yes. Benefits for long term or permanent disabilities resulting from pregnancy-related conditions must be provided to the same extent that such benefits are provided for other conditions which result in long term or permanent disability.

17. Q. If an employer provides benefits to employees on leave, such as installment purchase disability insurance, payment of premiums for health, life or other insurance, continued payments into pension, saving or profit sharing plans, must the same benefits be provided for those on leave for pregnancy-related conditions?

A. Yes, the employer must provide the same benefits for those on leave for pregnancy-related conditions as for those on leave for other reasons.

18. Q. Can an employee who is absent due to a pregnancy-related disability be required to exhaust vacation benefits before receiving sick leave pay or disability benefits?

A. No. If employees who are absent because of other disabling causes receive sick leave pay or disability benefits without any requirement that they first exhaust vacation benefits, the employer cannot impose this requirement on an employee absent for a pregnancy-related cause.

18(A). Q. Must an employer grant leave to a female employee for childcare purposes after she is medically able to return to work following leave necessitated by pregnancy, childbirth or related medical conditions?

A. While leave for childcare purposes is not covered by the Pregnancy Discrimination Act, ordinary Title VII principles would require that leave for childcare purposes be granted on the same basis as leave which is granted to employees for other non-medical reasons. For example, if an employer allows its employees to take leave without pay or accrued annual leave for travel or education which is not job related, the same type of leave must be granted to those who wish to remain on leave for infant care, even though they are medically able to return to work.

19. Q. If state law requires an employer to provide disability insurance for a specified period before and after childbirth, does compliance with the state law fulfill the employer's obligation under the Pregnancy Discrimination Act?

A. Not necessarily. It is an employer's obligation to treat employees temporarily disabled by pregnancy in the same manner as employees affected by other temporary

disabilities. Therefore, any restrictions imposed by state law on benefits for pregnancy-related disabilities, but not for other disabilities, do not excuse the employer from treating the individuals in both groups of employees the same. If, for example, a state law requires an employer to pay a maximum of 26 weeks benefits for disabilities other than pregnancy-related ones but only six weeks for pregnancy-related disabilities, the employer must provide benefits for the additional weeks to an employee disabled by pregnancy-related conditions, up to the maximum provided other disabled employees.

20. Q. If a State or local government provides its own employees income maintenance benefits for disabilities, may it provide different benefits for disabilities arising from pregnancy-related conditions than for disabilities arising from other conditions?

A. No. State and local governments, as employers, are subject to the Pregnancy Discrimination Act in the same way as private employers and must bring their employment practices and programs into compliance with the Act, including disability and health insurance programs.

21. Q. Must an employer provide health insurance coverage for the medical expenses of pregnancy-related conditions of the spouses of male employees? Of the dependents of all employees?

A. Where an employer provides no coverage for dependents, the employer is not required to institute such coverage. However, if an employer's insurance program covers the medical expenses of spouses of female employees, then it must equally cover the medical expenses of spouses of male employees, including those arising from pregnancy-related conditions.

But the insurance does not have to cover the pregnancy-related conditions of non-spouse dependents as long as it excludes the pregnancy-related conditions of such non-spouse dependents of male and female employees equally.

22. Q. Must an employer provide the same level of health insurance coverage for the pregnancy-related medical conditions of the spouses of male employees as it provides for its female employees?

A. No. It is not necessary to provide the same level of coverage for the pregnancy-related medical conditions of spouses of male employees as for female employees. However, where the employer provides coverage for the medical conditions of the spouses of its employees, then the level of coverage for pregnancy-related medical conditions of the spouses of male employees must be the same as the level of coverage for all other medical conditions of the spouses of female employees. For example, if the employer covers employees for 100 percent of reasonable and customary expenses sustained for a medical condition, but only covers dependent spouses for 50 percent of reasonable and customary expenses for their medical conditions, the pregnancy-related expenses of the male employee's spouse must be covered at the 50 percent level.

23. Q. May an employer offer optional dependent coverage which excludes pregnancy-related medical conditions or offers less coverage for pregnancy-related medical conditions where the total premium for the optional coverage is paid by the employee?

A. No. Pregnancy-related medical conditions must be treated the same as other medical conditions under any health or disability insurance or sick leave plan *available in connection with employment*, regardless of who pays the premiums.

24. Q. Where an employer provides its employees a choice among several health insurance plans, must coverage for pregnancy-related conditions be offered in all of the plans?

A. Yes. Each of the plans must cover pregnancy-related conditions. For example, an employee with a single coverage policy cannot be forced to purchase a more expensive family coverage policy in order to receive coverage for her own pregnancy-related condition.

25. Q. On what basis should an employee be reimbursed for medical expenses arising from pregnancy, childbirth or related conditions?

A. Pregnancy-related expenses should be reimbursed in the same manner as are expenses incurred for other medical conditions. Therefore, whether a plan reimburses the employees on a fixed basis, or a percentage of reasonable and customary charge basis, the same basis should be used for reimbursement of expenses incurred for pregnancy-related conditions. Furthermore, if medical costs for pregnancy-related conditions increase, reevaluation of the reimbursement level should be conducted in the same manner as are cost reevaluations of increases for other medical conditions.

Coverage provided by a health insurance program for other conditions must be provided for pregnancy-related conditions. For example, if a plan provides major medical coverage, pregnancy-related conditions must be so covered. Similarly, if a plan covers the cost of a private room for other conditions, the plan must cover the cost of a private room for pregnancy-related conditions. Finally, where a health insurance plan covers office visits to physicians, pre-natal and post-natal visits must be included in such coverage.

26. Q. May an employer limit payment of costs for pregnancy-related medical conditions to a specified dollar amount set forth in an insurance policy, collective bargaining agreement or other statement of benefits to which an employee is entitled?

A. The amounts payable for the costs incurred for pregnancy-related conditions can be limited only to the same extent as are costs for other conditions. Maximum recoverable dollar amounts may be specified for pregnancy-related conditions if such amounts are similarly specified for other conditions, and so long as the specified amounts in all instances cover the same proportion of actual costs. If, in addition to the scheduled amount for other procedures, additional costs are paid for, either directly or indirectly, by the employer, such additional payments must also be paid for pregnancy-related procedures.

27. Q. May an employer impose a different deductible for payment of costs for pregnancy-related medical conditions than for costs of other medical conditions?

A. No. Neither an additional deductible, an increase in the usual deductible, nor a larger deductible can be imposed for coverage for pregnancy-related medical costs, whether as a condition for inclusion of pregnancy-related costs in the policy or for payment of the costs when incurred. Thus, if pregnancy-related costs are the first incurred under the policy, the employee is required to pay only the same deductible as would otherwise be required had other medical costs been the first incurred. Once this deductible has been paid, no additional deductible can be required for other medical procedures. If the usual deductible has already been paid for other medical procedures, no additional deductible can be required when pregnancy-related costs are later incurred.

28. Q. If a health insurance plan excludes the payment of benefits for any conditions existing at the time the insured's coverage becomes effective (pre-existing condition clause), can benefits be denied for medical costs arising from a pregnancy existing at the time the coverage became effective?

A. Yes. However, such benefits cannot be denied unless the pre-existing condition clause also excludes benefits for other pre-existing conditions in the same way.

29. Q. If an employer's insurance plan provides benefits after the insured's employment has ended (i.e. extended benefits) for costs connected with pregnancy and delivery where conception occurred while the insured was working for the employer, but not for the costs of any other medical condition which began prior to termination of employment, may an employer (a) continue to pay these extended benefits for pregnancy-related medical conditions but not for other medical conditions, or (b) terminate these benefits for pregnancy-related conditions?

A. Where a health insurance plan currently provides extended benefits for other medical conditions on a less favorable basis than for pregnancy-related medical conditions, extended benefits must be provided for other medical conditions on the same basis as for pregnancy-related medical conditions. Therefore, an employer can neither continue to provide less benefits for other medical conditions nor reduce benefits currently paid for pregnancy-related medical conditions.

30. Q. Where an employer's health insurance plan currently requires total disability as a prerequisite for payment of extended benefits for other medical conditions but not for pregnancy-related costs, may the employer now require total disability for payment of benefits for pregnancy-related medical conditions as well?

A. Since extended benefits cannot be reduced in order to come into compliance with the Act, a more stringent prerequisite for payment of extended benefits for pregnancy-related medical conditions, such as a requirement for total disability, cannot be imposed. Thus, in this instance, in order to comply with the Act, the employer must treat other medical conditions as pregnancy-related conditions are treated.

31. Q. Can the added cost of bringing benefit plans into compliance with the Act be

apportioned between the employer and employee?

A. The added cost, if any, can be apportioned between the employer and employee in the same proportion that the cost of the fringe benefit plan was apportioned on October 31, 1978, if that apportionment was nondiscriminatory. If the costs were not apportioned on October 31, 1978, they may not be apportioned in order to come into compliance with the Act. However, in no circumstance may male or female employees be required to pay unequal apportionments on the basis of sex or pregnancy.

32. Q. In order to come into compliance with the Act, may an employer reduce benefits or compensation?

A. In order to come into compliance with the Act, benefits or compensation which an employer was paying on October 31, 1978 cannot be reduced before October 31, 1979 or before the expiration of a collective bargaining agreement in effect on October 31, 1978, whichever is later.

Where an employer has not been in compliance with the Act by the times specified in the Act, and attempts to reduce benefits, or compensation, the employer may be required to remedy its practices in accord with ordinary Title VII remedial principles.

33. Q. Can an employer self-insure benefits for pregnancy-related conditions if it does not self-insure benefits for other medical conditions?

A. Yes, so long as the benefits are the same. In measuring whether benefits are the same, factors other than the dollar coverage paid should be considered. Such factors include the range of choice of physicians and hospitals, and the processing and promptness of payment of claims.

34. Q. Can an employer discharge, refuse to hire or otherwise discriminate against a woman because she has had or is contemplating having an abortion?

A. No. An employer cannot discriminate in its employment practices against a woman who has had or is contemplating having an abortion.

35. Q. Is an employer required to provide fringe benefits for abortions if fringe benefits are provided for other medical conditions?

A. All fringe benefits other than health insurance, such as sick leave, which are provided for other medical conditions, must be provided for abortions. Health insurance, however, need be provided for abortions only where the life of the woman would be endangered if the fetus were carried to term or where medical complications arise from an abortion.

36. Q. If complications arise during the course of an abortion, as for instance excessive hemorraging, must an employer's health insurance plan cover the additional cost due to the complications of the abortion?

A. Yes. The plan is required to pay those additional costs attributable to the complications of the abortion. However, the employer is not required to pay for the abortion itself, except where the life of the mother would be endangered if the fetus were carried to term.

37. Q. May an employer elect to provide insurance coverage for abortions?

A. Yes. The Act specifically provides that an employer is not precluded from providing benefits for abortions whether directly or through a collective bargaining agreement, but if an employer decides to cover the costs of abortion, the employer must do so in the same manner and to the same degree as it covers other medical conditions.

Appendix C

From the Federal Register of Tuesday, June 12, 1979.

DEPARTMENT OF HEALTH, EDUCATION, AND WELFARE

45 CFR Part 90

Nondiscrimination on the Basis of Age in Programs or Activities Receiving Federal Financial Assistance

AGENCY: Department of Health, Education, and Welfare.

ACTION: Final rule.

SUMMARY: These regulations implement the provisions of the Age Discrimination Act of 1975, as amended (Act). They are general regulations designed to guide the development of agency specific regulations by each Federal agency which administers programs of Federal financial assistance. The Age Discrimination Act prohibits discrimination on the basis of age in programs or activities receiving Federal financial assistance. The Act also contains certain exceptions which permit, under limited circumstances, continued use of age distinctions or factors other than age which may have a disproportionate effect on the basis of age. These regulations discuss what is age discrimination under the Act, the circumstances under which the statutory exceptions may be invoked, the responsibilities of Federal agencies and recipients to enforce the Act, and the procedures for investigation, conciliation, and enforcement. Each Federal agency which administers programs of Federal financial assistance must issue age discrimination regulations which conform to these general regulations.

EFFECTIVE DATE: July 1, 1979.

FOR FURTHER INFORMATION CONTACT: Bayla F. White, Director Age Discrimination Task Force, Room 711-E, Hubert Humphrey Building, 200 Independence Avenue, S.W., Washington, D.C. 20201, (202) 245-6284.

SUPPLEMENTARY INFORMATION:

Background

In November 1975, Congress enacted the Age Discrimination Act (42 U.S.C. 6101, *et seq.*) as part of the Amendments to the Older Americans Act (P.L. 94-135). At that time, the express purpose of the Act was to prohibit unreasonable discrimination based on age in programs and activities receiving Federal financial assistance, including the State and Local Fiscal Assistance Act of 1972. The Act also permitted federally assisted programs and activities, and recipients of Federal funds, to continue to use: (1) some age distinctions, and (2) "reasonable factors other than age." The Act applied to persons of all ages.

Prior to the enactment of any regulations, the Act required the Commission on Civil Rights to conduct a study of age discrimination in federally funded programs and activities. The Commission transmitted its study to the President and the Congress on January 10, 1978. The Commission published the second part of its study in January 1979. The Act also required each affected Federal agency to respond to the Commission's findings and recommendations.

After the receipt of the report of the Commission on Civil Rights and the Federal agency responses to that report, the Congress considered amendments to the Age Discrimination Act of 1975. In October 1978, Congress amended the Act (P.L. 95-478). Congress struck the word "unreasonable" from the statement of purpose clause, so that the purpose of the Act is to prohibit discrimination based on age in programs and activities receiving Federal financial assistance. However, the Congress retained the exceptions to the prohibition against age discrimination. Thus, the Act still permits the use of: (1) some age distinctions, and (2) "reasonable factors other than age." The Act continues to apply to persons of all ages.

According to the language of the Act, the prohibition against age discrimination will become effective when regulations are issued to enforce the Act. The Act requires the Secretary of HEW to publish proposed and then final general regulations. HEW issued proposed general regulations on December 1, 1978. These regulations are the final general regulations required by the Act. They set standards for other Federal agencies to follow in the development of agency specific regulations. The Act also requires each agency which provides Federal financial assistance to issue proposed and then final specific regulations. All agency specific regulations must conform to these general regulations and must be approved by the Secretary of HEW.

Rulemaking History

The Department of Health, Education, and Welfare has been vitally concerned about the need for public participation in the development of these regulations because of the substantial impact the Age Discrimination Act will have on the operation of federally assisted programs.

As the first step of its obligation to issue general regulations, HEW published in the Federal Register (43 FR 8756) a Notice of Intent To Issue Age Discrimination Regulations (NOI) on March 2, 1978. The NOI briefly identified some of the major issues addressed later in the regulatory process. Persons wishing additional information on the age discrimination regulations were asked to write to HEW. Over 600 individuals and organizations responded to the NOI. These names were incorporated into a mailing list for distribution of materials developed during the rulemaking process.

Since these general regulations apply to all Federal departments and agencies which administer programs of Federal financial assistance, HEW created an Interagency Age Discrimination Task Force to coordinate the development of the regulations. The Interagency Task Force consists of at least one representative from every department or agency which ultimately must issue its own

age discrimination regulations, as well as observers, from other interested Federal agencies. The Interagency Task Force met five (5) times during the development of the age discrimination regulations to consider both substantive and procedural matters. Consultations were also held with individual Federal agencies. The Interagency Task Force will continue to function during the development of agency specific regulations.

The Notice of Proposed Rulemaking (NPRM) was published in the Federal Register (p. 56428–56446) on December 1, 1978. The NPRM contained a discussion of the major issues and a section-by-section analysis of the proposed regulations as well as the text of the proposed rules. At certain key places in the proposed rules, HEW presented options for public consideration and comment. Publication of the proposed rules inaugurated a 90-day public comment period.

HEW distributed more than 16,000 copies of the proposed rules. Copies were mailed to every member of Congress, every State governor, the head of every Federal agency which provides Federal financial assistance, adminstrators of federally assisted programs, recipients of Federal funds at the State and local levels, interested individuals and groups. Special efforts were made to distribute copies of the NPRM to groups representing the interests of the elderly and of children and youth.

In January and early February, the Department held public hearings in Washington, D.C., and in each of HEW's 10 Regions in order to obtain public comment on the proposed rules. A total of 170 witnesses made presentations at those hearings. In addition, 246 letters were received containing comments, criticisms and suggestions on nearly every section of the proposed rules. Comments made at the public hearings and in writing have come from individuals, from State and local governmental units, from providers of federally supported services, from public officials at the Federal, State and local levels, and a large number have come from groups representing the interests of the elderly. The comments and verbatim transcripts from the eleven hearings have been analyzed and used in the development of these final regulations. A summary of the comments received and the responses to those comments follow the text of these regulations.

Although the final government-wide regulations have been significantly affected by the comments received, the implementation of the Age Discrimination Act is a continuing process which provides several opportunities for public participation. Each agency providing Federal financial assistance must now issue its own proposed and then final, specific age discrimination regulations. The issuance of proposed agency regulations 90 days after these general regulations are published will provide another opportunity for the public to participate in the shaping of age discrimination policies. The actual impact of the Age Discrimination Act and the problems which recipients of Federal financial assistance may encounter in implementing these general age discrimination regulations will be examined after 30 months time. Similarly, each agency will examine and publish for comment its own assessment of the effectiveness of its age discrimination regulations after they have been in effect for 30 months.

HEW will amend and revise the government-wide regulations as need and experience dictate.

Overview of the Regulations

The following paragraphs summarize the text of the final regulations. The last section of the preamble contains a discussion of the resolution of certain major issues which were raised in the NPRM and an explanation of key parts of the text of the final regulations.

Subpart A—General

The four sections in Subpart A explain the purpose of the Age Discrimination Act (§ 90.1), the purpose of the general age discrimination regulations (§ 90.2), the programs and activities covered by the Act (§ 90.3) and the meaning of important terms used in the regulations (§ 90.4).

The Age Discrimination Act is designed to prohibit discrimination on the basis of age in programs or activities which receive Federal financial assistance. The Act also contains certain exceptions which permit age distinctions and factors other than age to continue in use under certain circumstances (§ 90.1). The Act applies to persons of all ages.

The Act generally covers all programs and activities which receive Federal financial assistance. However, the Act does not apply to any age distinction "established under authority of any law" which provides benefits or establishes criteria for participation on the basis of age or in age related terms. Thus, age distinctions which are "established under authority of any law" may continue in use. These regulations (§ 90.3) define the phrase "any law" to mean Federal statutes, State statutes or local statutes adopted by elected, general purpose legislative bodies.

The Act also excludes from its coverage most employment practices, except for programs funded under the public service employment titles of the Comprehensive Employment and Training Act (CETA). These regulations do cover any program or activity which is both a program of Federal financial assistance and provides employment such as the College Work Study Program (42 U.S.C. 2751, *et seq.*) and the Work Incentive Program (42 U.S.C. 630, *et seq.*). The Age Discrimination in Employment Act (ADEA) which is administered by the Department of Labor, [Equal Employment Opportunity Commission (EEOC) after July 1, 1979], continues to be the Federal statute that prohibits employment discrimination for persons between the ages of 40 and 70. Individuals in this age range who experience employment discrimination, other than in CETA public service employment programs, must look to the ADEA for relief, not to the Age Discrimination Act.

Section 90.4 defines important terms used throughout these regulations.

Subpart B—What Is Age Discrimination?

This subpart sets out the rules against age discrimination and the conditions under which the statutory exceptions apply.

No person in the United States shall, on the basis of age, be excluded from participation in, be denied the benefits of, or be subjected to discrimination under, any program or activity receiving Federal financial assistance (§ 90.12(a)). This general rule is limited by the exceptions which are contained in section 304 of the Act and which are explained in §§ 90.14 and 90.15 of these regulations. The specific prohibited actions, are patterned after the regulations issued under Title VI of the Civil Rights Act of 1964 (45 CFR Part 80). As a general rule, separate or different treatment which denies or limits service from or participation in a program receiving Federal financial assistance will be prohibited by these regulations.

The Act contains several exceptions which limit the general prohibition against age discrimination. Section 304(b)(1) of the Act permits the use of age distinctions which are necessary to the normal operation or to the achievement of a statutory objective. It also permits actions which are based on reasonable factors other than age. The regulations provide definitions for two terms which are essential to an understanding of those exceptions: "normal operation" and "statutory objective" (§ 90.13). "Normal operation" means the operation of a program or activity without significant changes that would impair its ability to meet its objectives. "Statutory objective" is defined to mean any purpose which is explicity stated in a Federal statute, State statute or local statute or ordinance.

The regulations establish a four part test, all parts of which must be met for an explicit age distinction to satisfy one of the statutory exceptions and to continue in use in a Federally assisted program (§ 90.14). This four part test will be used to scrutinize age distinctions which are imposed in the administration of Federally assisted programs, but which are not explicitly authorized by a Federal, State or local statute.

Recipients of Federal funds are also permitted to take an action otherwise prohibited by the Act, if the action is based on "reasonable factors other than age." In that event, the action may be taken even though it has a disproportionate effect on persons of different ages. However, according to the regulations (§ 90.15), the factor other than age must bear a direct and substantial relationship to the program's normal operation or to the achievement of a statutory objective.

The regulations place on the recipient the burden of proving that an age distinction or a factor other than age qualifies for an exception (§ 90.16).

Subpart C—What Are the Responsibilities of the Federal Agencies?

This subpart contains four sections which explain the responsibilities that Federal agencies have to implement the ADA.

Each agency which extends Federal financial assistance must issue proposed and then final regulations to enforce the Act

(§ 90.31). The agency specific regulations must be consistent with these government-wide regulations and must be approved by the Secretary of HEW. The final agency specific regulation must contain an appendix listing all age distinctions which appear in Federal statutes and regulations which affect the agency's programs of Federal financial assistance. The appendix is the first step of a process set in motion by these regulations to inform the public of those age distinctions used in Federal Program administration. The appendix will *not* constitute agency approval or disapproval of the age distinctions contained in its regulations.

As a second step in this public information process, each Federal agency must review the age distinctions it imposes on its recipients by regulation or by administrative action to determine whether these age distinctions are permissible under the Act (§ 90.32). This review must be completed within 12 months after publication of the agency final regulations and must be published for public comment in the Federal Register. The report must indicate which age distinctions meet the requirements of the Act and will be continued and which will be eliminated. The report must identify age distinctions not in regulations which meet the requirements of the Act and which will subsequently be incorporated into regulations. Beginning with the effective date of an agency's specific regulations, no new age distinction may be imposed, unless it is adopted by regulation using the notice and comment procedures of the Administrative Procedure Act (5 U.S.C. 553). Beginning one year from the publication of an agency's specific regulations, no existing age distinction may be continued unless it has already been adopted by regulation or is adopted by regulation using the notice and comment procedures of the Administrative Procedure Act (5 U.S.C. 553).

The next two sections of the regulations (§§ 90.33 and 90.34) reflect HEW's goal of reducing administrative burden on recipients while still ensuring compliance with the Act. To avoid or minimize conflicting actions by different Federal agencies which deal with the same recipient, the Secretary of HEW may designate "lead agencies" to coordinate compliance and enforcement activities in those instances where two or more agencies provide assistance to the same recipient (§ 90.33). Interagency cooperation may extend to all compliance and enforcement activities *except* for the actual termination of funds and the notification to Congress of that termination.

The Act requires each agency to report annually to the Congress, through HEW, on its compliance and enforcement activities. The final regulations adopt a targeted approach to data collection and analysis, which will maximize the opportunity to measure and analyze actual progress in complying with the Act and, at the same time, minimize the burden of unnecessary data collection on recipients (§ 90.34).

The targeted approach to data collection builds on the analysis of existing data about compliance, such as complaint data and information from compliance reviews. The regulations also provide for agencies to collect data which are directly relevant to particular patterns or practices of discrimination revealed by complaints, compliance reviews or other compliance activities. This targeted approach gives each agency the authority to tailor its own data collection to the characteristics of its programs, rather than establishing specific reporting requirements for every federally assisted program.

Subpart D—Investigation, Conciliation and Enforcement Procedures

This subpart of the regulations is divided into 10 sections dealing with various aspects of the compliance and enforcement process.

Each agency is required to establish procedures for compliance, investigation, conciliation and enforcement (§ 90.41). A recipient has primary responsibility to ensure that its programs and activities are in compliance with the Act and must take necessary steps to eliminate any violations. An agency has responsibility to attempt to secure recipient compliance with the Act by voluntary means. An agency must enforce the Act when a recipient fails to eliminate violations of the Act (§ 90.42).

Each agency is required to provide written notice to each recipient of the recipient's obligations under the Act, to provide technical assistance to recipients where necessary and to make available educational materials explaining the rights and obligations of beneficiaries and recipients (§ 90.43(a)).

Moreover, each Federal agency must direct its recipients which employ the equivalent of 15 or more persons on a full-time basis to prepare a written self-evaluation (§ 90.43(b)). A recipient's self-evaluation will focus on age distinctions which are imposed directly by the recipient and not on any factors other than age. Each recipient must justify the continued use of any distinction as sanctioned under these regulations. A recipient must take corrective and remedial action whenever the self-evaluation indicates a violation of the Act. The recipient self-evaluation must be completed 18 months after the effective date of agency regulations. The self-evaluation must be available to the agency or the public for a period of three years following its completion.

Every agency must establish a procedure for processing complaints of age discrimination (§ 90.43(c)). The complaint handling procedure must include an initial screening by the Federal agency and notice to complainants and recipients of their rights and obligations in the complaint process. All complaints which fall within the coverage of the Act will be referred to a mediation process which will be managed by a single agency designated by the Secretary of HEW. That agency is the Federal Mediation and Conciliation Service (FMCS).

Complainants and recipients are required to participate in the effort to reach a mutually satisfactory mediated settlement of the complaint, although they need not meet with the mediator at the same time. The mediation process may last no more than 60 days from the date the agency first receives the complaint. The mediator will have the authority to terminate the mediation at any time before the end of the 60-day period if the process appears to have broken down. The terms of settlement that are satisfactory to both parties will be reduced to writing and sent to the Federal agency which referred the complaint. The Federal agency will take no further action on a complaint which has been successfully mediated.

If mediation does not succeed, or if a mediated settlement is violated, Federal agencies will engage in informal fact finding and then, if necessary, proceed to formal investigation of the complaint. The formal investigation may result in an administrative hearing before an administrative law judge. A Federal agency may terminate a recipient's Federal funds if the administrative law judge finds that the recipient has violated the Act.

The regulations of each Federal agency must provide that the agency may conduct compliance reviews, preaward reviews and use other similar procedures to determine compliance with the Act. These procedures are *not* dependent on the filing of a complaint of age discrimination (§ 90.44).

To help determine whether a recipient is in compliance with the Act, each Federal agency may require its recipients to make their records reasonably accessible to the agency and to furnish information to the agency (§ 90.45). Recipients are prohibited from acts of retaliation or intimidation against individuals who file age discrimination complaints or who cooperate in any aspect of the enforcement process (§ 90.46).

After a hearing before an administrative law judge, a Federal agency may terminate Federal funds to a recipient found to have violated the Act or regulations implementing the Act. Termination must be limited to the particular recipient which has violated the Act and to the program where the violation has been found. An agency may delay granting new Federal funds to a recipient when termination proceedings have been initiated (§ 90.47).

When Federal funds are terminated, the agency may pay those funds to another qualified recipient which can demonstrate the ability to achieve the goals of the Federal program's authorizing statute and to comply with the Age Discrimination Act (§ 90.48). If a Federal agency or an administrative law judge, finds that a recipient has engaged in age discrimination, the recipient must take remedial action as the agency requires. Even in the absence of a finding of discrimination, recipients may voluntarily take affirmative action to encourage the participation of persons in age groups where participation has been limited in the past. The regulations permit a recipient to provide special benefits to children or the elderly provided that the benefits do not result in the exclusion of persons who are eligible to participate in the recipients' program (§ 90.49).

The Act authorizes a private right of action, when an individual has exhausted administrative remedies. The regulations implement that provision (§ 90.50). Administrative remedies are exhausted when either 180 days have elapsed from the filing of the complaint and the agency has made no finding or the agency issues a finding in favor of the recipient. The complainant may then file a suit in a U.S. district court. The

complainant must indicate at the time the suit is filed, if attorney's fees will be demanded in the event that the complainant is successful. No action can be brought if the same alleged violation by the same defendant is the subject of a pending action in any U.S. court. Complainants who wish to file an action must give 30 days notice to the Attorney General, the Secretary of HEW, the head of the granting agency and the recipient.

Subpart E—Future Review of Age Discrimination Regulations

HEW must review the effectiveness of these general age discrimination regulations 30 months after the regulations take effect (§ 90.61). In addition, each agency must review the effectivess of its own regulations 30 months after they become effective (§ 90.62). These reviews must be published in the Federal Register with an opportunity for public comment.

Critical Issues

Comments were submitted on many sections of the proposed regulations and on many different issues raised in the NPRM. These comments and the responses to them are set forth in the appendix which follows the text of the regulations. Some of the comments concerned critical policy issues with respect to the implementation of the Act. These critical issues are discussed in the following paragraphs.

1. *What Ages Does the Act Cover?* Section 303 of the Act prohibits discrimination on the basis of age in federally funded programs or activities. Although the legislative history indicates Congressional concern for the problems of the elderly in particular, the Congress made it clear in its Conference Committee report that the Act is intended to apply to persons of all ages.

When the Act was originally passed in 1975, Congress directed the United States Commission on Civil Rights to conduct a study of age discrimination in federally funded programs, and required each affected Federal agency to respond to the Commission's study. After reviewing the Commission's report and Federal agency responses to it, Congress considered amendments to the Act. Nowhere in the amendment process was there any discussion of limiting or changing the coverage of the Act. It continues to extend protection to persons of all ages.

Various advocacy groups for older persons have suggested that HEW construe these general implementing regulations to protect only the elderly or to provide greater protection for older persons than for other age groups. This construction is not legally supportable in view of the legislative history and the plain language of the Act.

However, the Congress has consistently made clear its support for the concerns of older persons. It is therefore unlikely that Congress intended the Act to call into question the generally accepted special benefits which are provided to older persons in programs that are otherwise available to a wider age range of the population. Public comment on the regulations was almost unanimously supportive of these benefits, which often take the form of special discounts. Similarly, no one has suggested that similar benefits for children should be questioned under the Act.

HEW supports the continuation of special benefits for children and older persons. Therefore, these regulations permit special benefits for the elderly persons and for children that are extended by recipients so long as they do not result in the exclusion from the program of otherwise eligible persons. [§ 90.49(c)].

2. *Does the Act Require Proportional Allocation of Services and Funds by Age?* Commenters also asked whether the Act requires proportional allocation by age of the services and the benefits of federally assisted programs. Some believe that certain groups, especially the elderly, do not get their "fair share" of funds in certain programs or that certain program participation rates among age groups like the elderly are disproportionately low.

These final regulations do not require proportional program participation by age or the proportional allocation of funds by age. Discrimination has not been defined in this way in other non-discrimination regulations. However, disproportionate allocation of funds or program participation may be one of the elements which triggers an examination of whether age discrimination exists in the federally funded program or activity. If further inquiry is necessary, the recipient may show that the disparity in rates of participation, fund allocation, or services has nondiscriminatory causes. Comments on the NPRM suggested that there may be nondiscriminatory reasons which adequately explain the disproportionately low participation of the elderly in some programs.

3. *What Programs or Activities are "Established Under Authority of Any Law"?* The Age Discrimination Act exempts from coverage age distinctions contained in a program or activity "established under authority of any law" which provides benefits on the basis of age or in age related terms. Congress did not expressly indicate anywhere in the legislative history of the Act what it meant by the term "any law." The regulations must, nevertheless, define the phrase "established under authority of any law" in order to determine which age distinctions are exempted by this provision of the Act.

The NPRM presented four options for interpreting the phrase "any law" and asked for comments on those or any other reasonable interpretations. The NPRM cited two overriding issues to be considered in determining the meaning of "any law" (a) whether to include age distinctions contained in regulations; and (b) whether to include age distinctions enacted by State and local legislative bodies.

The narrowest option interpreted "any law" to mean only Federal statutes. The broadest option intepreted "any law" to include Federal, State and local statutes and Federal, State and local regulations. Supporters of defining "any law" to mean only Federal statutes argued that any other interpretation seriously weakens the Act. Congress could not have intended to give discretion to State or local legislative bodies to exempt any age distinction from the coverage of the Act. To do so would be an abdication of Federal responsibility which defeats the purpose of the Act.

Those who argued that "any law" should mean Federal and State statutes argued that the Act should permit the States to use age in exercising their traditional power in such areas as defining the age of majority, controlling access to a driver's license, and regulating compulsory school attendance. On the other hand, extending this exemption to local statutes and ordinances would permit thousands of local jurisdictions to introduce age distinctions into the administration of Federal programs which would fatally weaken the Act.

Supporters of defining "any law" to mean Federal, State and local statutes and ordinances argued that there is no clear basis for limiting the interpretation of "any law" to Federal statutes. Congress rejected an amendment to the Act in 1978 which would have defined "any law" to mean Federal statutes. Furthermore, there is no basis for excluding local statutes and ordinances if State statutes are included in the definition. They argued that no case has been made that age discrimination occurs as a result of age distinctions in State and local statutes and ordinances and that beneficial age distinctions are enacted by State and local legislative bodies.

Defining "any law" to include all regulations had relatively little support. Some suggested defining "any law" to mean Federal statutes and regulations. Supporters of including regulations in the definition argued that regulations have the force and effect of law and should be included in the "any law" exemption. This position has been rejected on the grounds that it would permit administrators of federally funded programs to impose age distinctions which are not authorized by a legislative body. In addition, HEW does not believe that the language "established under authority of any law" necessarily includes regulations having the force and effect of law.

The final regulations define "any law" to mean Federal, State and local statutes and ordinances. The language of the statute, and the general lack of legislative history to justify any narrower interpretation of that language support the conclusion that Federal and State statutes, and statutes or ordinances enacted by general purpose, elected local governments should be exempt from coverage of the Act. This is particularly appropriate in the absence of any clear indication that age discrimination occurs as a result of State and local statutes. This definition of "any law" recognizes the authority of State and general purpose, elected local governments to enact statutes which condition benefits or participation on the basis of age.

Examples: "Established Under Authority of Any Law"

1. *Federal statutes.* The Adult Education Act (20 U.S.C. 1201–1213) is statutorily designed to provide services or instruction below college level for adults. The Act defines adults as individuals who have attained the age of 16. This limitation on participation in adult education programs is

not covered by the Act. The Runaway Youth Program (42 U.S.C. 5701) authorized under the Juvenile Justice & Deliquency Prevention Act, awards grants for the development and/or strengthening of local facilities to address the immediate needs of runaway youth in a manner which is outside of the law enforcement and juvenile justice systems. The terms "runaway youth," "juveniles," and "young people" are used in the statute without further definition. Reasonable definitions of these terms would not be covered by the Act.

2. *State statutes.* Statutes setting age limitations on obtaining a driver's license or fixing age limits for compulsory school attendance are not covered by the Act.

3. *Local statutes or ordinances.* Age limitations on consuming alcoholic beverages or possessing firearms are not covered by the Act as long as these are adopted by an elected general purpose legislative body.

Note.—Any age distinction not exempted from coverage by the "any law" provision, may still qualify for an exception under another provision of the Act or these regulations.

4. *What are the Rules Against Age Discrimination?* Many commenters asked for clarification of the rules against age discrimination contained in § 90.12 of the regulations. Section 90.12 sets forth a general rule against age discrimination which is based on Section 303 of the Act, and then presents specific rules against age discrimination. These rules are limited by the exceptions contained in the Act and these regulations.

The general rule in § 90.12 reflects the language of the Act: except as provided in the Act and these regulations, ". . . no person in the United States shall, on the basis of age, be excluded from participation in, be denied the benefits of, or be subjected to discrimination under, any program or activity receiving Federal financial assistance." It means that, unless sanctioned by one of the exceptions, recipients of Federal financial assistance may not, either directly or indirectly, do anything to exclude persons from their programs or activities on the basis of age. Nor may recipients do anything not sanctioned by one of the exceptions to deny or limit persons in their efforts to participate in federally funded programs or activities on the basis of their age. For example, a medical school may not exclude persons from admission solely because of their age.

The prohibition against age discrimination does not include an absolute prohibition against separate or different treatment on the basis of age. As a general rule, separate or different treatment which denies or limits services from, or participation in, a program receiving Federal financial assistance would be prohibited by these regulations. On the other hand, these regulations do not automatically invalidate the provision of services through separate or different treatment on the basis of age. Separate or different treatment necessary to normal operations or to the achievement of a statutory objective would qualify for an exception under these regulations.

Section 90.49 of these regulations contains language which affects the rules against discrimination in two important ways: a recipient may voluntarily act to overcome the effects of conditions which, in the past, have limited participation in a federally assisted program on the basis of age; and, a recipient may provide special benefits for children or the elderly if, by so doing, the recipient does not exclude others who are eligible from participating in the federally assisted program. As mentioned earlier, HEW does not believe that Congress meant to disturb the practices of recipients which provide special benefits to children or the elderly. For example, reduced fares for children and for senior citizens on public transportation or on railways or airlines would qualify as a special benefit under § 90.49 of these regulations. The definition of who qualifies as "children" or "elderly" for purposes of receiving a special benefit will be left to the reasonable discretion of the recipients who voluntarily provide the benefit.

5. *What are the Statutory Exceptions to the Rules Against Age Discrimination?* a. *Definitions of Statutory Objective and Normal Operation.* Many commenters questioned the meaning, clarity, and interpretation of the statutory exceptions to the prohibition against age discrimination contained in the proposed rules §§ 90.14 and 90.15.

Two phrases, "normal operations" and "statutory objective" are used in these regulations in interpreting the Act's exceptions for explicit age distinctions (§ 90.14) and for the use of factors other than age (§ 90.15). Critical to an understanding of these statutory exceptions is the definition of "statutory objective" and the definition of "normal operation."

The NPRM stated that statutory objective would mean either: (1) any purpose of a program or activity expressly stated in a statute, or (2) any purpose of a program or activity expressly stated in a statute or reasonably inferred from its provisions or legislative history. Because legislative history is a broad concept and because statutory objectives will be used to justify the use of administratively imposed age distinctions or factors other than age which have a disproportionate effect, HEW believes that the term "statutory objective" should be construed to mean only expressly stated objectives.

The NPRM was silent about whether the term "statutory objective" referred to Federal statutes, or State statutes, or local statutes, or all statutes. HEW believes the definition of "any law" in § 90.3 and the definition of "statutory objective" in § 90.13 should be parallel. Therefore, the final regulations define "statutory objective" to mean "any purpose of a program or activity expressly stated in any Federal statute, State statute or local statute or ordinance adopted by an elected, general purpose legislative body."

The final regulations have not changed the definition of "normal operation." "Normal operation" continues to mean "the operation of a program or activity without significant changes that would impair its ability to meet its objectives." This definition of "normal operation" means that a recipient of Federal funds may not use the statutory exceptions to justify refusing to make changes in program operation because those changes disturb administrative routine or are inconvenient.

b. *The four-part test for determining when an explicit age distinction is necessary to normal program operations or necessary to achieve a statutory objective.* Section 90.14 establishes a four-part test for explicit age distinctions which are claimed to be necessary to the normal operation of a program or activity, or to the achievement of a statutory objective of a program or activity.

The NPRM provided that an action reasonably takes age into account as a factor necessary to the normal operation or the achievement of a statutory objective of a program or activity, if:

(a) Age is used as a measure or approximation of one or more other characteristics (e.g., maturity);

(b) The other characteristic(s) must be measured or approximated in order for the normal operation of the program or activity to continue, or to achieve any statutory objective of the program or activity;

(c) The other characteristic(s) can be reasonably measured or approximated by the use of age; and

(d) The other characteristic(s) are difficult, costly, or otherwise impractical to measure directly.

The final regulations retain the four-part test, with some changes. The word "and" has been added after parts (a) and (b) to clarify the intent that an age distinction must meet all four parts in order to qualify for an exception. The reference to "maturity" has been deleted as an example of a characteristic for which age may be an approximation, because commenters felt that the term was too vague and did not illustrate what was meant in the test. The first part of the test in § 90.14 refers to a situation in which a program uses an age distinction as an indicator of some other characteristic, such as susceptibility to disease.

The third change occurs in part (d) of the test. The final regulations no longer contain a reference to cost or difficulty; however, part (d) now requires that the characteristics for which age is an approximation must be impractical to measure directly on an individual basis.

Thus, to qualify for an exception under § 90.14, all four of the following conditions must be met: (a) the age distinction in question must be used as an indicator or measure of some other (non-age) characteristic; (b) the *other* characteristic must be necessary for "normal operation" or for the achievement of a "statutory objective"; (c) the other characteristic must be capable of being reasonably approximated by age; and (d) the other characteristic must be impractical to measure directly on an individual basis.

The test set out in § 90.14 is designed to require careful scrutiny of age distinctions in programs receiving Federal financial assistance. It is not intended to serve as a basis for permitting continued use of age distinctions for the sake of administrative convenience if this results in denial or limitation of services on the basis of age.

HEW encourages recipients to apply age distinctions flexibly; that is, to permit a person, upon a proper showing of the

necessary characteristic to participate in the activity or program even though he or she would otherwise be barred by the age distinction. Other things being equal, an age distinction is more likely to qualify under one of the statutory exceptions if it does not automatically bar all those who do not meet the age requirements.

Examples:* "Necessary to the Normal Operation of the Program"

1. A youth organization receiving Federal financial assistance imposes a maximum age limitation on membership. The organization claims that it has as an objective, the training, education and character development of youth. The use of a maximum age limit *is necessary* to the normal operation of the recipient's program because:

(a) Age is used as a measure of the need for training, education, and character building experiences preparing for the assumption of adult responsibility; and

(b) The need for the service must be measured in order for the youth organization's objective to be met; and

(c) Age is highly related to the need for this service and is thus a reasonable measure of it; and

(d) It is not practical to measure this need on an individual basis (i.e., while some persons over the age limit might benefit from the service and some persons under the age limit might not need it, there is no practical way to identify them on an individual basis).

2. A medical school receiving Federal financial assistance generally does not admit anyone over 35 years of age, even though this results in turning away highly qualified applicants over 35.

The school claims that it has an objective, the teaching of qualified medical students who, upon graduation, will practice as long as possible. The school believes that this objective requires it to select younger applicants over older ones.

The use of such an age distinction *is not necessary* to the normal operation of the recipient's program because it does not meet the requirement of § 90.14(b).

Age of the applicant may be a reasonable measure of a non-age characteristic (longevity of practice). This characteristic may be impractical to measure directly on an individual basis. Nevertheless, achieving a high average longevity of practice for its graduates cannot be considered a program objective for a medical school within the meaning of the Act. The "normal operation" exception is not intended to permit a recipient to use broad notions of efficiency or cost-benefit analysis to justify exclusion from a program on the basis of age. The basic objectives of the medical school involve training competent and qualified medical school graduates. These objectives are not impaired if the average length its graduates practice medicine is lowered by a fraction of a year (or even more) by the admission of qualified applicants over 35 years of age.

*The examples illustrate general situations in which the regulations are applied to hypothetical recipients.

Examples:* "Necessary to the Achievement of a Statutory Objective"

1. Applications for grants for disease control programs under the Public Health Service Act can only be approved if they "(B) contain assurances satisfactory to the Secretary that . . . the applicant will conduct such programs as may by necessary (i) to develop an awareness in those persons in the area served by the applicant who are most susceptible to the disease or conditions . . . of appropriate preventive behavior and measures (including immunization) and diagnostic procedures for such disease, and (ii) to facilitate their access to such measures and procedures," (42 U.S.C. 247b).

Under the test of § 90.14, *it is necessary* to the achievement of this explicit statutory objective to give priority in immunization to age categories most at risk to the disease in question because:

(a) Age is being used as a measure of susceptibility to a disease; and

(b) Susceptibility to disease must be measured for the statutory objective to be met; and

(c) Age is a reasonable measure of susceptibility to the particular disease; and

(d) Susceptibility to the disease is impractical to measure directly on an individual basis.

2. The purpose of the Adult Education Act (20 U.S.C. 1201 *et seq.*) is to provide education that will "enable all adults to continue their education . . . and . . . enable them to become more employable, productive, and responsible citizens." (20 U.S.C. 1201.) The Act defines an adult as "any individual who has attained the age of 16." (20 U.S.C. 1201(a).)

A recipient limits participation in its adult education program to adults under 35 on the grounds that this is necessary to achieve the explicit Adult Education Act objective of increasing employability, productivity, and responsibility.

It *is not necessary* to the achievement of this statutory objective to limit participation to those under 35. This age limitation fails at least two elements of the four-part test set out in § 90.14. Employability, productivity and responsibility need not be measured in order to meet the statutory objective of making adults more employable, productive or responsible because the objective is comparative rather than absolute. The statute only requires an effort to improve these characteristics in an individual, not to maximize the degree of improvement.

These characteristics have no demonstrable correlation with age and cannot be reasonably measured by the use of age (§ 90.14(c)).

Whether or not these characteristics can practically be measured directly on an individual basis need not be considered, since the characteristics do not have to be measured in order to meet the statutory objective.

c. *Use of Reasonable Factors Other than Age.* Section 90.15 of the NPRM set out four options to characterize the relationship between a factor other than age that may have a discriminatory effect and the normal operation of a program or the achievement of a statutory objective. Those four options were rational, direct, substantial, and necessary. Commenters disagreed about what relationship a factor other than age should bear to the normal operation or the statutory objective of a program or activity.

The final regulations require that a factor other than age bear a direct and substantial relationship to the normal operation of the statutory objective of a program or activity. The "rational" option, which was equated in the NPRM with the rational basis test used under the equal protection clause of the Fourteenth Amendment, has been rejected on the grounds that many serious discriminatory effects created by factors other than age would be likely to survive a rational basis level of scrutiny.

The "necessary" option has been rejected because it requires a test which is not sufficiently flexible to deal with the variety of factors other than age and the variation in facts and circumstances that contribute to whether those factors other than age are "reasonable."

The regulations adopt the "direct and substantial" standard because it provides the appropriate flexibility and, at the same time, avoids the weaknesses inherent in the "rational" standard. Use of the "direct and substantial" standard means that use of factors other than age must be carefully examined in light of the individual facts and circumstances surrounding their use. This examination will determine whether use of the factor other than age is a sufficiently effective method of achieving a worthwhile program purpose to justify limiting or denying services or participation to adversely affected persons.

Examples:* "Reasonable Factors Other Than Age"

1. A federally assisted training program uses a physical fitness test as a factor for selecting participants to train for a certain job. The job involves frequent heavy lifting and other demands for physical strength and stamina. Even though older persons might fail the test more frequently than younger persons, the physical fitness test measures a characteristic that is *directly and substantially* related to the job for which persons are being trained and is, therefore, permissible under the Act.

2. The same program referred to in (1) above uses the same physical fitness test to select participants for a training program for clerical work. It claims that persons who pass the test are likely to do better work than those who are unable to pass the test. Even if this were true, the relationship between the requirements of the test and the requirements of the type of job for which training is being offered *is not direct and substantial.* It is so tenuous and limited that it will not justify the test's age discriminatory effect. In this situation, use of the test would violate the Act.

*The examples illustrate general situations in which the regulations are applied to hypothetical recipients.

* The examples illustrate general situations in which the regulations are applied to hypothetical recipients.

6. *Cost/Benefit Analysis.* The NPRM raised the issue of whether cost-benefit considerations can justify the use of age distinctions or factors other than age. A majority of commenters expressed support for the NPRM position that a cost-benefit consideration by itself cannot be the sole justification for an exception under § 90.14 and § 90.15. Others, however, opposed any use of cost-benefit analysis in the administration of federally assisted programs.

The use of an explicit age distinction in the operation of a federally assisted program will have to be justified as necessary to the normal operation of the program or to the achievement of a statutory objective. That is, the explicit age distinction will have to meet the four part test of § 90.14 and cannot be disqualified or justified because it reflects a cost-benefit consideration. Use of a factor other than age will have to meet the test established in § 90.15 and cannot be disqualified or justified because it reflects a cost-benefit consideration. The scrutiny afforded age distinctions and factors other than age under these regulations should have the effect of screening out discriminatory cost-benefit considerations.

7. *Relationship Between General and Age-Targeted Programs.* Another major issue in the NPRM concerned similar services provided by both general and age-targeted programs. The question was whether the existence of an age-targeted program in any way relieved a general program of its obligation to serve the age group eligible for the age-targeted program.

Many commenters expressed the view that the general program was not relieved in any way of its obligation to serve everyone regardless of age. They reasoned that: the age targeted program was intended to supplement service for the eligible population, not to replace the services provided by the general program; an age-targeted program recognizes the special or additional needs of an age group, so that any restriction on the availability of services in a general program based solely on the existence of an age-targeted program would be discriminatory; administrators should not be given discretion to limit participation on the basis of age in a general program which Congress created to serve all ages.

Some commenters did say, however, that there are occasions when a general program should be permitted to deny services to an age group which is served elsewhere. They reasoned that the general programs can then focus on those in need who are not being served elsewhere; services offered in a general program should be based on the needs of the community as a whole and should take into account what is offered elsewhere; to require a general program to spread its limited resources to all age groups, regardless of the availability of similar services, would weaken the quality of the services provided. There was no support for the view that the general program's obligation was unconditionally lessened by the existence of the age targeted program.

The final regulations continue the policy expressed in the NPRM that, for a general program, any deviation from a policy of serving all eligible persons regardless of age that results in a denial or limitation of service on the basis of age is only permissible if it meets one of the statutory exceptions under § 90.14 or § 90.15.

A general program can focus its services by referring persons to existing age targeted programs only if those actions do not result in the denial of services to the individual or in the provision of lesser or different services. However, HEW is persuaded that there are situations when referral to an age targeted program does not result in a denial or limitation of services. For example, a program which serves all ages may be aware of an age targeted program which, because of its specialization, offers better services to that age group. A general program may have a waiting list of applicants while a similar age targeted program has space available. In situations like these, a general program could refer an applicant to the age targeted program provided that it had sufficiently well established relationship with the age targeted program to assure that the person referred actually received the service sought.

8. *Mediation of Age Discrimination Complaints.* The NPRM proposed that complaints of age discrimination be subject to mediation after initial screening by the Federal agency. The NPRM also proposed that participation in mediation be mandatory for both complainant and recipient and that administration of the mediation process be centralized in one government agency, the Federal Mediation and Conciliation Service (FMCS). These provisions of the NPRM have been kept in the final regulations.

While most commenters supported the proposed use of mediation, some commenters questioned the appropriateness of requiring mediation as the first step in resolving an age discrimination complaint. They argued that mediation promotes inappropriate bargaining over civil rights, that mediation may jeopardize the rights of complainants, that not every complaint is suitable for mediation, that mediation introduces a new and different step in the complaint resolution process which will be unnecessarily confusing to complainants and recipients.

HEW continues to believe that the mediation process is an important innovation in resolution of age discrimination complaints. Mediation is an effort to provide faster and more creative resolution of complaints through informal methods of dispute resolution. Attempts to reach a mediated settlement of the complaint must be completed in the first 60 days after the complaint is received. While mediation does represent a new step in the complaint resolution process, the experience in resolving complaints under other civil rights statutes has been that the 60 days set aside for mediation will not significantly delay the enforcement process.

Experience with mediation in other areas indicates that even the most intransigent parties can arrive at a mutually satisfactory resolution of their dispute. Consequently, HEW believes it is desirable to require that mediation be attempted in all complaints. Mediation does not necessarily mean that the two parties to the dispute must meet face to face; each may meet separately with the mediator. Since the mediated settlement must be satisfactory to both parties, neither the complainant nor the recipient is compelled to settle the complaint. Since the cost of the mediator will be paid by the Federal government, the financial burden on complainants and recipients will be minimal. HEW believes that the ADA offers a unique opportunity to try this innovative approach to the resolution of disputes.

These regulations require that the management of the mediation process be centralized in one agency, designated by the Secretary of HEW. The FMCS will be that agency. Commenters critical of this decision questioned the wisdom of introducing a new agency into the civil rights enforcement process. Some suggested that each agency should manage its own mediation process, to permit the use of staff who would be more familiar with the program and problems of the Federal agency receiving the complaint.

HEW believes that the benefits to be realized by centralizing the management of the mediation process are substantial and that the FMCS is the appropriate agency for the job. The use of a single agency to manage the mediation process assures that uniform standards will be used in the recruitment and training of mediators, that the training will be centralized, that consistent procedures will be followed in the mediation, and that there can be a comprehensive and coherent evaluation of the process as part of the 30 month review of the effectiveness of these regulations. While the use of the FMCS does introduce a new agency into civil rights enforcement, one of the key elements in mediation is that both sides have confidence that the mediator is an independent third party. HEW believes that mediation of age discrimination complaints has a better chance to succeed if the mediator is not part of the staff of a Federal agency responsible for enforcing the Age Discrimination Act. The FMCS, which has an established reputation for mediating disputes, will draw on some of its experienced staff and will recruit and train a cadre of community based mediators who will work on age discrimination complaints.

After 30 months, HEW will evaluate the mediation process in accordance with § 90.61 of these regulations. The process will be used, revised or restructured as indicated by the results of that review.

The Department of Health, Education, and Welfare adds Part 90 to Title 45 of the Code of Federal Regulations as set forth below.

Dated: June 5, 1979.

Joseph A. Califano Jr.,

Secretary, Department of Health, Education, and Welfare.

The Department of Health, Education, and Welfare adds Part 90 to Title 45 of the Code of Federal Regulations as set forth below:

PART 90—NONDISCRIMINATION ON THE BASIS OF AGE IN PROGRAMS OR ACTIVITIES RECEIVING FEDERAL FINANCIAL ASSISTANCE

Subpart A—General

Sec.

90.1 What is the purpose of the Age Discrimination Act of 1975?

90.2 What is the purpose of these regulations?
90.3 What programs and activities does the Age Discrimination Act of 1975 cover?
90.4 How are the terms in the regulations defined?

Subpart B—What is Age Discrimination?

(Standards for Determining Discriminatory Practices)

90.11 Purpose of this Subpart.
90.12 Rules against age discrimination.
90.13 Definitions of "normal operation" and "statutory objective."
90.14 Exceptions to the rules against age discrimination. Normal operation or statutory objective of any program or activity.
90.15 Exceptions to the rules against age discrimination. Reasonable factors other than age.
90.16 Burden of proof.

Subpart C—What are the Responsibilities of the Federal Agencies?

90.31 Issuance of regulations.
90.32 Review of agency policies and administrative practices.
90.33 Interagency cooperation.
90.34 Agency reports.

Subpart D—Investigation, Conciliation and Enforcement Procedures

90.41 What is the purpose of this Subpart?
90.42 What responsibilities do recipients and agencies have generally to ensure compliance with the Act?
90.43 What specific responsibilities do agencies and recipients have to ensure compliance with the Act?
90.44 Compliance reviews.
90.45 Information requirements.
90.46 Prohibition against intimidation or retaliation.
90.47 What further provisions must an agency make in order to enforce its regulations after an investigation indicates that a violation of the Act has been committed?
90.48 Alternate funds disbursal procedure.
90.49 Remedial and affirmative action by recipients.
90.50 Exhaustion of administrative remedies.

Subpart E—Future Review of Age Discrimination Regulations

90.61 Review of general regulations.
90.62 Review of agency regulations.

Authority: *Age Discrimination Act of 1975, 42 U.S.C. 6101 et seq.*

Subpart A—General

§ 90.1 What is the purpose of the Age Discrimination Act of 1975?

The Age Discrimination Act of 1975, as amended, is designed to prohibit discrimination on the basis of age in programs or activities receiving Federal financial assistance. The Act also permits federally assisted programs and activities, and recipients of Federal funds, to continue to use certain age distinctions and factors other than age which meet the requirements of the Act and these regulations.

§ 90.2 What is the purpose of these regulations?

(a) The purpose of these regulations is to state general, government-wide rules for the implementation of the Age Discrimination Act of 1975, as amended, and to guide each agency in the preparation of agency-specific age discrimination regulations.

(b) These regulations apply to each Federal agency which provides Federal financial assistance to any program or activity.

§ 90.3 What programs and activities does the Age Discrimination Act of 1975 cover?

(a) The Age Discrimination Act of 1975 applies to any program or activity receiving Federal financial assistance, including programs or activities receiving funds under the State and Local Fiscal Assistance Act of 1972 (31 U.S.C. 1221 *et seq.*).

(b) The Age Discrimination Act of 1975 does not apply to:

(1) An age distinction contained in that part of a Federal, State of local statute or ordinance adopted by an elected, general purpose legislative body which:

(i) Provides any benefits or assistance to persons based on age; or

(ii) Establishes criteria for participation in age-related terms; or

(iii) Describes intended beneficiaries or target groups in age-related terms.

(2) Any employment practice of any employer, employment agency, labor organization, or any labor-management joint apprenticeship training program, except for any program or activity receiving Federal financial assitance for public service employment under the Comprehensive Employment and Training Act of 1974 (CETA), (29 U.S.C. 801 *et seq.*).

§ 90.4 How are the terms in these regulations defined?

As used in these regulations, the term:

"Act" means the Age Discrimination Act of 1975, as amended, (Title III of Public Law 94-135).

"Action" means any act, activity, policy, rule, standard, or method of administration; or the use of any policy, rule, standard, or method of administration.

"Age" means how old a person is, or the number of elapsed years form the date of a person's birth.

"Age distinction" means any action using age or an age-related term.

"Age-related term" means a word or words which necessarily imply a particular age or range of ages (for example, "children," "adult," "older persons," but not "student").

"Agency" means a Federal department or agency that is empowered to extend financial assistance.

"Federal financial assistance" means any grant, entitlement, loan, cooperative agreement, contract (other than a procurement contract or a contract of insurance or guaranty), or any other arrangement by which the agency provides or otherwise makes available assistance in the form of:

(a) Funds;

(b) Services of Federal personnel; or

(c) Real and personal property or any interest in or use of property, including:

(1) Transfers or leases of property for less than fair market value or for reduced consideration; and

(2) Proceeds from a subsequent transfer or lease of property if the Federal share of its fair market value is not returned to the Federal Government.

"Recipient" means any State or its political subdivision, any instrumentality of a State or its political sub-division, any public or private agency, institution, organization, or other entity, or any person to which Federal financial assistance is extended, directly or through another recipient. Recipient includes any successor, assignee, or transferee, but excludes the ultimate beneficiary of the assistance.

"Secretary" means the Secretary of the Department of Health, Education, and Welfare.

"United States" means the fifty States, the District of Columbia, Puerto Rico, the Virgin Islands, American Samoa, Guam, Wake Island, the Canal Zone, the Trust Territory of the Pacific Islands, the Northern Marianas, and the territories and possessions of the United States.

Subpart B—What is Age Discrimination?

Standards for Determining Discriminatory Practices

§ 90.11 Purpose of this subpart.

The purpose of this subpart is to set forth the prohibitions against age discrimination and the exceptions to those prohibitions.

§ 90.12 Rules against age discrimination.

The rules stated in this section are limited by the exceptions contained in sections 90.14, and 90.15 of these regulations.

(a) *General rule:* No person in the United states shall, on the basis of age, be excluded from participation in, be denied the benefits of, or be subjected to discrimination under, any program or activity receiving Federal financial assistance.

(b) *Specific rules:* A recipient may not, in any program or activity receiving Federal financial assistance, directly or through contractual, licensing, or other arrangements use age distinctions or take any other actions which have the effect, on the basis of age, of:

(1) excluding individuals from, denying them the benefits of, or subjecting them to discrimination under, a program or activity receiving Federal financial assistance, or

(2) Denying or limiting individuals in their opportunity to participate in any program or activity receiving Federal financial assistance.

(c) The specific forms of age discrimination listed in paragraph (b) of this section do not necessarily constitute a complete list.

§ 90.13 Definitions of "normal operation" and "statutory objective."

For purposes of sections 90.14, and 90.15, the terms "normal operation" and "statutory objective" shall have the following meaning:

(a) "Normal operation" means the operation of a program or activity without significant changes that would impair its ability to meet its objectives.

(b) "Statutory objective" means any purpose of a program or activity expressly

stated in any Federal statute, State statute, or local statute or ordinance adopted by an elected, general purpose legislative body.

§ 90.14 Exceptions to the rules against age discrimination. Normal operation or statutory objective of any program or activity.

A recipient is permitted to take an action, otherwise prohibited by section 90.12, if the action reasonably takes into account age as a factor necessary to the normal operation or the achievement of any statutory objective of a program or activity. An action reasonably takes into account age as a factor necessary to the normal operation or the achievement of any statutory objective of a program or activity, if:

(a) Age is used as a measure or approximation of one or more other characteristics; and

(b) The other characteristic(s) must be measured or approximated in order for the normal operation of the program or activity to continue, or to achieve any statutory objective of the program or activity; and

(c) The other characteristic(s) can be reasonably measured or approximated by the use of age; and

(d) The other characteristic(s) are impractical to measure directly on an individual basis.

§ 90.15 Exceptions to the rules against age discrimination. Reasonable factors other than age.

A recipient is permitted to take an action otherwise prohibited by section 90.12 which is based on a factor other than age, even though that action may have a disproportionate effect on persons of different ages. An action may be based on a factor other than age only if the factor bears a direct and substantial relationship to the normal operation of the program or activity or to the achievement of a statutory objective.

§ 90.16 Burden of proof.

The burden of proving that an age distinction or other action falls within the exceptions outlined in sections 90.14 and 90.15 is on the recipient of Federal financial assistance.

Appendix D

PART 1606—GUIDELINES ON DISCRIMINATION BECAUSE OF NATIONAL ORIGIN

§ 1606.1 Guidelines on discrimination because of national origin.

(a) The Commission is aware of the widespread practices of discrimination on the basis of national origin, and intends to apply to the full force of law to eliminate such discrimination. The bona fide occupational qualification exception as it pertains to national origin cases shall be strictly construed.

(b) Title VII is intended to eliminate covert as well as the overt practices of discrimination, and the Commission will, therefore, examine with particular concern cases where persons within the jursidiction of the Commission have been denied equal employment opportunity for reasons which are grounded in national origin considerations. Examples of cases of this character which have come to the attention of the Commission include: The use of tests in the English language where the individual tested came from circumstances where English was not that person's first language or mother tongue, and where English language skill is not a requirement of the work to be performed; denial of equal opportunity to persons married to or associated with persons of a specific national origin; denial of equal opportunity because of membership in lawful organizations identified with or seeking to promote the interests of national groups; denial of equal opportunity because of attendance at schools or churches commonly utilized by persons of a given national origin; denial of equal opportunity because their name or that of their spouse reflects a certain national origin, and denial of equal opportunity to persons who as a class of persons tend to fall outside national norms for height and weight where such height and weight specifications are not necessary for the performance of the work involved.

(c) Title VII of the Civil Rights Act of 1964 protects all individuals, both citizen and noncitizens, domiciled or residing in the United States, against discrimination on the basis of race, color, religion, sex, or national origin.

(d) Where discrimination on the basis of citizenship against a lawfully immigrated alien residing in the United States has the purpose or effect of discriminating against persons of a particular national origin, such person may not be discriminated against on the basis of citizenship, except that it is not an unlawful employment practice for an employer pursuant to section 703(g), to refuse to employ any person who does not fulfill the requirements imposed in the interests of national security pursuant to any statute of the United States or any Executive Order of the President respecting the particular position or the particular premises in question.

(e) In addition, some states have enacted laws prohibiting the employment of noncitizens. Where such laws have the purpose or effect of discriminating on the basis of national origin, they are in conflict with and are, therefore, superseded by title VII of the Civil Rights Act of 1964, as amended.

(Sec. 713(a), 78 Stat. 265; 42 U.S.C. 2000e-12)

Appendix E

(From the Federal Register of Friday, September 14, 1979.)

EQUAL EMPLOYMENT OPPORTUNITY COMMISSION

29 CFR Part 1605

Proposed Guidelines on Discrimination Because of Religion

AGENCY: Equal Employment Opportunity Commission.

ACTION: Proposed Guidelines.

SUMMARY: The Equal Employment Opportunity Commission is proposing a revision of its Guidelines on Discrimination Because of Religion. We are taking this action in response to the public confusion concerning the duty of employers and labor organizations to provide reasonable accommodation for the religious practices of employees or prospective employees. If adopted, these Guidelines will clarify this duty and thereby prevent an employee or prospective employee from being discriminated against and unnecessarily penalized because of his or her religious practices.

DATES: Comments must be received on or before December 13, 1979.

ADDRESSES: Address all comments to: Marie D. Wilson, Executive Officer, Executive Secretariat, Equal Employment Opportunity Commission, 2401 E Street NW., Washington, D.C. 20506.

FOR FURTHER INFORMATION CONTACT: Frederick D. Dorsey, Director, Office of Policy Implementation, Room 4002, EEOC, 2401 E Street NW., Washington, D.C. 20506, (202) 634-7060.

SUPPLEMENTARY INFORMATION: Section 701(j) of Title VII of the Civil Rights Act of 1964, as amended creates an obligation to provide reasonable accommodation for the religious practices of an employee or prospective employee, unless to do so would create an undue hardship. In 1977, the Supreme Court rendered its decision in *Trans World Airlines, Inc.* v. *Hardison*, 432 U.S. 63 (1977). The Court's interpretation of an undue hardship led to much confusion in the employment sector. It left employers, employees and labor organizations unclear as to the extent of the statutory duty under Title VII to provide reasonable accommodation for the religious practices of an employee or prospective employee. The Commission held public informational hearings on this issue in April and May of 1978 in New York City, Los Angeles and Milwaukee. To allow interested persons an opportunity to participate in all stages of its rulemaking process and in compliance with Executive Order 12044, Improving Government Regulations (43 FR 12661, March 24, 1978), the Commission published its intent to review its current *Guidelines on Discrimination Because of Religion* (44 FR 6200, January 31, 1979). The purpose of this review was to determine if any changes in the Guidelines were needed based on the information obtained from the Commission's informational hearings.

After this information was studied, the Commission considered several alternatives among which were: (1) The Commission could seek new legislation; (2) the Commission could publish the transcript of the hearings and then employers could develop solutions from the information obtained at the hearings; (3) the Commission could rely on its existing Guidelines; (4) the Commission could revise its Guidelines or; (5) the Commission could revise its Guidelines and publish the transcript of the hearings.

The last alternative was selected because the hearings established that many people desired clarification of the Guidelines and that many employers had developed alternative employment practices for accommodating the religious practices of employees and prospective employees which

could be of use generally. A transcript of the hearings will be available for purchase after October 15, 1979.

One issue repeatedly raised during the hearings concerned the use of pre-selection inquiries into an applicant's availability to work during an employer's scheduled hours. Many employers—especially employers who operate on shifts or 7 days a week—ask applicants if they are available to work all of the scheduled working hours even though the applicant would only be working some of those hours. The employer then often excludes any applicants who are not available at all the specified times. This procedure prevents many applicants, who are not available at all times because of their religious practices, from being employed even before the employer determines whether or not it could accommodate the applicant without an undue hardship to its business. The Commission has developed one solution to this problem (at footnote 10) which would enable the employer to determine the majority of hours when all the applicants would be available, while deferring until after the position is offered determination of the times when individuals cannot be available because of religious practices. The Commission asks the public to comment on this solution and to suggest other alternatives.

These Guidelines are a significant regulation under Executive Order 12044. Their purpose is to clarify the Commission's current *Guidelines on Discrimination Because of Religion*. There are no regulatory burdens or recordkeeping requirements necessary for compliance with the Guidelines. The Commission has determined that they would not have a major economic impact on the economy and that a regulatory analysis is not necessary.

In compliance with Executive Order 12067 (43 FR 28967, July 5, 1978), the Commission has consulted during the drafting stage with representatives of the Department of Justice, Department of Labor, Department of Treasury and the Office of Personnel Managment. As a result of this coordination and cooperation, the Commission and the above agencies have developed these proposed Guidelines. At the end of the 90 day comment period, the Commission will continue to consult with these agencies on issues raised through the public comment process. The Commission and these agencies will then issue final Guidelines. Each agency may decide if additional provisions are necessary under its specific statutory authority.

Signed at Washington this 11th day of September 1979.

For the Commission.

Eleanor Holmes Norton.

Chair.

Accordingly, it is proposed to amend 29 CFR Chapter XIV by revising Part 1605 to read as follows:

PART 1605—GUIDELINES ON DISCRIMINATION BECAUSE OF RELIGION

Sec.
1605.1 "Religious" nature of a practice or belief.
1605.2 Reasonable accommodation without undue hardship as required by section 701(j) of Title VII of the Civil Rights Act of 1964.
Appendix A to § 1605.2 Background information.

Authority: Sec. 713(a), 78 Stat. 265; 42 U.S.C. 2000e-12.

§ 1605.1 "Religious" nature of a practice [1] or belief.

In most cases whether or not a practice or belief is religious is not at issue. However, in those cases in which the issue does exist, the Commission will define religious practices to include moral or ethical beliefs as to what is right and wrong which are sincerely held with the strength of traditional religious views. This standard was developed in *United States* v. *Seeger*, 380 U.S. 163 (1965) and *Welsh* v. *United States*, 398 U.S. 333 (1970). The Commission has consistently applied this standard in its decisions.[2] The fact that no religious group espouses such beliefs or the fact that the religious group to which the individual professes to belong may not accept such belief will not determine whether the belief is a religious belief of the employee or prospective employee.

§ 1605.2 Reasonable accommodation without undue hardship as required by section 701(j) of title VII of the Civil Rights Act of 1964.[3]

(a) *Purpose of This Section.* This section clarifies the obligation imposed by Title VII of the Civil Rights Act of 1964, as amended, (sections 701(j), 703 and 717) to accommodate the religious practices of employees and prospective employees. This section does not address other obligations under Title VII not to discriminate on grounds of religion, nor other provisions of Title VII.[4] The legal principles which have been developed with respect to other aspects of discrimination prohibited by Title VII on the bases of race, color, sex, and national origin also apply to religious discrimination in all circumstances other than where an accommodation is required.

(b) *Duty to Accommodate.* (1) Section 701(j) makes it an unlawful employment practice under § 703(a)(1) for an employer to fail to reasonably accommodate the religious practices and beliefs of an employee or prospective employee, unless the employer demonstrates that accommodation would result in undue hardship on the conduct of its business.[5] Section 701(j) in conjunction with § 703(c), imposes an obligation on a labor organization to reasonably accommodate the religious practices and beliefs of an employee or prospective employee, unless the labor organization demonstrates that accommodation would result in undue hardship.[6]

(2) After an employee or prospective employee notifies the employer or labor organization of his or her need for a religious accommodation, the employer or labor organization has an obligation to explore all possible methods of reasonable accommodation. A refusal to accommodate is justified only when an employer or labor organization can demonstrate that an undue hardship would in fact result from each alternative. A mere assumption that many more people, with the same beliefs as the person being accommodated, may also need accommodation is not evidence of undue hardship.

(c) *Alternatives for Accommodating Religious Practices.* (1) Employees and prospective employees most frequently request an accommodation because their religious practices conflict with their work schedules. The following subsections are some means of accommodating the conflict between work schedules and religious practices which the Commission believes that employers and labor organizations must explore as part of the obligation to accommodate. These are not intended to be all-inclusive. There are often other alternatives which would reasonably accommodate an individual's religious practices when they conflict with a work schedule. There are also employment practices besides work scheduling which may conflict with religious practices and cause an individual to request an accommodation. See, for example, the Commission's finding number (3) from its Hearings on Religious Discrimination, in Appendix A to § 1605.2. The principles expressed in these guidelines apply as well to such requests for accommodation.

(2) Some alternatives for accommodating an individual's religious practices could, to various degrees, disadvantage the individual in terms of wages, desirability of position, or career opportunities. The obligation to provide equal employment opportunity to the extent possible, irrespective of religious beliefs, requires that employers and labor organizations adopt the alternative which least disadvantages the individual requiring the accommodation.

---

[1] The word "practice" as used in these guidelines means "observance and practice, as well as belief", as stated in section 701(j), 42 U.S.C. 2000e(j).

[2] See CD 76-104 (1976), CCH ¶ 6500; CD 71-2620 (1971), CCH ¶ 6283; CD 71-779 (1970), CCH ¶ 6160.

[3] Section 701(j), 42 U.S.C. 2000e(j) states: "The term 'religion' includes all aspects of religious observance and practice, as well as belief, unless an employer demonstrates that he is unable to reasonably accommodate an employee's or prospective employee's religious observance or practice without undue hardship on the conduct of the employer's business."

[4] This section is not intended to limit any additional obligations to accommodate religious practices which may exist pursuant to constitutonal, statutory or executive order provisions such as E.O. 11246; neither is it intended to provide guidance for statutes which require accommodation on bases other than religion such as § 503 of the Rehabilitation Act of 1973.

[5] See *Trans World Airlines, Inc.* v. *Hardison*, 432 U.S. 63, 74 (1977).

[6] Section 1605.2 is primarily directed to obligations of employers or labor organizations, which are the entities covered by Title VII that will most often be required to make an accommodation. However, the principles of § 1605.2 also apply when an accommodation can be required of other entities covered by Title VII, such as an employment agency (§ 703(b)) or a joint labor-management committee controlling apprenticeship or other training or retraining (§ 703(d)). See, for example, § 1605.2(e)(1) "Scheduling of Tests or Other Selection Procedures."

(i) *Voluntary Substitutes.* Reasonable accommodation without undue hardship is possible where a satisfactory voluntary substitute is available. In a number of cases, the securing of a substitute has been left entirely up to the individual seeking the accommodation. The Commission believes that the obligation to accommodate requires that employers and labor organizations do everything possible to facilitate the securing of a satisfactory voluntary substitute. Some means of doing this which would not involve substantial cost are: to publicize policies regarding accommodation and substitution; to promote an atmosphere in which such substitutions are favorably regarded; to provide a central file, bulletin board or other means for matching voluntary substitutes with positions for which substitutes are needed.

(ii) *Flexible Scheduling.* One means of providing reasonable accommodation for the religious practices of employees or prospective employees which employers and labor organizations must explore is the creation of a flexible work schedule. The following list is an example of areas in which flexibility might be introduced: Flexible arrival and departure times; floating or optional holidays; flexible work breaks; use of lunch time in exchange for early departure; staggered work hours; and permitting an employee to make up time lost due to the observance of religious practices.[7]

(iii) *Lateral Transfer and Change of Job Assignments.* When an employee cannot be accommodated either as to his or her entire job or an assignment within the job, employers and labor organizations must consider whether or not it is possible to change the job assignment to give the employee a lateral transfer.

(iv) *Payment of Dues to a Labor Organization.* Some collective bargaining agreements include a provision that each employee must join the labor organization or pay the labor organization a sum equivalent to dues. When an employee's religious practices do not permit compliance with such a provision, the labor organization must accommodate the employee by permitting him or her to donate a sum equivalent to dues to a charitable organization other than one associated with the employee's religion.[8]

(d) *Undue Hardship.*— (1) *Cost.* In the *Hardison* decision, the Court indicated that it would be an undue hardship on an employer if it is forced to bear "more than a *de minimis* cost" in order to accommodate an employee's need to be absent from his or her scheduled duty hours. 432 U.S. at 84. Interpretation of "more than a *de minimis* cost" has to be made on a case by case basis with due regard given to the identifiable cost in relation to the size and operating cost of the employer, and the number of individuals who will in fact need a particular accommodation. In general, the Commission interprets this phrase as it was used in the *Hardison* decision to mean that costs similar to the regular payment of premium wages of substitutes, which was at issue in *Hardison*, would constitute undue hardship. However, the infrequent payment of premium wages for a substitute or the payment of premium wages while a more permanent accommodation is being sought are costs which an employer can be required to bear as a means of providing a reasonable accommodation. In most circumstances an employer can also be required to pay administrative costs necessary for providing the accommodation, such as those costs involved in rearranging schedules and recording substitutions for payroll purposes.

(2) *Seniority Rights.* the *Hardison* decision also indicated that it would be undue hardship to require a variance from a seniority system in order to accommodate an employee's religious practices when doing so would deny another employee his or her shift preference guaranteed by that system. 432 U.S. at 80. The Commission believes that arrangements for voluntary substitutes (see paragraph (c)(1) of this section do not interfere with legitimate expectations founded on a seniority system.

(e) *Selection Practices.*— (1) *Scheduling of Tests or Other Selection Procedures*

When a test or other selection procedure is scheduled at a time when an employee or prospective employee cannot attend because of his or her religious practices, the user of the test should be aware that the principles enunciated in these guidelines apply and that it has an obligation to accommodate such employee or prospective employee unless undue hardship would result.

(2) *Inquiries Which Determine An Applicant's Availability to Work During An Employer's Scheduled Working Hours.* (i) The duty to accommodate pertains to prospective employees as well as current employees. Consequently, an employer may not permit an applicant's need for a religious accommodation to affect in any way its decision whether to hire the applicant unless it can demonstrate that it cannot reasonably accommodate the applicant's religious practices without undue hardship. When an employer inquires into an applicant's availability to work during its scheduled working hours prior to making a decision whether to hire the applicant, there is a danger that the employer will deny the position to an applicant requiring an accommodation in order to avoid having to make any effort to accommodate the applicant, even though an accommodation without undue hardship is possible. There is also a danger that many selecting officials will not be able to objectively evaluate an applicant when they know the applicant will require an accommodation, especially when the official is selecting from among similarly qualified applicants. When the need for an accommodation affects a decision to reject an applicant, the applicant will usually be unaware of this fact; even if the applicant suspects that the rejection was based on the need for a religious accommodation, the applicant will find it difficult to prove. Awareness of employer attitudes toward accommodation, and of the difficulty of challenging a rejection because of a need for an accommodation, discourages applicants from applying to employers who make pre-selection inquiries into availability.[9]

(ii) Therefore, because pre-selection inquiries concerning availability have the effect of excluding persons of certain religious beliefs, an employer must justify such inquiries by business necessity. Employers who believe they have a legitimate interest in knowing the availability of their applicants prior to selection must consider procedures which would serve this interest without excluding persons whose religious practices need accommodation.[10]

(iii) The Commission will consider there to be *prima facie* evidence that the need for an accommodation influenced a decision to reject an applicant when: (A) Prior to selection the employer elicits information which would determine an applicant's need for a religious accommodation; (B) this procedure is not justified by business necessity; and (C) the employer rejects a qualified applicant after the employer has determined the applicant's need for an accommodation. The burden is then on the employer to demonstrate that factors other than the need for an accommodation were the reason for rejecting the qualified applicant, or that a reasonable accommodation without undue hardship was not possible.

Appendix A to § 1605.2—Background Information

In 1966, the Commission adopted guidelines on religious discrimination which stated that an employer had an obligation to accommodate the religious practices of its employees or prospective employees unless to do so would create a "serious inconvenience to the conduct of the business". 29 CFR 1605.1(a)(2), 31 FR 8370 (1966).

In 1967 the Commission revised these guidelines to state that an employer had an obligation to reasonably accommodate the religious practices of its employees or prospective employees, unless the employer could prove that to do so would create an "undue hardship". 29 CFR 1605.1(b)(c), 32 FR 10298.

In 1972, Congress amended Title VII to incorporate the obligation to accommodate expressed in the Commission's 1967 Guidelines by adding section 701(j).

In 1977, the United States Supreme Court issued its decision in the case of *Trans World*

[7] On September 29, 1978, Congress enacted such a provision for the accommodation of Federal employees' religious practices. See Public Law 95-390, 5 U.S.C. 5550a "Compensatory Time Off for Religious Observances."

[8] *Intn'l Ass'n of Machinist and Aerospace Workers* v. *Anderson*, F. 2d 397 (9th Cir. 1978); *cert denied* ——U.S.——, 47 L.W. 3738 (June 5, 1979).

[9] Evidence of these problems was submitted through oral and written testimony at the Commission's Hearings on Religious Discrimination.

[10] An example of such a procedure is for the employer to initially ask a question such as: "Apart from absences for religious observances will you be available for work at the following times?" Then, after a position is offered, the employer can inquire into the need for a religious accommodation and determine, according to the principles of these Guidelines, whether an accommodation is possible. This type of inquiry would provide an employer with information concerning the overwhelming majority of times when applicants will be available, while deferring until after a position is offered the identification of those times when the usually small number of applicants needing accommodation will not be available.

Airlines, Inc. v. *Hardison*, 432 U.S. 63 (1977). *Hardison* was brought under Section 703(a)(1) because it involved facts occurring before the enactment of Section 701(j). The Court applied the Commission's 1967 Guidelines, but indicated that the result would be the same under section 701(j). It stated that Trans World Airlines had made reasonable efforts to accommodate the religious needs of its employee, Hardison. The Court held that to require Trans World Airlines to make further attempts at accommodations—by unilaterally violating a seniority provision of the collective bargaining agreement, paying premium wages on a regular basis to another employee to replace Hardison, or creating a serious shortage of necessary employees in another department in order to replace Hardison—would create an undue hardship on the conduct of Trans World Airlines' business, and would therefore, exceed the duty to accommodate Hardison.

In 1978, the Commission conducted public hearings on religious discrimination in New York City, Milwaukee, and Los Angeles in order to respond to the concerns raised by *Hardison*. Approximately 150 witnesses testified or submitted written statements.[11] The witnesses included employers, employees, representatives of religious and labor organizations and representatives of Federal, State and local governments.

The Commission found from the hearings that:

(1) There is widespread confusion concerning the extent of accommodation under the *Hardison* decision.

(2) The religious practices of some individuals and some groups of individuals are not being accommodated.

(3) Some of those practices which are not being accommodated are:

—Observance of a Sabbath or religious holidays;

—Need for prayer break during working hours;

—Practice of following certain dietary requirements;

—Practice of not working during a mourning period for a deceased relative;

—Prohibition against medical examinations;

—Prohibition against membership in labor and other organizations; and

—Practices concerning dress and other personal grooming habits.

(4) Many of the employers who testified had developed alternative employment practices which accomodate the religious practices of employees and prospective employees and which meet the employer's business needs.

(5) Little evidence was submitted by employers which showed actual attempts to accommodate religious practices with resultant unfavorable consequences to the employer's business. Employers appeared to have substantial anticipatory concerns but no, or very little, actual experience with the problems they theorized would emerge by providing reasonable accommodation for religious practices.

Based on these findings, the Commission is revising its Guidelines to clarify the obligation imposed by Section 701(j) to accommodate the religious practices of employees and prospective employees.

Appendix F

(From the Federal Register of Friday, January 19, 1979.)

Title 29—Labor

CHAPTER XIV—EQUAL EMPLOYMENT OPPORTUNITY COMMISSION

PART 1608—AFFIRMATIVE ACTION APPROPRIATE UNDER TITLE VII OF THE CIVIL RIGHTS ACT OF 1964, AS AMENDED

Adoption of Interpretative Guidelines

AGENCY: Equal Employment Opportunity Commission.

ACTION: Adoption of final Guidelines on Affirmative Action appropriate under Title VII of the Civil Rights Act of 1964, as amended.

SUMMARY: The Equal Employment Opportunity Commission wishes to encourage voluntary action to eliminate employment discrimination, and hereby publishes its final Guidelines on Affirmative Action. Proposed Guidelines were published on December 28, 1977 (42 FR 64,826) for public comment. The Commission has now analyzed those comments and taken them into consideration in preparing its final Guidelines. The Preamble, below, describes the Commission's purpose for issuing these Guidelines and explains how the issues raised by the comments have been addressed. These Guidelines clarify the kinds of voluntary actions that are appropriate under Federal law. They describe the action the Commission will take when the procedures outlined herein have been followed. By elucidating the standards for voluntary action in these Guidelines, the Commission encourages affirmative action without resort to litigation.

EFFECTIVE DATE: February 20, 1979.

FOR FURTHER INFORMATION CONTACT:

Peter C. Robertson, Director, Office of Policy Implementation, Room 4002A, 2401 E Street, N.W., Washington, D.C. 20506, (202) 254-7669, 634-7060.

SUPPLEMENTARY INFORMATION:

An Overview of the Guidelines on Affirmative Action

The Equal Employment Opportunity Commission ("EEOC", "the Commission") enforces Title VII of the Civil Rights Act of 1964, as amended, ("Title VII," "the Act"), which makes it illegal to discriminate in employment on the basis of race, color, religion, sex, or national origin. The Act requires the Commission to investigate complaints and attempt to correct violations it discovers, informally and through conciliation, or, if necessary, through court action. The Act also authorizes private individuals to bring lawsuits if their complaints are not resolved to their satisfaction or within the statutory time period.

Since the enactment of Title VII of the Civil Rights Act of 1964, many employers, labor organizations, and other persons subject to the Act have altered employment systems to implement the purposes of Title VII by improving employment opportunities for previously excluded groups. Because of what Congress has called the "complex and pervasive" nature of systemic discrimination against minorities and women (see H.R. Rep. No. 92-238, 92nd Cong., 2nd Sess. 8 (1972)), these voluntary efforts often involve significant changes in employment relationships. Some of these actions have been challenged under Title VII, as conflicting with statutory language requiring that employment decisions not be based on race, color, religion, sex, or national origin considerations. Accordingly, the Commission believes it is important to announce the legal principles which govern voluntary affirmative action under Title VII and other employment discrimination laws, so that persons subject to the Act have appropriate guidance. These Guidelines constitute the Commission's interpretation of Title VII, harmonizing the need to eliminate and prevent discrimination and to correct the effects of prior discrimination with the need to protect all individuals from discrimination on the basis of race, color, religion, sex, or national origin.

Requests for guidance have been received by the Commission from persons subject to Title VII concerning the relationship between affirmative action and so-called "reverse discrimination." There is no separate concept under Title VII of "reverse discrimination." Discrimination against all individuals because of race, color, religion, sex, or national origin is illegal under Title VII. *McDonald* v. *Sante Fe Trail Transportation Co.*, 427 U.S. 273 (1976).

To clarify the relationship between affirmative action and a countervailing claim of discrimination, a new section 1608.1 of these Guidelines sets forth the historical and legislative foundation for the Commission's interpretation of Title VII. Section 1608.1(b) explains that Congress enacted Title VII in order to overcome the effects of past and present employment practices which are part of a larger pattern of restriction, exclusion, discrimination, segregation and inferior treatment of minorities and women in many areas of life. Congress sought to accomplish this objective by establishing a national policy against discrimination in employment and encouraging voluntary affirmative action to eliminate barriers to equal employment opportunity. It is the Commission's interpretation that appropriate voluntary affirmative action, or affirmative action pursuant to an administrative or judicial requirement, does not constitute unlawful discrimination in violation of the Act.

It is essential to the effective implementation of Title VII that those who take appropriate voluntary affirmative action receive adequate protection against claims that their efforts constitute discrimination.

[11] The transcript of the Commission's Hearings on Religious Discrimination can be examined by the public at: The Equal Employment Opportunity Commission, 2401 E Street NW., Washington, D.C. 20506.

This transcript will be published by the Government Printing Office and available for purchase on approximately October 15, 1979.

The term affirmative action means those actions appropriate to overcome the effects of past or present practices, policies, or other barriers to equal employment opportunity. Section 1608.3 of these Guidelines identifies circumstances in which voluntary affirmative action is permissible under Title VII. When such circumstances exist, and a plan or program otherwise complies with these Guidelines, the Commission will find that there is no reasonable cause to believe that the affirmative action plan or program violates Title VII. See § 1608.10(a). In addition, § 1608.10(b) provides that where the plan or program is in writing and was adopted in good faith, in conformity with, and in reliance upon these Guidelines, the Commission will provide the protection authorized under section 713(b)(1) of Title VII to the employer, labor organization, or other person taking the action. See *EEOC* v. *AT&T*, 419 F. Supp. 1022, 1055, n. 34 (E.D.Pa. 1976), *aff'd*, 556 F.2d 167 (3rd Cir. 1977), *cert. denied*, 98 S.Ct. 3145 (1978).

On December 28, 1977, at 42 FR 64826 the Commission published proposed "Guidelines on Remedial and/or Affirmative Action" in the Federal Register and invited comments from the public. Comments were received from almost 500 individuals and organizations. The paragraphs below summarize the major issues raised by the comments and indicate the way in which the final Guidelines address the concerns raised by the comments.

On December 11, 1978, the Commission voted to approve the Guidelines in final form. Pursuant to Executive Order 12067, the Guidelines were then distributed to all Federal agencies for their review. Comments received in this process are also reflected in the discussion below.

I. Change of Guidelines' Title

The proposed Guidelines were titled "Proposed Guidelines on Affirmative and/or Remedial Action" and the phrase "remedial and/or affirmative action" was utilized throughout the document. A number of comments questioned the difference, if any, between remedial action and affirmative action. The term "remedial" has been dropped because of the possible erroneous implication that a violation of the law was required before affirmative action could be taken.

II. The Commission Will Process Complaints Alleging Discrimination Against Any Aggrieved Person

Many of the comments interpreted the Guidelines as indicating a Commission position that whites or males are entitled to less protection against discrimination than minorities or females, and that the Commission would either ignore complaints filed by whites or males, or process them in a different manner from those filed by females and minorities. The Commission maintains its position, articulated prior to *McDonald* v. *Santa Fe Trail Transportation Co.*, 427 U.S. 273 (1976), that discrimination on the basis of race, color, religion, sex, or national origin, is prohibited under Title VII, regardless of the individual or class against whom such discrimination is directed. See, e.g., Commission Decision No. 74-31, 7 FEP Cases 1326, 1328, CCH EEOC Decisions, ¶6404, (1973). The Commission will follow the same procedures in processing complaints filed by all individuals, regardless of their race, color, religion, sex, or national origin.

To avoid any ambiguity on these issues, language in the proposed Guidelines suggesting that complaints filed by whites and males would be "dismissed" under certain circumstances has been amended. Proposed paragraph V stated that the Commission would "issue a notice of dismissal of the charge" when an affirmative action program conformed to the Guidelines' requirements. The word "dismissal" is a term of art used by the Commission in its procedural regulations to refer to all determinations other than "reasonable cause." Because its use was misconstrued in many comments, final sections have been amended by substituting the phrase "a determination of no reasonable cause" where such a finding is justified by the facts of the case.

III. Consideration of Race, Color, Religion, Sex, and National Origin in Employment Decisions

Some commentators objected to the draft Guidelines because of their belief that Title VII requires that all employment decisions be made without consideration of race, color, religion, sex, or national origin, regardless of the circumstances. This conclusion does not comport with United States Supreme Court decisions interpreting Title VII, nor with the recent decision in *Regents of the University of California* v. *Bakke*, 98 S. Ct. 2733 (1978) (discussed infra). In the Title VII cases, the Supreme Court has called upon employers "'* * * to self-examine and to self-evaluate their employment practices and to endeavor to eliminate, so far as possible, the last vestiges of an unfortunate and ignominious page in this country's history.'" *Albemarle Paper Co.* v. *Moody*, 422 U.S. 405, 418 (1975). See also, *Griggs* v. *Duke Power Co.*, 401 U.S. 424 (1971).

Thus, the Supreme Court recognizes that persons subject to Title VII will consider race, sex and national origin in their analyses and evaluations. In addition, the Court has emphasized the concept of conciliation and voluntary action rather than litigation as the primary method of enforcing Title VII. See *Occidental Life Insurance Co. of California* v. *EEOC*, 432 U.S. 355 (1977). Voluntary action necessarily implies latitude to make a reasonable judgement as to whether action should be taken and the nature of such action.

At the same time, the Commission recognizes that considerations of race, color, religion, sex, and national origin are not permissible in other contexts. For example, in *McDonald* v. *Santa Fe Trail Transportation Co.*, 427 U.S. 273 (1976), the Court held that the antidiscrimination principle of Title VII could be invoked by white employees as well as minority employees. No question of affirmative action was involved. The Court held that disparate treatment violated Title VII, but specifically stated that its decision did not address any issues relating to affirmative action programs. *McDonald*, *supra*, at 280, n. 8. For the reasons set forth in § 1608.1, the Commission considers that these Guidelines are consistent with the statute, the Congressional intent behind it, and the decisions of the Supreme Court.

IV. Two Different Justifications of Voluntary Action: The Relationship Betweeen Title VII and Executive Order No. 11246, As Amended

A number of comments indicated uncertainty as to the relationship in the proposed Guidelines between the references to Title VII and the references to the Executive Order. These commentators apparently understood the Guidelines to mean that affirmative action required by Executive Order No. 11246, as amended, and its implementing regulations would be lawful under Title VII *only* where the contractor has a reasonable basis for concluding that such action is necessary under Title VII. The structure of the Guidelines has been changed to clarify the Commission's original interpretation that action taken pursuant to, and in conformity with the Executive order, as amended, and its implementing regulations, does not violate Title VII.

The legislative history of the Equal Employment Opportunity Act of 1972 shows that Congress repeatedly rejected limitations on affirmative action under the Executive Order, including the goals and timetables approach that had become by that time a central feature of the implementation of the Order. See, e.g., 118 Cong. Rec. 1385-1386 (1972) (remarks of Sen. Saxbe); 118 Cong. Rec. 1664-1665 (1972) (remarks of Sen. Javits); 118 Cong. Rec. 1676 (1972) (rejecting amendment offered by Sens. Allen and Ervin that would have prohibited requirements for certain types of affirmative action, including the goals approach, under the Executive Order); 118 Cong. Rec. 4918 (1972) (rejecting amendment offered by Sen. Ervin that would have applied section 703(j) of Title VII to the Executive Order).

The Commission concludes that Congress intended to permit the continuation of the Executive Order program which required affirmative action by government contractors. The Congress which acted to allow the Executive Order program to continue would not, in the same measure, invalidate it under Title VII. The statute should be construed to avoid such a contradictory conclusion, especially where such a conclusion would undermine the expressed Congressional purpose of opening employment opportunities to minorities and women who had in the past been denied such opportunities.

In the Equal Employment Opportunity Act of 1972, Congress recognized the contractor's right to rely on affirmative action plans that had been approved under the Executive Order. See section 718 of Title VII. Furthermore, Congress in section 715 established the Equal Employment Opportunity Coordinating Council (composed of the Secretary of Labor, the Chair of the EEOC, the Attorney General, the Chair of the U.S. Civil Service Commission, the Chair of the U.S. Commission on Civil Rights, or their respective delegates) "to minimize effort, promote efficiency, and eliminate conflict, competition, duplication and inconsistency among * * * branches of the Federal

Government responsible for the implementation and enforcement of equal opportunity legislation, orders, and policies." 42 U.S.C. 2000e-14. This coordination responsibility now rests in the Commission by virtue of 5 U.S.C. 901 et seq., as applied by Reorganization Plan No. 1 (1978), which was implemented by Executive Order 12067 (43 FR 28,967, July 30, 1978). In order to achieve the objectives of section 715 and Executive Order No. 12067, the Commission concludes that it must recognize compliance with the requirements of Executive Order No. 11246, as amended, and its implementing regulations, as a defense to a charge that the affirmative action compliance program is discriminatory. The Commission concludes that adherence to an affirmative action compliance program approved by an appropriate official of the Department of Labor or its authorized agencies is lawful under Title VII. This interpretation thus insures that government contractors will not be subject to inconsistent standards by the Equal Employment Opportunity Commission and the Office of Federal Contract Compliance Programs.

Thus, the Commission recognizes that affirmative action by government contractors may be lawful under Title VII for either of two distinct reasons: (a) Such efforts constitute reasonable action to implement the legislative purposes of Title VII, or (b) the action was taken pursuant to, and in conformity with Executive Order No. 11246, as amended, and its implementing regulations. The Guidelines have been revised to reflect these two independent justifications for affirmative action under Title VII. A separate § 1608.5 governs affirmative action under Executive Order No. 11246, as amended.

The three step analytical process required under § 1608.4,, when action is being justified under Title VII, is not necessary under § 1608.5, when action is being justified as undertaken pursuant to an approved program under Executive Order No. 11246, as amended. The circumstances in which such affirmative action is required under the Executive Order and the nature of such affirmative action are established by the Department of Labor.

V. Appropriate Steps for Taking Voluntary Action

A number of comments suggested that the Guidelines did not clearly define the steps the Commission believes are appropriate in taking voluntary affirmative action. A new § 1608.4 has been added to explain the three step process applicable to action justified under Title VII: reasonable self analysis, reasonable basis for concluding that action is appropriate, and reasonable action to correct that situation. The process set forth in § 1608.4 should be utilized to determine whether the circumstances set forth in § 1608.3 are present. Section 1608.5 covers action pursuant to Executive Order No. 11246, as amended.

VI. Reasonable Self Analysis

Some commentators requested further elaboration on the meaning of the term "self analysis." Section 1608.4(a) has been amended to make it clear that there is no single mandatory method of conducting the self analysis, and to refer to the methodology used by government contractors under Revised Order 4 as a model which employers and others may use in conducting a self analysis. Whatever method is used, the primary objective must be to determine whether the employment practices operate as barriers to equal employment opportunity.

Some commentators suggested that the Guidelines may be subject to abuse unless the self analysis is required to be in writing. The Commission believes that the protection from Title VII liability which may be available under section 713(b)(1) should only be recognized where the affirmative action plan or program has been carefully and consciously developed. Accordingly, the section 713(b)(1) defense will be recognized by the Commission only where the analysis and the affirmative action plan or program are in writing and are adopted in good faith, in conformity with, and in reliance upon these Guidelines. See §§ 1608.4(d) and 1608.10.

However, a respondent who has undertaken the analysis, self-evaluation, and development of an affirmative action plan of the type described in the Guidelines, but has not reduced the analysis and plan to writing, may assert these facts as a defense to a charge of discrimination. The analysis and plan need not be in writing because the Commission does not generally require that employer defenses be based on written documents. However, employers are encouraged to have written documentation since such written evidence would make it easier to establish that an analysis was conducted and that a plan or program exists. See § 1608.4(d)(2).

In response to comments which expressed concern that adoption of a plan or program might constitute an admission of discrimination, § 1608.4(d)(1) makes it clear that it is not necessary to state in writing the conclusion that a Title VII violation exists.

VII. The Guidelines Do Not Approve Inadequate Remedies

A number of commentators were concerned that violators of the Act could use the Guidelines and the section 713(b)(1) defense to shield themselves from liability for the underlying discrimination inadequately addressed by an affirmative action plan or program. The Guidelines do not lend themselves to this interpretation.

The proposed Guidelines stated in paragraph VII that the Guidelines were not intended to provide standards for determining whether voluntary action had fully remedied discrimination. The analysis and plan contemplated by these Guidelines will not establish whether discrimination existed before the plan was adopted. Furthermore, the plan cannot determine whether discrimination might take place subsequent to its adoption. In addition, the judgment as to whether affirmative action is sufficient to eliminate discrimination is a complex one which may take into account circumstances that may not have been included in the analysis which underlies the affirmative action plan. For these reasons the existence of the plan cannot provide the basis for determining whether discrimination existed, or whether the plan itself provided an adequate remedy for such discrimination. Therefore, the Guidelines state that they do not apply to a determination of the adequacy of an affirmative action plan to eliminate discrimination against previously excluded groups. Furthermore, the section 713(b)(1) defense is not involved in a determination of the adequacy of such a plan or program. Section 1608.11(a) is intended to make it clear that employers, labor organizations, or other persons who take affirmative action may still be liable under Title VII if the plan or program does not adequately remedy illegal discrimination.

VIII. No Admission of Discrimination Required

Another group of comments stated that, because the Guidelines do not require an admission or finding of discrimination, the Commission may thereby approve affirmative action which might constitute unlawful discrimination prohibited by Title VII. This interpretation is incorrect.

The proposed Guidelines stated in paragraph II that the lawfulness of affirmative action was not "dependent upon an admission, or a finding, or evidence sufficient to prove" that the person taking such action had actually violated Title VII. After careful analysis and consideration, the Commission is of the opinion that the statement, as amended, appearing in § 1608.4(b), represents an appropriate interpretation of Federal law and policy for the reasons set forth in § 1608.1(c).

These Guidelines provide a sufficient basis to determine whether affirmative action is appropriate. Persons subject to the Act should not, by taking reasonable affirmative action, be exposed to liability under the very Act they are seeking to implement. Similarly, the law should not force the employer or other person to speculate whether an arguable defense to a Title VII charge would be recognized by a court before taking affirmative action. Section 1608.4(b) makes it clear that this reasonable basis exists without regard to arguable defenses to a Title VII action.

IX. The Scope of Appropriate Voluntary Action

Several comments raised questions concerning the appropriate scope of voluntary affirmative action intended by the Guidelines. Some perceive the Commission's use of the words "ratios and other numerical remedies" in proposed Paragraph IV, in addition to the words "goals and timetables", as indicating that the Commission was endorsing "absolute quotas" or "fixed quotas" without regard to qualifications or the circumstances in which they were used. The words "ratios and other numerical remedies" have been omitted from these Guidelines in order to avoid ambiguity and to make it clear that any numerical objective is subject to the availability of sufficient applicants who are qualified by proper, validated standards.

Affirmative Action under these Guidelines must be reasonable and must be related to

the problems disclosed by the self-analysis. A new § 1608.4(c) has been added to make this clear. Affirmative action under these Guidelines may include interim goals or targets. Such interim goals or targets for previously excluded groups may be higher than the percentage of their availability in the workforce so that the long term goal may be met in a reasonable period of time. In order to achieve such interim goals or targets, an employer may consider race, sex, and/or national origin in making selections from among qualified or qualifiable applicants. Courts have ordered actions of this kind in litigated cases and in consent decrees. *Carter* v. *Gallagher*, 452 F.2d 315 (8th Cir. 1972), *en banc, cert. denied* (98 S. Ct. 3145 (1978); *U.S.* v. *Allegheny-Ludlum Industries, Inc.*, 517 F.2d 826 (5th Cir. 1975), *cert. denied*, 425 U.S. 944 (1976).

X. Relevance of Certain Court Cases

A number of comments indicated that there were court decisions rendering inappropriate the approach taken by the Commission in these Guidelines. Because the proposed Guidelines were issued for comment prior to the decision of the United States Supreme Court in the case of *Regents of University of California* v. *Bakke*, 98 S. Ct. 2733 (1978), a number of commentators suggested that either the Guidelines were inappropriate in light of the decision of the California Supreme Court in that case, or that the Commission should wait until the U.S. Supreme Court had issued its opinion. As recommended, the Commission awaited the action of the Supreme Court in that case before promulgating these Guidelines. The Commission has reviewed these Guidelines in light of the opinions of the Justices of the Supreme Court in *Bakke*. The Commission concludes that these Guidelines are consistent with the action of the Supreme Court in that case.

In the *Bakke* case the university did not assert reliance on any detailed guidance and procedures for crafting an affirmative action plan. These Guidelines seek to provide such guidance and thereby to establish an appropriate legal foundation for voluntary action under Title VII.

Perhaps the case most frequently cited by the commentators as conflicting with the principles articulated in the proposed Guidelines was a split decision in *Weber* v. *Kaiser Aluminum Corp.*, 563 F.2d 216 (5th Cir. 1977), *cert. granted*, —— U.S. ——. *Weber*, however, was decided prior to *Bakke*, and therefore did not take into account the opinions in that case. In addition, it is fundamentally unfair to expose those subject to Executive Order No. 11246 to risks of liability under Title VII when they act in compliance with government requirements or when they act voluntarily and appropriately to achieve statutory objectives. Furthermore, the clarification provided by these Guidelines is necessary because the *Weber* decision may be interpreted to unduly interfere with the range of affirmative action which Congress intended to permit under Title VII.[1]

The Commission has examined all the decisions brought to its attention in the comments and other recent decisions of the United States Supreme Court and concludes that none of these decisions affect its interpretation of the circumstances in which affirmative action is lawful under Title VII.

By virtue of the authority vested in it by section 713 of Title VII of the Civil Rights Act of 1964, as amended, 42 U.S.C. 2000e-12, 78 Stat. 265, and after due consideration of all comments received, the Equal Employment Opportunity Commission hereby issues as new Part 1608 of Title 29 of the Code of Federal Regulations its "Guidelines on Affirmative Action Appropriate Under Title VII of the Civil Rights Act of 1964, as Amended" as set forth below.

Signed at Washington, D.C., this 16th day of January 1979.

For the Commission.

Eleanor Holmes Norton,
Chair.

Sec.
1608.1 Statement of purpose.
1608.2 Written interpretation and opinion.
1608.3 Circumstances under which voluntary affirmative action is appropriate.
1608.4 Establishing affirmative action plans.
1608.5 Affirmative action compliance programs under executive order No. 11246, as amended.
1608.6 Affirmative action plans which are part of commission conciliation or settlement agreements.
1608.7 Affirmative action plans or programs under State or local law.
1608.8 Adherence to court order.
1608.9 Reliance on directions of other government agencies.
1608.10 Standard of review.
1608.11 Limitations on the application of these guidelines.
1608.12 Equal employment opportunity plans adopted pursuant to section 717 of title VII.

Authority: Sec. 713 of title VII of the Civil Rights Act of 1964, as amended, 42 U.S.C. 2000e-12, 78 Stat. 265.

§ 1608.1 Statement of purpose.

(a) *Need for Guidelines.* Since the passage of Title VII in 1964, many employers, labor organizations, and other persons subject to Title VII have changed their employment practices and systems to improve employment opportunities for minorities and women, and this must continue. These changes have been undertaken either on the initiative of the employer, labor organization, or other person subject to Title VII, or as a result of conciliation efforts under Title VII, action under Executive Order No. 11246, as amended, or under other Federal, state, or local laws, or litigation. Many decisions taken pursuant to affirmative action plans or programs have been race, sex, or national origin conscious in order to achieve the Congressional purpose of providing equal employment opportunity. Occasionally, these actions have been challenged as inconsistent with Title VII, because they took into account race, sex, or national origin. This is the so-called "reverse discrimination" claim. In such a situation, both the affirmative action undertaken to improve the conditions of minorities and women, and the objection to that action, are based upon the principles of Title VII. Any uncertainty as to the meaning and application of Title VII in such situations threatens the accomplishment of the clear Congressional intent to encourage voluntary affirmative action. The Commission believes that by the enactment of Title VII Congress did not intend to expose those who comply with the Act to charges that they are violating the very statute they are seeking to implement. Such a result would immobilize or reduce the efforts of many who would otherwise take action to improve the opportunities of minorities and women without litigation, thus frustrating the Congressional intent to encourage voluntary action and increasing the prospect of Title VII litigation. The Commission believes that it is now necessary to clarify and harmonize the principles of Title VII in order to achieve these Congressional objectives and protect those employers, labor organizations, and other persons who comply with the principles of Title VII.

(b) *Purposes of Title VII.* Congress enacted Title VII in order to improve the economic and social conditions of minorities and women by providing equality of opportunity in the work place. These conditions were part of a larger pattern of restriction, exclusion, discrimination, segregation, and inferior treatment of minorities and women in many areas of life.[2] The Legislative Histories of Title VII, the Equal Pay Act, and the Equal Employment Opportunity Act of 1972 contain extensive analyses of the higher unemployment rate, the lesser occupational status, and the consequent lower income levels of minorities and women.[3] The purpose of Executive Order No. 11246, as amended, is similar to the purpose of Title VII. In response to these economic and social conditions, Congress, by passage of Title VII, established a national policy against

[1] The Commission has taken the position that the decision of the Court of Appeals is incorrect and that the affirmative action program there was lawful. The Solicitor General has taken the same position, and the Supreme Court has now granted petitions for a writ of certiorari.

[2] Congress has also addressed these conditions in other laws, including the Equal Pay Act of 1963, Pub. L. 88-38, 77 Stat. 56 (1963), as amended; the other Titles of the Civil Rights Act of 1964, Pub. L. 88-352, 78 Stat. 241 (1964), as amended; the Voting Rights Act of 1965, Pub. L. 89-110, 79 Stat. 437 (1965), as amended; the Fair Housing Act of 1968, Pub. L. 90-284, Title VII, 82 Stat. 73, 81 (1968), as amended; the Educational Opportunity Act (Title IX), Pub. L. 92-318, 86 Stat. 373 (1972), as amended; and the Equal Employment Opportunity Act of 972, Pub. L. 92-261, 86 Stat. 103 (1972), as amended.

[3] Equal Pay Act of 1963: S. Rep. No. 176, 88th Cong., 1st Sess., 1-2 (1963). Civil Rights Act of 1964: H.R. Rep. No. 914, pt. 2, 88th Cong., 1st Sess. (1971). Equal Employment Opportunity Act of 1972: H.R. Rep. No. 92-238, 92d Cong., 1st Sess. (1971); S. Rep. No. 92-415, 92d Cong., 1st Sess. (1971). See also, Equal Employment Opportunity Commission, *Equal Employment Opportunity Report—1975, Job Patterns for Women in Private Industry* (1977); Equal Employment Opportunity Commission, *Minorities and Women in State and Local Government—1975* (1977); United States Commission on Civil Rights, *Social Indicators of Equality for Minorities and Women* (1978).

discrimination in employment on grounds of race, color, religion, sex, and national origin. In addition, Congress strongly encouraged employers, labor organizations, and other persons subject to Title VII (hereinafter referred to as "persons," see section 701(a) of the Act) to act on a voluntary basis to modify employment practices and systems which constituted barriers to equal employment opportunity, without awaiting litigation or formal government action. Conference, conciliation, and persuasion were the primary processes adopted by Congress in 1964, and reaffirmed in 1972, to achieve these objectives, with enforcement action through the courts or agencies as a supporting procedure where voluntary action did not take place and conciliation failed. See § 706 of Title VII.

(c) *Interpretation in furtherance of legislative purpose.* The principle of nondiscrimination in employment because of race, color, religion, sex, or national origin, and the principle that each person subject to Title VII should take voluntary action to correct the effects of past discrimination and to prevent present and future discrimination without awaiting litigation, are mutually consistent and interdependent methods of addressing social and economic conditions which precipitated the enactment of Title VII. Voluntary affirmative action to improve opportunities for minorities and women must be encouraged and protected in order to carry out the Congressional intent embodied in Title VII.[4] Affirmative action under these principles means those actions appropriate to overcome the effects of past or present practices, policies, or other barriers to equal employment opportunity. Such voluntary affirmative action cannot be measured by the standard of whether it would have been required had there been litigation, for this standard would undermine the legislative purpose of first encouraging voluntary action without litigation. Rather, persons subject to Title VII must be allowed flexibility in modifying employment systems and practices to comport with the purposes of Title VII. Correspondingly, Title VII must be construed to permit such voluntary action, and those taking such action should be afforded the protection against Title VII liability which the Commission is authorized to provide under section 713(b)(1).

(d) *Guidelines interpret Title VII and authorize use of Section 713(b)(1).* These Guidelines describe the circumstances in which persons subject to Title VII may take or agree upon action to improve employment opportunities of minorities and women, and describe the kinds of actions they may take which are consistent with Title VII. These Guidelines constitute the Commission's interpretation of Title VII and will be applied in the processing of claims of discrimination which involve voluntary affirmative action plans and programs. In addition, these Guidelines state the circumstances under which the Commission will recognize that a person subject to Title VII is entitled to assert that actions were taken "in good faith, in conformity with, and in reliance upon a written interpretation or opinion of the Commission," including reliance upon the interpretation and opinion contained in these Guidelines, and thereby invoke the protection of section 713(b)(1) of Title VII.

(e) *Review of existing plans recommended.* Only affirmative action plans or programs adopted in good faith, in conformity with, and in reliance upon these Guidelines can receive the full protection of these Guidelines, including the section 713(b)(1) defense. See § 1608.10. Therefore, persons subject to Title VII who have existing affirmative action plans, programs, or agreements are encouraged to review them in light of these Guidelines, to modify them to the extent necessary to comply with these Guidelines, and to readopt or reaffirm them.

§ 1608.2 Written interpretation and opinion.

These Guidelines constitute "a written interpretation and opinion" of the Equal Employment Opportunity Commission as that term is used in section 713(b)(1) of Title VII of the Civil Rights Act of 1964, as amended, 42 U.S.C. 2000e–12(b)(1), and section 1601.33 of the Procedural Regulations of the Equal Employment Opportunity Commission (29 CFR 1601.30; 42 FR 55,394 (October 14, 1977)). Section 713(b)(1) provides:

> In any action or proceeding based on any alleged unlawful employment practice, no person shall be subject to any liability or punishment for or on account of (1) the commission by such person of an unlawful employment practice if he pleads and proves that the act or omission complained of was in good faith, in conformity with, and in reliance on any written interpretation or opinion of the Commission * * *. Such a defense, if established, shall be a bar to the action or proceeding, notwithstanding that * * * after such act or omission, such interpretation or opinion is modified or rescinded or is determined by judicial authority to be invalid or of no legal effect * * *.

The applicability of these Guidelines is subject to the limitations on use set forth in § 1608.11.

§ 1608.3 Circumstances under which voluntary affirmative action is appropriate.

(a) *Adverse effect.* Title VII prohibits practices, procedures, or policies which have an adverse impact unless they are justified by business necessity. In addition, Title VII proscribes practices which "tend to deprive" persons of equal employment opportunities. Employers, labor organizations and other persons subject to Title VII may take affirmative action based on an analysis which reveals facts constituting actual or potential adverse impact, if such adverse impact is likely to result from existing or contemplated practices.

(b) *Effects of prior discriminatory practices.* Employers, labor organizations, or other persons subject to Title VII may also take affirmative action to correct the effects of prior discriminatory practices. The effects of prior discriminatory practices can be initially identified by a comparison between the employer's work force, or a part thereof, and an appropriate segment of the labor force.

(c) *Limited labor pool.* Because of historic restrictions by employers, labor organizations, and others, there are circumstances in which the available pool, particularly of qualified minorities and women, for employment or promotional opportunities is artificially limited. Employers, labor organizations, and other persons subject to Title VII may, and are encouraged to take affirmative action in such circumstances, including, but not limited to, the following:

(1) Training plans and programs, including on-the-job training, which emphasize providing minorities and women with the opportunity, skill, and experience necessary to perform the functions of skilled trades, crafts, or professions;

(2) Extensive and focused recruiting activity;

(3) Elimination of the adverse impact caused by unvalidated selection criteria (see sections 3 and 6, Uniform Guidelines on Employee Selection Procedures (1978), 43 FR 30,290; 38,297; 38,299 (August 25, 1978));

(4) Modification through collective bargaining where a labor organization represents employees, or unilaterally where one does not, of promotion and layoff procedures.

§ 1608.4 Establishing affirmative action plans.

An affirmative action plan or program under this section shall contain three elements: a reasonable self analysis; a reasonable basis for concluding action is appropriate; and reasonable action.

(a) *Reasonable self analysis.* The objective of a self analysis is to determine whether employment practices do, or tend to, exclude, disadvantage, restrict, or result in adverse impact or disparate treatment of previously excluded or restricted groups or leave uncorrected the effects of prior discrimination, and if so, to attempt to determine why. There is no mandatory method of conducting a self analysis. The employer may utilize techniques used in order to comply with Executive Order No. 11246, as amended, and its implementing regulations, including 41 CFR Part 60–2 (known as Revised Order 4), or related orders issued by the Office of Federal Contract Compliance Programs or its authorized agencies, or may use an analysis similar to that required under other Federal, state, or local laws or regulations prohibiting employment discrimination. In conducting a self analysis, the employer, labor organization, or other person subject to Title VII should be concerned with the effect on its employment practices of circumstances which may be the result of discrimination by other persons or institutions. See *Griggs* v. *Duke Power Co.*, 401 U.S. 424 (1971).

(b) *Reasonable basis.* If the self analysis shows that one or more employment practices: (1) Have or tend to have an adverse effect on employment opportunities

[4] Affirmative action often improves opportunities for all members of the workforce, as where affirmative action includes the posting of notices of job vacancies. Similarly, the integration of previously segregated jobs means that all workers will be provided opportunities to enter jobs previously restricted. See, e.g., *EEOC* v. *AT&T*, 419 F. Supp. 1022 (E.D.Pa. 1976), *aff'd*, 556 F. 2d 167 (3rd Cir. 1977), *cert. denied*, 98 S.Ct. 3145 (1978).

of members of previously excluded groups, or groups whose employment or promotional opportunities have been artificially limited, (2) leave uncorrected the effects of prior discrimination, or (3) result in disparate treatment, the person making the self analysis has a reasonable basis for concluding that action is appropriate. It is not necessary that the self analysis establish a violation of Title VII. This reasonable basis exists without any admission or formal finding that the person has violated Title VII, and without regard to whether there exists arguable defenses to a Title VII action.

(c) *Reasonable action.* The action taken pursuant to an affirmative action plan or program must be reasonable in relation to the problems disclosed by the self analysis. Such reasonable action may include goals and timetables or other appropriate employment tools which recognize the race, sex, or national origin of applicants or employees. It may include the adoption of practices which will eliminate the actual or potential adverse impact, disparate treatment, or effect or past discrimination by providing opportunities for members of groups which have been excluded, regardless of whether the persons benefited were themselves the victims of prior policies or procedures which produced the adverse impact or disparate treatment or which perpetuated past discrimination.

(1) *Illustrations of appropriate affirmative action.* Affirmative action plans or programs may include, but are not limited to, those described in the Equal Employment Opportunity Coordinating Council "Policy Statement on Affirmative Action Programs for State and Local Government Agencies," 41 FR 38,814 (September 13, 1976), reaffirmed and extended to all persons subject to Federal equal employment opportunity laws and orders, in the Uniform Guidelines on Employee Selection Procedures (1978) 43 FR 38,290; 38,300 (Aug. 25, 1978). That statement reads, in relevant part:

When an employer has reason to believe that its selection procedures have * * * exclusionary effect * * *, it should initiate affirmative steps to remedy the situation. Such steps, which in design and execution may be race, color, sex or ethnic 'conscious,' include, but are not limited to, the following:

The establishment of a long term goal and short range, interim goals and timetables for the specific job classifications, all of which should take into account the availability of basically qualified persons in the relevant job market;

A recruitment program designed to attract qualified members of the group in question;

A systematic effort to organize work and re-design jobs in ways that provide opportunities for persons lacking 'journeyman' level knowledge or skills to enter and, with appropriate training, to progress in a career field;

Revamping selection instruments or procedures which have not yet been validated in order to reduce or eliminate exclusionary effects on particular groups in particular job classifications;

The initiation of measures designed to assure that members of the affected group who are qualified to perform the job are included within the pool of persons from which the selecting official makes the selection;

A systematic effort to provide career advancement training, both classroom and on-the-job, to employees locked into dead end jobs; and

The establishment of a system for regularly monitoring the effectiveness of the particular affirmative action program, and procedures for making timely adjustments in this program where effectiveness is not demonstrated.

(2) *Standards of reasonable action.* In considering the reasonableness of a particular affirmative action plan or program, the Commission will generally apply the following standards:

(i) The plan should be tailored to solve the problems which were identified in the self analysis, see § 1608.4(a), supra, and to ensure that employment systems operate fairly in the future, while avoiding unnecessary restrictions on opportunities for the workforce as a whole. The race, sex, and national origin conscious provisions of the plan or program should be maintained only so long as is necessary to achieve these objectives.

(ii) Goals and timetables should be reasonably related to such considerations as the effects of past discrimination, the need for prompt elimination of adverse impact or disparate treatment, the availability of basically qualified or qualifiable applicants, and the number of employment opportunities expected to be available.

(d) *Written or unwritten plans or programs*—(1) *Written plans required for 713(b)(1) Protection.* The protection of section 713(b) of Title VII will be accorded by the Commission to a person subject to Title VII only if the self analysis and the affirmative action plan are dated and in writing, and the plan otherwise meets the requirements of Section 713(b)(1). The Commission will not require that there be any written statement concluding that a Title VII violation exists.

(2) *Reasonable cause determinations.* Where an affirmative action plan or program is alleged to violate Title VII, or is asserted as a defense to a charge of discrimination, the Commission will investigate the charge in accordance with its usual procedures and pursuant to the standards set forth in these Guidelines, whether or not the analysis and plan are in writing. However, the absence of a written self analysis and a written affirmative action plan or program may make it more difficult to provide credible evidence that the analysis was conducted, and that action was taken pursuant to a plan or program based on the analysis. Therefore, the Commission recommends that such analyses and plans be in writing.

§ 1608.5 Affirmative action compliance programs under Executive Order No. 11246, as amended.

Under Title VII, affirmative action compliance programs adopted pursuant to Executive Order No. 11246, as amended, and its implementing regulations, including 41 CFR Part 60-2 (Revised Order 4), will be considered by the Commission in light of the similar purposes of Title VII and the Executive Order, and the Commission's responsibility under Executive Order No. 12067 to avoid potential conflict among Federal equal employment opportunity programs. Accordingly, the Commission will process Title VII complaints involving such affirmative action compliance programs under this section.

(a) *Procedures for review of Affirmative Action Compliance Programs.* If adherence to an affirmative action compliance program adopted pursuant to Executive Order No. 11246, as amended, and its implementing regulations, is the basis of a complaint filed under Title VII, or is alleged to be the justification for an action which is challenged under Title VII, the Commission will investigate to determine:

(1) Whether the affirmative action compliance program was adopted by a person subject to the Order and pursuant to the Order, and (2) whether adherence to the program was the basis of the complaint or the justification.

(1) *Programs previously approved.* If the Commission makes the determination described in paragraph (a) of this section and also finds that the affirmative action program has been approved by an appropriate official of the Department of Labor or its authorized agencies, or is part of a conciliation or settlement agreement or an order of an administrative agency, whether entered by consent or after contested proceedings brought to enforce Executive Order No. 11246, as amended, the Commission will issue a determination of no reasonable cause.

(2) *Program not previously approved.* If the Commission makes the determination described in paragraph (a), of this section but the program has not been approved by an appropriate official of the Department of Labor or its authorized agencies, the Commission will: (i) Follow the procedure in § 1608.10(a) and review the program, or (ii) refer the plan to the Department of Labor for a determination of whether it is to be approved under Executive Order No. 11246, as amended, and its implementing regulations. If, the Commission finds that the program does conform to these Guidelines, or the Department of Labor approves the affirmative action compliance program, the Commission will issue a determination of no reasonable cause under § 1608.10(a).

(b) *Reliance on these guidelines.* In addition, if the affirmative action compliance program has been adopted in good faith reliance on these Guidelines, the provisions of section 713(b)(1) of Title VII and of § 1608.10(b), below, may be asserted by the contractor.

§ 1608.6 Affirmative action plans which are part of Commission conciliation or settlement agreements.

(a) *Procedures for review of plans.* If adherence to a conciliation or settlement agreement executed under Title VII and approved by a responsible official of the EEOC is the basis of a complaint filed under Title VII, or is alleged to be the justification for an action challenged under Title VII, the Commission will investigate to determine: (1) Whether the conciliation agreement or settlement agreement was approved by a responsible official of the EEOC, and (2)

whether adherence to the agreement was the basis for the complaint or justification. If the Commission so finds, it will make a determination of no reasonable cause under § 1608.10(a) and will advise the respondent of its right under section 713(b)(1) of Title VII to rely on the conciliation agreement.

(b) *Reliance on these guidelines.* In addition, if the affirmative action plan or program has been adopted in good faith reliance on these Guidelines, the provisions of section 713(b)(1) of Title VII and of § 1608.10(b), below, may be asserted by the respondent.

§ 1608.7 Affirmative action plans or programs under State or local law.

Affirmative action plans or programs executed by agreement with state or local government agencies, or by order of state or local government agencies, whether entered by consent or after contested proceedings, under statutes or ordinances described in Title VII, will be reviewed by the Commission in light of the similar purposes of Title VII and such statutes and ordinances. Accordingly, the Commission will process Title VII complaints involving such affirmative action plans or programs under this section.

(a) *Procedures for review of plans or programs.* If adherence to an affirmative action plan or program executed pursuant to a state statute or local ordinance described in Title VII is the basis of a complaint filed under Title VII or is alleged to be the justification for an action which is challenged under Title VII, the Commission will investigate to determine: (1) Whether the affirmative action plan or program was executed by an employer, labor organization, or person subject to the statute or ordinance, (2) whether the agreement was approved by an appropriate official of the state or local government, and (3) whether adherence to the plan or program was the basis of the complaint or justification.

(1) *Previously Approved Plans or Programs.* If the Commission finds the facts described in paragraph (a) of this section, the Commission will, in accordance with the "substantial weight" provisions of section 706 of the Act, find no reasonable cause where appropriate.

(2) *Plans or Programs not previously approved.* If the plan or program has not been approved by an appropriate official of the state or local government, the Commission will follow the procedure of § 1608.10 of these Guidelines. If the Commission finds that the plan or program does conform to these Guidelines, the Commission will make a determination of no reasonable cause as set forth in § 1608.10(a).

(b) *Reliance on these guidelines.* In addition, if the affirmative action plan or program has been adopted in good faith reliance on these Guidelines, the provisions of section 713(b)(1) and § 1608.10(b), below, may be asserted by the respondent.

§ 1608.8 Adherence to court order.

Parties are entitled to rely on orders of courts of competent jurisdiction. If adherence to an Order of a United States District Court or other court of competent jurisdiction, whether entered by consent or after contested litigation, in a case brought to enforce a Federal, state, or local equal employment opportunity law or regulation, is the basis of a complaint filed under Title VII or is alleged to be the justification for an action which is challenged under Title VII, the Commission will investigate to determine: (a) Whether such an Order exists and (b) whether adherence to the affirmative action plan which is part of the Order was the basis of the complaint or justification. If the Commission so finds, it will issue a determination of no reasonable cause. The Commission interprets Title VII to mean that actions taken pursuant to the direction of a Court Order cannot give rise to liability under Title VII.

§ 1608.9 Reliance on directions of other government agencies.

When a charge challenges an affirmative action plan or program, or when such a plan or program is raised as justification for an employment decision, and when the plan or program was developed pursuant to the requirements of a Federal or state law or regulation which in part seeks to ensure equal employment opportunity, the Commission will process the charge in accordance with § 1608.10(a). Other agencies with equal employment opportunity responsibilities may apply the principles of these Guidelines in the exercise of their authority.

§ 1608.10 Standard of review.

(a) *Affirmative action plans or programs not specifically relying on these guidelines.* If, during the investigation of a charge of discrimination filed with the Commission, a respondent asserts that the action complained of was taken pursuant to an in accordance with a plan or program of the type described in these Guidelines, the Commission will determine whether the assertion is true, and if so, whether such a plan or program conforms to the requirements of these guidelines. If the Commission so finds, it will issue a determination of no reasonable cause and, where appropriate, will state that the determination constitutes a written interpretation or opinion of the Commission under section 713(b)(1). This interpretation may be relied upon by the respondent and asserted as a defense in the event that new charges involving similar facts and circumstances are thereafter filed against the respondent, which are based on actions taken pursuant to the affirmative action plan or program. If the Commission does not so find, it will proceed with the investigation in the usual manner.

(b) *Reliance on these guidelines.* If a respondent asserts that the action taken was pursuant to and in accordance with a plan or program which was adopted or implemented in good faith, in conformity with, and in reliance upon these Guidelines, and the self analysis and plan are in writing, the Commission will determine whether such assertion is true. If the Commission so finds, it will so state in the determination of no reasonable cause and will advise the respondent that:

(1) The Commission has found that the respondent is entitled to the protection of section 713(b)(1) of Title VII; and

(2) That the determination is itself an additional written interpretation or opinion of the Commission pursuant to section 713(b)(1).

§ 1608.11 Limitations on the application of these guidelines.

(a) *No determination of adequacy of plan or program.* These Guidelines are applicable only with respect to the circumstances described in § 1608.1(d), above. They do not apply to, and the section 713(b)(1) defense is not available for the purpose of, determining the adequacy of an affirmative action plan or program to eliminate discrimination. Whether an employer who takes such affirmative action has done enough to remedy such discrimination will remain a question of fact in each case.

(b) *Guidelines inapplicable in absence of affirmative action.* Where an affirmative action plan or program does not exist, or where the plan or program is not the basis of the action complained of, these Guidelines are inapplicable.

(c) *Currency of plan or program.* Under section 713(b)(1), persons may rely on the plan or program only during the time when it is current. Currency is related to such factors as progress in correcting the conditions disclosed by the self analysis. The currency of the plan or program is a question of fact to be determined on a case by case basis. Programs developed under Executive Order No. 11246, as amended, will be deemed current in accordance with Department of Labor regulations at 41 CFR Chapter 60, or successor orders or regulations.

§ 1608.12 Equal employment opportunity plans adopted pursuant to section 717 of Title VII.

If adherence to an Equal Employment Opportunity Plan, adopted pursuant to Section 717 of Title VII, and approved by an appropriate official of the U.S. Civil Service Commission, is the basis of a complaint filed under Title VII, or is alleged to be the justification for an action under Title VII, these Guidelines will apply in a manner similar to that set forth in § 1608.5. The Commission will issue regulations setting forth the procedure for processing such complaints.

PART 1601—PROCEDURAL REGULATIONS

Issuance of Interpretation and Opinion

AGENCY: Equal Employment Opportunity Commission.

ACTION: Final rule.

SUMMARY: The Commission is today publishing in final form a set of Guidelines on Affirmative Action (44 FR 4422), to encourage voluntary action to eliminate employment discrimination. Section 1601.33 of the Commission's regulations is being amended to reflect a new method, contemplated by these Guidelines, by which the Commission may issue an "interpretation of opinion" of the Commission within the meaning of

Section 713 of Title VII of the Civil Rights Act of 1964, as amended.

EFFECTIVE DATE: February 20, 1979.

FOR FURTHER INFORMATION CONTACT: Peter C. Robertson, Director, Office of Policy Implementation, 2401 E Street, NW., Room 4002A, Washington, D.C. 20506 (202) 254-7639.

SUPPLEMENTARY INFORMATION: The Commission's new Guidelines on Affirmative Action contemplate that in instances where a charge of discrimination has been filed and the Commission finds that the treatment complained of occurred as a result of affirmative action procedures consistent with its Guidelines on Affirmative Action, the Commission will issue a determination of no reasonable cause. This determination may contain language stating that it is "a written interpretation or opinion of the Commission" within the meaning of Section 713(b)(1) of Title VII of the Civil Rights Act of 1964, as amended. The respondent in such a case may rely upon this determination as a defense to any subsequent complaints of discrimination which involve similar facts and circumstances, if the subsequent actions complained of were also taken by the respondent under its affirmative action procedures.

Such language will also appear in no-cause determinations whenever the Commission finds that the action complained of occurred pursuant to an affirmative action plan adopted in good faith compliance with, and reliance upon, the Commission's Guidelines on affirmative Action.

The Commission's procedural regulations are accordingly revised to include this specific type of no-cause finding as a type of "written interpretation or opinion of the Commission."

Signed at Washington, D.C. this 16th day of January 1979.

For the Commission.

Eleanor Holmes Norton,

Chair.

Therefore, 29 CFR 1601.33 is amended to read as follows:

§ 1601.33 Issuance of interpretation or opinion.

Only the following may be relied upon as a "written interpretation or opinion of the Commission" within the meaning of Section 713 of Title VII:

(a) A letter entitled "opinion letter" and signed by the General Counsel on behalf of the Commission, or

(b) Matter published and specifically designated as such in the Federal Register, including the Commission's Guidelines on Affirmative Action, or

(c) A Commission determination of no reasonable cause, issued under the circumstances described in § 1608.10 (a) or (b) of the Commission's Guidelines on Affirmative Action 29 CFR Part 1608, when such determination contains a statement that it is a "written interpretation or opinion of the Commission."

Subpart F—Fiscal Procedures and Auditing

§ 51.100 Definitions.

Unless the context requires otherwise, as used in this subpart, the term:

(a) "Compliance audit" means the review of the documentation concerning a recipient government's expenditure of entitlement funds to determine that those funds have been expended in compliance with the provisions of the Act and regulations.

(b) "Financial audit" means examination of the financial statements concerning all funds of a recipient government in accordance with generally accepted auditing standards.

(c) "Generally accepted auditing standards" means those auditing standards pronounced by the American Institute of Certified Public Accountants and incorporated in its *Statements on Auditing Standards,* or those in the financial and compliance element of the *Standards for Audit of Governmental Organizations, Programs, Activities & Functions,* issued in 1972 by the Comptroller General of the United States.

(d) "Independent audit" means an audit conducted by independent public accountants, or by independent qualified accountants or examiners from a State or local agency. An independent public accountant or independent qualified accountant or examiner is one who has no personal interest directly or indirectly in the financial affairs of the government being audited, or in the financial affairs of any of the officers of the government being audited.

(1) In those states in which an audit is required by State law to be made of the State government by a State office or official, such audit shall be considered to meet the requirements of an independent audit provided the principal officer of the State audit agency is not responsible for the maintenance of the accounting records being audited and does not report to the officer responsible for maintenance of such accounting records, and is:

(i) Elected by the citizens of the State;

(ii) Elected or appointed by and reports to the State legislature or a committee thereof; or

(iii) Appointed by the Governor and confirmed by and reports to the legislature or a committee thereof.

(2) In those States in which an audit is made of local governments (or certain categories of local government) by a State office or official, such audit shall be considered to meet the requirements of an independent audit.

(3) Audits of local recipient governments made by a permanent (internal) auditing office or officer employed on a full-time basis shall be considered to meet the requirements of an independent audit provided the principal officer of the audit agency is not responsible for the maintenance of the official accounting records being audited and does not report to the officer responsible for maintenance of official accounting records, and is:

(i) Elected by the citizens of the local recipient governments;

(ii) Reports to the governing body of the local recipient government or a committee thereof; or

(iii) Appointed by the chief executive officer of the local recipient government and reports to the governing body of the local recipient government or a committee thereof.

(4) Audits other than those specified in paragraphs (d)(1), (2) and (3) of this section shall not be considered to be independent audits.

(e) "Independent public accountant" means independent certified public accountants, and licensed public accountants licensed on or before December 31, 1970, certified or licensed by a regulatory authority of a State or other political subdivision of the United States.

§ 51.101 Procedures applicable to the use of funds.

A recipient government which receives entitlement funds under the Act shall: (a) Establish a trust fund and deposit all entitlement funds received and all interest earned thereon in that trust fund. The trust fund may be established on the books and records as a separate set of accounts, or a separate bank account may be established. If the trust fund is established as a separate set of accounts, the fund comprising these accounts shall be classified as a special revenue fund and accounted for accordingly.

(b) Use, obligate, or appropriate entitlement funds within 24 months from the end of the entitlement period to which the entitlement payment is applicable. The use, obligation or appropriation of entitlement funds shall be consistent with State or local law requiring a legislative enactment in ordinance or resolution form. Any interest earned on such funds while in the trust fund shall be used, obligated, or appropriated within 24 months from the end of the entitlement period during which the interest was received or credited. An extension of time in which to act on the funds, or interest accrued, shall be obtained by application to the Director. The application will set forth the facts and circumstances supporting the need for more time and the amount

of additional time requested. The Director may grant such extensions of time which appear necessary or appropriate.

(c) Provide for the expenditure of entitlement funds in accordance with the laws and procedures applicable to the expenditure of its own revenues so long as those laws and procedures do not conflict with Federal law.

(d) Maintain its fiscal accounts in a manner sufficient to: (1) Permit the reports required by the Director to be prepared, and

(2) Permit the tracing of entitlement funds to a level of expenditure adequate to establish that the funds have not been used in violation of the restrictions and prohibitions of this part. Tracing requires that vouchers in support of expenditures funded by the Act shall be identified. Identification can be made in any one of three ways as follows:

(i) Maintain a separate set of fund accounts;

(ii) Maintain a separate bank account; or

(iii) Keep a memorandum record of the voucher numbers and amounts for the expenditures funded by entitlements received under the Act.

The accounting for entitlement funds shall, at a minimum, employ the same fiscal accounting and internal audit procedures as are used with respect to the revenues derived from the recipient government's own sources.

(e) Provide to the Director and to the Comptroller General of the United States, on reasonable notice, access to and the right to examine such books, documents, papers or records as the Director may reasonably require for the purpose of reviewing compliance with the Act and the regulations of this part or, in the case of the Comptroller General, as the Comptroller General may reasonably require for the purpose of reviewing compliance and operations under the Act.

§ 51.102 Auditing and evaluation.

(a) *In general.* Each recipient government which expects to receive entitlement funds for entitlement periods beginning on or after January 1, 1977, shall have an independent audit of its financial statements conducted for the purpose of determining compliance with the provisions of the Act, in accordance with generally accepted auditing standards, not less often than once every three years. Such audit may be separately performed as a financial audit and a compliance audit.

(b) *Election by recipient government.* A recipient government may elect to have the requirements of paragraph (a) of this section not applicable to that government upon filing notice to the Director that the audits are conducted in compliance with State or local law and meet the following requirements:

(1) The financial statements of the recipient governments are audited by independent public accountants as defined in section 51.100(e) of this subpart, or by independent auditors as defined in paragraph (b) of this section; and

(2) The audits of the recipient government are conducted in accordance with generally accepted auditing standards;

(3) The audits of the recipient government will be conducted not less often than every three years; and

(4) A compliance audit, as well as a financial audit, is conducted.

(c) *Inapplicability of audit requirement.* The requirement of paragraph (a) of this section shall not apply where the recipient government's entitlement for any of its fiscal years is less than $25,000. State or local law which requires an audit of such government's financial statements must be complied with in accordance with § 51.101(c) of this subpart, and will constitute compliance with paragraph (a). Such an audit conducted under State or local law need not be submitted to the ORS, but shall be made available upon request by the Director.

(d) *Series of audits.* A series of independent audits may be used as an alternative to the provisions of paragraph (a) if they are conducted in accordance with generally accepted auditing standards, over a period not to exceed three fiscal years, and cover, in the aggregate, all of the accounts of a recipient government. When doing a series of audits a recipient government may perform the compliance audit for any one of the three fiscal years.

§ 51.103 Waiver of audit requirement where financial accounts are unauditable.

The Director may, upon written application of the chief executive officer of the recipient government, waive the provisions of § 51.102 of this subpart for any fiscal period, if in the course of determining compliance with § 51.102, the independent auditor renders an opinion that the financial accounts of such recipient government are not auditable, and the chief executive officer of such recipient government assures the Director that the accounts are not auditable and clearly set forth the arrangements which have been made or taken toward making such financial accounts auditable. The Director shall satisfy herself by investigation or inquiry that the recipient government is achieving substantial progress toward making its financial accounts auditable. A recipient government, which fails to apply to the Director for the waiver based upon the unauditability of its financial accounts shall not be entitled to use the waiver provisions of this section.

§ 51.104 Audits of secondary recipients.

A recipient government shall be responsible for an audit of the entitlement funds transferred to any secondary recipient, where the aggregate of the entitlement funds transferred to such secondary recipient during the fiscal year is $25,000 or more. Such audit shall be conducted pursuant to § 51.102 of this subpart and the *Audit Guide and Standards for Revenue Sharing Recipient* currently applicable published by the Office of Revenue Sharing and available to each recipient government.

§ 51.105 Reliance upon audits under other Federal laws.

The Director may rely upon audits of the financial statements of recipient governments conducted in accordance with other Federal laws, for any fiscal period, provided that such audits substantially satisfy the requirements for audits contained in § 51.102(a) of this part.

§ 51.106 Audit opinions.

(a) *In general.* Opinions made with respect to audits must be rendered as a part of the audit report and shall be in accordance with the opinion in general use for attesting to financial statements, as defined in paragraph 51.100(c). Examples of opinions are set out in the appendix of the *Audit Guide and Standards for Revenue Sharing Recipients* published by the Office of Revenue Sharing and available to each recipient government.

(b) *Nature of opinions.* Audit opinions may be unqualified, qualified, adverse, or a disclaimer of an opinion (provided the accounts are auditable). Audit opinions may be expressed on cash basis statements.

(c) *Expression of unqualified opinions.* The expression of an unqualified opinion shall include the statement that the financial statements are in accordance with generally accepted accounting principles. Generally accepted accounting principles are defined as those pronouncements of the National Committee on Governmental Accounting as set forth in its publication *Governmental Accounting, Auditing and Financial Reporting* published in 1968, or any subsequent revisions thereof.

§ 51.107 Scope of audits.

(a) *In general.* The scope of each audit required under § 51.102(a) of this part shall include all of the financial statements for each separate fund which is defined as a self-balancing group of accounts which the recipient government is required to maintain pursuant to State or local law (as determined by the State Attorney General or the legal counsel of a unit of local government). The audit shall be of the financial and compliance type described in *The Standards for Audit of Governmental Organization, Programs, Activities & Functions* as issued in 1972 by the Comptroller General of the United States, or the financial types prescribed by the American Institute of Certified Public Accountants and incorporated in its *Statements on Auditing Standards* and as described further in the *Audit Guide and Standards for Revenue Sharing Recipients,* currently applicable, and published by the Office of Revenue Sharing. The audit for compliance shall pertain only to entitlement funds of the recipient government received under the Act.

(b) *Verification of fiscal data reported to the Bureau of the Census.* The scope of the audit shall include also a verification of the recipient government's fiscal data as reported by it to the Bureau of the Census.

(c) *Financial statement.* For purposes of this subpart financial statements are those statements which:

(1) Reflect the financial transactions for all funds for a specific period of time, and

(2) Present the financial position as of the end of that fiscal period.

§ 51.108 Retention of audit workpapers.

Audit workpapers and related audit reports shall be retained for three years after the issuance of the audit report, and shall be available upon request to the Director and the Comptroller General or to their representatives.

§ 51.109 Requirement to submit audit reports.

The Director may require the chief executive officer of a recipient government to submit a copy of its audit reports at such times as she may request.

Subpart G—Proceedings for Reduction in Entitlement, Withholding, Suspension, or Repayment of Funds

§ 51.200 Scope of subpart.

The regulations of this subpart govern the procedure and practice requirements involving adjudications where the Act requires reasonable notice and opportunity for a hearing. The adjudications covered in this subpart include administrative hearings concerning violations of all provisions of this part and unless otherwise specified, the procedures described herein apply to all types of hearings.

§ 51.201 Liberal construction.

The regulations in this subpart shall be liberally construed to secure just, expeditious, and efficient determination of the issues presented. The Rules of Civil Procedure for the District Courts of the United States, where applicable, shall be a guide in any situation not provided for or controlled by this subpart, but shall be liberally construed or relaxed when necessary.

§ 51.202 Reasonable notice and opportunity for hearing.

Whenever the Director has reason to believe that a recipient government has failed to comply with any section of the Act or of the provisions of this part, and that repayment, withholding, or reduction in the amount of an entitlement of a recipient government is required for a violation of the provisions of subparts B, D and F, or suspension or termination of the entitlement payments for violations of subpart E, the Director shall give reasonable notice and opportunity of hearing to such government as required by the pertinent procedural provisions of subparts A, E or G prior to the invocation of any sanction under the Act.

§ 51.203 Opportunity for compliance.

(a) *In general.* Except in proceedings involving willfulness or those in which the public interest requires otherwise, an administrative hearing under this part will not be instituted until such facts or conduct which may warrant such action have been called to the attention of the chief executive officer of the recipient government in writing and he has been accorded an opportunity to demonstrate or achieve compliance with the requirements of the Act and the regulations of this part.

(b) *Opportunity for compliance, other than under subpart E.* The opportunity for compliance will be given in accordance with the procedural provisions of § 51.3 for violations of subparts B, D, and F. If the recipient government fails to meet the requirements of the Act and regulations within such reasonable time as specified by the Director in Subpart A, as administrative hearing may be initiated by the Director.

(c) *Opportunity for compliance under subpart E.* For violations of the provisions of subpart E, entitlement funds will be immediately suspended after notification of a determination of noncompliance pursuant to § 51.65, unless a recipient government specifically and timely requests an administrative hearing pursuant to § 51.65. If the recipient government is a unit of local government, a copy of the finding and determination letters shall be transmitted by the Director to the Governor of the State in which the unit of local government is located.

§ 51.204 Institution of administrative hearing.

(a) *Institution of an administrative hearing other than under subpart E.* An administrative hearing to require repayment of funds to the Director, or to withhold funds from subsequent entitlement payments, or to reduce the entitlement of a recipient government for violations of the provisions of subparts B, D, or F, shall be instituted by the Director by a complaint which names the recipient government as the respondent.

(b) *Institution of an administrative hearing under subpart E.* An administrative hearing under subpart E of this part shall be instituted at the request of the recipient government, pursuant to § 51.65 of subpart E within 30 days of receipt of that request by the Director. After the Director receives the request for a hearing she shall file a complaint which names the recipient government as the respondent.

51.205 Complaint for administrative hearing.

Administrative complaints shall include the following: (a) *Charges.* A complaint shall give a plain and concise description of the allegations which constitute the basis for the proceeding. A complaint shall be deemed sufficient if it fairly informs the respondent of the charges against it.

(b) *Demand for answer.* Notification shall be given in the complaint as to the place and time within the recipient government shall file its answer, which time shall be not less than 30 days from the date of service of the complaint. Where the hearing concerns provisions under subpart E the answer shall be required to be filed within 10 days of the date of service of the complaint. The complaint shall also contain notice that a decision by default will be rendered against the recipient government in the event it fails to file its answer as required.

§ 51.206 Service of complaint and other papers.

(a) *Service of complaint.* The complaint or a true copy thereof may be

served upon the recipient government by first-class mail or by certified mail, return receipt requested; or it may be served in any other manner which has been agreed to by the respondent. Where the service is by certified mail, the return Postal Service receipt duly signed on behalf of the respondent shall be proof of service. Where the hearing concerns the provisions of subpart E, the complaint shall be served upon the recipient government within seven days of receipt of the request for a hearing from the recipient government.

(b) *Service of papers other than complaint.* Any paper other than the complaint may be served upon a party or upon its attorney of record by first-class mail. Such mailing shall constitute complete service.

(c) *Filing of papers.* Whenever the filing of a paper is required or permitted in connection with an administrative hearing under this subpart, and the place of filing is not specified in this subpart or by rule or order of the administrative law judge, the paper shall be filed with the Director, Office of Revenue Sharing, Treasury Department, Washington, D.C. 20226. All papers shall be filed in duplicate.

(d) *Motions and requests.* Motions and requests may be filed with the designated administrative law judge, except that an application to extend the time for filing an answer shall be filed with the Director, Office of Revenue Sharing, pursuant to § 51.207(a).

§ 51.207 Answer; referral to administrative law judge.

(a) *Filing.* The recipient government's answer shall be filed in writing within the time specified in the complaint, unless on application the time is extended by the Director. The recipient government's answer shall be filed in duplicate with the Director, Office of Revenue Sharing.

(b) *Contents.* The answer shall contain a statement of facts which constitute the grounds of defense, and it shall specifically admit or deny each allegation set forth in the complaint, except that the recipient government shall not deny a material allegation in the complaint which it knows to be true, nor shall a recipient government state that it is without sufficient information to form a belief when in fact it possesses such information. The recipient government may also state affirmatively special matters of defense.

(c) *Failure to deny or answer allegation in the complaint.* Every allegation in the complaint which is not denied in the answer shall be deemed to be admitted and may be considered as proved, and no further evidence in respect of such allegation need be adduced at a hearing.

(d) *Failure to file answer.* Failure to file an answer within the time prescribed in the complaint, except as the time for answer is extended under paragraph (a) of this section, may constitute an admission of the allegations of the complaint and a waiver of hearing, and the administrative law judge may make his findings and decision by default without a hearing or further procedure.

(e) *Reply to answer.* No reply to the recipient government's answer shall be required, and new matter in the answer shall be deemed to be denied, but the Director may file a reply in her discretion and shall file one if the administrative law judge so requests.

(f) *Referral to administrative law judge.* Upon receipt of the answer by the Director, or upon filing a reply if one is deemed necessary, or upon failure of the recipient government to file an answer within the time prescribed in the complaint or as extended under paragraph (a) of this section, the complaint (and answer, if one is filed) shall be referred to the administrative law judge who shall then proceed to set a time and place for hearing and shall serve notice thereof upon the parties at least 15 days in advance of the hearing date.

§ 51.208 Proof; variance; amendment of pleadings.

In the case of a variance between the allegations in a pleading and the evidence adduced in support of the pleading, the administrative law judge may order or authorize amendment of the pleading to conform to the evidence; *provided that,* the party that would otherwise be prejudiced by the amendment is given reasonable opportunity to meet the allegation of the pleading as amended. The administrative law judge shall make findings on any issue presented by the pleadings as so amended.

§ 51.209 Representation.

A recipient government may appear in person through its chief executive officer or it may be represented by counsel or other duly authorized representative. The Director shall be represented by the General Counsel of the Treasury, or a person or persons designated by the General Counsel.

§ 51.210 Administrative law judge; powers.

(a) *Appointment.* An administrative law judge, appointed as provided by section 11 of the Administrative Procedure Act (5 U.S.C. 3105), shall conduct proceedings upon complaints filed under this subpart.

(b) *Powers of administrative law judge.* Among other powers provided by law, the administrative law judge shall have authority, in connection with any proceeding under this subpart, to do the following things:

(1) Administer oaths and affirmations;

(2) Make ruling upon motions and requests. Prior to the close of the hearing no appeal shall be made from any such ruling except, at the discretion of the administrative law judge, in extraordinary circumstances;

(3) Determine the time and place of hearing and regulate its course and conduct. In determining the place of hearing the administrative law judge may take into consideration the requests and convenience of the respondent or its counsel;

(4) Adopt rules of procedure and modify the same from time to time as occasion requires for the orderly disposition of proceedings;

(5) Rule upon offers of proof, receive relevant evidence, and examine witnesses;

(6) Take or authorize the taking of depositions;

(7) Receive and consider oral or written arguments on facts or law;

(8) Hold or provide for the holding of conferences for the settlement or simplification of the issues by consent of the parties;

(9) Perform the acts and take the measures necessary or appropriate to promote the efficient conduct of any proceeding; and

(10) Make initial findings and decision.

§ 51.211 Administrative hearings.

(a) *Administrative hearing for violations other than subpart E.* The administrative law judge shall preside at the hearing on a complaint. Testimony of witnesses shall be given under oath or affirmation. the hearing shall be stenographically recorded and transcribed. Hearings will be conducted pursuant to section 7 of the Administrative Procedure Act (5 U.S.C. 556).

(b) *Administrative hearing under subpart E.* A hearing requested by a recipient government under subpart E pursuant to section 51.65 shall commence 30 days after receipt of such request by the Director and shall be before an administrative law judge. Testimony shall be given under oath or affirmation and shall consist of two proceedings as follows:

(1) The first proceeding shall be in the nature of a summary hearing conducted in accordance with the provisions of this

subpart, similar to a judicial hearing on a preliminary injunction. All parties shall have an opportunity to present their respective positions. The administrative law judge shall issue a preliminary finding as to whether the recipient government is likely to prevail, which finding shall be based upon the record developed through this proceeding, and shall be issued within 30 days after commencement of the summary hearing.

(2) The second proceeding, if necessary, shall be a full hearing on the merits conducted in accordance with the provisions of this subpart and shall result in the initial decision of the administrative law judge. The initial decision of the administrative law judge shall be based upon the complete record of all the evidence developed throughout the hearing.

(c) *Failure to appear.* If a recipient government fails to appear at a hearing, after due notice thereof has been served upon it or upon its counsel of record, it shall be deemed to have waived the right to a hearing and the administrative law judge may make her findings and decision against the respondent by default.

(d) *Waiver of hearing.* A recipient government may waive the hearing by informing the adminstrative law judge, in writing, on or before the date set for hearing, that it desires to waive a hearing. In such event the administrative law judge may make her findings and decision based upon the pleadings before her, together with such documentary evidence properly submitted. The decision shall plainly show that the respondent waived hearing.

§ 51.212 Stipulations.

The administrative law judge shall, prior to or at the beginning of a hearing, require the parties to arrive at such stipulations as will eliminate the necessity of taking evidence with respect to allegations of facts concerning which there is no substantial dispute. The administrative law judge shall take similar action, where it appears appropriate, throughout the hearing and shall call and conduct any conferences which she deems advisable with a view to the simplification, clarification, and disposition of any of the issues involved.

§ 51.213 Evidence.

(a) *In general.* Any evidence which would be admissible under the rules of evidence governing proceedings in matters not involving trial by jury in the Courts of the United States, shall be admissible and controlling as far as possible; *provided that* the administrative law judge may relax such rules in any hearing when in her judgment such relaxation would not impair the rights of either party and would more speedily conclude the hearing, or would better serve the ends of justice. Evidence which is irrelevant, immaterial or unduly repetitious shall be excluded by the administrative law judge.

(b) *Depositions.* The deposition of any witness may be taken pursuant to § 51.214 and the deposition may be admitted.

(c) *Proof of documents.* Official documents, records, and papers of a respondent shall be admissible as evidence without the production of the original, provided that such documents, records and papers are evidenced as the original by a copy attested or identified by the chief executive officer of the respondent or the custodian of the document, and contain the seal of the respondent.

(d) *Exhibits.* If any document, record, paper, or other tangible or material thing is introduced in evidence as an exhibit, the administrative law judge may authorize the withdrawal of the exhibit subject to any conditions he deems proper. An original document, paper or record need not be introduced, and a copy duly certified (pursuant to paragraph (c) of this section) shall be deemed sufficient.

(e) *Objections.* Objections to evidence shall be in short form, stating the grounds of objection relied upon, and the record shall not include argument thereon, except as permitted by the administrative law judge. Rulings on such objections shall be a part of the record. No exception to the ruling is necessary to preserve the right of either party to the proceeding.

§ 51.214 Depositions.

(a) *In general.* Depositions for use at a hearing may, with the written approval of the administrative law judge, be taken by either the Director or the respondent or their duly authorized representatives. Depositions may be taken upon oral or written interrogatories, upon not less than 15 days written notice to the other party, before any officer duly authorized to administer an oath for general purposes, except in proceedings under subpart E in which case depositions may be taken upon not less than 10 days written notice. Such written notice shall state the names of the witnesses and the time and place where the depositions are to be taken. The requirement of written notice may be waived by the parties in writing, or may be modified by the administrative law judge. Depositions may be taken from the persons and at times and places mutually agreed to by the parties.

(b) *Written interrogatories.* When a deposition is taken upon written interrogatories, any cross-examination shall be upon written interrogatories. Copies of such written interrogatories shall be served upon the other party with the notice, and copies of any written cross-interrogatories shall be mailed by first class mail or delivered to the opposing party at least 7 calendar days before the date on which such interrogatories or cross interrogatories are scheduled to be answered, unless the parties mutually agree or the administrative law judge rules otherwise. A party upon whose behalf a deposition is taken must file it with the administrative law judge and serve one copy upon the opposing party. Expenses in the reporting of depositions shall be borne by the party at whose request the deposition is taken.

§ 51.215 Stenographic record; oath of reporter; transcript.

(a) *In general.* A stenographic record shall be made of the testimony and proceedings, including stipulations and admissions of fact in all proceedings. A transcript of the proceedings and evidence at a hearing shall be made in all cases.

(b) *Oath of reporter.* The reporter making the stenographic record shall subscribe an oath before the administrative law judge, to be filed in the record of the case, that she will truly and correctly report the oral testimony and proceedings at such hearing and accurately transcribe the same to the best of her ability.

(c) *Transcript.* In cases where the hearing is stenographically reported by a Government contract reporter copies of the transcript may be obtained from the reporter at rates not to exceed the maximum rates fixed by contract between the Government and the reporter. Where the hearing is stenographically reported by a regular employee of the Department of the Treasury, a copy thereof will be supplied to the respondent or its counsel at actual cost of duplication. Copies of exhibits introduced at the hearing or at the taking of deposition will be supplied to the parties upon the payment of a reasonable fee (31 U.S.C. 483(a)).

§ 51.216 Proposed findings and conclusions.

Except in cases where a recipient government has failed to answer the complaint, has failed to appear at the hearing, or has waived the hearing, the

administrative law judge shall, prior to making her preliminary finding under § 51.217 for hearings under subpart E, or her initial decision, give the parties a reasonable opportunity to submit proposed findings and conclusions and any supporting reasons.

§ 51.217 Preliminary finding (for hearings under subpart E).

(a) *Suspension of funding or termination of payment by administrative law judge.* (1) Within 30 days after the commencement of a summary hearing under § 51.211(b)(1) the administrative law judge conducting the hearing shall, on the record of evidence then before her, issue a preliminary finding as to whether the recipient government has failed to comply with the provisions of this part. If the preliminary finding of the administrative law judge is to the effect that the recipient government is not likely to prevail on the issues to which the hearing pertained, the Director shall immediately suspend the further payment of entitlement funds to the recipient government.

(2) Such suspension shall remain in effect until a compliance agreement is entered into by the recipient government and the Director. A preliminary finding by the administrative law judge is not appealable by the recipient government. After the completion of the full hearing on the merits the administrative law judge will make findings and a decision based upon the complete record of the evidence. If the administrative law judge issues a decision that the recipient government has failed to comply with the provisions of this part then the recipient government must enter into a compliance agreement with the Director before the 31st day after the decision. If no compliance agreement is entered into, the Director shall, upon the initial decision and order of the administrative law judge, indefinitely suspend the payment of entitlement funds to the recipient government, continue the suspension invoked under paragraph (a)(1) of this section, or terminate the payment of entitlement funds if ordered to terminate by the administrative law judge.

(b) *Resumption of funding; finding of compliance by administrative law judge.* A determination by the administrative law judge that the recipient government has complied with the provisions of this part, will terminate a suspension of entitlement funds invoked by the Director pursuant to paragraph (a) of this section. In such case the Director shall, as promptly as feasible, pay over to the recipient government all entitlement funds the payment of which were temporarily suspended.

§ 51.218 Initial decision of the administrative law judge.

(a) *In general.* As soon as practicable after the conclusion of a full hearing on the merits under § 51.211(b)(2) and the receipt of any proposed findings and conclusions timely submitted by the parties, but in no event later than 30 days after the conclusion of the hearing, the administrative law judge shall, in accordance with 5 U.S.C. section 557, make his initial decision in the case. The initial decision shall include a statement of the findings of fact and the conclusions reached upon all the material issues of fact, law or discretion presented on the record, as well as the reasons or basis for them. The decision shall not however order any particular remedy for the noncompliance but shall only state whether the recipient government has failed to comply with the provisions of the statute. The nature of the remedy shall be within the discretion of the Director, based upon the findings of fact and conclusions of law of the administrative law judge. The initial decision shall further provide for one of the following orders:

(1) With respect to proceedings under subpart E, that the payment of all future entitlement funds to the recipient government shall be suspended, terminated, or resumed, including all payments previously suspended;

(2) With respect to proceedings other than under subpart E—

(A) That the respondent pay over to the Director an amount equal to the amount of entitlement funds determined to be expended in violation of the Act and the provision of this part;

(B) That the Director withhold from subsequent entitlement payments to the respondent an amount equal to the amount of entitlement funds determined to be expended in violation of the Act and the provisions of this part;

(C) That the entitlement of a recipient government be reduced and the amount of such reduction to be withheld from subsequent entitlement payments.

(3) That the proceedings be dismissed.

(b) *Order of suspension of funding.* An order of suspension of entitlement funds means that such funds will not be paid to the recipient government but will continue to accumulate in the State and Local Government Fiscal Assistance Trust Fund until such time as compliance is achieved by the recipient government.

(c) *Order of termination of funding.* An order to terminate the payment of entitlement funds means that the funds will be returned to the general fund of the Treasury and will not thereafter be available for entitlement payments unless the decision resulting in the termination of funding is reversed by an appellate tribunal.

§ 51.219 Certification and transmittal of record and decision.

After reaching his initial decision, the administrative law judge shall certify the complete record before him and shall immediately forward the certified record, together with a certified copy of his initial decision, to the Director. The administrative law judge shall serve also a copy of the initial decision by certified mail to the chief executive officer of the recipient government or to its attorney of record.

§ 51.220 What constitutes the record.

The transcript of testimony, pleadings and exhibits, all papers and requests filed in the proceeding, together with all findings, decisions and orders, shall constitute the exclusive record in the matter.

§ 51.221 Procedure on review of decision of administrative law judge.

(a) *Appeal to the Secretary.* (1) *By the recipient government.* In all proceedings, within 30 days from the date of the initial decision and order of the administrative law judge, the recipient government may appeal to the Secretary and file its exceptions to the initial decision and reasons for the exceptions. The recipient government shall transmit a copy of its appeal and reasons therefor to the Director of the Office of Revenue Sharing, who may, within 30 days from receipt of the recipient government's appeal, file a reply brief in opposition to the appeal. A copy of the reply brief, if one is filed, shall be tramsmitted to the recipient government or its counsel of record. Upon the filing of an appeal and a reply brief, if any, the Secretary shall make the final agency decision on the record of the administrative law jude.

(2) *By the Director of the Office of Revenue Sharing.* In all proceedings, the Director may, on her own motion, within 45 days after the initial decision, serve on the recipient government by certified mail a notice that the decision will be appealed to the Secretary. Within 30 days from such notice, the Director or her counsel will file with the Secretary her exceptions to the initial decision and her supporting reasons therefor. A copy of the exceptions shall be transmitted to the recipient government or its counsel of record, who, within 30 days after receipt thereof, may file a reply brief thereto with the Secretary and submit a copy to the Director of the Office of Revenue Sharing or her counsel. Upon

the filing of a reply brief, if any, the Secretary will make the final agency decision on the record of the administrative law judge.

(b) *Review by Secretary.* In all proceedings in the absence of appeal by either party, the Secretary may at her own discretion review the initial decision of the administrative law judge. Within 45 days of the initial decision, the Secretary shall serve on the recipient government by certified mail, a notice that she will review the decision. As part of the review the Secretary may request briefs from each party within 30 days of the date of such notice. Upon filing of the briefs the Secretary shall make the final agency decision on the record of the administrative law judge.

(c) *Decision of the Secretary.* On appeal or review of the initial decision of the administrative law judge, the Secretary shall make the final agency decision after review of the record or such portions thereof as may be cited by the parties to permit limiting of the issues. The Secretary may affirm, modify, or revoke the findings and initial decision of the administrative law judge. A copy of the Secretary's decision shall be transmitted immediately to the chief executive officer of the recipient government or its counsel of record.

§ 51.222 Effect of absence of appeal or review of initial decision of administrative law judge.

In the absence of either exceptions by the recipient government or a notice of appeal by the Director or review by the Secretary (where appropriate) within the time periods set forth in paragraphs (a), (b) or (c) of § 51.221, the initial decision of the administrative law judge shall become the final decision of the department.

§ 51.223 Effect of order of repayment, withholding of funds or suspension of funds.

(a) *Order of repayment.* For violations of provisions other than subpart E, if the final order of the administrative law judge or the Secretary against the recipient government is for repayment of funds to the United States pursuant to the Director shall give the recipient government 60 days within which to take corrective action. If the recipient fails to take corrective action within 60 days from receipt of such notice, the amount as determined by the order shall be repaid upon request of the Director. To the exten that the recipient government fails to repay, the Director shall withhold from subsequent entitlement payments to the recipient government an amount equal to the amount not repaid.

(b) *Order of withholding.* For violations of provisions other than subpart E, if the final order of the administrative law judge or the Secretary against the recipient government is for the withholding of future entitlement payments, the amounts as ordered shall be withheld by the Director after notice of the chief executive officer of the recipient government. The notice shall state that if the recipient government fails to take corrective action within 60 days after receipt of the notice, further entitlement payments will be withheld until the Director is satisfied that appropriate corrective action has been taken and there is full compliance with the Act and regulations of this part. In every case in which the recipient government is a unit of local government, a copy of the final order and notice shall be submitted to the Governor of the State in which the recipient government is located.

(c) *Order of suspension.* For violations of the provisions of subpart E, if the final order against the recipient government is for suspension of entitlement funds, (or continued suspension of funds suspended after a preliminary finding of the administrative law judge) the entitlement payment to the recipient government shall be suspended by the Director until the recipient government enters into a compliance agreement which satisfies the Director that appropriate corrective action has been taken and there is full compliance with the provisions of subpart E.

(d) *Order of termination.* For violations of the provisions of subpart E, if the order of the administrative law judge against the recipient government is for termination of entitlement funds, the entitlement payment to the recipient government shall be terminated by the Director. The recipient government may resume participation in the program in the future if it enters into a compliance agreement which satisfies the Director that appropriate corrective action has been taken and there is full compliance with the provisions of subpart E. Entitlement funds terminated shall be returned to the general fund of the Department and will not be available to the recipient government unless the order of termination is reversed by an appellate tribunal.

§ 51.224 Publicity of proceedings.

(a) *In general.* A proceeding conducted under this subpart shall be open to the public and to elements of the news media provided that, in the judgment of the administrative law judge, the presence of the media does not detract from the decorum and dignity of the proceeding.

(b) *Availability of record.* The record established in any proceeding conducted under this subpart shall be made available to inspection by the public as provided for in accordance with regulations of the Department of the Treasury pursuant to 31 CFR Part 1.

(c) *Decisions of the administrative law judge.* The statement of findings and the initial decision of the administrative law judge in any proceedings, whether or not on appeal or review, shall be indexed and maintained by the Director and made available for inspection by the public at the public documents room of the Department. If practicable, the statement of findings and the decisions of the administrative law judge shall be published periodically by the Department and offered for sale through the Superintendent of Documents.

§ 51.225 Judicial review.

(a) *In gereral.* Actions taken as a result of administrative hearings pursuant to this subpart shall be subject to judicial review pursuant to section 143 of Subtitle C of the Act.

(b) *Appeal by the respondent.* A respondent may appeal the initial decision of the administrative law judge which has become final, or a final order of the Secretary pursuant to §§ 51.221(c) or 51.222, to the U.S. Court of Appeals, as provided by law.

(c) *Cross-appeal by the Director.* In the event a recipient government appeals, the Director may cross-appeal any issues decided adversely to the ORS by the administrative law judge. Issues decided adversely to the ORS by the Secretary may not be appealed.

(d) *The record.* The Secretary, upon prior notification of the filing of the petition for review, shall have prepared in triplicate, a complete transcript of the record of the proceeding, and shall certify to the correctness of the record. The original record shall then be filed with the Court of Appeals which has jurisdiction.

[FR Doc. 79-39011 Filed 12-28-79; 8:45 am]
BILLING CODE 4810-28-M

federal register

Monday
December 31, 1979

Part IV

Department of the Interior

Office of Surface Mining Reclamation and Enforcement

Interim and Permanent Regulatory Program

DEPARTMENT OF THE INTERIOR

Office of Surface Mining Reclamation and Enforcement

30 CFR Parts 701, 741, 761 and 769

Surface Coal Mining and Reclamation Operations Permanent Regulatory Program

AGENCY: Office of Surface Mining Reclamation and Enforcement (OSM), U.S. Department of the Interior, Washington, D.C. 20240.

ACTION: Final rule.

SUMMARY: This notice amends 30 CFR 701.11 and 741.11 by postponing the effective date for operator compliance with the permanent program on Federal lands until the date of approval of a State program or implementation of a Federal program for a State, and amends 30 CFR 701.1(b)(3) and Parts 761 and 769 to preserve the current applicability of those regulations on Federal lands.

EFFECTIVE DATE: January 30, 1980.

FOR FURTHER INFORMATION CONTACT: Carl C. Close, Assistant Director, State and Federal Programs, Office of Surface Mining, U.S. Department of the Interior, Washington, D.C. 20240, (202) 343-4225.

SUPPLEMENTARY INFORMATION: A proposal to postpone the effective date for operator compliance with the permanent regulatory program on Federal lands was initiated by a petition from the State of Montana (subsequently joined by five additional western States) alleging that the requirements of 30 CFR 741.11(a) conflicted with Section 523(c) of the Surface Mining Control and Reclamation Act of 1977. Based on their argument, the petitioners recommended that the effective date for operator compliance with permanent Federal lands performance standards be extended for all operations in States with approved modified cooperative agreements pursuant to Section 523(c) of the Surface Mining Control and Reclamation Act of 1977 (SMCRA) until after State program approval or implementation of a Federal program for a State (44 FR 56272).

In response to the petitioners, OSM published a notice on September 28, 1979, (44 FR 56272-56275) proposing to amend the schedule for operator compliance with the permanent program until approval of a State program or implementation of a Federal program for a State. In contrast to the Montana petition, however, the new schedule proposed by OSM would have applied in all States and only to existing surface coal mining operations on Federal lands. Plans for new mines or major extensions of existing mines on Federal lands would still have had to comply with the March 13, 1979, regulations.

On October 11, 1979, the Department published a notice (44 FR 58873) which temporarily suspended, pending decision and publication of a final rule, the requirement that existing surface coal mining and reclamation operations on Federal lands comply with the permanent performance standards of Subchapter K on and after October 12, 1979.

Comments received from the western States and the coal industry indicated opposition to the September 28 revised rule and strong support for the Montana petition language. Several environmental groups, on the other hand, supported the proposed revision, if clarified in some particulars, while others opposed any change whatsoever. After evaluating the comments received and considering the issues raised, the Secretary has decided to adopt revised language which would postpone operator compliance with the permanent program on Federal lands for all operations in all States until approval of a State program or implementation of a Federal program for a State. An analysis and discussion of the major issues and concerns raised by the commenters follows.

Several comments from State and industry representatives expressed the belief that the proposed amendment was inconsistent with section 523(c) of the Act, which provides that "States with cooperative agreements existing on the date of enactment of this Act, may elect to continue regulation on Federal lands within the State, prior to approval by the Secretary of their State program, or imposition of a Federal program, provided that such existing cooperative agreement is modified to fully comply with the initial regulatory procedures set forth in section 502 of this Act." They felt it preempted the existing modified State/Federal cooperative agreements by requiring the administration and enforcement of two separate standards for mining operations within a State.

Commenters asserted that the basic purpose of the cooperative agreement is to prevent duality of administration and enforcement of mining and reclamation requirements by providing for State regulation of surface coal mining and reclamation operations on Federal lands within a State. They asserted OSM's proposed amendment violated this fundamental purpose by requiring one set of standards for new mining operations and major extensions and a second set of standards for existing mines. These commenters felt imposing two sets of standards would not permit a smooth transition from the interim program to the permanent regulatory program; it would likely create complex and confusing on-the-ground administrative problems for both the operator and for the regulatory authorities. This dual regulatory scheme, contend several commenters, would be inconsistent with the language of section 523(a) that States have an opportunity to develop State programs, the requirements of which must be reflected in the Federal lands program. Such opportunity, asserted the commenters, is important if local diversity in terrain, climate, biologic, chemical, and other physical conditions is to be considered fully in adopting a regulatory program.

One commenter felt OSM's argument that the revised rule would provide evenhanded treatment for operators of existing mines and a single timetable was not supported by facts or common sense. If these arguments are to be valid, asserted the commenter, all mines—not just existing ones—would follow the same schedule.

Suggesting that OSM had gone further than authorized by section 523, one commenter asserted that the Act expressly forbids the Secretary from delegating his authority on Federal lands, except under the narrow provisions of a cooperative agreement. Further, the Federal lands program may have more stringent requirements than those required by a State (section 523 (a) and (b)). Thus, contended the commenter, the Act makes no provision for the de facto deferral of the permanent program for existing mines proposed by OSM in the revised rule, that of prolonging less stringent requirements of the initial program in order to achieve "evenhanded" treatment. (The Secretary reasoned in the Preamble to the proposed rules, 44 FR 56273, that the proposal would provide for evenhanded treatment for operators of existing mines.) The commenter based his argument on Senate Report No. 95-128, 95th Congress, 1st session p. 95 (1977) which states that:

> While the Secretary could, for example, impose more stringent reclamation requirements on Federal lands than were required on non-Federal lands in the State, he could not permit less stringent requirements.

Also, pointed out this commenter, the Senate Report indicates that the Federal lands program would apply even if a State did not have a State program.

> The Federal Lands Program . . . must, at a minimum, incorporate all of the Act's requirements and where the Federal lands are in a State with an approved State

program, the requirements imposed by the States.

S. Rep. No. 95-128, 95th Cong., 1st Session p. 95 (1977)

The commenter asserted that both the Senate and House versions of the Act included a period of time when the Federal lands program would be covered by the Federal program (sic) but not by an approved State program, which nullifies the Secretary's rationale that Congress anticipated the States would have an opportunity to have a program approved.

Continuing this reasoning, the commenter noted that sections 511(a)(2) and 511(a)(3) of the Act prohibit approval of permit revisions unless the regulatory authority makes a positive finding that the revised reclamation plan meets the requirements of the Act and the State or Federal program. An extension to the area covered by the permit, except in incidental boundary revisions, must be made by application for another permit. Thus, asserts the commenter, OSM does not have the discretion to distinguish between "major" and "minor" extensions in requiring an applicant to seek a new permit when the plan is revised. Further, asserts the commenter, the application to be approved must comply with the Federal lands program if no State program is in effect.

In conclusion, the commenter indicated that nothing suggests that the Federal lands program must await State program approval. Rather, the Federal lands program would be amended to incorporate any special provisions of the approved State program. Thus, according to the commenter, no legal basis exists for the petitioners' argument that Congress intended States to have an opportunity to develop and have approved State programs prior to implementation of a permanent Federal lands program.

Another commenter indicated that, if adopted, the proposed revision should apply only in States where surface mining operations on Federal lands are being regulated by a State regulatory authority under a modified cooperative agreement approved pursuant to section 523(c) of the Act. The commenter asserted that the amendment should only apply to those States that have in good faith complied with the Act as evidenced by approval of a modified cooperative agreement. The commenter further contended that in States without cooperative agreements no legal mechanisms will be available to protect the land, air, and water quality on Federal lands.

Many comments on the proposed rule concerned the use of terms and phrases, such as "major or minor extension," "approvable," "not approvable," "sufficiently close to decision," "approved mining plans," and "existing mine plans." The comments were that without clarification, definition or deletion these undefined and non-specific terms and phrases will cause considerable confusion and conflict between the operators and the regulatory authority.

Several comments were received relative to the potential for increased adverse impact to the environment. One commenter indicated that restricting the permanent Federal lands programs to new mines and major additions would result in considerable environmental harm because the commenter felt that interim regulations contain less protective measures than the permanent program.

Other commenters alleged that the proposed rule, if adopted, might increase environmental harm, because the permanent Federal lands program for new and expanded mines would not contain requirements that reflect local variations on areas subject to mining activity; i.e., regulations developed under the State window concept would not be considered in evaluating mine plans relative to local conditions, thus subjecting these areas to possible greater environmental degradation.

As indicated by one commenter, many of the Federal lands in the East involve National Forest lands underlain by private coal. Citing several examples, the commenter pointed out that there is, apparently, considerable confusion concerning the jurisdictional responsibility and authority for the administration and regulation of mining operations on these lands. This confusion, asserts the commenter, should be resolved through clarifying language in the Preamble to the final rule.

Finally, several commenters supported the proposed amendment, but did not believe it should result in postponing the designation program, including the petition process to designate or terminate designations of Federal lands unsuitable for all or certain types of surface coal mining operations.

The divergent comments received on the proposed rulemaking confirm the ambiguous nature of the language in section 523 of the Act. The ambiguity arises in paragraphs (a) and (c) of the section and concerns the timing and scope of the Federal lands program. This section's language raise questions as to whether initial and permanent Federal lands programs are authorized, analogous to the non-Federal lands statutory scheme, and the relationship between the Federal lands program and cooperative agreements with States authorizing joint State-Federal regulation of surface mining operations on Federal lands.

Because of the section's ambiguous language, the Secretary explains his interpretation of the section here, hoping that the explanation will aid those who commented and other interested members of the public to understand the basis for the regulations promulgated in this notice.

Section 523 begins by stating that "the Secretary shall promulgate and implement a Federal lands program" within one year of enactment of the Act. The Act, however, provides only limited guidance concerning the composition of a "Federal lands program." That term is defined in section 701(5). The definition, however, merely refers back to section 523 defining the term to mean a program established by the Secretary pursuant to that section.

Some guidance is found in section 523(a). The Federal lands program is required to be one which (1) at a minimum, incorporates all of the requirements of the Act, (2) takes into consideration the diverse physical, climatological, and other unique characteristics of the Federal lands and (3) includes, at a minimum, the requirements of an approved State program, where Federal lands in a State with an approved State program are involved.

In attempting to structure a rational Federal lands program these factors need to be applied in the context of other pertinent, general, guiding principles found elsewhere in the Act. For example, States are acknowledged as the leading sources of knowledge on how diversity in terrain, climate, biologic, chemical, and other physical conditions in areas subject to mining operations should be reflected in regulations for surface coal mining operations. Sections 101(f) and 201(c)(g). Surface mining and reclamation standards among the coal producing States are to be reasonably uniform so that competition in interstate commerce among sellers of coal produced in different States will not be used to undermine the ability of the several States to improve and maintain adequate standards. Section 101(g). Cooperation between the States and the Secretary is necessary to prevent or mitigate adverse environmental effects of surface coal mining operations. Sections 101(k), 102(g), 201(c)(9).

In light of these several factors and guiding principles, the Secretary has used his broad legislative delegation of rulemaking authority, section 201(c)(2), to carry out the purposes of the Act to promulgate and implement a rational Federal lands program. This program reflects a reasonable reconciliation of the ambiguous statutory provisions and careful consideration of the administrative problems associated with regulation of surface coal mining operations that occur on Federal lands in many States and on Federal and private lands within a given State.

The Federal lands program must incorporate all the requirements of the Act. Section 523. The Secretary interprets this to mean that operators must comply initially with the set of performance standards specified in section 502(c), analogous to the situation for operators on non-Federal lands. Congress intended a phased implementation of performance standards with the most important being applied first. S. Rep. No. 95–128, 95th Cong., 1st Sess. 70 (1977). "This appears to the committee to be a practical mechanism for assuring compliance without raising the possibility of unwarranted hardship on the operator." *Id.* The Secretary has not found, nor did commenters cite any legislative history to the contrary suggesting that the unwarranted hardship Congress wanted to avoid imposing on operators on private lands, they, nevertheless, wanted to impose on operators on Federal lands.

Language in Section 523(c) gives support to the Secretary's interpretation of Section 523(a) that an initial Federal lands program is justified by the congressional mandate to include in the Federal lands program all the requirements of the Act. Congress required that existing cooperative agreements be modified to comply fully with the *initial regulatory procedures* set forth in section 502 of the Act if a State wished to continue its regulatory role on Federal lands under cooperative agreements which predated the Act. Congress did not require the existing cooperative agreements to be modified to comply with the permanent program.

The rationale for this is clear: to require the cooperative agreements to comply with the permanent program would have required such compliance in advance of the schedule for States to implement the permanent program under State programs incorporating laws and regulations corresponding to the permanent statutory requirements under SMCRA. Sections 503 and 504. But to read the requirement to modify cooperative agreements to comply with the initial program as suggesting that States with existing cooperative agreements, and operators who were fortunate to be operating on Federal lands within such States, were to be given a special variance from an otherwise clear requirement to regulate Federal lands under the permanent program is unwarranted. The Statute establishes no such clear requirement to regulate Federal lands under a permanent program in advance of State or Federal program implementation. As has been shown, the Secretary has reasonably interpreted Section 523(a) to authorize an initial program to be followed by a permanent program. Where a statute authorizes explicit variances. Section 515 (c) and (e), implied variances are not likely to be construed. *TVA* v. *Hill,* 437 U.S. 153 (1978).

The Secretary implemented the initial Federal lands program on August 22, 1978, when he promulgated amendments to 30 CFR Part 211 to incorporate the initial Federal lands program (43 FR 37181). When he did this, he satisfied his statutory obligation to promulgate and implement a Federal lands program within one year of the Act's enactment. Section 523(a). The Federal lands program was implemented on a phased schedule one year and 25 days following the August 3, 1977, enactment of SMCRA.

Although the initial phase of the Federal lands program had begun, its permanent phase had yet to be promulgated. On March 13, 1979, the Secretary promulgated the permanent phase, 30 CFR Chapter VII, Subchapter D, 44 FR 15332–15341. It reflected his then current interpretation of his authority and responsibility under Section 523. *See,* Preamble to Subchapter D, 44 FR 14972–14989 (March 13, 1979).

As explained in the preamble to the proposed rulemaking to amend 30 CFR 701.11 and 741.11, the Secretary's interpretation was questioned by Montana in the form of a petition to amend 30 CFR 741.11 (44 FR 56272, September 28, 1979).

The Secretary has reconsidered his interpretation of his responsibility and authority under Section 523 in the light of the rationale presented in that petition and comments received on the proposed amendments. The basis for his interpretation of Section 523 as reflected in the amendments to 30 CFR 701.11 and 741.11 adopted in this notice, is as follows: Nothing in Section 523 explicitly dictates when the second phase of the Federal lands program is to be implemented. (As has been explained, the one year requirement for implementation of the Federal lands program was satisfied when the program was implemented on a phased-in schedule, on August 22, 1978.) However, the provision that the Federal lands program incorporate all the requirements of the Act suggests with good reason that the permanent phase should coincide with permanent program implementation in the States. The schedule for this is dictated by Sections 503 and 504.

The Federal lands program is to reflect the diverse physical, climatological, and other unique characteristics of the Federal lands. Section 523(a). As explained above, Congress felt the States to be best qualified to judge how such characteristics should be reflected in the regulatory scheme. The States will make these judgements for non-Federal lands in their State program applications through the so-called "State window" mechanism in 30 CFR 731.13, through the use of various other provisions in the regulations, or by imposing more stringent standards than those chosen by the Secretary. As these local characteristics are unlikely to disappear abruptly at the boundary lines between Federal and non-Federal land within a State, the Secretary believes waiting for State judgment on these conditions before applying the permanent Federal lands program will benefit the regulated industry and regulatory authorities by eliminating the administrative and planning problems associated with another stage of regulation amendments applicable to operations on Federal lands.

In addition to this deference to State judgement which Congress seems to have intended, Sections 101(f), 2012(c)(9), Congress states in Section 523(a) that "the Federal lands program shall, at a minimum, include the requirements of the approved State program." In so doing, Congress has provided the explicit mechanism by which State judgment on local conditions will be reflected in the Federal lands program. To avoid a subsequent amendment to the Federal lands program in each State upon adoption of a State program, and the administrative and implementation burdens it would impose upon the regulators and regulated companies, the Secretary believes this requirement of Section 523(a) provides added justification for implementing the second phase of the Federal lands program concurrently with State program implementation in all Federal lands States.

Other practical administrative and implementation considerations provide a reasoned basis for the Secretary interpreting his authority under Section 523 in this manner. Were the Secretary to implement a permanent Federal lands program in advance of State program implementation, operators with mines on commingled Federal and private lands would be subject to two different regulatory schemes, the permanent program on the Federal lands and the initial program on the private lands.

This would be so regardless of whether a cooperative agreement existed with a particular State. Congress did not want operators subject to two regulatory schemes.[1] Although this is evidenced by statements made in the context of discussing cooperative agreements, the rationale is equally applicable to non-cooperative agreement situations. Were the initial and permanent programs in effect at the same time for different portions of the same mine, different permit, bonding and performance standards would apply to different portions of one operation. This would create some confusion in terms of the permit information required for the different portions, burdens on the applicant to demonstrate the feasibility of reclamation, the rights of the public to participate in the review and approval process for the different portions and standards against which inspection and enforcement actions would be measured. In order to eliminate such confusion and to provide a clear, understandable regulatory program through which coal may be produced and the environment protected, the Secretary believes all surface coal mining operations, whether on Federal or private lands or both, should proceed under a uniform regulatory schedule.

The Montana petition urged postponement of the Federal lands program only for cooperative agreement States. Some commenters supported this approach: the Secretary has not accepted this approach because it perpetuates the confusion created by a dual regulatory scheme. This kind of approach would also not resolve the congressional concern that competitive imbalances not be created by operators in some States being subject to a less stringent or comprehensive regulatory program than in other States. Section 101(g). Thus, were the permanent phase of the Federal lands program to coincide with State program implementation in only the States with modified cooperative agreements, operators on Federal lands in those States would be subject to a less comprehensive regulatory program than would be operators on Federal lands in non-cooperative agreement States. In non-cooperative agreement States under the proposed amendment, operators of new mines or major extensions of existing mines would have been subject to the more comprehensive permanent phase of the Federal lands program. Arguably they would be at a competitive disadvantage because of the more costly permitting requirements and more comprehensive set of environmental performance standards. The only way to minimize the potential for inequity across State lines is to have the permanent phase of the Federal lands program coincide with State program implementation in all States as individual programs are approved or rejected. Thus, the regulations adopted in this notice do not distinguish between cooperative and non-cooperative agreement States.

The Secretary believes the comment suggesting that Federal lands in non-cooperative agreement States will not receive adequate protection reflects a misunderstanding of the effect of cooperative agreements. During the extended initial program pursuant to these rules, surface coal mining and reclamation operations on Federal lands in non-cooperative agreement States will be administered by OSM pursuant to authority in the Mineral Leasing Act, as amended, SMCRA, 30 CFR Part 211, and the terms and conditions of a lease or license. This will provide the same level of environmental protection for Federal lands as in cooperative agreement States. The only difference will be that the program will be administered exclusively by OSM, rather than jointly with a State.

Also, the Secretary does not believe that postponing the permanent Federal lands program will cause any significant adverse affect on Federal lands. A high-level of environmental protection will be maintained because all of the most important permanent program performance standards are also requirements of the initial regulatory program, as specified in Section 502(c) of SMCRA. A high degree of protection for Federal lands is also provided by the terms and conditions of the Federal coal lease and regulations in 30 CFR Part 211, adopted pursuant to the Mineral Leasing Act of 1920, as amended and SMCRA. Additionally, in States with cooperative agreements applicable State laws and regulations particularly those more stringent than Federal requirements will also remain in effect and will ensure protection of Federal lands.

In adopting a final rule, the Secretary has refrained from using undefined and non-specific terms and phrases, which concerned several commenters. This should alleviate much of the confusion and conflict which could have arisen between the operators and the regulatory authority.

With regard to the jurisdictional responsibility for the administration and regulation of surface coal mining operations involving Federal surface—private coal, the Secretary recognizes the ambiguity of the existing regulations. Efforts are currently underway which will clarify State and Federal roles in the administration and regulation of surface coal mining operations on lands involving Federal surface/private coal and private surface/unleased Federal coal.

The Secretary would also like to clarify that applications for approval of new mine plans or expanded operations submitted pursuant to 30 CFR 741.11(a)(2), as published March 13, 1979 (44 FR 15333) or pursuant to amended 30 CFR 741.11, as noted in this document, will be reviewed using the initial regulatory requirements of 30 CFR Part 211. Upon approval of a State program or implementation of a Federal program for a State, the operator would be required to submit a complete application for a permit in accordance with 30 CFR 741.11(a), as amended. This includes the submission of a mine plan which meets all the requirements of the permanent Federal lands program.

The Secretary reached this decision based on the argument that the permanent Federal lands program cannot be fully implemented until after approval or disapproval of a State program. Therefore, the Secretary concluded that no rational basis exists for continuing to review and approve mine plans submitted pursuant to 30 CFR 741.11(a)(2), as adopted on March 13, 1979. Such approvals would not be based upon the permanent Federal lands program as now interpreted by the Secretary through regulations adopted in this notice because State program conditions are not now reflected in the Federal lands regulations. The Secretary believes the permanent program requirements under the Act, as well as those to be incorporated in the Federal lands program from State programs, should be adopted at one time. This will eliminate one more sequence of amendments which would create new procedural and substantive obligations for operators and the regulatory authority.

As previously noted, several commenters, while supporting the proposed amendments, wanted

[1] S. Rep. No. 95-128, 95th Cong., 1st Sess. 95 (1977).

assurances that the petition process for designations would not be postponed. The Secretary at no time intended to postpone the applicability of the designation program to Federal lands. He believes a basis exists for not postponing the designation program and believes a few clarifying amendments are needed to ensure its continued applicability.

The so-called congressional designations were applicable by their terms following the date of enactment of the Act. "*After the enactment of this Act* and subject to valid existing rights, no surface coal mining operations except those which exist on the date of enactment of this Act shall be permitted—. . ." Section 522(e) (Emphasis added). Regulations establishing procedures for processing applications to mine in which these congressional designations are at issue, were promulgated on March 13, 1979. 30 CFR Part 761, 44 FR 15341. They properly referred to permits or permit applications because after the effective date of those regulations permits, not mine plans, would have been the document authorizing surface coal mining operations on Federal lands. Mine plans, which fill this function under the initial Federal lands program would no longer have been the controlling document.

Because the Federal lands permanent program permit requirements are being delayed by this rulemaking, certain clarifying amendments are being made to 30 CFR 701.1(b)(3) and Part 761. These are necessary to make clear that the congressional designations and petition process apply to *mine plan* applications filed under the initial Federal lands program in 30 CFR Part 211 as well as the permanent program *permit* procedures when implemented. Had the proposed amendments been adopted as final, such changes would not have been necessary because new mines would have remained subject to the permanent program permit requirements.

The congressional designations apply to operations on all Federal lands as defined in Section 701(4) of the Act. This includes Federal surface lands above private coal and private surface lands above Federal coal. Thus, notwithstanding any apparent limitation concerning the scope of the initial Federal lands program as stated in 30 CFR 211.1(a), the congressional designations do apply coal mine approvals on Federal surface above privately held coal.

For the same reasons noted above for the needed clarifications to 30 CFR 701.1(b)(3) and Part 761, the applicability of the petition process to Federal lands pursuant to 30 CFR Part 769 also needs clarification through limited amendments adopted in this document. Under the reasoning applied above, which relied upon the phrase "incorporate all of the requirements of this Act" in Section 523(a) as the basis for postponing the permanent phase of the Federal lands program, an argument could be made that the petition process to designate Federal lands should be delayed also. This is because the Section 522(c) petition process on non-Federal lands does not become applicable until a State program is approved. As a prerequisite to assuming primary regulatory authority jurisdiction under a State program, a State must establish a planning process enabling objective decisions concerning designations. (Section 522(a).)

Following this reasoning to its conclusion, one could argue that reliance upon the quoted language from section 523(a) to postpone implementation of the permit and performance standards requirements on Federal lands compels postponement of the designation petition process by analogy to the State program-petition process relationship. Blind application of that logic to this circumstance would call for ignoring certain important distinctions. The reasons for delaying the petition process for non-Federal lands until approval of State programs were to provide time for the States to develop an adequate planning process and have that process subject to public review during the State program approval process. However, that rationale is not applicable in the context of Federal lands. Under Section 522(b), the Secretary has begun an independent review of the Federal lands to determine whether any such lands are unsuitable for all or certain types of surface coal mining operations, utilizing among others the criteria in Section 522(a) (2) or (3). Secondly, in contrast to most States, Federal surface managing agencies already have established planning processes for making land use determinations on Federal lands, including lands unsuitable for coal mining under the Surface Mining Act and other statutory authorities. Federal Land Policy and Management Act of 1976 (43 U.S.C. 1701 *et seq.*); and other authorities cited at 43 CFR 3400.0–3, 44 FR 42609, July 19, 1979; 43 CFR Subpart 3461, 44 FR 42638, July 19, 1979; 43 CFR Part 1600, 44 FR 46386, August 7, 1979. The environmental impact and importance of this planning and designation process are analyzed in the Final Environmental Impact Statement for the Federal Coal Management Program, April 1979, at p. 3–31 through 3–52. Given that these planning mechanisms exist, the Secretary is fully prepared to respond to any Federal lands petitions which might be filed. Therefore, the absence of an adequate planning process is not a basis for delaying the petition process on Federal lands.

A further distinction is found in the statutory scheme which justifies implementing the petition process on Federal lands at this time while postponing application of the permanent program permitting and performance standards. Section 523 speaks in terms of incorporating State program requirements in Federal lands programs, as has been discussed. In addition, as has been shown, if implementation of the permitting and performance standards is not postponed, dual regulatory schemes would exist for commingled mines. On the other hand, Sections 523 (a) and (c) specifically provide that the Secretary is to retain responsibility for the designation process on Federal lands. Therefore, whereas language of Section 523 provides a basis for postponing the implementation of the permitting and performance standards in order to incorporate elements of State programs, the same section gives no basis for postponing the designation program on Federal lands.

The Secretary also believes that early implementation of the unsuitability designation regulations on Federal lands is desirable because early action will help clarify which Federal lands might be available for subsequent leasing and mining. In particular, this could help operators save time and money in both short and long-range coal development planning.

For these reasons the Secretary feels compelled to adopt limited and clarifying amendments to 30 CFR 701.1(b)(3) and Parts 761 and 769 to show that postponement of the permit and performance standards on Federal lands does not postpone the Federal lands designation program. The regulations which have been in effect since April 12, 1979, 44 FR 15312, established procedures for applying the congressional designations of section 522(e) and implemented the petition process of section 522(c). The clarifying amendments do no more than preserve the status quo with respect to the designation program on Federal lands.

OSM's amendments affect Parts 701, 741, 761 and 769 as follows:

1. 30 CFR 701.1 Scope, is an introductory section outlining the general applicability of certain regulations to the permanent regulatory

program. Paragraph 30 CFR 701.1(b)(3) of this section is revised to conform to amendments to 30 CFR 701.11, 30 CFR 741.11 and 30 CFR Parts 761 and 769. The effect of the amendment merely maintains the status quo, whereby Federal lands are subject to the congressional designations and the petition process for designating Federal lands unsuitable for all or certain types of surface coal mining operations and for terminating previous designations as of the effective date of the permanent regulations (April 12, 1979).

2. 30 CFR 701.11 Applicability, is a general statement of applicability of the performance standards and mirrors the existing requirements of § 741.11. This section is, therefore, revised to reflect accurately the amendment to the latter Section which postpones operator compliance with the permanent Federal lands program until approval of a State program or implementation of a Federal program for a State. Paragraph (b) has been amended to conform with amendments to 30 CFR 741.11. Existing paragraph (c) has been deleted because under the amended rules, all operations will be on the same schedule. Operations described in this paragraph are now covered in paragraph (b). Existing paragraphs (d) and (e) are renumbered (c) and (d), respectively, and are amended to conform with the amendments to 30 CFR 741.11. Existing paragraph (f) is renumbered (e).

3. 30 CFR 741.11 has been restructured and rewritten. As amended, paragraph 741.11(a) incorporates the provisions of existing § 741.11(c)(1) and (c)(2). The effect of this change is to eliminate the requirement that operators having an approved mining plan under 30 CFR 211 comply with the permanent performance standards in Subchapter K on and after October 12, 1979. This change also eliminates the requirement that applications for approved new or expanded mining operations, submitted after April 12, 1979, comply with the requirements of 30 CFR 741.13, 30 CFR 742, and 30 CFR 744 as of that date. All operations on Federal lands will be subject to the initial program requirements until approval of a State program or implementation of a Federal program for a State. Paragraph 741.11(b) of the existing rules remains unchanged. Paragraph (c), as previously indicated, is restructured and renumbered (a). Paragraph 741.11(d) is renumbered (c), and the reference to "Paragraph (c)" is revised to read "(a)". Finally, existing Paragraph (e) is redesignated (d).

4. 30 CFR 761.1 Scope, is revised to clarify terminology; the term "authorized" is substituted for "permitted". 30 CFR 761.4 (a)(1) and (a)(2) are amended to reflect that mine plan applications filed under the initial program are also subject to the provisions of Section 522(e) of the Act. Clarifying language has been added to 30 CFR 761.5(a)(2)(ii). 30 CFR 761.12(a), (b)(2), (c), (e), (f)(1), and (f)(2) have also been revised to conform with the amendments to 30 CFR 761.4.

5. 30 CFR 769.7(b) and (c) include clarifying language and a new paragraph 30 CFR 769.7(d) is added to conform with the limited and clarifying amendments to 30 CFR Part 761. Similarly, 30 CFR 769.14(i) and 769.17(d) are amended to provide continuity with amendments to 30 CFR Part 761.

Public Meetings

In response to specific requests, representatives of the Office and Departmental officials met twice with State and industry representatives on the substance of the proposed revision between October 2, 1979 and October 18, 1979. Summaries of each of these meetings have been prepared and are on file in the Administrative Record Office, Room 135, South Interior Building, 1951 Constitution Avenue, Washington, D.C. 20240 and the Office of Surface Mining, Region V, Post Office Building, 1832 Stout Street, Denver, Colorado 80205. Issues raised at these meetings were fully considered in developing the final rule.

Public Hearings

A public hearing was held October 18, 1979, at 9 a.m., Room 269 of the Old Post Office Building, Denver, Colorado, to receive oral and written comments on the proposed revision. Transcripts of the testimony presented were placed in the administrative record and were reviewed and analyzed along with other written comments. Copies of the hearings transcripts are available for public inspection in the Administrative Record Office, Room 135, South Interior Building, 1951 Constitution Avenue, Washington, D.C. 20240 and the Office of Surface Mining, Region V, Post Office Building, 1832 Stout Street, Denver, Colorado 80205.

OTHER INFORMATION: Pursuant to 43 CFR Part 14, the Assistant Secretary, Energy and Minerals has determined that the amendments to 30 CFR 701.11, 741.11, 761 and 769 are not a significant action and, therefore, do not require a regulatory analysis. The revised rule will not have a major and national or regionwide impact on State or local governments. The initial regulation procedures of Section 502 of the Act, 30 CFR 211 and existing State laws will remain in effect and will provide a level of protection for the public health and safety and the environment comparable to that on non-Federal lands. Additionally, the amended rule will not impose any new recordkeeping or reporting requirements on the States or industry. No new information will be required.

Also, the amended rule does not constitute a major Federal action for which an environmental impact statement is required by Section 102(2)(C) of the National Environmental Policy Act of 1969. The amended rule is part of the implementation of the Federal lands program which has a special exemption under Section 702(d) of the Act which specifies that ". . . implementation of the Federal lands program . . . shall not constitute a major action within the meaning of Section 102(2)(C) of the National Environmental Policy Act of 1969 (42 U.S.C. 4332)."

Finally, the amended rule is not a significant action, because it will not have a major impact on other programs of the Department, other Federal agencies or the allocation of Federal funds nor would it have a substantial effect on the entire economy or on an individual region, industry, or level of government. Postponing the compliance date will not affect the Department's coal management program leasing schedule nor will it involve a reallocation of agency funding. The amended schedule will not increase the cost to State governments, and because of more uniform application and administration of program requirements, the new rule will permit a smoother transition form the initial regulatory program to the permanent program, thus, reducing costs of administering the program. Coal mine operators may also benefit from reduced cost of operations because of the less comprehensive regulatory program. Such benefits, however, are thought to be of minor consequence and will be temporary in nature.

The principal author of this notice, in consultation with the Solicitors Office, is John R. Carlson, Division of State and Federal Programs, Office of Surface Mining.

Dated: December 21, 1979.

Joan M. Davenport,

Assistant Secretary, Energy and Minerals.

1. Accordingly, 30 CFR 701.1(b)(3) is revised to read as follows:

§ 701.1 Scope.

* * * * *

(b)(3) Subchapter F on criteria for designating lands unsuitable for surface coal mining operations and the process for designating these lands or

withdrawing the designation by the regulatory authority; provided that, Part 761 is applicable during the initial regulatory program under Subchapter B of this Chapter and 30 CFR Part 211 and that Part 769 and other Parts incorporated therein are applicable to the initial Federal lands program under 30 CFR Part 211.

* * * * *

2. 30 CFR § 701.11 is amended by revising paragraph (b), deleting paragraph (c), redesignating and revising paragraphs (d) and (e) as paragraphs (c) and (d), respectively, and redesignating paragraph (f) as paragraph (e). As amended, § 701.11 reads as follows:

§ 701.11 Applicability.

* * * * *

(b) Any person who conducts surface coal mining and reclamation operations on Federal lands on and after 8 months from the date of approval of a State program or implementation of a Federal program for the State in which the Federal lands are located shall have a permit issued pursuant to 30 CFR Part 741. However, under conditions specified in 30 CFR Part 741.11(c), a person may continue such operations under a previously approved mine plan pursuant to 30 CFR Part 211 after 8 months after the date of approval of a State program or implementation of a Federal program.

(c) The requirements of Subchapter K of this Chapter shall be effective and shall apply to each surface coal mining and reclamation operation which is required to obtain a permit under the Act, on the earliest date upon which the Act and this Chapter require a permit to be obtained, except as provided in paragraph (d) of this section.

(d)(1) Each structure used in connection with or to facilitate a coal exploration or surface coal mining and reclamation operation shall comply with the performance standards and the design requirements of Subchapter K of this chapter, except that—

(i) An existing structure which meets the performance standards of Subchapter K of this chapter but does not meet the design requirements of Subchapter K of this chapter may be exempted from meeting those design requirements by the regulatory authority. The regulatory authority may grant this exemption only as part of the permit application process after obtaining the information required by 30 CFR 780.12 or 784.12 and after making the findings required in 30 CFR 786.21;

(ii) If the performance standard of Subchapter B of this chapter is at least as stringent as the comparable performance standard of Subchapter K of this chapter, an existing structure which meets the performance standards of Subchapter B of this chapter may be exempted by the regulatory authority from meeting the design requirements of Subchapter K of this chapter. The regulatory authority may grant this exemption only as part of the permit application process after obtaining the information required by 30 CFR 780.12 or 784.12 and after making the findings required in 30 CFR 786.21;

(iii) An existing structure which meets a performance standard of Subchapter B of this chapter which is less stringent than the comparable performance standards of Subchapter K of this chapter or which does not meet a performance standard of Subchapter K of this chapter, for which there was no equivalent performance standards in Subchapter B of this chapter, shall be modified or reconstructed to meet the performance and design standard of Subchapter K of this chapter pursuant to a compliance plan approved by the regulatory authority only as part of the permit application as required in 30 CFR 780.12 or 784.12 and according to the findings required by 30 CFR 786.21;

(iv) An existing structure which does not meet the performance standards of Subchapter B of this chapter and which the applicant proposes to use in connection with or to facilitate the coal exploration or surface coal mining and reclamation operation shall be modified or reconstructed to meet the performance and design standards of Subchapter K prior to issuance of the permit.

(2) The exemptions provided in paragraph (d)(1)(i) and (d)(1)(ii) shall not apply to:

(i) The requirements for existing and new waste piles used either temporarily or permanently as dams or embankments; and

(ii) The requirements to restore to the approximate original contour of the land.

* * * * *

3. 30 CFR § 741.11 is amended by revising paragraph (a), deleting paragraph (c), redesignating and revising paragraph (d) as paragraph (c), and redesignating paragraph (e) as paragraph (d). As amended, § 741.11 reads as follows:

§ 741.11 General obligations.

(a) Not later than two months after the effective date of a State program or a Federal program for a State and regardless of litigation contesting the promulgation of this Subchapter each person who conducts or expects to conduct surface coal mining and reclamation operations on Federal lands after the expiration of eight months from such effective date shall file a complete application for a permit for those operations, and except as provided in paragraph (c) of this section, on and after eight months from the effective date of a State program or a Federal program for a State, no person shall conduct surface coal mining and reclamation operations on Federal lands, unless that person has first obtained a valid permit issued by the Regulatory Authority under the Act and this part.

* * * * *

(c) A person who conducts surface coal mining and reclamation operations, under a mining plan approved by the Secretary in accordance with the Act and 30 CFR Part 211, may conduct those operations beyond the eight month period prescribed in paragraph (a) of this section, if all of the following conditions are present:

(1) Timely and complete application for a permit to conduct those operations under this part has been made to the Regional Director in accordance with the provisions of the Act and this part;

(2) The Director has not yet rendered a final decision with respect to the permit application pursuant to 30 CFR 741.21(a)(4) and

(3) Those operations are conducted in compliance with all terms and conditions of the approved mining plan and the requirements of the Act, 30 CFR Part 211, State laws and regulations applicable through an approved cooperative agreement, and the requirements of the applicable lease or license.

(d) Upon issuance of a new permit under this Part, the permittee shall conduct surface coal mining and reclamation operations in accordance with all requirements of the permit, and lease or license, this part and all other applicable State and Federal regulations.

* * * * *

4. 30 CFR 761.1 is revised to read as follows:

§ 761.1 Scope.

This Part establishes the procedures and standards to be followed in determining whether a proposed surface coal mining and reclamation operation can be authorized in light of the prohibitions and limitations in Section 522(e) of the Act for those types of operations on certain Federal, public and private lands.

5. 30 CFR § 761.4 (a)(1) and (a)(2) introductory text is revised to read as follows:

§ 761.4 Responsibility.

(a) The Secretary shall—(1) Determine whether any application for a mine plan under the initial Federal lands program or permit under the permanent Federal lands program for surface coal mining and reclamation operations on Federal lands must be denied, limited or conditional because operations on those lands are prohibited or limited by Section 522(e) of the Act (30 U.S.C. 1272(e)) and this Part;

(2) Determine, based upon a showing by an applicant, whether a mine plan applicant or an applicant for a permit covering Federal lands either—

* * * * *

6. 30 CFR 761.5(a)(2)(ii) is revised to read as follows:

§ 761.5 Definitions.

* * * * *

(a)(2)(ii) Can demonstrate to the regulatory authority that the coal is both needed for, and immediately adjacent to, an on-going surface coal mining operation for which all mine plan approvals and permits were obtained prior to August 3, 1977;

* * * * *

7. 30 CFR § 761.12 is amended by revising paragraphs (a), (b)(2), (c), (e), (f)(1) introductory text, and (f)(2) to read as follows:

§ 761.12 Procedures.

(a) Upon receipt of a complete mine plan application pursuant to 30 CFR Part 211 or a complete application for a surface coal mining and reclamation operation permit, the regulatory authority shall review the application to determine whether surface coal mining operations are limited or prohibited under § 761.11 on the lands which would be disturbed by the proposed operations.

* * * * *

(b)(2) If the regulatory authority is unable to determine whether the proposed operation is located within the boundaries of any of the lands in § 761.11(a) or closer than the limits provided in § 761.11 (f) and (g), the regulatory authority shall transmit a copy of the relevant portions of the mine plan or the permit application to the appropriate Federal, State or local government agency for a determination or clarification of the relevant boundaries or distances, with a notice to the appropriate agency that it must respond within 30 days of receipt of the request.

(c) Where the proposed operation would include Federal lands within the boundaries of any national forest, and the applicant seeks a determination that mining is permissible under § 761.11(b) of this Part, the applicant shall submit a mine plan or a permit application to the Regional Director for processing under 30 CFR Part 211 or 30 CFR Subchapter D respectively. Before acting on the mine plan or permit application, the Director shall insure that the Secretary's determination has been received and the findings required by Section 522(e)(2) of the Act (30 U.S.C. 1272(e)(2)) have been made.

* * * * *

(e) Where the proposed surface coal mining operations would be conducted within 300 feet measured horizontally of any occupied dwelling, the mine plan or permit applicant shall submit with the application a written waiver from the owner of the dwelling, consenting to such operations within a closer distance of the dwelling as specified in the waiver. The waiver must be knowingly made and separate from a lease or deed unless the lease or deed contains an explicit waiver.

(f)(1) Where the proposed surface coal mining operation may adversely affect any public park or any places included on, or eligible for listing on, the National Register of Historic Places, the regulatory authority shall transmit to the Federal, State or local agencies with jurisdiction over a statutory or regulatory responsibility for the park or historic place a copy of the completed mine plan or permit application containing the following:

* * * * *

(f)(2) A mine plan approval or permit for the operation shall not be issued unless jointly approved by all affected agencies.

* * * * *

8. 30 CFR § 769.7 is amended by revising paragraphs (b) and (c) and adding a new paragraph (d) to read as follows:

§ 769.7 Regulatory policy.

* * * * *

(b) Once an area of Federal lands is designated as unsuitable for all or certain types of surface coal mining operations, the authorized officer shall condition any mine plan, permit or lease in a manner so as to limit or prohibit surface coal mining operations on the designated area.

(c) Review of applications for permits on Federal lands under the permanent Federal lands program is subject to the provisions of 30 CFR Part 741 and 786.19(d)–(e).

(d) Review of mine plan applications for Federal lands under the initial Federal lands program is subject to the provisions of 30 CFR Part 211.

9. 30 CFR 769.14(i) is revised to read as follows:

§ 769.14 Procedures: Initial processing, recordkeeping, and notification requirements.

* * * * *

(i) Any petitions received after the close of the public comment period on the notice of availability of a mine plan under 30 CFR 211.5(b) or on a permit application relating to the same mine plan area shall not prevent the Assistant Secretary, Energy and Minerals, from approving a mine plan or the Director from issuing a decision on a permit application. The Regional Director may return any petitions received thereafter to the petitioner with a statement why the Regional Director cannot consider the petition. For the purposes of this Section, close of the public comment period for the purposes of permanent program permits shall mean at the close of any informal conference held under 30 CFR 786.14 or, if no conference is requested, at the close of the period for filing written comments and objections under 30 CFR 786.12–13.

* * * * *

10. 30 CFR 769.17(d) is revised to read as follows:

§ 769.17 Procedures: Hearing requirements.

* * * * *

(d) If any petition relates to an area of Federal lands which is the subject of a pending surface coal mining and reclamation operations mine plan or permit application, the Regional Director may, with consent of all petitioners and intervenors, coordinate the hearing on the petition required under paragraph (a) of this section with any hearing on the mine plan or informal conference held in accordance with Section 513(b) of the Act and 30 CFR 741.18 on the permit application. Nothing in this Paragraph shall relieve a mine plan applicant or an applicant for a permit from the burden of establishing that his or her application is in compliance with the requirements of the Federal lands program.

* * * * *

[FR Doc. 79-39787 Filed 12-28-79; 8:45 am]
BILLING CODE 4310-05-M

---

30 CFR Parts 715, 717, 816 and 817

Surface Coal Mining and Reclamation Operations; Interim and Permanent Regulatory Program

AGENCY: Office of Surface Mining Reclamation and Enforcement (OSM), U.S. Department of the Interior.

ACTION: Notice of suspension and withdrawal of certain rules in 30 CFR Chapter VII, Subchapters B and K; and statement of policy regarding effect on State programs and enforcement during initial and permanent program.

SUMMARY: This notice suspends the current OSM rainfall exemption regulations from numerical effluent suspended solids limits and also suspends or withdraws portions of the sedimentation pond design criteria in both the initial and permanent surface coal mining and reclamation operations regulatory programs. This suspension will remain in effect pending further rulemaking to consider modification of the affected rules. In the interim, all surface coal mining and reclamation operations will still be subject to the applicable effluent limits and requirements to control all drainage through one or more properly designed sedimentation ponds. However, OSM will authorize the award of exemptions from the total suspended solids effluent limits by using the appropriate elements of USEPA's revised precipitation event exemption regulations, 40 CFR 434.22(c), 434.25(c), 434.32(b), 434.35(b), 434.42(b), 434.45(b), as amended.

EFFECTIVE DATE: December 31, 1979.

FOR FURTHER INFORMATION CONTACT: Jose R. del Rio, Civil Engineer, Division of Technical Services, Office of Surface Mining, U.S. Department of the Interior, South Building, 1951 Constitution Avenue, N.W., Washington, D.C. 20240; (202) 343-4022.

SUPPLEMENTAL INFORMATION: On March 13, 1979, OSM issued permanent program regulations which included sediment control performance standards in Subchapter K (30 CFR 816.42, 816.46 and 817.42, 817.46). Limitations on the total suspended solids (TSS) content of effluent discharged by surface coal mining and reclamation operations from disturbed areas are given at 30 CFR 816.42(a)(7) and 817.42(a)(7). The limitations of 70 mg/1 maximum allowable and 35 mg/1 average of daily values for 30 consecutive discharge days were essentially the same as those established by EPA under the Clean Water Act, 33 U.S.C. 1251, *et seq.*, for the coal mining point-source category, 40 CFR 434.22, 434.25, 434.32, 434.35, 434.42 and 434.45. To attain the TSS effluent standards, the OSM regulations required that operators utilize all necessary sediment control measures (e.g., 30 CFR 816.41, 816.45), including passing all runoff through sedimentation ponds. See, e.g. 30 CFR 816.42(a)(1) and 817.42(a)(1). The rules also set forth design criteria for these ponds governing, *inter alia*, (1) minimum sediment storage volume, 30 CFR 816.46(b) and 817.46(b); (2) minimum runoff detention time, 30 CFR 816.46(c) and 817.46(c); (3) minimum discharge rate for dewatering devides, 30 CFR 816.46(d) and 817.46(d); and (4) minimum sediment removal frequency, 30 CFR 816.46(h) and 817.46(h). The regulations also contained an exemption from the TSS effluent limits during certain precipitation events:

> §§ 816.42 and 817.42—(b) A discharge from the disturbed areas is not subject to the effluent limitations of this Section, if—
>
> (1) The discharge is demonstrated by the discharge to have resulted from a precipitation event equal to or larger than a 10-year 24-hour precipitation event; and
>
> (2) The discharge is from facilities designed, constructed, and maintained in accordance with the requirements of this Part.

An operator was eligible for this exemption only if his or her pond met OSM criteria *and* the discharge from the pond was caused by an actual 10-year 24-hour precipitation event. The same requirements for the surface effects of underground mining are found in §§ 817.42 and 817.46. To test the utility of OSM's pond design criteria for meeting TSS effluent limits, OSM and EPA commissioned two studies which were completed this summer: Skelly and Loy "Evaluation of Performance Capability of Surface Mine Sediment Basins" and D'Appolonia's "Evaluation of Sedimentation Pond Design Relative to Capacity and Effluent Discharge." Notice of the availability of these documents was published by EPA in the Federal Register on August 4, 1979. 44 FR 47595.

On September 21, 1979, the Joint National Coal Association/American Mining Congress Committee on Surface Mining Regulations (NCA/AMC) petitioned OSM to immediately suspend the TSS effluent limits and sedimentation pond design criteria, and to reconsider those regulations in light of the studies. On October 18, 1979, OSM published notice of receipt of the petition and solicited comments on whether it should be granted. 44 FR 60226.

As a result of information in the record as a whole, including the data contained in the recent studies and the comments on NCA/AMC's petition, OSM has decided, first, to grant the petition in part by suspending today certain rules of its permanent program rules, pending further modification through rulemaking. As a related matter, OSM is also today suspending or withdrawing the corresponding rules of the initial regulatory program, 30 CFR 715.17 and 717.17

Summary and Basis for Suspension

A. *Interrelationship of EPA and OSM Rules.* In developing regulations for effluents from coal mining operations, OSM has always been aware that there were certain circumstances under which it was unlikely, if not impossible, for operators to comply with the TSS effluent limits. Under both the initial program (30 CFR 715.17(a)(1) and 717.17(a)(1)) and the permanent program (30 CFR 816.42(b) and 817.42(b)), an operator has been excused from meeting effluent limits for discharges from the disturbed area resulting from a 10-year 24-year precipitation event. However, the Skelly and Loy study indicated that even using OSM design criteria, ponds could not meet the TSS effluent limits during the precipitation events which were modeled. OSM has previously noted (44 FR 60226):

> That the matters covered in the (NCA/AMC) petition are related to the U.S. Environmental Protection Agency (EPA) regulations (40 CFR 434) covering the coal industry under the National Pollutant Discharge Elimination System (NPDES) of the Clean Water Act, 33 U.S.C. 1251 *et seq.* On April 26, 1977, EPA promulgated final regulations establishing effluent limitation guidelines based on best practicable control technology currently available (BPT) for existing sources in the coal mining point source category 42 FR 21380. On January 12, 1979, EPA promulgated standards of performance for new sources (NSPS) within the coal mining category based on the best available demonstrated control technology. 44 FR 2586. Both sets of EPA regulations on numerical effluent limitations for discharges of total suspended solids are similar to those promulgated by OSM at 30 CFR. 816.42(a)(7) and 817.42(a)(7).
>
> After having previously revised its catastrophic rainfall exemption for the BPT regulations to conform to the corresponding provision in its NSPS regulations, EPA revised the exemption provision for both the BPT and NSPS rules on July 6, 1979. 44 FR 39391-39392. At that time EPA solicited public comment on what type of final revised rainfall exemption should be adopted at 40 CFR 434. Following the publication of the Skelly and Loy and D'Appolonia reports described above, EPA supplemented its request for comments to include consideration of those reports. 44 FR 47595 (August 14, 1979). On September 25, 1979, EPA extended this public comment period from a deadline of October 3, 1979, to October 19, 1979. 44 FR 55223.

Comments received by OSM on the NCA/AMC petition and by EPA on its proceedings were reviewed by a joint agency working group in order to coordinate agency action on this common issue.

EPA has advised OSM that its final rule on the rainfall exemption applicable to the coal industry will be published in the Federal Register in the immediate future. The orignial EPA exemption is found in 40 CFR Part 434, 434.22(c), 434.25(c), 434.32(b), 434.35(b), 434.42(b), 434.45(b), and will be revised to read as follows:

Any overflow, increase in volume of a discharge or discharge from a by-pass system caused by precipitation or snowmelt shall not be subject to the limitations set forth in paragraph (a) of this section. This exemption shall be available only if the facility is designed, constructed and maintained to contain or treat the volume of water which would fall on the areas covered by this subpart during a 10-year 24-hour or larger precipitation event (or snowmelt of equivalent volume). The operator shall have the burden of demonstrating to the appropriate authority that the prerequisites to an exemption set forth in this subsection have been met.

In the preamble to the final rule, EPA will also indicate that it is continuing to gather information on the entire TSS issue and anticipates proposing further amendments to its effluent limitation regulations in the spring of 1980. OSM will continue to cooordinate its rulemaking actions closely with EPA on this issue and intends to propose amendments to its own rules at or about the same time as EPA.

B. *The Total Suspended Solids Effluent Limitations.* The primary reason for the suspension of the existing OSM rainfall exemptions is recognition of the fact that the record does not contain substantial data correlating total suspended solids effluent quality with particular rainfall levels. Therefore, OSM is unable to fairly determine what suspended solids concentrations result on the national scale from the use of conventional physical sediment removal technologies during major precipitation events when a sediment pond's required containment capacity (i.e., run off from a 10-year 24 hour storm) is exceeded. Moreover, the record does not disclose what TSS concentration will occur during these types of storm events, if chemical treatment is used in lieu of, or in addition to physical sediment removal.

The effectiveness of both physical and chemical treatment in this regard will be better known in the near future when the results of EPA's current data-collection efforts are known. At that time, the data deficiencies discussed above should be cured. Then, specific rainfall-level TSS effluent limits can be established, premised on best available physical and/or chemical sediment removal technologies.

Finally, OSM notes that substantial criticism of the model utilized in the Skelly and Loy studies was raised by commenters, some of whom claimed that it under predicted suspended solids discharges and others arguing that it was too conservative. OSM agrees that the model probably did not perfectly predict actual mine performances, particularly since the study did not include detailed validation sampling of sediment size distributions and effluent values during high-intensity rainfalls. However, the model does show that, in the absence of such sampling, it is questionable that the 35/70 mg/1 values can be used during substantial rainfalls. Moreover, the model results did not in any way disprove the conclusion reached long ago that the numerical effluent limits can be achieved during base flows.

As OSM understands NCA/AMC's petition, its primary objection to 30 CFR 816.42(a)(7) and 817.42(a)(7) was that the effluent limitations established therein for TSS solids could not be achieved during substantial precipitation events by the use of conventional physical sediment removal technologies. NCA/AMC contended that, primarily because of the conclusion of the Skelly and Loy report, those effluent limitations could not be achieved during substantial precipitation events with the use of sediment control meaures required by 30 CFR 816.46 and 817.46. OSM received a range of comments on this aspect of the NCA/AMC's petition.

Some commenters said that the TSS limits could not be met at any time. OSM disagrees. During "base flows," that is when flows from the disturbed area are not the direct result of a substantial precipitation event, the weight of the available data shows that the TSS effluent limits can be achieved. See preamble to 30 CFR 816.42 at 44 FR 15151–15156. Moreover, the Skelly and Loy report itself showed that these limits could be met during base flows, a matter also confirmed by the original EPA "Development Document", supporting EPA's effluent limit regulations. As a related matter, OSM has rejected comments which objected to the establishment of generic TSS effluent limitations, rather than on a case-by-case basis according to the water quality of particular receiving streams. The effluent limitations are the expression of measuring the use of "best available control technology" under Sections 515(b)(10)(B) and (b)(24) of the Surface Mining and Control Act (SMCRA) and similar technology requirements under the Clean Water Act. Uniform effluent limits are needed to ensure a national minimum level of uniformity in furtherance of congressional policy. See Sections 101(g) and 102(g) of SMCRA.

Other commenters supported NCA/AMC's petition on the basis of the Skelly and Loy Report's conclusions that the TSS effluent limitation could not be met during substantial rainfalls. After careful analysis of all the relevant data, OSM has decided that this material tends to establish that these effluent limitations may not be achievable with the use of conventional physical sediment removal measures only when flows are in direct response to a substantial rainfall or snowmelt. As a result, OSM has decided to suspend its existing precipitation event exemption at 30 CFR 816.42(b) and 817.42(b).

In place of those rules, OSM instead will authorize the granting of exemptions for sediment discharges from the disturbances according to the elements of the corresponding exemption allowable under EPA's rules 40 CFR 434.22(c), 434.32(b), and 434.42(b). We note that EPA intends to issue a final amended rainfall exemption rule in the near future. OSM will, of course, utilize the elements of the revised EPA rule until a change to the OSM rules can be make by further rulemaking. We note that the corresponding rainfall exemption under our initial program rules (30 CFR 715.17(a)(1) and 717.17(a)(1)) will be similarly suspended and the relevant elements of EPA's revised rainfall exemption used in lieu thereof.

However, the application of the rainfall exemption by OSM will differ from that of EPA. The OSM TSS effluent limitations apply to all "disturbed areas" as that term is defined in 30 CFR 701.5 and 816.42, and apply throughout the reclamation phase of mining as that term is defined in 30 CFR 701.5, whereas the EPA TSS effluent limitations apply only to the active mining area or to mixed discharges from the active and reclamation areas. Therefore, OSM will allow for rainfall exemption to all "disturbed areas" throughout the life of a surface coal mining and reclamation operation (i.e., until bond release) by us of the elements of EPA's revised exemption.

C. *Sedimentation Pond Design Criteria.* The NCA/AMC petition also requested immediate suspension and reconsideration of OSM sedimentation pond design criteria in light of information contained in the Skelly and Loy study. OSM design criteria for ponds in Section 816.46 and 817.46 require, among other factors (1) minimum sediment storage capacity, (2) minimum detention time, (3) minimum

standards for dewatering devices, (4) prohibitions on short-circuiting, (5) minimum emergency spillway requirements, (6) minimum sediment removal frequency, and (7) various pond embankment design standards. These design criteria for ponds were formulated on the expectation that they would result in operators meeting the TSS effluent limitations of §§ 816.42(a)(7) and 817.42(a)(7).

Commenters supporting the petition urged OSM to suspend its design criteria. It was argued that the record showed that OSM designed ponds could not meet effluent limitations during substantial precipitation events; that OSM ponds could not remove fine sediment particles during precipitation events even with maximum detention time; and that OSM ponds were too large and too costly. Because of the data contained in the studies and the comments, OSM has decided to suspend certain of its specific design criteria pending further rulemaking. The methods for determining minimum sediment storage volume and detention time will be suspended, but the general requirements that ponds provide a minimum sediment storage volume (§§ 816.46(b) and 817.46(b)) and that ponds hold the volume of water resulting from a 10-year 24-hour precipitation event (§§ 816.46(c) and 817.46(c)), will be retained. OSM believes that the portions of §§ 816.46(b)–(e) and 817.46(b)–(e) which are not being suspended are, in any event, equivalent to the technology required under the revised EPA rainfall exemptions.

In addition, OSM will suspend dewatering device requirements and sediment removal requirements which are tied to the specific sediment storage volume and theoretical detention time. General requirements that ponds have a dewatering device (§§ 816.46(d) and 817.46(d)) and that sediment be removed from ponds (§§ 816.46(h) and 817.46(h)) will be retained.

Some commenters objected that the use of a 10-year 24-hour event as the inflow standard around which pond performance is built was arbitrary. The use of the 10-year 24-hour event is required in order that OSM's rule be consistent with EPA's requirements. See 40 CFR 434.22(b), as amended. Additional discussion of this issue is found in 42 FR 46932 and 44 FR 15164.

In summary, OSM has decided to suspend certain specific design criteria relating to sediment storage capacity and detention time, and to initiate rulemaking on these questions. However, ponds still must be sufficient to handle a 10-year 24-hour event, and they are still subject to all other design criteria. Moreover, they must be safe and, therefore, will be required to meet the non-suspended portions of §§ 816.46 and 817.46.

OSM notes that the same commenters renewed objections made in prior rulemakings that no design criteria should exist for sediment pond. OSM did not accept those suggestions. National design criteria are necessary to implement §§ 515(b)(11)(B) and 515(b)(24) of the Act, to ensure a minimum level of national uniformity in the control of sediment. See §§ 101(g) and 102(a)–(d) of SMCRA.

Finally, we note that the reasons for suspension of certain portions of 30 CFR 816.45 and 817.46 justify corresponding changes to the equivalent requirements of the initial program rules, 30 CFR 715.17(e) and 717.17(e). The initial rules were revised and published on May 25, 1979, 44 FR 30610–30634, but have not yet been made effective as a result of the order of Judge Flannery on May 3, 1978. See, *In Re: Surface Mining Regulation Litigation,* 452 F. Supp. 321, (D.D.C. 1978). Therefore, OSM will withdraw the relevant provision of §§ 715.17(e) and 717.17(e). All other portions of §§ 715.17(e) and 717.17(e) will continue to stand for approval.

Statement of Policy Regarding Enforcement by OSM and Effects on State Programs

Enforcement

In the interim program OSM will continue to enforce the requirement that (1) all water from the disturbed area pass through a sediment pond or ponds, (2) all discharges from such ponds meet the effluent limitations, and (3) all other hydrologic protection requirements of 30 CFR 715.17 and 717.17, other than subsection (e), be complied with.

After the suspension, in the interim program OSM will enforce the effluent limitations including those for total suspended solids (TSS) contained in 30 CFR 715.17(a) and 717.17(a). For the purpose of granting rainfall exemptions in TSS discharges, OSM will utilize the applicable elements of EPA's revised rainfall exemption which is set forth above in the Supplemental Information and which will be published shortly by EPA.

The suspension of OSM's statement of the exemption and the adoption of the applicable elements of EPA's exemption will make the enforcement of the TSS limit more complex, but will achieve the same degree of environmental protection as the current interim regulations provide. When a violation of the TSS limits is observed and documented, the burden remains on the mine operator to demonstrate that the discharge is exempted. In order to show this the mine operator must show, first, that he or she has designed, constructed, and maintained the facility to contain or treat the volume of water which would run off into the pond during a 10-year 24-hour or greater precipitation event. Second, the mine operator must show that there has been an actual overflow, increase in volume of a discharge, or discharge from a by-pass system caused by a precipitation event. In order to do this, the operator may be required to produce concrete evidence such as photographs, hydrographs, weir measurements, baseflow data, etc., to show that the overflow, increase in volume, or bypass was caused by a precipitation event. Conclusory, self-serving statements will not suffice to justify an exemption. Moreover, since the operator must show that the discharge was caused directly by a precipitation event, pumping from the pond by the operator would not qualify for an exemption.

Field determination of whether an operator qualifies for an exemption will be left to the judgment of the inspector. Until such time as OSM adopts more specific design criteria for determining the adequate size of sediment ponds. OSM will utilize the major technical publications in the field to interpret the phrase "designed, constructed, and maintained to contain or treat the volume of water which would fall . . . during a 10-year 24-hour or larger precipitation event (or snowmelt of equivalent volume) . . ." on a case-by-case basis. These works include those cited in the Preamble to the Permanent Regulations at 44 FR 15142 to 15148 (March 13, 1979), especially those numbered 50, 53, 61, 62, 72, 141, 143, 144, 145, and 146. Notices of violations or cessation orders as appropriate will be written for effluent limitations violations, unless the inspector determines that the exemption applies. Appeal of an inspector's action will, of course, be available to operators and citizens through the administrative review process.

It is important to note what this rainfall exemption does not do. First, it has no effect on the requirement of 30 CFR 715.17(a) and 717.17(a) that all drainage from the disturbed area, including disturbed areas that have been graded, seeded, and planted, must pass through a sediment pond or ponds. Thus, there is no change in the OSM requirement of treatment through the reclamation process. Second, the use of the applicable elements of EPA's

exemption does not apply to any applicable limitation other than TSS. Third, the exemption does not relieve the mine operator of either treating water from the undisturbed area above the mining area that mixes with water from the disturbed area or diverting that water from the undisturbed area around and away from the pond. If an operator does not divert, his or her pond must be designed, constructed and maintained to hold or treat the entire volume of runoff that reaches the pond in the prescribed precipitation event in order to qualify for the exemption.

There are portions of 30 CFR 715.17(e) and 717.17(e) promulgated on May 25, 1979, and presently pending before the District Court for approval that are not here suspended. Those portions would require that sedimentation ponds have a minimum sediment storage capacity specified by the regulatory authority and that the sediment be removed from those ponds at a frequency specified by the regulatory authority. They would also impose certain safety criteria on ponds. OSM will press the District Court for approval of those remaining portions of 30 CFR 715.17(e) and 717.17(e). When approved, OSM will also enforce those requirements.

Effect on State Programs

OSM is concerned that the submission and approval of State programs proceed expeditiously without imposing an undue burden on the States and associated parties that may be affected by those areas where the suspension is proposed. This general guidance is offered to assist the States in preparing their programs for submission. OSM believes that effluent limitations, the rainfall exemption, and pond safety and size criteria will ordinarily be dealt with by a State in regulation rather than statute. Therefore, this suspension should pose no difficulty in preparation of State statutes, provided State statutes will allow the adoption of the necessary regulations.

The State program as a whole—statute and regulations together—must meet the following minimum criteria with respect to sediment control and sediment ponds. First, the program must provide that all discharge from the disturbed area will pass through a pond or ponds. Second, the applicable effluent limitations must be met. Third, the safety construction requirements must be met. Fourth, all other provisions of hydrologic balance requirements of the Act and regulations must be met. OSM anticipates that any pond that meets these standards is likely to qualify as an existing structure under 30 CFR 701.11(e) of the permanent program regulation and therefore will be exempted from reconstruction in the permanent program.

OSM will provide States an opportunity to amend or modify State programs or State program proposals should the Federal regulations dealing with pond size not be amended in sufficient time for States to include corresponding regulations in their State programs in their initial submission. Authorities for such adjustments include the provisions for modifications of proposals during the initial stage of program review in accordance with 30 CFR 732.11; for conditional approval under 30 CFR 732.13; or program amendment under 30 CFR 732.17.

Dated: December 21, 1979.

Joan Davenport,

Assistant Secretary, Energy and Minerals.

Notice of Suspended Regulations

Legal Authority.

Sections 101, 102, 201, 501, 503, 504, 505, 506, 507, 508, 509, 510, 515, 516, 517, 523, and 701, Surface Mining Reclamation Act of 1977, P.L. 95-87, 30 U.S.C. 1201, 1202, 1211, 1251-1260, 1265-1267, 1273, 1291.

Portions of the following regulations are hereby suspended or revoked, as listed below:

§ 715.17(a)(1) [Amended]

A. The following language is suspended insofar as it applies to TSS discharges:

(1) Any overflow or other discharge or surface water from the disturbed area within the permit area demonstrated by the permittee to result from a precipitation event larger than 10-year, 24-hour frequency event will not be subject to the effluent limitations of paragraph (a).

§ 715.17(e)(2) [Amended]

B. The following language is revoked:

". . . equal to—

(i) The accumulated sediment volume from the drainage area to the pond for a minimum of 3 years, sediment storage volume shall be determined using the Universal Soil Loss Equation, gully erosion rates, and the sediment delivery ratio converted to sediment volume, using either the sediment density or other empirical methods derived from regional sediment pond studies if approved by the regulatory authority; or

(ii) 0.1 acre-foot for each acre of disturbed area within the upstream drainage or a greater amount if required by the regulatory authority based upon sediment yield to the pond. The regulatory authority may approve a sediment storage volume of not less than 0.035 acre-foot for each acre of disturbed area within the upstream drainage area, if the person who conducts the surface mining activities demonstrates that sediment removed by other sediment control measures is equal to the reduction in sediment storage volume."

§ 715.17(e)(3) [Amended]

C. The following language is revoked:

". . . Theoretical detention time is defined as the average time that the design flow is detained in the pond; and is further defined as the time difference between the centroid of the inflow hydrograph and the centroid of the outflow hydrograph for the design event. Runoff diverted under sections 715.17(c) and 715.17(d), away from the disturbed drainage areas and not passed through the sedimentation pond need not be considered in sedimentation pond design. In determining the runoff volume, the characteristics of the mine site, reclamation procedures, and onsite sediment control, practices shall be considered. Sedimentation ponds shall provide a theoretical detention time of not less than twenty-four hours, or any higher amount required by the regulatory authority, except as provided under subparagraphs (i), (ii), or (iii) of this paragraph.

(i) The regulatory authority may approve a theoretical detention time of not less than 10 hours, when the person who conducts the surface mining activities demonstrates that—

(A) The improvement in sediment removal efficiency is equivalent to the reduction in detention time as a result of pond design. Improvements in pond design may include but are not limited to pond configuration, in-flow and out-flow facility locations, baffles to decrease in-flow velocity and short-circuiting, and surface areas; and

(B) The pond effluent is shown to achieve and maintain applicable effluent limitations.

(ii) The regulatory authority may approve a theoretical detention time of not less than 10 hours when the person who conducts the surface mining activities demonstrates that the size distribution or the specific gravity of the suspended matter is such that applicable and maintained.

(iii) The regulatory authority may approve a theoretical detention time of less than 24 hours to any level of detention time, when the person who conducts the surface mining activities demonstrates to the regulatory authority that the chemical treatment process to be used—

(A) Will achieve and maintain the effluent limitations; and

(B) Is harmless to fish, wildlife, and related environmental values.

(iv) The calculated theoretical detention time and all supporting documentation and drawings used to establish the required detention times under the subparagraph (3)(i)-(iii) of this Section shall be included in the permit application.

§ 717.15(e)(4) [Amended]

D. The following language is revoked:

"... and shall have a discharge rate to achieve and maintain the required theoretical detention time.

§ 717.15(e)(8) [Amended]

E. The following language is revoked:

"... when the volume of sediment accumulates to 60 percent of the design sediment storage volume. With the approval of the regulatory authority, additional permanent storage may be provided for sediment and/or water above that required for the design sediment storage. Upon the approval of the regulatory authority for those cases where additional permanent storage is provided above that required for sediment under Paragraph (2) of this Section, sediment removal may be delayed until the remaining volume of permanent storage has decreased to 40 percent of the total sediment storage volume provided the theoretical detention time is maintained."

§ 717.17(a)(3)(i) [Amended]

F. The following language is suspended insofar as it applies to TSS discharges:

(i) Any overflow or other discharge of surface water from the disturbed area within the permit area demonstrated by the permittee to result from a precipitation event larger than the 10-year 24-hour frequency event will not be subject to the effluent limitations of paragraph (a).

§ 717.17(e)(2) [Amended]

G. The following language is revoked:

"... equal to—

(i) The accumulated sediment volume from the drainage area to the pond for a minimum of 3 years or the life of the pond, whichever is greater. Sediment storage volume shall be determined using the Universal Soil Loss Equation, gully erosion rates, and the sediment delivery ratio converted to sediment volume. Conversions shall use either the sediment density or other empirical methods derived from regional sediment pond studies may be used if approved by the regulatory authority; or

(ii) 0.1 acre-foot for each acre of disturbed area within the upstream drainage area or a greater amount if required by the regulatory authority based upon sediment yield to the pond. The regulatory authority may approve sediment storage volume of not less than 0.0035 acre-foot for each acre of disturbed area within the upstream drainage area, if the person who conducts the underground mining activities has demonstrated that sediment removed by other sediment control measures is equal to the reduction in sediment storage volume; and

(iii) The accumulated sediment volume necessary to retain sediment for 1 year in any discharge from the underground mine passing through the pond."

§ 717.17(e)(3) [Amended]

H. The following language is revoked:

"... Theoretical detention time is defined as the average time that the design flow is detained in the pond; and is further defined as the time difference between the centroid of the inflow hydrograph and the centroid of the outflow hydrograph for the design event. Runoff diverted under Section 717.17(c) and 717.17(d) away from the disturbed drainage areas and not passed through the sedimentation pond, need not be considered in a sedimentation pond design. In determining the runoff volume, the characteristics of the mine site, reclamation procedures, and onsite sediment control practices shall be considered. Sedimentation ponds shall provide a theoretical detention time of not less than twenty-four hours, or any higher amount required by the regulatory authority, except as provided under Paragraphs (i), (ii), or (iii) of this Subsection.

(i) The regulatory authority may approve a theoretical detention time of not less than 10 hours, when the person who conducts the underground mining activities demonstrates that—

(A) The improvement in sediment removal efficiency is equivalent to the reduction in detention time as a result of pond design. Improvements in pond design may include but are not limited to pond configuration, in-flow and out-flow facility locations, baffles to decrease in-flow velocity and short-circuiting, and surface areas; and

(B) The pond effluent is shown to achieve and maintain applicable effluent limitations.

(ii) The regulatory authority may approve a theoretical detention time of not less than 10 hours when the person who conducts the underground mining activities demonstrates that the size distribution or the specific gravity of the suspended matter is such that applicable effluent limitations are achieved and maintained.

(iii) The regulatory authority may approve a theoretical detention time of less than 24 hours to any level of detention time, when the person who conducts the underground mining activities demonstrates to the regulatory authority that the chemical treatment process to be used—

(A) Will achieve and maintain the effluent limitations;

(B) Is harmless to fish, wildlife, and related environmental values;

(iv) The calculated theoretical detention time and all supporting documentation and drawings used to establish the required detention times under Subparagraphs (3)(iii) of this Section shall be included in the permit application."

§ 717.17(e)(4) [Amended]

I. The following language is revoked:

". . . and shall have a discharge rate to achieve and maintain the required theoretical detention time."

§ 717.17(e)(8) [Amended]

J. The following language is revoked:

". . . when the volume of sediment accumulates to 60 percent of the design sediment storage volume. With the approval of the regulatory authority additional permanent storage may be provided for sediment and-or water above that required for the design sediment storage. Upon the approval of the regulatory authority for those cases where additional permanent storage is provided above that required for sediment under Paragraph (2) of this Section, sediment removal may be delayed until the remaining volume of permanent storage has decreased to 40 percent of the total sediment storage volume provided the theoretical detention time is maintained."

Portions of the following regulations are suspended, as explained below:

§ 816.42(b) [Amended]

A. The following portion of 30 CFR 816.42(b) is suspended insofar as it applies to TSS discharges:

"(1) The discharge is demonstrated by the discharger to have resulted for the precipitation event equal to or larger than a 10-year 24-hour precipitation event; and

(2) The discharge is from facilities designed, constructed, and maintained in accordance with the requirements of this Part."

§ 816.46(b), (c), (d) and (h) [Amended]

B. 30 CFR 816.46(b)

". . . equal to—

"(1) The accumulated sediment volume from the drainage area to the pond for a minimum of 3 years. Sediment storage volume shall be determined using the Universal Soil Loss Equation, gully erosion rates, and the sediment volume, using either the sediment density or other empirical methods derived from regional sediment pond studies if approved by the regulatory authority; or

(2) 0.1 acre-foot for each acre of disturbed area within the upstream drainage area or a greater amount if required by the regulatory authority based upon sediment yield to the pond. The regulatory authority may approve a sediment storage volume of not less than 0.035 acre-foot for each acre of disturbed area within the upstream drainage, if the person who conducts the surface mining activities demonstrates that sediment removed by other sediment control measures is equal to the reduction in sediment storage volume."

C. 30 CFR 816.46(c)

". . . Theoretical detention time is defined as the average time that the design flow is detained in the pond; and is further defined as the time difference between the centroid of the inflow hydrograph and the centroid of the outflow hydrograph for the design event. Runoff diverted under Sections 816.43 and 816.44, away from the disturbed drainage areas and not passed through the sedimentation pond need not be considered in sedimentation pond design. In determining the runoff volume, the characteristics of the mine site, reclamation procedures, and onsite sediment contol practices shall be considered. Sedimentation ponds shall provide a theoretical detention time of not less than twenty-four hours, or any higher amount required by the regulatory authority, except as provided under subparagraphs (1), (2), or (3) of this paragraph.

(1) the regulatory authority may approve a theoretical detention time of not less than 10 hours, when the person who conducts the surface mining activities demonstrates that—

(i) The improvement in sediment removal efficiency is equivalent to the reduction in detention time as a result of pond design. Improvements in pond design may include but are not limited to pond configuration, in-flow and out-flow facility locations, baffles to decrease in-flow velocity and short-circuiting, and surface areas; and

(ii) The pond effluent is shown to achieve and maintain applicable effluent limitations.

(2) The regulatory authority may approve a theoretical detention time of not less than 10 hours when the person who conducts the surface mining activities demonstrates that the size distribution or the specific gravity of the suspended matter is such that applicable effluent limitations are achieved and maintained.

(3) The regulatory authority may approve a theoretical detention time of less than 24 hours to any level of detention time, when the person who conducts the surface mining activities demonstrates to the regulatory authority that the chemical treatment process to be used—

(i) Will achieve and maintain the effluent limitations; and

(ii) Is harmless to fish, wildlife, and related environmental values.

(4) The calculated theoretical detention time and all supporting documentation and drawings used to establish the required detention times under subparagraphs (c) (1)–(3) of this Section shall be included in the permit application."

D. 30 CFR 816.46(d)

". . . and shall have a discharge rate to achieve and maintain the required theoretical detention time.

E. 30 CFR 816.46(h)

". . . when the volume of sediment accumulates to 60 percent of the design sediment storage volume. With the approval of the regulatory authority additional permanent storage may be provided for sediment and/or water above that required for the design sediment storage. Upon the approval of the regulatory authority for those cases where additional permanent storage is provided above that required for sediment under Paragraph (b) of this Section, sediment removal may be delayed until the remaining volume of permanent storage has decreased to 40 percent of the total sediment storage volume provided the theoretical detention time is maintained."

§ 817.42(b) [Amended]

F. The following portion of 30 CFR 817.42(b) is suspended insofar as it applies to TSS discharges:

"(1) The discharge is demonstrated by the discharger to have resulted from a precipitation event equal to or larger than a 10-year, 24-hour precipitation event; and

(2) The discharge is from facilities designed, constructed, and maintained in accordance with the applicable requirements of this Part."

§ 817.46 (b) and (c) [Amended]

G. 30 CFR 817.46(b)

". . . equal to—

(1) The accumulated sediment volume from the drainage area to the pond for a minimum of 3 years of the life of the pond whichever is greater. Sediment storage volume shall be determined using the Universal Soil Loss Equation, gully erosion rates, and the sediment delivery ratio converted to sediment volume. Conversions shall use either the sediment density or other empirical methods derived from regional sediment pond studies may be used if approved by the regulatory authority; or

(2) 0.1 acre-foot for each acre of disturbed area within the upstream drainage area or a greater amount if required by the regulatory authority based upon sediment yield to the pond. The regulatory authority may approve a sediment storage volume of not less than 0.035 acre foot for each acre of disturbed area within the upstream drainage area, if the person who conducts the underground mining activities has demonstrated that sediment removed by other sediment control measures is equal to the reduction in sediment storage volume; and

(3) The accumulated sediment volume necessary to retain sediment for 1 year in any discharge from the underground mine passing through the pond."

H. 30 CFR 817.46(c)

". . . from a 10-year, 24-hour precipitation event (design event), plus the average inflow from the underground mine. Theoretical detention time is defined as the average time that the design flow is detained in the pond; and is further defined as the time difference between the centroid of the inflow hydrograph and the centroid of the outflow hydrograph for the design event. Runoff diverted under sections 817.43 and 817.44 away from the disturbed drainage areas and not passed through the sedimentation pond, need not be considered in sedimentation pond design. In determining the runoff volume, the characteristics of the mine site, reclamation procedures, and onsite sediment control practices shall be considered. Sedimentation ponds shall provide a theoretical detention time of not less than twenty-four hours, or any higher amount required by the regulatory authority, except as provided under Paragraphs (1), (2) or (3) of this Subsection.

(1) The regulatory authority may approve a theoretical detention time of not less than 10 hours, when the person who conducts the underground mining activities demonstrates that—

(i) The improvement in sediment removal efficiency is equivalent to the

reduction in detention time as a result of pond design. Improvements in pond design may include but are not limited to pond configuration, in-flow and out-flow facility locations, baffles to decrease in-flow velocity and short-circuiting, and surface areas; and

(ii) The pond effluent is shown to achieve and maintain applicable effluent limitations.

(2) The regulatory authority may approve a theoretical detention time of not less than 10 hours when the person who conducts the underground mining activities demonstrates that the size distribution or the specific gravity of the suspended matter is such that applicable effluent limitations are achieved and maintained.

(3) The regulatory authority may approve a theoretical detention time of less than 24 hours to any level of detention time, when the person who conducts the underground mining activities demonstrates to the regulatory authority that the chemical treatment process to be used—

(i) Will achieve and maintain the effluent limitations; and

(ii) Is harmless to fish, wildlife, and related environmental values.

(4) The calculated theoretical detention time and all supporting documentation and drawings used to establish the required detention times under Subparagraphs (c) (1)–(3) of this Section shall be included in the permit application."

[FR Doc. 79-39798 Filed 12-28-79; 8:45 am]
BILLING CODE 4310-05-M

---

30 CFR Parts 783, 785, 816, 817, and 823

Surface Mining and Reclamation Operations; Permanent Regulatory Program

AGENCY: Office of Surface Mining Reclamation and Enforcement (OSM), U.S. Department of the Interior.

ACTION: Notice of suspension.

SUMMARY: Notice is given that the Secretary intends to publish interpretations of certain rules and that others are suspended pending the outcome of rulemaking to consider modifications of those rules. Rules affected deal with negative determinations for prime farmlands, geologic descriptions of strata beneath surface operations and facilities associated with underground mines, alternative postmining land use determinations for underground mines, the permanent program prime farmland grandfather clause, the most bulk density criteria for prime farmland soil compaction, underdrain requirements for coal processing waste banks, ground water monitoring of recharge capacity for underground mines, and reference area requirements for certain underground mines.

EFFECTIVE DATE: December 31, 1979.

FOR FURTHER INFORMATION CONTACT: Paul L. Reeves, Deputy Director, Office of Surface Mining, U.S. Department of the Interior, Washington, D.C. 20240; (202) 343-4222.

SUPPLEMENTARY INFORMATION: On March 13, 1979, OSM published its permanent program regulations (44 FR 14901 *et seq.*) implementing Title V of the Surface Mining Control and Reclamation Act of 1977 (SMCRA), P.L. 95-87, 30 U.S.C. 1251-1279. As a result of issues raised during litigation on the permanent program regulations (*In re Permanent Surface Mining Regulation Litigation,* Civil Action No. 79-1144, Consolidated (D.D.C. filed May 1979)), OSM has recognized the need to propose changes to certain sections of those regulations and publish interpretations of others. A prior notice was published in the Federal Register suspending the effectiveness of certain regulations at issue in the "first round" of this litigation. 44 FR 67942 (November 27, 1979). The present notice suspends certain regulations at issue in the "second round" pending completion of rulemaking to consider their amendment and gives notice of intent to publish interpretations of other rules at issue in this litigation. Notices proposing revisions to or stating interpretations of the rules will be published in the Federal Register in the foreseeable future.

STATEMENT OF POLICY REGARDING STATE PROGRAMS: OSM is concerned that the submission and approval of State regulatory programs proceed expeditiously without imposing an undue burden on the States and associated parties that may be affected by those areas where rules are being suspended and new regulations will be proposed. This general guidance is offered to assist States in preparing their programs for submission. Where the suspended regulations have explicit underpinnings in SMCRA, States must still include corresponding statutory provisions in their program applications. For instance, although the Secretary is suspending his rule (30 CFR 785.17(a)) implementing the grandfather clause exemption from certain prime farmland requirements of the permanent program, State statutes must, nevertheless, contain a statutory provision corresponding to the statutory grandfather clause in Section 510(d)(2) of the SMCRA, 30 U.S.C. 1260(d)(2). Where a regulation has been suspended, the State program can have any regulatory provision or no regulatory provision at all, so long as the State program is in accordance with the requirements of the Act *and* is not inconsistent with regulations which were not suspended. OSM will provide States an opportunity to amend or modify State programs or State program proposals should the Federal regulations which are being suspended not be amended in sufficient time for States to include corresponding regulations in their initial State program submission.

Authorities for such adjustments include the provisions for modifications of proposals during the initial stage of program review in accordance with 30 CFR 732.11; for conditional approval under 30 CFR 732.13; or program amendment under 30 CFR 732.17.

NOTICE OF FUTURE ACTIONS: *30 CFR 779.27(b)(4) and 783.27(b)(4).* The Secretary intends to publish his interpretation of the phrase "other factors" in these sections as being limited solely to those factors contained in the Secretary of Agriculture's regulations for identification of prime farmland (7 CFR 657.5(a)(2)). Section 779.27(b)(4) and 783.27(b)(4) merely provide for a determination that lands within a proposed permit area clearly do not meet the USDA technical criteria for prime farmland as set forth at 7 CFR 657.5(a)(2). At no time did OSM intend that the reference to "other factors" extend to matters not expressly covered by § 657.5(a)(2).

30 CFR 783.22, 784.15, and 817.133. The Secretary intends to publish his interpretation of these regulations to allow an operator to apply through the permit revision or renewal procedures of 30 CFR 788.12-788.15 for regulatory authority approval of an alternative postmining land use toward the end of the life of an underground mine rather than obtaining such approval in the original permit, if the original permit demonstrates that the land will be returned to its premining land use capability as required by 30 CFR 817.133(a).

30 CFR 817.116. The Secretary will propose an amendment to this regulation comparable to that in 30 U.S.C. 816.116(d) for surface mines, to add a provision that, for underground mine permit areas of 40 acres or less in locations with an average annual precipitation of more than 26 inches, certain specified performance standards may be used as an alternative to reference areas to measure revegetation success. The existing regulation remains in effect.

JUSTIFICATION FOR IMMEDIATE EFFECTIVE DATE OF SUSPENSION. Pending the outcome of the upcoming rulemakings, certain of the rules must be suspended immediately so as not to prejudice the interests of the plaintiffs in the lawsuit. In addition, maintaining regulations in effect which OSM has determined should be proposed for amendment would be unfair to the States which have submitted or are preparing State program applications for filing by March 3, 1980. As these regulations have no direct impact upon existing or new coal mining operations at this time, their temporary suspension will have little adverse affect upon achieving the Act's purposes pending completion of the rulemaking process.

Dated: December 21, 1979.

Joan M. Davenport,

Assistant Secretary, Energy and Minerals.

In consideration of the foregoing the following regulations are suspended:

1. *30 CFR 783.14(a)(1).* The regulation is suspended insofar as it requires a geologic description of the strata down to and including the strata immediately below any coal seam for areas to be affected only by "surface operations and facilities," where no removal of overburden down to the level of the coal seam will occur. For purposes of this suspension test borings and core samplings do not constitute removal of the overburden down to the coal seam. However, geologic descriptions will continue to be required for areas where overburden is being removed to the level of the coal seam and for certain specified "surface operations and facilities" where required by other regulatory requirements. See 30 CFR 783.25, 784.16(e) and 784.24(b)

Authority: 30 U.S.C. 515(b), 516, and 510.

2. *30 CFR 785.17(a).* The prime farmland grandfather clause is suspended. The Secretary will rely on Section 510(d)(2), SMCRA, to interpret this exemption for the purposes of the permanent program pending the outcome of further rulemaking. The Secretary's grandfather regulation under the initial program (30 CFR 716.7(a)(2)) remain in effect.

Authority: 30 U.S.C. 510(d)(2).

3. *30 CFR 785.17(b)(3) and 823.14(c).* These regulations are suspended insofar as they establish the "moist bulk density" standard for prime farmland soil compaction. Until a standard for soil compaction is proposed and adopted, the Office will implement the permanent program prime farmland standards by requiring that prime farmland permit applications demonstrate and operators mine so that excessive compaction is avoided in replacement of the soil, under Section 508(a)(4)–(5), 510(d)(1) and 515(b)(7) SMCRA. Avoiding excessive compaction is critical to the successful reclamation of prime farmland. See 44 FR 15086.

Authority: 30 U.S.C. 510 (b) and (d), 515(b)(7).

4. *30 CFR 816.83(a) and 817.83(a).* These regulations are suspended to the extent that they would preclude an exemption from the underdrain requirement for coal processing waste banks where an operator demonstrated that an alternative to the subdrainage system required in this regulation would ensure structural integrity of the wastebank and protection of ground or surface water quality.

Authority: 30 U.S.C. 515(b)(13), 516(b)(5).

5. *30 CFR 817.52(a)(1).* The following language is suspended: "on the recharge capacity of reclaimed lands and . . ."

As stated in the preamble to the proposed rules, underground mining should not affect the structural integrity of water bearing formations and thus no special precautions are necessary to protect recharge capacity. (43 FR 41780, September 18, 1978). For this reason the Secretary determined that a performance standard equivalent to 30 CFR 816.51 was unnecessary. With no performance standard concerning recharge capacity for underground mines in the regulations, a monitoring requirement becomes unnecessary.

Authority: 30 U.S.C. 515(b)(10) and 516(b)(9).

[FR Doc. 79-39799 Filed 12-28-79; 8:45 am]
BILLING CODE 4310-05-M

DEPARTMENT OF THE INTERIOR

Office of Surface Mining Reclamation and Enforcement

30 CFR Parts 715, 717, 816, and 817

Surface Coal Mining and Reclamation Operations Interim and Permanent Regulatory Programs Sediment Control Performance Standards

AGENCY: Office of Surface Mining Reclamation and Enforcement (OSM), U.S. Department of the Interior.

ACTION: Notice of intent to commence rulemaking.

SUMMARY: The Office of Surface Mining Reclamation and Enforcement issues a notice of intent to commence rulemaking to establish effluent limitations for total suspended solids discharges from surface coal mining and reclamation operations during rainfall events and to establish revised sedimentation pond design criteria. OSM has granted, in part, a petition to amend portions of 30 CFR Chapter VII, Subchapter K, Sediment Control Performance Standards for Surface Coal Mining and Reclamation Operations, and seeks public comment on what amendments, if any, can be made to the Sections of the regulations that have been suspended pursuant to the notice in this issue of the Federal Register.

DATES: Comments must be received by January 30, 1980, at the office listed below under "Address," by no later than 5:00 p.m.

Representatives of OSM will be available to meet with interested persons upon request between December 31, 1979 and January 30, 1980.

ADDRESS: Written comments must be mailed or hand-delivered to Office of Surface Mining, U.S. Department of the Interior, Room 135, South Building, 1951 Constitution Avenue NW., Washington, D.C. 20240.

Summaries of meetings with representatives of OSM will be prepared and made available for public review in Room 135 of the Interior South Building. Comments received will also be available for inspection at this address.

FOR FURTHER INFORMATION CONTACT: Jose R. del Rio, Civil Engineer, Division of Technical Services, Office of Surface Mining, U.S. Department of the Interior, South Building, 1951 Constitution Avenue NW., Washington, D.C. 20240; (202) 343-4022.

SUPPLEMENTARY INFORMATION: A petition of September 21, 1979, to amend OSM's sediment control performance standards regulations was submitted to OSM by the Joint National Coal Association/American Mining Congress (NCA/AMC) Committee on Surface Mining Regulations. The petition was published in the Federal Register (44 FR 60226-60228) on October 8, 1979, for public consideration and comment, with the request that comments specifically address three issues:

1. Whether the EPA and OSM effluent limits for total suspended solids should be revised, and, if so, what alternatives should be considered.

2. Whether OSM's design criteria for sediment ponds should be revised and, if so, what alternatives should be considered.

3. Whether there are relevant differences in the requirements of the Clean Water Act and Surface Mining Control and Reclamation Act that justify the establishment of different regulations for sediment control between EPA and OSM.

As a result of the comments received, and testimony presented at a public hearing on October 30, 1979, OSM has decided to grant the petition, in part, by suspending the permanent program TSS effluent limit rainfall exemption (30 CFR 816.42(b); 817.42(b)), and certain sediment pond design criteria (30 CFR 816.46(b)-(d), (f), 817.42(b)-(d), (f)). Corresponding provisions of the OSM initial regulatory program are also being suspended or withdrawn. *See* 30 CFR 715.17(a)(1), (e), 717.17(a)(1), (e). As a result of this action, amendments of the affected regulations will be considered to set effluent limitations during rainfall events and to further define minimum size and other criteria for sedimentation ponds. The following portions of the initial and permanent regulatory programs may be revised as a result of the rulemaking process being initiated:

Part 715—General Performance Standards (Initial Regulatory Program)

§ 715.17(a) Water quality standards and effluent limitations.

§ 715.17(e) Sediment control measures. (Note: Section 715.17(e) was revised on May 25, 1979, 44 FR 30631-30632, pursuant to a decision by the D.C. District Court *In re: Surface Mining Regulation Litigation, 452 F. Supp. 321 (D.D.C. 1978)*. These revised rules were to become effective upon approval by the Court. Approval has not been received and, thus, this Section is not now in effect.)

Part 717—Underground Mining General Performance Standards (Initial Regulatory Program)

§ 717.17(a) Water quality standards and effluent limitations.

§ 717.17(e) Sediment control measures. (This paragraph is also not in effect for the same reason as § 714.17(e).)

Part 816—Permanent Program Performance Standards—Surface Mining Activities

§ 816.42 Hydrologic balance: Water quality standards and effluent limitations.

§ 816.46 Hydrologic balance: Sedimentation ponds.

Part 817—Permanent Program Performance Standards—Underground Mining Activities

§ 817.42 Hydrologic balance: Water quality standards and effluent limitations.

§ 817.46 Hydrologic balance: Sedimentation ponds. OSM does not intend to modify the sedimentation and pond design criteria which relate to the safety of the structure in §§ 715.17(a), 715.17(a)(2), 715.17(b)-(f), 715.17(e)(1), 715.17(c)(5)-(e)(7), 715.17(e)(9)-(e)(22), 717.17(a), 717.17(a)(2), 717.17(b)-(f), 717.17(e)(1), 717.17(e)(5)-(e)(7), 717.17(e)(9)-(e)(22), 816.42(a), 816.42(c), 816.46(a), 816.46(c)-(g), 816.46(i)-(u), or 817.42(a), 817.42(c), 817.46(a), 817.46(c)-(g), and 817.46(i)-(u). OSM is obligated by the Surface Mining Control and Reclamation Act to assure that structures and facilities used in conjunction with surface coal mining and reclamation operations do not create a danger to the public health and safety. Neither comments received during the review of the petition nor other information presented to OSM warrant modification of these criteria.

Alternatives.—Some of the alternatives that will be considered are as follows:

1. OSM would re-adopt its present regulations, including the rainfall exemption under §§ 715.17(a)(1), 717.17(a)(1), 816.42(b), 817.42(b) and the sedimentation pond design criteria under §§ 715.17(e), 717.17(e), 816.46, and 817.46.

2. OSM would re-adopt a modified rainfall exemption under §§ 715.17(a)(1), 717.17(a)(1), 816.42(b), and 817.42(b), either expanding or contracting the rainfall frequency-level for award of an exemption, but would re-adopt §§ 715.17(e), 717.17(e), 816.46, and 817.46.

3. Sections 715.17(c)(1), 717.17(c)(1), 816.42(b), and 817.42(b) (rainfall exemption) would be modified to reflect

the conclusions by Skelly and Loy. The subsections of §§ 715.17(e), 717.17(e), 816.46, and 817.46 (sedimentation pond standards) dealing with pond size and sediment trapping efficiency may be considered for change consistent with those conclusions.

4. Sections 715.17(a)(1), 717.17(a)(1), 816.42(b), and 817.42(b) would be revised to exempt any discharge from meeting the discharge limits for TSS during any precipitation event if the facility is designed, constructed, and maintained according to OSM specifications. Under §§ 715.17(e), 717.17(e), 816.46, and 817.46, all design standards having to do with the size of the ponds would be considered for change for steep slope mining only.

5. Sections 715.17(a)(1), 717.17(a)(1), 816.42(b), and 817.42(b) would be retained as they existed prior to the recent suspension/withdrawal. All sections of §§ 715.17(e), 717.17(e), 816.46, and 817.46 dealing with the size of the pond and the efficiency of the structure would be deleted. The requirement to install a pond would remain, but sizing to meet effluent limitations would be left to the operator and/or the regulatory authority.

6. OSM would retain all Sections of the regulations on sedimentation ponds as they existed prior to the recent suspension/withdrawal, except for §§ 715.17(a)(1), 717.17(a)(1), 816.42(b), and 817.42(b). These sections would be deleted and replaced by new regulations incorporating rainfall-level TSS effluent limitations promulgated by EPA under 40 CFR 434.22, 434.25, 434.32, 434.35, 434.42, and 434.45.

OSM requests that commenters specifically address these alternatives and any others that they may wish to propose. The following factors, as well as others, will be considered by OSM in determining minimum pond size requirements which may be proposed:

1. Detention time calculations.
2. Sediment yield, especially during rainfall, and associated environmental harm.
3. Pond design criteria to avoid short circuiting.
4. Minimum flow criteria for a 10-year 24-hour precipitation event.
5. Type and design of dewatering devices.
6. Advantages and disadvantages of a wet versus a dry pond.
7. Regional and/or topographic constraints and differences.

After considering comments submitted and review of other pertinent data, OSM intends to publish proposed amendments to Subchapter K in the Federal Register about March 1, 1980. A period for public comment will follow that publication. AVAILABILITY OF COPIES: Copies of 30 CFR Subchapter K and the NCA/AMC petition and additional information on the sedimentation pond regulations are available and may be obtained at the following offices:

OSM Headquarters, U.S. Department of the Interior, South Building, Room 135, 1951 Constitution Avenue, NW., Washington, D.C., 20240; (202) 343-4728.

OSM Region I, First Floor, Thomas Hill Building, 950 Kanawha Boulevard East, Charleston, W. Va., 25301; (304) 342-8125.

OSM Region II, 530 Gay Street SW., Suite 500, Knoxville, Tenn. 37901; (615) 637-8060.

OSM Region III, Federal Building and U.S. Courthouse, 46 East Ohio Street, Indianapolis, Ind. 46204; (317) 269-2609.

OSM Region IV, 818 Grant Avenue, Scarritt Building, 5th Floor, Kansas City, Mo. 64106; (913) 753-2193.

OSM Region V, Brooks Towers, 1020 15th Street, Denver, Colo., 80202; (303) 837-5511.

Dated: December 21, 1979

Joan Davenport,

Assistant Secretary, Energy and Minerals.

[FR Doc. 79-39800 Filed 12-28-79; 8:45 am]

BILLING CODE 4310-05-M

DEPARTMENT OF THE INTERIOR

Office of Surface Mining Reclamation and Enforcement

Amendment to Notice of Public Hearing and Public Comment Period on the Wyoming Permanent Regulatory Program

AGENCY: Office of Surface Mining Reclamation and Enforcement (OSM), U.S. Department of the Interior.

ACTION: Amendment to Notice of Hearing and Comment Period for Initial Decision on Permanent Program Submission.

SUMMARY: OSM is amending its procedures for the public comment period on the proposed Wyoming regulatory program announced on December 11, 1979 (44 FR No. 239, pages 71798–9). That announcement did not provide the thirty-day notice of hearing required in 30 CFR Part 732.12 (44 FR 15326–15327, March 13, 1979). Consequently, OSM has determined that it will extend the public comment period until January 11, 1980, and if any party asks in writing prior to January 7, 1980, or verbally at the public hearing on January 7, 1980, the Regional Director will afford the public an additional public hearing at a time and place to be announced.

ADDRESSES: Written objections should be sent to Mr. Donald A. Crane, Regional Director, Office of Surface Mining, Department of the Interior, Brooks Towers, Room 5010, 1020—15th Street, Denver, Colorado 80202, or may be hand delivered to the Regional Director.

The public hearing will be held at the Hitching Post Motel, located at Interstate 25 in Cheyenne, Wyoming, beginning at 9:00 a.m.

SUPPLEMENTARY INFORMATION: The notice of public hearing and comment period on the proposed Wyoming regulatory program was not published more than thirty days in advance of the hearing as required by regulation. Publication occurred on December 11, 1979 (44 FR 71798–9) for the hearing to be held on January 7, 1980. As a consequence, the public may not be afforded sufficient time to provide comments. OSM proposes to remedy this insufficiency by extending the public comment period until January 11, 1980, and by holding an additional public hearing if requested to do so. This announcement is made in keeping with OSM's commitment to public participation as a vital component in fulfilling the purposes of the Surface Mining Control and Reclamation Act of 1977.

Dated: December 21, 1979.

Carl C. Close

Assistant Director, State and Federal Programs, Office of Surface Mining Reclamation and Enforcement.

[FR Doc. 79-39801 Filed 12-28-79; 8:45 am]

BILLING CODE 4310-05-M

federal register

Monday
December 31, 1979

Part V

Federal Reserve System

Privacy Act of 1974; Systems of Records; Annual Publication

FEDERAL RESERVE SYSTEM

Privacy Act of 1974

Systems of Records—Annual Publication

This document fulfills the requirements of the Privacy Act of 1974 (5 U.S.C. § 552a(e)(4)) for federal agencies to publish notice annually of systems of records they maintain. A complete compilation of systems of records maintained by the Board of Governors of the Federal Reserve System was published on September 22, 1977 (42 FR 48142) and a notice of incorporation by reference of the 1977 systems of records, which had continued in effect unchanged, was published on September 14, 1978. (43 FR 41164).

One new system of records has been added since that time: BGFRS-18, FRB—Changes in Bank Control Records. Notice of this new system of records was published on February 8, 1979 (44 FR 8017).

This document includes a complete publication of notices published on September 22, 1977, September 14, 1978 and February 8, 1979. Only minor technical changes have been made, reflecting changes in equipment used to store records or in system managers' titles or addresses.

For further information, contact Mary Ellen A. Brown, Senior Counsel, Legal Division, Board of Governors of the Federal Reserve System, Constitution Avenue at 20th Street, N.W., Washington, D.C. 20530; (202) 452-3608.

Board of Governors of the Federal Reserve System, December 20, 1979.

Theodore E. Allison,
Secretary of the Board.

TABLE OF CONTENTS

Recruiting and Placement Records.
Personnel Background Investigation Reports.
Medical Records.
General Personnel Records.
EEO Discrimination Complaint File.
Adverse Information and Action, Disciplinary, Outside Business Activity and Financial Responsibility Records.
Payroll.
Leave Records.
Consultant File.
General File on Board Members.
Official General Files.
Biographical File of Federal Reserve Personnel.
General File of Examiners and Assistant Examiners at Federal Reserve Banks.
General File of Federal Reserve Bank and Branch Directors.
General Files of Federal Reserve Agents, Alternates and Representatives at Federal Reserve Banks.
Regulation G Reports.
Municipal Securities Principal and Municipal Securities Representative Records.
Changes in Bank Control Records.

BGFRS—1

System name: FRB—Recruiting and Placement Records

System location:

Board of Governors
Federal Reserve System
20th and Constitution, N.W.
Washington, D.C. 20551

Categories of individuals covered by the system: Persons who have applied for employment with or are employed by the Federal Reserve Board.

Categories of records in the system: These records may contain information relating to the education, training, employment history and earnings, appraisal of past performance, convictions for offenses against the law; results of tests, appraisal of potential, honors, awards of fellowships; military service; veteran status, school transcripts, work samples; birth date; social security number; shipping authorizations; travel vouchers, offer letters and correspondence, reference checks, and home address of persons who have applied for Board employment or are employed by the Federal Reserve Board.

Authority for maintenance of the system: Section 11 of the Federal Reserve Act (12 U.S.C. Sec. 221 et seq.).

Routine uses of records maintained in the system, including categories of users and the purposes of such uses: Information in these records may be used:

a. To refer applicants for purposes of consideration for placement in positions for which an applicant has applied and is qualified. This includes various government organizations.

b. To refer current Board employees for consideration for reassignment and promotion within the Board.

c. As a data source for management information for production of summary descriptive statistics and analytical studies in support of the function for which the records are collected and maintained, or for related personnel management functions or manpower studies; may also be utilized to respond to general requests for statistical information (without personal identification of individuals) under the Freedom of Information Act or to locate specific individuals for personnel research of other personnel management functions.

d. To refer, where there is an indication of a violation or potential violation of law, whether civil, criminal or regulatory in nature, to the appropriate agency, whether federal, state or local, charged with the responsibility of investigating or prosecuting such violation or with enforcing or implementing the statute, or rule, regulation or order issued pursuant thereto.

e. To request information from a Federal, state or local agency maintaining civil, criminal, or other relevant enforcement or other pertinent information, such as licenses, if necessary to obtain relevant information to an agency decision concerning the hiring or retention of an employee, the issuance of a security clearance, the letting of a contract, or the issuance of a license, grant or other benefit.

f. To provide information or disclose to a Federal Agency, or any other employer or prospective employer in response to its request, in connection with the hiring or retention of an employee, the letting of a contract, or issuance of a license, grant or other benefit by the requesting agency to the extent that the information is relevant and necessary to the requesting agency's decision on that matter.

Policies and practices for storing, retrieving, accessing, retaining, and disposing of records in the system:

Storage: Records are maintained on magnetic tapes, punched cards, microfilm, cards, lists, forms, and in folders.

Retrievability: Records are indexed by name, combination of birth date, social security account number, and applicable identification number.

Safeguards: Access to and use of these records are limited to those persons whose official duties require such access.

Retention and disposal:

a. Files of eligibles Retained for a minimum of one year after date of determination that no suitable position exists currently.

b. Index cards. Destroyed when no longer needed.

c. Cancelled and ineligible applications. Same as "a" above.

d. Inquiries and replies regarding availability for appointment.

System manager(s) and address:

Director of Personnel
Board of Governors
Federal Reserve System
20th and Constitution, N.W.
Washington, D.C. 20551

Notification procedure: Individuals should provide name, date of birth, Social Security Number, identification number (if known), approximate date of record, and type of position with which concerned to the System Manager, address above.

Record access procedures: Individuals should provide name, date of birth, Social Security Number, identification number (if known), approximate date of record, and type of position with which concerned to the System Manager, address above.

Record source categories: Information in this system of records either comes from the individual to whom it applies or is derived from information he or she supplies, except reports from medical personnel on physical qualifications; and statements supplied by references.

Systems exempted from certain provisions of the act: Pursuant to subsections (k)(2) and (k)(5) of the Privacy Act and the Board's regulation relating thereto (12 CFR 261a), certain portions of this system of records may be exempted from certain provisions of the Act where: (1) such portions represent investigatory material compiled for law enforcement purposes, or (2) such portions represent investigatory material compiled solely for the purpose of determining suitability, eligibility, or qualifications for Board employment to the extent that disclosure of such portions would reveal the identity of a source who furnished information under a promise of confidentiality.

BGFRS—2

System name: FRB Personnel Background Investigation Reports

System location:

Board of Governors

Federal Reserve System
20th and Constitution, N.W.
Washington, D.C. 20551

Categories of individuals covered by the system: Current and former applicants for employment by the Board of Governors; Federal Reserve System employees considered for access to classified information or restricted areas; and/or security determinations as contractors, employees of contractors, experts, instructors, and consultants to the Board. Individuals who are neither applicants nor employees of the Board but are or were involved in Board programs under a cooperative assignment or similar agreement; individuals who are neither applicants nor employees of the Board but are or were involved in matters related to the operation of the Board.

Categories of records in the system: These records may contain investigative information regarding an individual's character, financial responsibility, conduct, behavior; arrests and convictions for any violations against the law; reports of interviews with former supervisors, co-workers, associates, educators, etc.; reports about the qualifications of an individual for a specific position; reports of inquiries with law enforcement agencies; former employers; educational institutions attended; and other information developed from the above.

Authority for maintenance of the system: Section 11 of the Federal Reserve Act (12 U.S.C. Sec. 221 et seq.).

Routine uses of records maintained in the system, including categories of users and the purposes of such uses: The contents of these records may be disclosed to and used as follows:

a. To assist in determining the suitability for access to classified information.

b. To designated officers and employees of other agencies and departments of the Federal Government, and the District of Columbia Government, having an interest in the individual for employment purposes, in connection with performance of a service to the Federal Government, under a contract or other agreement, including a security clearance or access determination, and a need to evaluate qualifications, suitability, and loyalty to the United States Government.

c. To the intelligence agencies of the Department of Defense, National Security Agency, Central Intelligence Agency, and the Federal Bureau of Investigation for use in intelligence activities.

d. To any source from which information is requested by the Board in the course of an investigation, to the extent necessary to identify the individual, inform the source of the nature and purpose of the investigation and to identify the type of information requested.

e. In the event of an indication of any violation or potential violation of the law, whether civil, criminal, or regulatory in nature, and whether arising by statute or by regulation, rule or order issued pursuant thereto, the relevant records in the system of records may be referred, as a routine use, to the appropriate agency, whether Federal, State, or local charged with the responsibility of investigating or prosecuting such violation or charged with enforcing or implementing the statute, or rule, regulation or order issued pursuant thereto; such referral shall also include, and be deemed to authorize any and all appropriate and necessary uses of such records in a court of law and before an administrative board or hearing.

f. As a data source for management information for production of descriptive statistics and analytical studies in support of the function for which the records are collected and maintained, or for related personnel management functions or manpower studies; may also be utilized to respond to general requests for statistical information (without personal identification of individuals) under the Freedom of Information Act or to locate specific individuals for personnel research or other personnel management functions.

Policies and practices for storing, retrieving, accessing, retaining, and disposing of records in the system:

Storage: Files are maintained in folders and index cards in steel file cabinets with manipulation proof combination lock.

Retrievability: Records are indexed by name in alphabetical order.

Safeguards: Access to and use of these records are limited to those persons whose official duties require access and who have appropriate security clearance.

Retention and disposal: The indexing cards are retained indefinitely, while the reports of investigation are returned to the originating agency after separation of employment.

System manager(s) and address:

Chief of Security
Division of Support Services
Board of Governors
Federal Reserve System
20th and Constitution, N.W.
Washington, D.C. 20551

Notification procedure: An individual may inquire as to whether or not the system contains a record pertaining to him or to her by addressing a written request to:

Director of Personnel
Board of Governors
Federal Reserve System
20th and Constitution, N.W.
Washington, D.C. 20551

The request should include the full name and date and place of birth of the individual, and any available information regarding the type of record involved, and the category of individual under which the inquirer feels he or she fits.

Record access procedures: In response to a written request by an individual to determine whether or not the system contains a record pertaining to him or to her, the Director will set forth the procedure for gaining access to the record. If the individual desires to contest the contents of a record, he or she may do so by writing to the:

Director of Personnel
Board of Governors
Federal Reserve System
20th and Constitution, N.W.
Washington, D.C. 20551

Record source categories: Information contained in the system is obtained from the following:

1. Applications and other personnel and security forms furnished by the individual.
2. Investigative material furnished by other Federal agencies. Notices of personnel actions furnished by other Federal agencies.
3. By personal investigation or written inquiry from sources such as:

Employers
Schools
References
Neighbors
Associates
Police Departments
Courts
Credit Bureau
Medical Records
Probation Officials
Prison Officials

4. Newspapers, magazines, periodicals, and other publications.
5. Published hearings of Congressional Committees.

Systems exempted from certain provisions of the act: Pursuant to subsections (k)(2) and (k)(5) of the Privacy Act and the Board's regulation relating thereto (12 CFR 261a), certain portions of this system of records may be exempted from certain provisions of the Act where: (1) such portions represent investigatory material compiled for law enforcement purposes, or (2) such portions represent investigatory material compiled solely for the purpose of determining suitability, eligibility, or qualifications for Board employment to the extent that disclosure of such portions would reveal the identity of a source who furnished information under a promise of confidentiality.

BGFRS—3

System name: FRB—Medical Records

System location:

Board of Governors
Federal Reserve System
20th and Constitution, N.W.
Washington, D.C. 20551

Categories of individuals covered by the system: 1. Applicants who have been medically examined for Board employment.

2. Applicants for disability retirement under the Civil Service Retirement Law or Federal Reserve System Retirement Plan.
3. Current and former Federal Reserve Board employees.

Categories of records in the system: 1. Information relating to an individual's medical qualifications to hold a position with the Board.

2. Medical information relating to an individual's capability (physical and mental) to satisfactorily perform the duties of the position he or she holds or held.
3. Information relating to an employee's participation in an occupational health services program.
4. Information relating to pre-employment or periodic medical examinations to assure that the incumbent is qualified (physically and mentally) to satisfactorily perform the duties of the position.
5. Information attesting to an annuitant's state of health as required for "insurable interest" survivor annuity elections.
6. Information relating to handicaps

7. Information relating to employee participation in the Federal Civilian Employee Alcoholism and Drug Abuse Programs.

Authority for maintenance of the system: Section 11 of the Federal Reserve Act (12 U.S.C. Sec. 221 et seq.).

Routine uses of records maintained in the system, including categories of users and the purposes of such uses: 1. Information in these records is used to:

a. determine veteran disability status
b. support applications for Disability Retirement
c. support "insurable interest" survivor annuity elections
d. determine suitability for employment or continued employment
e. assist in medical counseling

2. Information in these records may be provided to officials of other Federal agencies responsible for Federal benefit programs administered by:

a. Office of Workmen Compensation Programs
b. Retired Military Pay Centers
c. Veterans Administration
d. Social Security Administration
e. Specific private contractors engaged in providing benefits under Federal contracts.
f. Civil Service Commission.

3. Information in these records is used:

a. to refer, where there is an indication of a violation or potential violation of law, whether civil, criminal or regulatory in nature, to the appropriate agency, whether Federal, state, or local charged with the responsibility of investigating or prosecuting such violation or charged with enforcing or implementing the statute or rule, regulation or order issued pursuant thereto.

b. to request information from a Federal, state or local agency maintaining civil, criminal or other relevant enforcement or other pertinent information, such as a license, if necessary to obtain relevant information to the Board's decision concerning the hiring or retention of an employee, the issuance of a security clearance, the letting of a contract or the issuance of a grant or other benefit.

c. to provide information or disclose to a Federal agency, in response to its request, in connection with the hiring or retention of an employee, the letting of a contract or issuance of a license, grant or other benefit by the requesting agency to the extent that the information is relevant and necessary to the requesting agency's decision on the matter.

d. as a data source for management information for production of descriptive statistics and analytical studies in support of the function for which the records are collected and maintained, or for related personnel management functions or manpower studies; may also be utilized to respond to general requests for information (without personal identification of individuals) under the Freedom of Information Act or to locate specific individuals for personnel research or other personnel management functions.

Policies and practices for storing, retrieving, accessing, retaining, and disposing of records in the system:

Storage: Records are in folders.

Retrievability: Records are indexed by name, social security number, identification number, date of birth and/or claim number.

Safeguards: Access to and use of these records are limited to those persons whose official duties require such access. Records are stored in lockable metal containers.

Retention and disposal:

a. Medical certificates and other medical records of examination used to determine an employee's fitness for a job 6 years after separation
b. Miscellaneous medical records, correspondence dispensary records and similar papers, 6 months after separation
c. Applicant's medical records, 6 years after separation
d. Disability retirement medical files, 6 years after separation

System manager(s) and address:

Director of Personnel
Board of Governors
Federal Reserve System
20th and Constitution, N.W.
Washington, D.C. 20551

Notification procedure: Individuals requesting information about this system of records should provide their full name, date of birth, social security number, name of office or division in which currently or formerly employed, and annuity account number, if any has been assigned, to the System Manager, address above.

Record access procedures: Individuals requesting information about this system of records should provide their full name, date of birth, social security number, name of office or division in which currently or formerly employed, and annuity account number, if any has been assigned, to the System Manager, address above.

Record source categories:

1. The individual to whom the record pertains.
2. Personal physicians.
3. Medical institutions.
4. Official records of other Federal agencies.
5. Federal Reserve Board Official Personnel Records.
6. Federal Reserve System Personnel Management Records Systems.

Systems exempted from certain provisions of the act: None; however, see special procedures provided at 12 CFR 261a.6.

BGFRS—4

System name: FRB—General Personnel Records

System location:

Board of Governors
Federal Reserve System
20th and Constitution, N.W.
Washington, D.C. 20551

Categories of individuals covered by the system: Current and former employees of and consultants to the Federal Reserve Board and the surviving spouses, and children of former Board employees, if any.

Categories of records in the system: This system of records consists of a variety of documents relating to personnel actions of the Board and its determinations made about an individual for, and during the course of his employment by the Board. These records may contain information about employees and former employees relating to employment, placement, personnel actions, performance considerations and evaluations; training and development activities and plans, background investigations; reference checks; salary history and other personnel matters. It also includes minority group designator; records relating to benefits and designation of beneficiary; emergency contact, documentation supporting personnel actions or decisions made about an individual; awards; employee parking and other information relating to the status of the individual either while considered for employment or while employed by the Board.

Authority for maintenance of the system: Sections 10 and 11 of the Federal Reserve Act (12 U.S.C. Sec. 221 et seq.)

Routine uses of records maintained in the system, including categories of users and the purposes of such uses: Information in these records is used:

a. For purposes of review in connection with appointments, transfers, promotions, reassignments, training and development needs, adverse actions, disciplinary actions, and determination of qualifications of an individual, and in assisting the individual in locating other employment.

b. For purposes of making a decision when a Board employee or former Board employee is questioning the validity of a specific document in the individual's record.

c. By the courts to render a decision.

d. To provide information to a prospective employer of a current or former Board employee.

e. To provide data for the automated Personnel records.

f. To provide information to a Federal agency, or any other employer or prospective employer, in response to its request in connection with the hiring or retention of an employee, the letting of a contract, or issuance of a license, grant, or other benefit by the requesting agency, to the extent that the information is relevant and necessary to the requesting agency's decision on the matter.

g. To request information from a Federal, state or local agency maintaining civil, criminal, or other relevant enforcement or other pertinent information, such as licenses, if necessary to obtain relevant information or other pertinent information to a Board decision concerning the hiring or retention of an employee, the issuance of a security clearance, the letting of contract, or the issuance of a grant or other benefit.

h. To refer, where there is an indication of a violation or potential violation of law, whether civil, criminal or regulatory in nature, to the appropriate agency, whether Federal, state, or local, charged with the responsibility of investigating or prosecuting such violation or charged with enforcing or implementing the statute, or rule, regulation, or order issued pursuant thereto.

i. As a data source of management information for production of statistical and analytical studies and reports in support of the function for which the records are collected and maintained, or for related personnel management functions or manpower studies; may also be utilized to respond to general requests for statistical information (without personal identification of individuals) under the Freedom of

Information Act or to locate specific individuals for personnel research or other personnel management functions.

j. Determine eligibility for coverage, benefits due, and payment of benefits under the various benefits programs available to the Board and its staff.

k. Transfer information necessary to support a claim for benefits under the various benefit programs in operation at the Federal Reserve Board.

Policies and practices for storing, retrieving, accessing, retaining, and disposing of records in the system:

Storage: Records are maintained in file folders, magnetic tape, disc, punched cards, index cards and microfilm.

Retrievability: Records are indexed by any combination of name, date of birth, Social Security Number, or identification number.

Safeguards: Records are located in lockable metal file cabinets or in metal file cabinets in secured rooms with access limited to those whose official duties require it.

Retention and disposal: The General Personnel Record is retained until five years after death or an individual achieves age 75 where he or she does not separate employment by retirement.

System manager(s) and address: For current and former Federal Reserve Board employees:

Director of Personnel
Board of Governors
Federal Reserve System
20th and Constitution, N.W.
Washington, D.C. 20551

Notification procedure: Inquiries, including name, date of birth, and Social Security Number should be addressed to the System Manager, address above.

Record access procedures: Current and former Federal Reserve Board employees who wish to gain access to or contest their records should contact the System Manager, address above. Former Board employees should direct such a request in writing, including their name, date of birth, and Social Security Number.

Record source categories: Information in this system of records comes from the individual to whom it applies or is derived from the information the individual supplied, except information provided by Board officials. Information is also obtained from the following sources for administration of the benefits portion of the system:

1. CSC Personnel Management Records System
2. Personnel records of other Government agencies
3. Personnel Records of Federal Reserve Banks

Systems exempted from certain provisions of the act: Pursuant to subsections (k)(2) and (k)(5) of the Privacy Act and the Board's regulation relating thereto (12 CFR 261a), certain portions of this system of records may be exempted from certain provisions of the Act where: (1) such portions represent investigatory material compiled for law enforcement purposes, or (2) such portions represent investigatory material compiled solely for the purpose of determining suitability, eligibility, or qualifications for Board employment to the extent that disclosure of such portions would reveal the identity of a source who furnished information under a promise of confidentiality.

BGFRS—5

System name: FRB—EEO Discrimination Complaint File

System location:

Board of Governors
Federal Reserve System
20th and Constitution, N.W.
Washington, D.C. 20551

Categories of individuals covered by the system: Applicants for Board employment, current and former Board employees, and annuitants who file a complaint of discrimination or appeal a determination made by an official of the Board relating to equal employment opportunities.

Categories of records in the system: This system of records contains information or documents relating to a complaint, the decision or determination made by the Board affecting an individual under the Board's EEO regulations and procedures. The records consist of the initial complaint or appeal letters or notices to the individual, record of hearings when conducted, materials placed into the record to support the decision or determination, affidavits or statements, testimonies of witnesses, investigative reports, instructions to the Board and/or individual about action to be taken to comply with decisions, and related correspondence, opinions and recommendations.

Authority for maintenance of the system: Section 11 of the Federal Reserve Act (12 U.S.C. Sec 221 et seq.).

Routine uses of records maintained in the system, including categories of users and the purposes of such uses: The information in the records may be used:

a. To respond to a request from a Member of Congress regarding the status of an appeal, complaint or grievance.

b. To provide information to the public on the decision of an appeal, complaint, or grievance required by the Freedom of Information Act.

c. To respond to a Court subpoena and or to refer to a District court in connection with a civil suit.

d. To adjudicate an appeal, complaint, or grievance.

e. As a data source for management information for production of summary descriptive statistics and analytical studies in support of the function for which the records are collected and maintained, or for related personnel management functions or manpower studies; may also be utilized to respond to general requests for statistical information (without personal identification of individuals) under the Freedom of Information Act or to locate specific individuals for personnel research or other personnel management functions.

f. To refer, where there is an indication of a violation or potential violation of law, whether civil, or regulatory in nature, to the appropriate agency, whether Federal, state, or local, charged with the responsibility of investigating or prosecuting such violation or charged with enforcing or implementing the statute, rule, regulation or order issued pursuant thereto.

g. To provide information or disclose to a Federal agency, in response to its request, in connection with the hiring or retention of an employee, the letting of a contract, or issuance of a license, grant, or other benefit by the requesting agency to the extent that the information is relevant and necessary to the requesting agency's decision on that matter.

Policies and practices for storing, retrieving, accessing, retaining, and disposing of records in the system:

Storage: These records are maintained in file folders, binders, and index cards.

Retrievability: These records are indexed by the names of the individuals on whom they are maintained.

Safeguards: Access to and use of these records are limited to those persons whose official duties require such access. Personnel screening is employed to prevent unauthorized disclosure.

Retention and disposal: The records are maintained indefinitely.

System manager(s) and address:

Director of Personnel
Board of Governors
Federal Reserve System
20th and Constitution, N.W.
Washington, D.C. 20551

Notification procedure: Individuals who have filed appeals or grievances are aware of that fact and have been provided a copy of the records. They may, however, contact the System Manager, address above. Individuals should provide their name, date of birth, and the approximate date of employment or application, and the kind of action taken by the Board when making inquiries about records.

Record access procedures: Individuals who have appealed or filed a grievance about a decision or determination made by the Board or about conditions existing in the Board already have been provided a copy of the records. However, to gain access or contest the records in this system, individuals should contact the System Manager, address above. Individuals should provide their name, date of birth, approximate date of employment or application, and the kind of action taken by the Board when requesting access to, or contest of records.

Record source categories:

a. Individual to whom the record pertains
b. Board employees
c. Affidavits or statements from employee
d. Testimonies of witnesses
e. Official document relating to the appeal, grievance, or complaints
f. Correspondence from specific organization or persons

Systems exempted from certain provisions of the act: Pursuant to subsection (k)(2) of the Privacy Act and the Board's regulations relating thereto (12 CFR 261a), certain portions of this system of records may be exempted from certain provisions of the Act where such portions represent investigatory material compiled for law enforcement purposes.

BGFRS—6

System name: FRB—Adverse Information and Action, Disciplinary, Outside Business Activity and Financial Responsibility Records.

System location:

Board of Governors
Federal Reserve System
20th and Constitution, N.W.
Washington, D.C. 20551

Categories of individuals covered by the system: Current and former Board employees, (including special employees) and annuitants who are involved in an Adverse Action; Board officials providing annual financial responsibility statements; employees who suffer a withholding of a Progress Step Increase; employees who file an Outside Business Activity application; and those employees who have creditors contacting the Board relative to credit problems.

Categories of records in the system: This system of records may contain information or documents relating to a determination made by the Board affecting an individual. The records consist of the letters or notices to the individual, record of hearings when conducted, materials placed into the record to support the decision or determination, affidavits or statements, testimonies of witnesses, investigative reports, and related correspondence, opinions and recommendations. Also, copies of Financial Responsibility Statements and Outside Business Interest applications filed by the employee; and letters from creditors.

Authority for maintenance of the system: Section 11 of the Federal Reserve Act (12 U.S.C. Sec. 221 et seq.).

Routine uses of records maintained in the system, including categories of users and the purposes of such uses: The information in the records may be used:

a. To respond to a request from a Member of Congress regarding the status of an appeal, complaint or grievance.
b. To provide information to the public on the decision of an appeal, complaint, or grievance required by the Freedom of Information Act.
c. To respond to a court subpoena and/or to refer to a District court in connection with a civil suit.
d. To adjudicate an appeal, complaint, or grievance.
e. As a data source for management information for production of descriptive statistics and analytical studies in support of the function for which the records are collected and maintained, or for related personnel management functions or manpower studies; may also be utilized to respond to general requests for statistical information (without personal identification of individuals) under the Freedom of Information Act or to locate specific individuals for personnel management functions.
f. To refer, where there is an indication of a violation or potential violation of law, whether civil, criminal or regulatory in nature, to the appropriate agency, whether Federal, state, or local, charged with the responsibility of investigating or prosecuting such violation or charged with enforcing or implementing the statute, rule, regulation or order issued pursuant thereto.
g. To request information from a Federal, state or local agency maintaining civil, criminal, or other relevant enforcement or other pertinent information, such as licenses, if necessary to obtain relevant information to a Board decision concerning the hiring or retention of an employee, the issuance of a security clearance, the letting of a contract, or the issuance of a grant or other benefit.
h. To provide information or disclose to a Federal agency, in response to its request, in connection with the hiring or retention of an employee, the letting of a contract, or issuance of a license, grant or other benefit by the requesting agency to the extent that the information is relevant and necessary to the requesting agency's decision on that matter.
i. To identify or determine conflict of interest situations or potential conflict of interest.
j. To advise an employee of potential problems.
k. To administer various aspects of established personnel management programs.

Storage: These records are maintained in file folders, binders, index cards, magnetic tape and disk.

Retrievability: These records are indexed by the names of the individuals on whom they are maintained.

Safeguards: Access to and use of these records are limited to those persons whose official duties require such access. Personnel screening is employed to prevent unauthorized disclosure.

Retention and disposal: The records are maintained indefinitely after cessation of employment unless deemed unnecessary, and thus destroyed.

System manager(s) and address:

Director of Personnel
Board of Governors
Federal Reserve System
20th and Constitution, N.W.
Washington, D.C. 20551

Notification procedure: Individuals should provide name, date of birth, Social Security Number, identification number (if known), approximate date of record, and type of situation with which concerned to the System Manager, address above.

Record access procedures: Individuals should provide name, date of birth, Social Security Number, identification number (if known), approximate date of record, and type of situation with which concerned to the System Manager, address above.

Record source categories:

a. Individual to whom the record pertains
b. Board officials
c. Affidavits or statements from employees
d. Testimonies of witnesses
e. Official documents relating to an action, appeal, grievance, or complaints.
f. Correspondence from specific organizations or persons.

Systems exempted from certain provisions of the act: None.

BGFRS—7

System name: FRB—Payroll

System location:

Board of Governors
Federal Reserve System
20th and Constitution, N.W.
Washington, D.C. 20551

Categories of individuals covered by the system: Past and present employees and members of the Board.

Categories of records in the system: Varied payroll records including payment vouchers, comprehensive listing of employees, requests for deductions, tax forms, W-2 forms, overtime requests, leave data, workmen's compensation data.

Authority for maintenance of the system: Section 11 of the Federal Reserve Act (12 U.S.C. Sec. 221 et seq.).

Routine uses of records maintained in the system, including categories of users and the purposes of such uses: Used in the preparation of Board payroll, as input to several management reports and, from time to time, input to other contributing programs and as input to Board studies, analyses, and reports.

Policies and practices for storing, retrieving, accessing, retaining, and disposing of records in the system:

Storage: On tape, disk, punched cards, index cards, folders and document files.

Retrievability: Filed by name, social security number, and employee number.

Safeguards: Access is restricted to authorized personnel only. Records are stored in cabinets and a safe. Access to computer records.

Retention and disposal: Various: minimum of one year from date of annual audit; maximum of indefinite.

System manager(s) and address:

Director of Personnel
Board of Governors
Federal Reserve System
20th and Constitution, N.W.
Washington, D.C. 20551

Notification procedure: Current and former employees who wish to gain access or contest their records should contact System Manager, address above. Individuals should provide name, date of birth, social security number, and identification number (if known).

Record access procedures: Current and former employees who wish to gain access or contest their records should contact System Manager, address above. Individuals should provide name, date of birth, social security number, identification number (if known).

Record source categories: Internal personnel forms, Federal, state, and local tax forms, employee authorizations and directive forms, insurance forms, leave and overtime reports, Federal and state garnishment forms.

Systems exempted from certain provisions of the act: None.

BGFRS—8

System name: FRB—Leave Records

System location:

Board of Governors
Federal Reserve System
20th and Constitution, N.W.
Washington, D.C. 20551

Categories of individuals covered by the system: Present employees, former employees for a period of three years following their separation from the Board.

Categories of records in the system: Contains timekeeper records, leave cards, payroll notifications, supporting memorandum, periodic leave statements, and creditable service documentation.

Authority for maintenance of the system: Section 11 of the Federal Reserve Act (12 U.S.C. sec 221 et seq.).

Routine uses of records maintained in the system, including categories of users and the purposes of such uses: Used as a data source for management information and payment of leave, for production of statistics and analytical studies in support of the function for which records are collected and maintained or for related personnel management functions and manpower studies.

Policies and practices for storing, retrieving, accessing, retaining, and disposing of records in the system:

Storage: Punched card, tape, disk, index card, folder, and print out.

Retrievability: Filed by date, but may be filed by name or identifying number.

Safeguards: Stored in locked metal file cabinets, other records stored in secured limited access computer facilities.

Retention and disposal: Detailed information destroyed after two years. Summary data is a part of permanent official personnel file.

System manager(s) and address:

Division of Personnel
Board of Governors
Federal Reserve System
20th and Constitution, N.W.
Washington, D.C. 20551

Notification procedure: Individuals wishing to know whether information about them is maintained in this system of records should address inquiries to the System Manager above. Former Board employees should direct such a request in writing, including their name, date of birth, and Social Security number.

Record access procedures: Individuals wishing to gain access or contest their records should contact the System Manager, address above. Former Board employees should direct such a request in writing, including their name, date of birth, and Social Security Number.

Record source categories: Records, files and forms of the Board, information provided by the employee and previous Federal Government employers.

Systems exempted from certain provisions of the act: None.

BGFRS—9

System name: FRB—Consultant File

System location:

Board of Governors
Federal Reserve System
20th and Constitution, N.W.
Washington, D.C. 20551

Categories of individuals covered by the system: Individuals providing consulting services to the Board in accordance with a formal agreement.

Categories of records in the system: Documents, letters, memorandum of understanding relating to agreement, rates of pay, payment, records, vouchers, invoices, and selection; negotiation, implementation, scope and performance of work. Additional information may be found on reemployed annuitants in the FRB-General Personnel Records.

Authority for maintenance of the system: Section 11 of the Federal Reserve Act (12 U.S.C. Sec 221 et seq.).

Routine uses of records maintained in the system, including categories of users and the purposes of such uses: Routine uses include, but are not restricted to, selection, monitoring, evaluation and control, audit and analysis, routine management activity, and statistical use without individual indentification; verification and confirmation; and referral when used as a basis for prospective employment by other than the Board; to provide information or disclose to a Federal agency, or any other employer or prospective employer, in response to its request, in connection with the hiring or retention of an employee, the letting of a contract, or issuance of a license, grant, or other benefit by the requesting agency, to the extent that the information is relevant and necessary to the requesting agency's decision on the matter.

Policies and practices for storing, retrieving, accessing, retaining, and disposing of records in the system:

Storage: Folder, punched card, tape, disk and index card.

Retrievability: File by name, and cross index by voucher number and date, or identifying number.

Safeguards: Stored in secured area.

Retention and disposal: Indefinite.

System manager(s) and address:

Director of Personnel
Board of Governors
Federal Reserve System
20th and Constitution, N.W.
Washington, D.C. 20551

Notification procedure: Individuals who have filed appeals or grievances are aware of that fact and have been provided a copy of the records. They may, however, contact the System Manager, address above. Individuals should provide their name, date of birth, and the approximate date of employment or application, and the kind of action taken by the Board when making inquiries about records.

Record access procedures: Individuals who have appealed or filed a grievance about a decision or determination made by the Board or about conditions existing in the Board already have been provided a copy of the records. However, to gain access or contest the records in this system, individuals should contact the System Manager, address above. Individuals should provide their name, date of birth, approximate date of employment or application, and the kind of action taken by the Board when requesting access to, or contest of records.

Record source categories: Information in this system of records is obtained from the individual to whom it applies or is derived from information supplied by the individual, except information provided by Board staff, and for reemployed annuitants where the inactive General Personnel File is activated.

Systems exempted from certain provisions of the act: Pursuant to subsections (k)(2) and (k)(5) of the Privacy Act and the Board's regulation relating thereto (12 CFR 261a), certain portions of this system of records may be exempted from certain provisions of the Act where: (1) such portions represent investigatory material compiled for law enforcement purposes, or (2) such portions represent investigatory material compiled solely for the purpose of determining suitability, eligibility, or qualifications for Board employment to the extent that disclosure of such portions would reveal the identity of a source who furnished information under a promise of confidentiality.

BGFRS—10

System name: FRB—General File on Board Members

System location:

Board of Governors
Federal Reserve System
20th and Constitution, N.W.
Washington, D.C. 20551

Categories of individuals covered by the system: Past and present members of the Board of Governors.

Categories of records in the system: Biographies of past and present members of the Board, oaths of office, and miscellaneous correspondence relating to such Governors.

Authority for maintenance of the system: Section 10 of the Federal Reserve Act (12 U.S.C. Sec. 221 et seq.).

Routine uses of records maintained in the system, including categories of users and the purposes of such uses: Used for background information to determine qualifications for appointment, reappointments, for compiling information for news releases and other publications, and for recording correspondence concerning the Governors.

Policies and practices for storing, retrieving, accessing, retaining, and disposing of records in the system:

Storage: Paper records.

Retrievability: Indexed by name.

Safeguards: Locked in Supreme power file. Access limited to Board staff on a restricted basis.

Retention and disposal: Indefinite.

System manager(s) and address:

Secretary of the Board
Board of Governors
Federal Reserve System
20th and Constitution, N.W.
Washington, D.C. 20551

Notification procedure: Same as System Manager, address above.

Record access procedures: Same as System Manager, address above.

Record source categories: Generated by individuals (12 CFR 261a) incoming correspondence and staff response thereto.

Systems exempted from certain provisions of the act: Pursuant to subsection (k)(5) of the Privacy Act and the Board's regulations relating thereto (12 CFR 261a), certain portions of this system of records may be exempted from certain provisions of the Act where such portions represent investigatory material compiled solely for the purpose of determining suitability, eligibility, or qualifications for Board employment to the extent that disclosure of such portions would reveal the identity of a source who furnished information under a promise of confidentiality.

BGFRS—11

System name: FRB—Official General Files

System location:

Board of Governors
Federal Reserve System
20th and Constitution, N.W.
Washington, D.C. 20551

Categories of individuals covered by the system: Correspondents with the Board and System Personnel.

Categories of records in the system: Incoming and outgoing correspondence concerning Board business. Records relating to System Personnel in official capacities such as instructors, consultants, and Board representatives to various committees, conferences, etc.

Authority for maintenance of the system: Sections 10 and 11 of the Federal Reserve Act (12 U.S.C. Sec. 221 et seq.).

Routine uses of records maintained in the system, including categories of users and the purposes of such uses: Used for reference purposes in preparing responses to inquiries from the public and used in recording official duties of System Personnel.

Policies and practices for storing, retrieving, accessing, retaining, and disposing of records in the system:

Storage: Paper records.

Retrievability: Indexed by name.

Safeguards: Locked in Supreme power file. Access limited to Board staff on a restricted basis.

Retention and disposal: Indefinite.

System manager(s) and address:

Secretary of the Board
Board of Governors
Federal Reserve System
20th and Constitution, N.W.
Washington, D.C. 20551

Notification procedure: System Manager, address above.

Record access procedures: System Manager, address above.

Record source categories: Generated by individuals incoming correspondence and staff response thereto.

Systems exempted from certain provisions of the act: Pursuant to subsection (k)(5) of the Privacy Act and the Board's regulations relating thereto (12 CFR 261a), certain portions of this system of records may be exempted from certain provisions of the Act where such portions represent investigatory material compiled solely for the purpose of determining suitability, eligibility, or qualifications for Board employment to the extent that disclosure of such portions would reveal the identity of a source who furnished information under a promise of confidentiality.

BGFRS—12

System name: FRB—Biographical File of Federal Reserve Personnel

System location:

Board of Governors
Federal Reserve System
20th and Constitution, N.W.
Washington, D.C. 20551

Categories of individuals covered by the system: Current and former Federal Reserve System officers, and their staff.

Categories of records in the system: This system consists of a variety of records relating to personnel actions and determinations made about an individual while employed in the Federal Reserve System. These records contain information about an individual relating to birth date; education; veteran status; tenure; handicap; past and present salaries, grades, and position titles; personnel actions, including but not limited to, appointment, reassignment, demotion, detail, promotion, transfer, and separation; photograph, awards; and other information relating to the status of the individual.

Authority for maintenance of the system: Sections 4, 11 and 22 of the Federal Reserve Act (12 U.S.C. Sec. 221 et seq.).

Routine uses of records maintained in the system, including categories of users and the purposes of such uses: Information in these records may be used:

a. By Federal Reserve System officials for purposes of review in connection with appointments, transfers, promotion, reassignments, adverse actions, disciplinary actions, and determination of qualifications of an individual.

b. By the Board of Governors for purposes of making a decision when a listed employee or former listed employee is questioning the validity of a specific document in the individual's record.

c. By the courts to render a decision when the Board has refused to release to current or former System employee a record under the Freedom of Information Act.

d. To publish name and title data for the Directory of officers of Federal Reserve Banks.

e. To provide reports to Congress, agencies, and the public on characteristics of the System work force.

f. To refer, where there is an indication of a violation or potential violation of law, whether civil, criminal, or regulatory in nature, to the appropriate agency, whether Federal, state, or local, charged with the responsibility of investigating or prosecuting such violation or charged with enforcing or implementing the statute, rule, regulation, or order issued pursuant thereto.

g. As a data source for management information for production of summary descriptive statistics and analytical studies in support of the function for which the records are collected and maintained, or for related personnel management functions or manpower studies; may also be utilized to respond to general requests for information (without personal identification of individuals) under the Freedom of Information Act or to locate specific individuals for personnel research or other personnel management functions.

Policies and practices for storing, retrieving, accessing, retaining, and disposing of records in the system:

Storage: Records are maintained in file folders, magnetic tape, punched cards and disk.

Retrievability: Records are indexed by combination of name or identification number.

Safeguards: Records are located in lockable metal file cabinets or in metal file cabinets in secured rooms with access limited to those whose official duties require access.

Retention and disposal: Retained indefinitely.

System manager(s) and address:

Director of Personnel
Board of Governors
Federal Reserve System
20th and Constitution, N.W.
Washington, D.C. 20551

Notification procedure: Inquiries, including name, date of birth, and Social Security Numbers should be addressed to the System Manager, address above.

Record access procedures: Current and former System employees who wish to gain access to and contest their records, should direct such a request in writing, including their name, date of birth, and Social Security Number to the System Manager, address above.

Record source categories: Information in this system of records comes from either the individual to whom it applies, extracted from documents he supplied, or data provided by Federal Reserve System officials and employees.

Systems exempted from certain provisions of the act: None.

BGFRS—13

System name: FRB—General File of Examiners and Assistant Examiners at Federal Reserve Banks.

System location:

Board of Governors
Federal Reserve System
20th and Constitution, N.W.
Washington, D.C. 20551

Categories of individuals covered by the system: Past and present examiners and assistant examiners at Federal Reserve Banks.

Categories of records in the system: Brief biographies of past and present examiners and assistant examiners, oaths of office, and miscellaneous correspondence.

Authority for maintenance of the system: Section 11 of the Federal Reserve Act (12 U.S.C. Sec. 221 et seq.)

Routine uses of records maintained in the system, including categories of users and the purposes of such uses: Used as background information for determining qualifications for appointment, reappoint-

ment, etc.; for compiling information for news releases and other publications, and recording correspondence concerning such persons.

Policies and practices for storing, retrieving, accessing, retaining, and disposing of records in the system:

Storage: Paper records.

Retrievability: Indexed by name.

Safeguards: Locked in Supreme power file. Access limited to Board staff on a restricted basis.

Retention and disposal: Indefinite.

System manager(s) and address:

Secretary of the Board
Board of Governors
Federal Reserve System
20th and Constitution, N.W.
Washington, D.C. 20551

Notification procedure: System Manager, as indicated above.

Record access procedures: Same as "notification" above.

Record source categories: Individuals themselves, references such as "Who's Who" and miscellaneous correspondence from system personnel and others.

Systems exempted from certain provisions of the act: Pursuant to subsection (k)(5) of the Privacy Act and the Board's regulations relating thereto, certain portions of this system of records may be exempted from certain provisions of the Act where such portions represent investigatory material compiled solely for the purpose of determining suitability, eligibility, or qualifications for Board employment to the extent that disclosure of such portions would reveal the identity of a source who furnished information under a promise of confidentiality.

BGFRS—14

System name: FRB—General File of Federal Reserve Bank and Branch Directors.

System location:

Board of Governors
Federal Reserve System
20th and Constitution, N.W.
Washington, D.C. 20551

Categories of individuals covered by the system: Past and present Federal Reserve Bank and Branch Directors.

Categories of records in the system: Biographies of past and present Federal Reserve Bank and Branch Directors, oaths of office, resignations, and miscellaneous correspondence.

Authority for maintenance of the system: Sections 3, 4 and 11 of the Federal Reserve Act (12 U.S.C. Sec. 221 et seq.).

Routine uses of records maintained in the system, including categories of users and the purposes of such uses: Used as background information for determining qualifications for appointment, reappointment, etc.; for compiling information for news releases and other publications, and recording correspondence concerning such persons.

Policies and practices for storing, retrieving, accessing, retaining, and disposing of records in the system:

Storage: Paper records.

Retrievability: Indexed by name.

Safeguards: Locked in Supreme power file. Access limited to Board staff on a restricted basis.

Retention and disposal: Indefinite.

System manager(s) and address:

Secretary of the Board
Board of Governors
Federal Reserve System
20th and Constitution, N.W.
Washington, D.C. 20551

Notification procedure: Same as System Manager, address above.

Record access procedures: Same as System Manager, address above.

Record source categories: Generated by individual's incoming correspondence and staff response thereto.

Systems exempted from certain provisions of the act: Pursuant to subsection (k)(5) of the Privacy Act and the Board's regulations relating thereto, certain portions of this system of records may be exempted from certain provisions of the Act where such portions represent investigatory material compiled solely for the purpose of determining suitability, eligibility, or qualifications for Board employment to the extent that disclosure of such portions would reveal the identity of a source who furnished information under a promise of confidentiality.

BGFRS—15

System name: FRB—General Files of Federal Reserve Agents, Alternates and Representatives at Federal Reserve Banks.

System location:

Board of Governors
Federal Reserve System
20th and Constitution, N.W.
Washington, D.C. 20551

Categories of individuals covered by the system: Past and present Federal Reserve Agents, Alternates and Representatives at Federal Reserve Banks.

Categories of records in the system: Biographies of past and present examiners, oath of office and miscellaneous correspondence relating to such persons.

Authority for maintenance of the system: Sections 20 and 21 of the Federal Reserve Act (12 U.S.C. Sec. 221 et seq.).

Routine uses of records maintained in the system, including categories of users and the purposes of such uses: Used as background information for determining qualifications for appointment, reappointment, etc.; for completing information for news releases and other correspondence; and recording correspondence concerning such persons.

Policies and practices for storing, retrieving, accessing, retaining, and disposing of records in the system:

Storage: Paper records.

Retrievability: Indexed by name.

Safeguards: Locked in Supreme power file. Access limited to Board staff on a restricted basis.

Retention and disposal: Indefinite.

System manager(s) and address:

Secretary of the Board
Board of Governors
Federal Reserve System
20th and Constitution, N.W.
Washington, D.C. 20551

Notification procedure: Same as System Manager, address above.

Record access procedures: Same as System Manager, address above.

Record source categories: Generated by individual's incoming correspondence and staff response thereto.

Systems exempted from certain provisions of the act: Pursuant to subsection (k)(5) of the Privacy Act and the Board's regulations relating thereto (12 CFR 261a), certain portions of this system of records may be exempted from certain provisions of the Act where such portions represent investigatory material compiled solely for the purpose of determining suitability, eligibility, or qualifications for Board employment to the extent that disclosure of such portions would reveal the identity of a source who furnished information under a promise of confidentiality.

BGFRS—16

System name: FRB—Regulation G Reports

System location:

Board of Governors
Federal Reserve System
20th and Constitution, N.W.
Washington, D.C. 20551

Categories of individuals covered by the system: Individuals other than banks, brokers and dealers who extend credit in specified amounts secured by margin securities.

Categories of records in the system: Reports filed by persons registered pursuant to Regulation G.

Authority for maintenance of the system: Sections 7, 17, and 23 of the Securities Exchange Act of 1934 and Regulation G (12 CFR 207).

Routine uses of records maintained in the system, including categories of users and the purposes of such uses: Aid the Federal Reserve System in securing compliance with Regulation G, assist registrants regarding interpretation, and where this system indicates a violation or potential violation of law, whether civil, criminal or regulatory in nature, and whether arising by general statute or particular program statute, or by regulation, rule or order issued pursuant thereto, the relevant records in the system of records may be referred, as a routine use, to the appropriate agency, whether Federal, state, local or foreign, charged with the responsibility of investigating or prosecuting such violation or charged with enforcing or implementing the statute, or rule, regulation or order issued pursuant thereto.

Policies and practices for storing, retrieving, accessing, retaining, and disposing of records in the system:

Storage: Paper forms and files.

Retrievability: Indexed by name.

Safeguards: Retained in locked metal file cabinets. Access to Board staff on restricted basis.

Retention and disposal: Indefinite.

System manager(s) and address:

Director, Division of Banking Supervision and Regulation
Board of Governors
Federal Reserve System
Washington, D.C. 20551

Notification procedure:

Secretary of the Board
Board of Governors
Federal Reserve System
20th and Constitution, N.W.
Washington, D.C. 20551

Record access procedures: Same as System Manager address above.

Record source categories: Reports and forms filed by individuals to whom records pertain.

Systems exempted from certain provisions of the act: Pursuant to subsection (k)(2) of the Privacy Act and the Board's regulations relating thereto (12 CFR 261a) certain portions of this system of records may be exempted from certain provisions of the Act where such portions represent investigatory material compiled for law enforcement purposes.

BGFRS—17

System name: FRB—Municipal Securities Principal and Municipal Securities Representative Records.

System location: Board of Governors of the Federal Reserve System, 20th and Constitution Avenue NW., Washington, D.C. 20551. Records stored in computerized files are maintained off Board premises at the National Association of Securities Dealers, 1735 K Street NW., Washington, D.C. 20036.

Categories of individuals covered by the system: Persons who are or seek to be municipal securities principals or municipal securities representatives associated with a municipal securities dealer which is a State member bank of the Federal Reserve System or a subsidiary or a department or division thereof.

Categories of records in the system: These records may contain identifying information as well as educational, employment, and disciplinary information, and, where applicable, information regarding termination of employment of individuals covered by the system. Identifying information includes name, address, date and place of birth, and may include social security account number.

Authority for maintenance of the system: Sections 15B, 17, and 23 of the Securities Exchange Act of 1934 (15 U.S.C. Secs. 78o-4(c)(5), 78q, and 78w) and section 11(a) of the Federal Reserve Act (12 U.S.C. Sec. 248(a)).

Routine uses of records maintained in the system, including categories of users and the purposes of such uses: Information in these records may be used:

a. To refer, where there is an indication of a violation or potential violation of law, whether civil, criminal, or regulatory in nature, to the appropriate governmental authority, whether Federal, State, local, or foreign, or self-regulatory organization, as defined in section 3(a)(26) of the Securities Exchange Act of 1934 (15 U.S.C. 78c(a)(26)).

b. To refer, in the event of litigation, whether civil, criminal, or regulatory in nature, to the appropriate court, magistrate, or administrative law judge.

c. To assist in any proceeding in which the Federal securities or banking laws are in issue or in which the Federal Reserve Board or a past or present member of its staff is a party or otherwise involved in an official capacity.

d. To disclose to a Federal, State, local, or foreign governmental authority or a self-regulatory organization if necessary in order to obtain information relevant to a Federal Reserve Board inquiry concerning a person who is or seeks to be associated with a municipal securities dealer described in Categories of individuals covered by the system as a municipal securities principal or municipal securities representative.

e. To respond to a request from a Federal, State, local, or foreign governmental authority or a self-regulatory organization for information in connection with the issuance of a license or other benefit to the extent that such information is relevant and necessary.

f. To disclose to a Congressional office from the record of an individual in response to an inquiry from the congressional office made at the request of that individual.

Policies and practices for storing, retrieving, accessing, retaining, and disposing of records in the system:

Storage: Records are maintained in file folders and on computer discs.

Retrievability: Records are indexed by name.

Safeguards: File folders are stored in lockable metal cabinets and computer discs are accessed only by authorized personnel.

Retention and disposal: Records may be maintained indefinitely.

System manager(s) and address: Secretary of the Board, Board of Governors

Federal Reserve System
20th and Constitution, NW.,
Washington, D.C. 20551

Notification procedure: Inquiries, including name and date and place of birth, should be addressed to the System Manager, address above. Inquiriers may be required to include a notarized statement attesting to identity.

Record access procedures: Same as Notification above.

Contesting record procedures: Same as Notification above.

Record source categories: Individuals on whom the records are maintained as well as municipal securities dealers described in Categories of individuals covered by the system and Federal, State, local, and foreign governmental authorites, and self-regulatory organizations, which regulate the securities industry.

Systems exempted from certain provisions of the act: None.

BGFRS—18

System name: FRB-Changes in Bank Control Records.

System location: Board of Governors of the Federal Reserve System, 20th and Constitution, NW., Washington, D.C. 20551.

Categories of individuals covered by the system: Individuals who acquire or propose to acquire control of a bank holding company or insured bank.

Categories of records in the system: Contains the name of the individual purchaser of shares of stock, details of the transaction, personal financial and biographical statements, and information regarding the individual's business associations. Identifying information includes name and address and may include date of birth and social security number.

Authority for maintenance of the system: Section 7(j) of the Federal Deposit Insurance Act (12 U.S.C. 1817(j)).

Routine uses of records maintained in the system, including categories of users and the purposes of such uses: The name of the affected bank or bank holding company, the seller and purchaser, the number of shares involved, and other material details of the transaction may be distributed for publication and incorporated in public orders and notices issued by the Board in the discharge of its statutory responsibilities. As required by law, certain of the records will be made available to Federal and State banking authorities and the Board will seek to insure that the receipt of information by those authorities is subject to appropriate safeguards. In the event that the system of records indicates a violation or potential violation of law, the relevant records in the system of records may be referred to the appropriate Federal or State agency charged with the responsibility of investigating or prosecuting such violation or charged with enforcing or implementing the relevant statute, rule, regulation or order. In the event of civil, criminal, or administrative law enforcement proceedings, the relevant records may be disclosed to the appropriate court or counsel for purposes of discovery and the development of the proceedings.

Policies and practices for storing, retrieving, accessing, retaining, and disposing of records in the system:

Storage: Paper records.

Retrievability: Indexed by name.

Safeguards: Locked in Diebold power file. Access limited to Board staff on a restricted basis.

Retention and disposal: Indefinite.

System manager(s) and address: Secretary of the Board, Board of Governors of the Federal Reserve System, 20th and Constitution, NW., Washington, D.C. 20551.

Notification procedure: Inquiries should be addressed to the System Manager, address above. Inquirers may be required to include notarized statement attesting to identity.

Record access procedures: Same as Notification above.

Contesting record procedures: Same as Notification above.

Record source categories: Principally generated by the individuals to whom the records pertain, supplemented by information from financial institutions and Federal and State banking authorities.

Systems exempted from certain provisions of the act: None.

[FR Doc. 79-39833 Filed 12-28-79; 8:45 am]
BILLING CODE 6210-01-M

federal register

Monday
December 31, 1979

Part VI

Environmental Protection Agency

Health and Safety Data Reporting; Submission of Lists and Copies of Health and Safety Studies

ENVIRONMENTAL PROTECTION AGENCY

40 CFR Part 716

[OTS-084003; FRL 1359-6]

Health and Safety Data Reporting; Submission of Lists and Copies of Health and Safety Studies

AGENCY: Environmental Protection Agency (EPA).

ACTION: Proposed rule; notice of opportunity for comment.

SUMMARY: This rule would require submission of health and safety studies on specifically listed chemicals by chemical manufacturers, processors, distributors, and others in possession of such studies. These chemicals have either been recommended by the Interagency Testing Committee for testing under section 4 of the Toxic Substances Control Act (TSCA) or separately selected by the Environmental Protection Agency for evaluation. The Administrator will use these studies to assess the health and environmental effects of the chemicals and the need for and character of testing rules to be promulgated under section 4(a) of TSCA. In order to obtain health and safety studies on additional chemicals in the future, the Administrator will amend this rule from time to time by adding to the list of chemicals subject to the rule.

DATES: Comments must be received on or before February 29, 1980.

ADDRESS: Written comments should bear the document control number OTS-084003 and should be submitted to the Document Control Officer, Office of Toxic Substances (TS-793), U.S. Environmental Protection Agency, 401 M Street, SW, Washington, D.C. 20460. All written comments filed pursuant to this notice will be available for public inspection at the OTS reading room at the above address from 9:00 a.m. to 5:00 p.m. Monday through Friday.

FOR FURTHER INFORMATION CONTACT: Mr. John B. Ritch, Industry Assistance Office (TS-799), Environmental Protection Agency, 401 M Street, SW, Washington, D.C. 20460, 800-424-9065 toll free; in Washington, D.C., please call 554-1404.

SUPPLEMENTAL INFORMATION:

Authority and General Purpose

Section 8(d) of TSCA (15 U.S.C. 2607(d)) authorizes the Administrator to promulgate rules under which the Administrator shall require submission of lists and copies of health and safety studies on chemical substances or mixtures.

Persons who may be required to submit lists of studies are persons who manufacture, process, or distribute in commerce the substances or mixtures or who propose to do so. The studies to be listed are those conducted at any time by or for such persons, or known to such persons, or reasonably ascertainable by such persons.

These same persons may be required to submit copies of studies listed by or otherwise known by them. Moreover, any person who possesses a study that is on a submitted list or that is otherwise known to him may be required to submit that study. Section 8(f) of TSCA (15 U.S.C. 2607(f)) states that for purposes of section 8, the terms "manufacture" and "process" mean manufacture or process for commercial purposes. therefore, manufacturers and processors who are potentially subject to the requirement to submit lists under section 8(d) are those who manufacture or process chemical substances and mixtures for commercial purposes.

This notice proposes a rule under the authority of section 8(d). The proposed rule sets forth requirements and procedures for submission of lists of health and safety studies by manufacturers, processors, and distributors in commerce of chemical substances and mixtures, and for submission of copies of final reports by persons in possession of studies. The lists and copies of health and safety studies would be submitted on chemicals specifically listed in 40 CFR 716.13 of the proposed rule. The Agency intends to collect information on additional chemicals in the future by adding to the chemicals listed in this rule. The collected studies will be used by EPA in evaluating health and environmental effects of chemicals as well as in determining whether the chemicals should be included in testing rules issued under section 4 of TSCA.

The Interagency Testing Committee (ITC), established under section 4(e) of TSCA (15 U.S.C. 2603(e)), recommends chemical substances, categories of substances, and mixtures for priority consideration by EPA in the issuance of testing rules under section 4(a) of TSCA (15 U.S.C. 2603(a)). Section 4(e) directs the ITC to revise the list every six months as it is determined to be necessary. The Agency is developing this rule to obtain health and safety studies relating to each group of substances and mixtures selected by the ITC as well as other chemicals separately selected by EPA for evaluation of health and environmental effects. As EPA develops testing rules under section 4, it expects to propose additions to the list of chemicals subject to this section 8(d) rule. The purpose of the additions will be to assist EPA to obtain any existing information which could provide guidance as to the kinds of testing needed or which could make further testing unnecessary. This section 8(d) rule will also be applied to gather information which will be used by the Agency in its other regulatory functions.

Background

On July 18, 1978, EPA promulgated a rule similar to the one proposed in this notice (43 FR 30984). That rule required persons who manufacture, process, or distribute in commerce the chemicals on the first ITC priority list to submit lists and copies of health and safety studies on those chemicals. The rule was corrected in two minor respects shortly after its promulgation (43 FR 36249, 43 FR 41205).

On September 12, 1978, the Manufacturing Chemists Association (MCA) filed a petition requesting EPA to amend or repeal the July 18 rule. With minor exceptions, EPA rejected the petition. The issues raised by MCA and EPA's responses to those issues are set forth at 43 FR 56724.

On September 15, 1978, Dow Chemical Company (Dow) filed a petition for review of the rule in the United States Court of Appeals for the Third Circuit, *Dow Chemical Company* v. *United States Environmental Protection Agency, No. 78-2203.* Dow's petition challenged two provisions of that rule on the following grounds relating to the scope of the Agency's statutory authority. First, Dow asserted that EPA does not have the authority to obtain studies on chemicals manufactured or processed for research and development purposes since it was claimed such chemicals are not manufactured or processed for commercial purposes. Second, Dow asserted that EPA does not have the authority under section 8(d) to obtain copies of studies on a chemical from companies that do not manufacture, process or distribute that chemical. These issues were also raised by MCA in its petition.

In addition, Dow asserted that EPA did not provide adequate notice and fair opportunity to comment with respect to provisions in the July 18 rule that required persons subject to the rule to submit studies on acute effects of chemicals and that required companies to submit studies on chemicals they do not manufacture, process, or distribute.

Dow's challenge of EPA's interpretation of its statutory authority was denied on August 24, 1979. The court ruled that (i) chemicals

manufactured or processed for research and development are manufactured or processed for commercial purposes and (ii) that the EPA has the authority under 8(d)(2) to require persons to submit copies of studies on chemicals that they do not manufacture, process, or distribute. However, we are soliciting comments on whether we should exercise the full extent of our authority on these and other provisions of the proposed rule.

During the proceedings in the Dow lawsuit, the following became apparent. Reporting under the rule was substantially completed by October 16, 1978. Dow did not request a judicial stay of the rule but submitted a substantial number of studies and presumably complied with the rule. It appeared that EPA had received almost all the important information it would receive under the subject rule. In addition, EPA was in the process of developing another rule under section 8(d) for the purpose of obtaining health and safety studies on other chemicals recommended by the ITC, and Dow and others would have adequate opportunity to again raise all of the issues when that next section 8(d) rule was proposed. Also, EPA decided that Dow had raised substantial questions on whether adequate notice and comment were provided with respect to some provisions of the July 18 rule, although EPA entertained no doubt that the provisions of the rule were within the Agency's statutory authority. All of the above considerations led EPA to revoke the July 18 rule.

In the notice of revocation (44 FR 6099), EPA stated its opinion that it had the authority to obtain studies from persons who manufacture or process chemicals for research and development and to obtain copies of studies on substances from persons in possession of such studies whether or not they manufacture, process, or distribute the substances. However, EPA stated that it would accept comments on the issue of whether under any given section 8(d) rule it should exercise the full extent of its authority.

The notice also stated that since EPA had already received substantial information under the July 18 rule, it had determined that it would best use its resources by revoking that rule and considering all issues at a later date in a rule covering both the chemicals subject to the July 18 rule and additional chemicals recommended by the ITC and other chemicals separately selected by EPA. In this way, all of the controversy could be addressed in the context of a rule with future effect rather than a rule which had already been complied with and would soon be superseded in any event.

This present proposed rule requires reporting of lists and copies of studies on all chemicals included in the July 18 rule, as well as additional chemicals recommended by the ITC and other chemicals separately selected by EPA. While EPA is proposing a rule that would exercise authority substantially similar to that exercised in the July 18 rule, the agency specifically requests comment on whether it should exercise such authority as a matter of policy. Any comment the agency receives on this matter will receive serious consideration before any final decision is made.

Chemical Substances Subject to the Rule

40 CFR 716.13 of the proposed rule contains, and will be expanded in the future to contain, all chemical substances selected by the ITC (see 42 FR 55026, 43 FR 16684, 43 FR 50630, 44 FR 31866) as well as other chemicals separately selected by EPA. The list of chemicals and categories of chemicals in 40 CFR 716.13 includes chemicals other than those so far recommended for testing by the ITC. Of these, several are among substances for which the ITC has estimated exposures and potential for adverse effects as part of its selection process. EPA considered these exposure and effects rankings in choosing these chemicals for further investigation. Asbestos, chlorinated dioxins, and chemicals associated with production of chlorinated dioxins are also included. Asbestos and chlorinated dioxins are known to adversely affect health. To assess the scope of potential adverse effects on health and the environment of each listed chemical, the Agency is proposing to gather existing unpublished studies by means of this rule.

General Requirements of the Rule

This proposed rule would require manufacturers, processors, distributors, and others possessing studies to submit health and safety data relating to the chemical substances and mixtures listed in 40 CFR 716.13 of the rule. The rule proposes two types of submission requirements—the requirement to submit copies of final reports of health and safety studies (with an appropriate index-list) and the requirement to submit lists of certain additional health and safety studies.

The requirement to submit copies of studies would be applied in two ways. First, when the rule goes into effect, all manufacturers, processors, and distributors of chemical substances or mixtures would be required to submit copies of any final reports they possess of unpublished studies on any chemical substance or mixture listed in 40 CFR 716.13 of the rule. Second, EPA may request copies from persons other than manufacturers, processors, and distributors when such person is identified as possessing a study that is listed by someone else in accordance with 40 CFR 716.16 of the rule. Such persons would be required to submit studies only upon written request by the EPA.

This copy submission requirement applies to any manufacturer, processor, or distributor whether or not a company has ever manufactured, processed, or distributed the chemical that is the subject of the study or has ever proposed to do so.

Section 8(d)(2) of TSCA Permits EPA to require *any person* to submit a copy of *any* study in his possession. However, EPA believes that the two requirements described above will be effective, and, therefore it may not be necessary to require submission of copies of final reports of studies from everyone possessing them. Persons in research laboratories of universities and other institutions for instance are likely to publish their findings; hence, little would be gained in including them in the proposed requirement. Moreover, such persons who possess unpublished studies would be covered by the requirement to submit them in response to a letter if the studies are listed in accordance with 40 CFR 716.16.

Although EPA is presently proposing to require submission of copies from any chemical manufacturer, processor, or distributor, EPA is considering whether to further limit the copy submission requirement for those persons. One alternative under consideration would require the manufacturer, processor, or distributor of any one chemical listed in 40 CFR 716.13 to submit copies of studies it possesses on any listed chemical. Another alternative under consideration would require any person who manufactured, processed, or distributed a listed chemical(s) or proposed to do so since January 1, 1950, to submit copies of studies on that chemical(s). The January 1, 1950, date was chosen because the experimental methods after this date generally utilize more advanced analytical techniques, such as, gas and column chromatography, high pressure liquid chromatography, and radio tracer techniques.

EPA desires specific comments on these alternatives and on any others it might use to obtain copies of health and safety studies.

The requirement to list studies would be applied to *current* manufacturers,

processors, and distributors of chemicals which are the subject of the studies and those who propose to manufacture, process, or distribute the chemicals. The persons subject to this requirement are only responsible for listing studies on the chemicals which they manufacture, process, or distribute. These persons must submit lists of ongoing studies conducted by or for them and studies known to them but not in their possession. This means for example that a company would have to include on its list studies referenced in memoranda in its files, thereby necessitating a more extensive file search than that required by a company submitting studies in its possession. EPA believes this is consistent with the intent of Congress to place a greater burden to submit information concerning a particular chemical on the manufacturer, processor, or distributor of that chemical. Such persons should naturally bear greater responsibility for submitting information related to any threat to the public that may occur from their particular chemical.

Specific Definitions

Section 8(d) applies in part to persons who manufacture, process, or distribute in commerce chemical substances and mixtures and to persons who propose to do so. TSCA sections 3(7) and 3(10) define "manufacture" and "process". Section 8(f) states that, for purposes of section 8, "manufacture" and "process" mean manufacture and process "for commercial purposes". The terms "manufacture for commercial purposes" and "process for commercial purposes" are specifically defined in the proposed rule.

The term "manufacture" is defined in section 3(7) of TSCA to include manufacture, importation, and production. The term "process" is defined in section 3(10) of TSCA to mean preparation of a chemical substance or mixture for distribution in commerce in the same or different form or physical state from that in which it was received, or as part of an article containing the chemical substance or mixture. Thus, a paint formulator placing a solvent in the product intended for distribution in commerce is a processor (of the solvent) as defined in TSCA.

EPA interprets the term "manufacture or process for commercial purposes" to refer to such activities conducted, in whole or in part, for the purpose of obtaining a commercial advantage for the manufacturer or processor. This may be distinguished from strictly charitable or purely academic activities. TSCA places the responsibility for gathering information in support of chemical regulation on those persons who will derive the commercial benefits from those chemicals.

Chemicals manufactured for product research and development would fall within the scope of this rule because these chemicals are produced for the potential commercial benefit of the manufacturer.

Health and safety studies of chemicals at the research and development stage may be of substantial benefit to EPA in evaluating chemical hazards. In the case of chemicals that have yet to be marketed, such studies enable EPA to evaluate the potential hazards of chemicals and take action to prevent harm before a chemical becomes firmly entrenched in the marketplace and becomes difficult to remove becaue of the economic and social dislocations that would occur. Also, a company may perform research and development on a chemical that it does not market, but is marketed by another company. Such a chemical may be marketed in substantial quantities and there may be considerable human and environmental exposure. In addition, tests performed at the research and development stage may provide the best available information on the effects of related chemicals. Again, such related chemicals may already be in the marketplace but no significant health and safety studies may ever have been conducted on them. Even at the research and development stage, chemicals may be produced in large quantities that could result in significant exposure. Furthermore, a company performing research and development may perform a study that shows a new chemical is too toxic to market and decide not to market it. If EPA cannot find out about the study, the Agency may permit marketing of the chemical in substantial quantities by another company. EPA also has an interest in obtaining information necessary to protect laboratory workers who are involved in research and develoment.

Chemicals that occur as byproducts or impurities from the manufacturing or processing of other chemicals are also considered to be manufactured or processed "for commercial purposes" even though they may have no commerical purpose separate from the substance, mixture, or article to which they are incidental. See Inventory Reporting Regulations 40 CFR 710, 4(d); 42 FR 64577 (1977). The legislative history of TSCA indicates that a broad interpretation of the term "commercial purpose" was intended. Specifically addressing the definition of "for commercial purposes," the House Committee stated:

> By use of the term "for commercial purposes," the Committee does not intend to restrict coverage to substances manufactured or processed "for sale." Any commercial purpose such as use as a chemical intermediate in a manufacturing process, is sufficient to bring the manufacture or processing of a substance within the ambit of [the Act]. H.R. Rep. No. 94-1341, 94th Cong., 2d Sess. 30 (1976)

Chemical intermediates which never leave the manufacturing plant and which are not manufactured "for sale" or even "for distribution in commerce" nevertheless are manufactured for commercial purposes. Likewise, byproducts or impurities not manufactured "for sale" are considered by EPA to be manufactured for commercial purposes.

When a company manufactures a particular chemical substance or mixture for commercial purposes, other chemicals may be produced concurrently. These other chemicals may be byproducts that are separated from the principal commercial products and sold, used, or discarded, or they may remain in the manufactured chemical as impurities. These byproduct chemicals that are developed for sale or use as commercial products, of course, are manufactured for commercial purposes. EPA interprets TSCA to mean that the discarded byproducts and the impurities, although they may have no commercial purpose separate from the chemical product with which they are associated, are also manufactured or processed for "commercial purposes." The Agency notes further that a byproduct discarded by one manufacturer may be developed for sale by another. In either case the byproduct is manufactured for commercial purposes.

EPA does not believe that one manufacturer should be able to avoid listing a study on the byproduct simply because the byproduct is discarded, since EPA believes that many substances which occur as byproducts or impurities may be more hazardous than the chemical substance or mixture with which they are associated. If the Agency is to carry out the purpose of the Act, it must obtain studies on these materials. An example of this situation is the case of chlorinated dioxins, highly toxic chemicals which appear as impurities or byproducts from the manufacture of certain halogenated phenols, such as, 2,4,5-trichlorophenol and pentachlorophenol. The chlorinated dioxins that occur as impurities are typically carried along in the processing of the products in which they are found.

Chlorinated dioxins, accordingly, are covered by this rule as chemicals manufactured or processed "for commercial purposes."

"Propose to manufacture, process, or distribute" is defined in this rule to mean that a person has made a management decision to commit financial resources toward the manufacture, processing, or distribution of a chemical substance or mixture. Thus, a person who purchases small amounts of a chemical substance for research and development would have to report any health and safety studies when management proposes to process or manufacture the substance for commercial purposes.

"Health and safety study" is defined in this rule as it is defined in section 3(6) of TSCA. However, examples have been added to the definition of "health and safety study" for illustrative purposes. Examples are of types of studies which are included in the definition of health and safety study. Studies of the following effects are included: carcinogenicity, mutagenicity, pharmacological effects, cumulative or synergistic effects, and any other effect regardless of severity. Environmental studies include chemical fate, persistence, and chemical-physical constants, as well as ecological effects. Other kinds of studies, such as monitoring studies, both workplace and environmental, are included. Although this is not an exclusive list, it illustrates the types of studies that should be submitted.

This proposed rule applies to health and safety studies of any effect for the listed substances. The Agency proposes to acquire and evaluate studies of any health and environmental effects associated with chemicals both for the development of section 4 testing rules and to fulfill other purposes of TSCA. It is important to know the full range of possible toxic effects of a substance in evaluating and predicting its biological activities. Chemical fate and persistence studies will help in predicting environmental contamination. Studies of acute effects will help in assessing the potential of chemicals to cause adverse effects in the environment, as well as indicating the possibility of other health effects. Acute effects studies designed to measure potential ecological effects are especially valuable since there is comparatively less information in this field than in others. Also, the submission of acute effects studies will be used to determine the need for and character of acute-effects testing rules.

"Copies of Health and Safety Studies" as defined in this rule means copies of final reports from the principal investigators of health and safety studies. This is intended to circumvent endless review of studies by persons other than the principal investigators of the studies. A health and safety study is final when a report is available from the principal investigator, not when it is available after management review. Management, of course, has an independent responsibility and right to review a study after it is submitted to EPA.

The term "known to" when applied to a health and safety study means to have direct or indirect knowledge of the existence of the study. For example, a company may directly know that a study exists because the company has the study in its possession or because another person has given the company a written report about it. A company has possession of a study when the study is contained in the official files of that company or in the files of any employee. Similarly, a company may indirectly know that underlying data are in the possession of a testing laboratory because the laboratory performed the study for the company or may indirectly know of a study because it is referenced in a memorandum in the files of an employee.

Reporting Schedule

Persons would be required to submit lists and copies of studies on or before 60 days from the effective date of promulgation of the list of chemical substances and mixtures in 40 CFR 716.13. This proposed rule does, however, include a provision for extending the submission deadline by 20 days. Extensions will only be granted because of extraordinarily long file searches.

Persons would have a continuing duty to submit lists of any studies initiated within five years after the date the chemical substance or mixture was added to the list in 40 CFR 716.13. Copies of final reports of studies listed as ongoing, or studies initiated within the five year reporting period, would have to be submitted within 30 days of the date they are obtained by persons required to report.

Sunset Provision

Requirements to report information under this rule would expire on a date within five years after the chemical to which the information pertains is added to the list in 40 CFR 716.13. If EPA determines that reporting should be continued, a notice to that effect will be published for comment.

Proposed Method for Adding ITC Chemicals to the Rule

The Agency is proposing adding the following provision to 40 CFR 716.13 of the proposed rule: "Upon publication in the FEDERAL REGISTER of the list of chemicals recommended for testing by the ITC, those chemicals become immediately subject to the provisions of this rule." The Agency is soliciting comments on this proposed provision.

Confidentiality

The Agency has interpreted section 8(d) to permit broad access to information. However, EPA is very much aware of the need to maintain the confidentiality of any legitimate trade secrets. Accordingly, every effort will be made under EPA's procedures to preserve confidential commercial information.

A person submitting a health and safety study under 40 CFR 716.15, 716.16, or 716.17 *may claim all or part of the study confidential.* However, the Agency is authorized by section 14(b) of TSCA to withhold health and safety data from disclosure only to the extent that disclosure would reveal (1) processing information and (2) percent composition of mixtures. Other information contained in the study, the disclosure of which would clearly be an unwarranted invasion of personal privacy (such as individual medical records), will be considered confidential as provided in title 5, United States Code, section 552(b)(6). The provisions of section 14(b) apply only to health and safety data concerning chemical substances or mixtures that (1) have been offered for commercial distribution or which are in the inventory of chemical substances under section 8(b) of TSCA or (2) for which testing is required under section 4 of TSCA or for which notification is required under section 5 of TSCA (See 44 FR 17673).

Any claims of confidentiality must be made at the time of submission, as provided in 40 CFR 2.203(a)(2) and in the manner specified in 40 CFR 716.21 of this proposed regulation. This rule contains a provision to require submission of two copies of studies containing confidential material—one copy indicating what data are claimed as confidential and one copy without the confidential information. EPA will presumptively consider failure to submit two copies as a waiver of the confidentiality claim. However, EPA will notify respondents who claim parts of studies confidential that they did not submit the required two copies. This provision affords persons the opportunity to correct errors and thus

prevent data claimed as confidential from being placed in the public file. To ensure proper handling of confidential material, submissions must be addressed to the Document Control Officer of the Office of Toxic Substances.

Economic Impact

EPA estimates that the total cost to industry of submitting lists and copies of health and safety studies on the listed chemicals at approximately $411,000.

The major cost of compliance with the section 8(d) requirements will be the cost of a file search to determine what health and safety studies are in the possession of the firm. It is assumed that during the file search for studies, the files will also be searched for references to studies that are not in the firm's possession. This cost will, of course, vary directly with the size of the firm, due to the assumption that larger firms have more files at more locations which must be accessed. Once the studies are located, the remaining compliance costs involve copying and processing the studies, making lists of studies which are in progress or not in the possession of the respondent, and reviewing the studies for confidential information. Each of these costs is outlined below.

File search	$111,120
Title and protocol listing	13,890
Photocopying (materials)	11,748
Photocopying (labor)	39,160
Managerial review	234,960
Total cost to industry	410,878

If we assume a ±30% margin or error in these estimates, the range of probable cost could vary from $288,000 to $534,000.

Spread over the entire chemical industry, such a cost is extremely minor. Furthermore, if the studies submitted allow EPA to forego even one secton 4 testing rule on a subject chemical, the cost avoided thereby would exceed the total cost of the section 8(d) rule.

Public Meetings

During the 60-day comment period, EPA personnel responsible for developing this proposal will be available to meet with interested persons from companies, trade associations, organized labor, and citizen organizations to discuss the proposal. EPA will provide facilities and make other necessary arrangements for such meetings. The Agency will make transcripts or summaries of the meetings for inclusion in the official public record.

Persons should call EPA's Industry Assistance Office at the number listed under "For Further Information Contact" above to request time for such a meeting or more information on them.

Most meetings will be held at EPA in Washington, D.C. However, in line with EPA's desire to facilitate input from smaller companies and local organizations, the Agency would hold a meeting outside of Washington in a locale central to a group requesting such a meeting where there is demonstrated interest in and need for it.

While the meetings will be open to the public, participation will be limited to those requesting the session and EPA personnel designated for the session.

Public Record

EPA has established a public record (docket number OTS-084003) for this proposed rulemaking document, which along with a complete index is available for inspection in the OTS Reading from 9:00 a.m. to 5:00 p.m. on working days (401 M Street, SW, Washington, DC, 20460). This record includes basic information considered by the Agency in developing this Proposed Rule. The Agency will supplement the record with additional information as it is received. The record includes the following categories of information:

(1) Health and Safety Study Reporting Regulations, July 18, 1978, Public Record, Docket No. 084001.

(2) Manufacturing Chemists Association—Petition under section 21 of TSCA, September 12, 1978.

(3) Denial of Citizens' Petition, 43 FR 56724-56727.

(4) The entire docket in *Dow Chemical Company v. United States Environmental Protection Agency, et. al. Docket No. 78-2203 (3rd Cir.).*

(5) Revocation of Rule, 44 FR 6099.

(6) Reports Impact Analysis of This Proposed Rulemaking Document.

EPA anticipates adding to the rulemaking record the following types of information:

(1) All comments on this proposed rule.

(2) All relevant support documents and studies.

(3) Records of all communications between EPA personnel and persons outside the Agency pertaining to the development of this rule. (This does not include any inter- or intra-agency memoranda unless specifically noted in the index of the rulemaking record).

(4) Minutes, summaries, or transcripts of any public meetings held to develop this rule.

(5) Any factual information considered by the Agency in developing the rule.

EPA will identify the complete rulemaking record on or before the date of promulgation of the regulation, as prescribed by section 19(a)(3) of TSCA, and will accept additional material for inclusion in the record at any time between this notice and such designation. The final rule will also permit persons to point out any errors or omissions in the record.

Note.—EPA has determined that this document does not contain a major proposal requiring preparation of a Regulatory Analysis under Executive Order No. 12044.

Dated: December 18, 1979.

Douglas M. Costle,

Administrator.

It is proposed that Title 40, Chapter I, be amended by adding the new Part 716 to read as follows:

PART 716—HEALTH AND SAFETY DATA REPORTING

Sec.
716.11 Scope and compliance.
716.12 Definitions.
716.13 Substances to which this Part applies.
716.14 [Reserved]
716.15 Requirement to submit copies of studies.
716.16 Requirement to submit lists of studies.
716.17 Persons in possession of listed studies.
716.18 Information not subject to mandatory reporting.
716.19 Schedule for submission of studies.
716.20 Sunset provision.
716.21 Confidentiality claims.

Authority: Secs. 8(d) and 14(c), Pub. L. 94-469, 90 Stat. 2029 (15 U.S.C. 2607(d)) and 90 Stat. 2035 (15 U.S.C. 2613(c)).

§ 716.11 Scope and compliance.

(a) This Part sets forth rules to require submission of lists and copies of health and safety studies on chemical substances and mixtures selected for priority consideration for testing rules under section 4(a) of the Toxic Substances Control Act (TSCA) and on other chemical substances and mixtures for which EPA requires health and safety information in fulfilling the purposes of TSCA.

(b) Section 15(3) of the GSCA makes it unlawful for any person to fail or refuse to timely submit information required under this Part. Section 16 provides that a violation of section 15 renders a person liable to the United States for a civil penalty and possible criminal prosecution. Under section 17, the district courts of the United States have jurisdiction to restrain any violation of section 15.

§ 716.12 Definitions.

The definitions set forth in section 3 of TSCA apply to this Part. In addition, the following definitions are provided for the purposes of this Part:

(a) "EPA" means the United States Environmental Protection Agency.

(b) "Copies of Health and Safety Studies" means copies of final reports from the principal investigator(s).

(c) "Health and safety study" means any study of an effect of a chemical substance or mixture on health on the environment or on both, including underlying data and epidemiological studies, studies of occupational or environmental exposure to a chemical substance or mixture, toxicological, clinical, and ecological or other environmental studies of a chemical substance or mixture, and any test performed under TSCA.

(1) Examples are:

(i) Long- and short-term tests of mutagenicity; carcinogenicity; or teratogenicity; data on behavioral disorders; dermatoxity; pharmacological effects; mammalian absorption; distribution; metabolism and excretion; cumulative, additive, and synergistic effects; and acute, subchronic, and chronic effects.

(ii) Tests for ecological or other environmental effects on invertebrates, fish, or other animals, and plants, including: acute toxicity tests, chronic toxicity tests, critical life safe tests, behavioral tests, algal growth tests, seed germination tests, plant growth or damage tests, microbial function tests, bioconcentration or bioaccumulation tests, and model ecosystem (microcosm) studies.

(iii) Assessments of the human and environmental impacts of a particular chemical substance, including surveys, tests and studies of: biological, photochemical, and chemical degradation; air, water and soil transport; biomagnification and bioconcentration; and chemical and physical constants (e.g., boiling point, vapor pressure, evaporation rates from soil and water, octanol-water partition coefficient, and water solubility).

(iv) Studies measuring or estimating concentrations of a particular chemical(s) anywhere in the environment, including the workplace.

(v) Studies measuring or estimating human or environmental exposure to a particular chemical(s) anywhere in the environment, including the workplace.

(vi) Industrial hygiene surveys; and

(vii) For purposes of this Part, individual files and medical records, lab notebooks, data points, daily monitoring records, etc. are considered to be underlying data.

(2) A health and safety study on a mixture containing a particular chemical substance is a health and safety study on the chemical substance to the extent the study reflects the effect(s) of the substance.

(d) "Importer" means any person who imports a chemical substance, including a chemical substance as a part of a mixture or article, into the Customs Territory of the United States and includes the person primarily liable for the payment of any duties on the merchandise or an authorized agent acting on his behalf (as defined in 19 CFR 1.11). Importer also includes, as appropriate:

(1) The consignee.

(2) The importer of record.

(3) The actual owner if an actual owner's declaration and superseding bond has been filed in accordance with 19 CFR 141.20.

(4) The transferee, if the right to draw merchandise in a bonded warehouse has been transferred in accordance with Subpart C of 19 CFR 144.

For the purpose of this definition, the Customs Territory of the United States consists of the 50 States, Puerto Rico, and the District of Columbia.

(e) "Known to" means that a person has direct or indirect knowledge of the existence of certain information. Direct knowledge means that a person has a study in his possession or knows of the study because he has been given a written report. Indirect knowledge means that a person knows of a study on the basis of written evidence in his files. This may occur when a testing laboratory has in its possession the underlying data for a study performed for the person subject to this rule or when a study is referenced in a memorandum in the files of the person or any employee of the person.

(f) "Manufacture" and "Process" means manufacture or process for commercial purposes.

(g)(1) "Manufacture for commercial purposes" means to import, produce, or manufacture with the purpose of obtaining an immediate or eventual commercial advantage for the manufacturer, and includes, among other things, such "manufacture" of any amount of a chemical substance or mixture,

(i) For commercial distribution, including for test marketing, and

(ii) For use by the manufacturer, including use for product research and development, or as an intermediate.

(2) "Manufacture for commercial purposes" also applies to substances that are produced coincidentally during the manufacture, processing, use, or disposal of another substance or mixture, including both byproducts that are separated from that other substance or mixture and impurities that remain in that substance or mixture. Such byproducts and impurities may, or may not, in themselves have commercial value. They are nonetheless produced for the purpose of obtaining a commercial advantage since they are part of the manufacture of a chemical product for a commercial purpose.

(h) "Person" includes any individual, firm, company, corporation, joint-venture, partnership, sole proprietorship, association, or any other business entity, any State or political subdivision thereof, any municipality, any interstate body, and any department, agency, or instrumentality of the Federal Government.

(i) "Possession" means that a person who is not a natural person has "possession" of a study when the study is contained in the official files of that person or in the files of any employee of that person.

(j) "Process for commercial purposes" means the preparation of a chemical substance or mixture, after its manufacture for distribution in commerce with the purpose of obtaining an immediate or eventual commercial advantage for the processor. Processing of any amount of a chemical substance or mixture is included. If a chemical substance or mixture containing impurities is processed for commercial purposes, then those impurities are also processed for commercial purposes.

(k) "Propose to manufacture, process, or distribute" means that a person has made a management decision to commit financial resources toward the manufacture, processing, or distribution of a chemical substance or mixture.

(l) "Protocol" means a detailed description of the study and conduct to be followed.

(m) "TSCA" means the Toxic Substances Control Act, 15 U.S.C. 2601 *et. seq.*

§ 716.13 Substances to which this Part applies.

The requirements of this Part apply to the chemical substances and mixtures listed below.

(a) As of (the date the final regulations are published in the Federal Register) the requirements of this Part apply to the following:

	CAS Numbers (examples for groups)
Acetonitrile	75-05-8.
Acrylamide	79-06-1.
Acrylic acid and 2-methylacrylic acid and their esters.	79-10-7 etc.
Acrylonitrile	107-13-1.
Alkyl epoxides—including all noncyclic aliphatic hydrocarbons with one or more epoxy functional groups.	75-21-8, 75-56-9, 106-88-7, 564-00-1, etc.
Alkyl phthalates—all alkyl esters of 1,2-benzene dicarboxylic acid (orthophthalic acid).	117-81-7, 26761-40-0, etc.

	CAS Numbers (examples for groups)
Aniline and chloro-, bromi-, and/or nitro-anilines.	142-04-1, 95-51-2, 108-42-9, 106-47-8, 95-76-1, 634-93-5, 106-40-1, 88-74-4, 99-09-2, 100-01-6, 97-02-9, 121-87-9, 89-63-4, 99-30-9, 3531-19-9, 827-94-1, 1817-73-8, 99-29-6.
Antimony	7440-36-0.
Antimony trioxide	1309-64-4.
Antimony sulfide	1345-04-6.
Aryl phosphates—phosphate esters of phenol or of alkyl-substituted phenols. Tri-aryl and mixed alkyl and aryl esters are included, but trialkyl esters are excluded.	26444-49-5, 115-86-6, 1330-78-5, etc.
Asbestos—naturally occurring mineral silicates; chrysotile, amosite, crocidolite, tremolite, actinolite, and anthophyllite.	1332-21-4, 12001-29-5, 12172-73-5, 17068-78-9.
Benzene	71-43-2.
Benzene (epoxyethyl)	96-09-3.
Bisazobiphenyl dyes and pigments derived from benzidine and its congeners, orthotolidine (dimethylbenzidine), dianisidine (dimethoxybenzidine), and dichlorobenzidine.	
DYES DERIVED FROM BENZIDINE	
Direct Black 4	2429-83-6.
Amidine Black RBN	
Direct Black RX	
Direct Black RW Ex. Conc.	
Direct Black 38	1937-37-7.
Amidine Black GA 200%	
Diazol Black JXA Double	
Direct Black E 200%	
Direct Black E Ex. Conc. New	
Direct Black BHX	
Direct Black GAC Conc. 200%	
Direct Black GX 200%	
Elcomine Direct Black CP Conc.	
Elcomine Direct Black GXP 200%	
Orcomine Direct Black GX 200%	
Synodirect Black GAC	
Direct Blue 2	2429-73-4.
Amidine Diazo Black BHSW Conc.	
Diazo Black BH	
Diazol Black BHA	
Elcomine Black BH	
Elcomine Navy Blue Btt	
Orco Diazo Black BH 125%	
Direct Blue 6	2602-46-2.
Amidine Blue 2B Conc.	
Direct Blue 2B 250%	
Direct Blue 2B Conc.	
Direct Fast Blue 2B Conc.	
Elcomine Blue 2B 250%	
Synodirect Blue 2B 100%	
Direct Brown 1A	3811-71-0.
Amidine Brown 3GC 250%	
Elcomine Brown D3G Conc.	
Direct Brown 2	2429-82-5.
Amidine Brown M Conc. New	
Direct Brown M	
Elcomine Brown M Conc.	
Direct Brown 6	2893-80-3.
Direct Brown 2R	
Direct Brown 31	2429-81-4.
Direct Brown B 125%	
Direct Brown BCW	
Elcofast Brown B Conc.	
Solamidine B	
Direct Brown 59	3476-90-2.
Amidine Brown DMB	
Direct Brown 74	8014-91-3.
Direct Catechine 3G	
Elcofast Catechine 3G	
Direct Brown 95	6071-86-6.
Chrome Leather Brown	
Diazol Light Brown BRN Ultra Conc.	
Direct Brown BRL	
Elcomine Brown BRLL	
Intralite Brown BRLL Conc.	
Synodirect Brown BRL 100%	
Direct Brown 154	6360-54-9.
Direct Brown 3GN	
Direct Brown CMD.	
Elcomine Brown 3GNP	
Direct Green 1	3626-28-6.
Amidine Dark Green N	
Chrome Leather Dark Green S Conc.	
Direct Green WS	
Elcomine Green WT	
Orcomine Dark Green WS	
Direct Green 6	4335-09-5.
Amidine Green 2BN	
Amidine Green M Special	
Direct Brilliant Green CBM Ex. Conc.	
Direct Green BX	
Direct Green MT 150%	
Elcomine Green MT 150%	
Orcomine Green BX	
Direct Green 8	5422-17-3.
Amidine Green GX	
Direct Orange 1	6507-81-9.
Orcolitefast Orange GLZ	
Direct Orange 8	2429-79-0.
Direct Fast Orange R	
Direct Paper Orange R Conc.	
Direct Orange R	
Elcomine Orange RP Conc.	
Paper Orange R	
Synodirect Orange Y 100%	
Direct Red 1	2429-84-7.
Amidine Fast Red F New	
Congo Red F	
Direct Fast Red F	
Elcofast Red FD	
Orcomine Red F	
Direct Red 28	573-58-0.
Congo Red	
Direct Congo Red 4B	
Elcomine Congo Red	
Orcomine Congo Red	
Synodirect Red 4B 100%	
Direct Red 37	3530-19-6.
Amidine Fast Scarlet BN Conc.	
Direct Fast Scarlet B	
Elcomine Scarlet B	
Orcomine Scarlet B	
Direct Violet 1	2586-60-9.
Amindine Violet N	
Elcomine Violet 3R Conc.	
Direct Violet 22	6426-67-1.
Elcomine Violet BW 200	
Acid Red 85	3567-65-5.
Intrazone Fast Red GRG	
Milling Red 2J	
Milling Scarlet G	
Nylon Fast Scarlet PG	
Supernylite Scarlet G	
DYES DERIVED FROM O-DIANISIDINE	
Direct Black 91	6739-62-4.
Cuprofix Black C-RL	
Cuprophenyl Black RL 200%	
Intramet Black GM	
Direct Black 114:	
Cupophenyl Black BWL	
Direct Black 118:	
Lumicrease Grey 3LBN	
Direct Blue 1	2610-05-1.
Amanil Sky Blue 6B	
Amanil Sky Blue FF	
Atlantic Sky Blue 6B Conc.	
Atlantic Sky Blue FF Ex. Conc.	
Calcomine Sky Blue 6 BX Conc.	
Diazol Blue 6BA Conc.	
Diphenyl Brilliant Blue FF Supra	
Direct Brilliant Sky Blue 6B Ex. Conc.	
Direct Sky Blue 6B	
Direct Sky Blue 6B Conc.	
Direct Sky Blue 6B Ex. 200%	
Direct Sky Blue 6B Ex. Conc. 300%	
Direct Sky Blue 6BHF	
Direct Sky Blue FF Ex. 200%, 300%	
Elcomine Sky Blue 6B 200%	
Pergasol Blue GA Conc.	
Phenamine Brilliant Blue 6B Conc.	
Pyrazol Sky Blue FF	
Direct Blue 8	2429-71-2.
Atlantic Azurine G Conc.	
Direct Azurine G	
Direct Azurine G Conc.	
Direct Blue 15	2429-74-5.
Amanil Sky Blue M Liquid	
Amidine Sky Blue 5B Ex.	
Atlantic Sky Blue A, Ex. Conc.	
Blue M Liquid	
Cartasol Blue 2GF	
Direct Sky Blue A Supra Conc. 125%	
Intrabond Liquid Sky Blue M	
Paper Sky Blue S Liquid 35	
Potamine Sky Blue M Liquid	
Direct Blue 22	2586-57-4.
Atlantic Direct Blue RW 100%	
Direct Blue RW Conc. 200%	
Direct Blue 76	16143-79-0.
Amafast Blue RW 16BLL	
Atlantic Resin Fast Blue 16BLL Conc.	
Atlantic Resin Fast Blue LLGG	
Diazol Light Blue 7JL U.C.	
Fastusol Brilliant Blue L2GU	
Resin Fast Blue 16BLL	
Superlitefast Brilliant Blue 16BLL	
Direct Blue 77	6441-88-9.
Pyrazol Fast Blue 2GLN	
Direct Blue 80:	
Atlantic Resin Fast Blue RLX	
Atlantic Resin Fast Blue 2RLL	
Elcofast Blue 2RL	
Fastusol Blue LRRU	
Intralite Blue 2RLL	
Pergasol Blue 4RAL	
Pyrazol Fast Blue RUL	
Resin Fast Blue 7RLL	
Sirius Supra Blue 2RL	
Solophenyl Blue ZRL	
Superlitefast Blue RL	
Superlitefast Blue RLE	
Intralite Blue NBLL	
Solophenyl Blue RBL	
Direct Blue 90:	
Pyrazol Fast Blue FGL	
Direct Blue 98	6656-03-7.
Atlantic Resin Fast Blue LLU	
Atlantic Resin Fast Blue LLU 200%	
Atlantic Resin Fast Blue LLUG	
Diazol Blue 3JLNA	
Direct Fast Navy BRN	
Fastusol blue LR	
Intralite Brilliant Blue L	
Pyrazol Fast Blue LUL	
Resin Fast Navy WRA	
Sirius Supra Blue BRL	
Direct Blue 100:	
Resin Fast Blue 3GLL	
Superlitefast GL	
Direct Blue 151	6449-35-0.
Diazo Fast Blue MP, MP Conc.	
Direct Blue R 100%, R. Conc.	
Elcofast Diazo Blue B Conc.	
Direct Blue 156:	
Cuprophenyl Navy Blue BL	
Intramet Navy Blue RL	
Direct Blue 160:	
Cupodiasol Light Navy RL	
Cuprofix Navy C-GRL	
Cuprophenyl Navy Blue RL	
Intramet Navy Blue R11 Conc. 200%	
Direct Blue 191:	
Resin Fast Blue 8GLN	
Superlitefast Blue 8GLN	
Direct Blue 218	10401-50-0.
Amafast Blue 3GAV Conc.	
Amafast Bond Blue 10GLP Conc., 10 GLPLiq.	
Bond Blue B	
Carta Blue VP	
Elcofast Bond Blue	
Fastusol Blue 9GLP Liq.	
Paper Blue 3 GAP	
Pergosol Blue 8GLP Liq.	
Pontimine Bond Blue B Liq.	
Pontimine Fast Blue 7GLN	
Pyrazol Fast Sky Blue 7GUL	
Resin Fast Blue 3GAV	
Sirius Supra Blue 5G	
Solophenyl Blue 8GL, 8GLP Liq.	
Superlitefast Blue WB	
Superlitefast Blue 8GUL	
Superlitefast Blue 3GLST	
Direct Blue 218/224:	
Intrabond Liquid Blue 8GLL	
Intralite Blue 8GLL	
Direct Blue 224:	
Atlantic Resin Fast Blue 7GUL	
Direct Blue 269 (o-anisidine):	
Potamine Blue AB Liq.	
Direct Brown 200:	

	CAS Numbers (examples for groups)
Limicrease Dark Brown 3LB	
Direct Yellow 68:	
Cuprophenyl Yellow RL Extra	
Intramet Yellow RL	
Direct Violet 93:	
Cuprophenyl Violet 3RL	
Azoic Blue Composition 2:	
Atlantic Printing Blue D-BC	
Atlantic Printing Blue D Pdr.	
Neutrazoic Blue AS Pdr.	
Neutrazoic Blue D	
Azoic Blue Composition 3:	
Atlantic Printing Blue GB	
Neutrazoic Blue GB Pdr.	
Neutrazoic Blue GN Pdr.	
Azoic Black Composition 4:	
Atlantic Printing Black 3G Pdr	
Direct Azoic Diazo Component 48	20282-70-6.
Atlantic Stable Blue B Pdr.	
Azonene Fast Blue B Salt	
Fast Blue D-ND Salt	
Fast Blue B Salt	
Fast Blue B-ND Salt	
Stable Blue B Base	
Axoic Coupling Component 3	91-92-9.
Naphthol AS-BR	
Naphthol AS-BR 20% Soln.	
Naphthol AS-BR, AS-BR Soln.	
Other Dyes Derived From 0-Dianisidine:	
Atlantic Printing Black 2b Pdr.	
Atlantic Printing Black FOR Pdr.	
Neutrazoic Black 2B Pdr.	
Neutrazoic Black FOR Pdr.	
Neutrazoic Black GF 167% Pdr.	
Neutrazoic Black JN Pdr.	
Padazoic Black GLL Pdr.	
Padazoic Black RLL Pdr.	
Padazoic Black 2G 150% Pdr.	
Atlantic Resin Fast Blue ARL BFL	
Atlantic Resin Fast Blue BLA	
Atlantic Resin Fast Blue BLC	
Atlantic Resin Fast Blue BRN	
Atlantic Resin Fast Blue 8BGL	
Atlantic Resin Fast Blue 3GLL	
Atlantic Resin Fast Blue 5GLL	
Atlantic Resin Fast Blue 8GLN	
Atlantic Resin Fast Blue LB GL	
Atlantic Resin Fast Blue 6GKS	
Atlantic Resin Fast Blue 8GUM	
Atlantic Resin Fast Blue 9GLR	
Atlantic Resin Fast Blue UGLL	
Atlantic Resin Fast Blue FFBL	
Padazoic Blue GP Pdr.	
Padazoic Denim Indigo Blue G Pdr.	
Padazoic Navy Blue WS EX Pdr.	
Pontamine Blue WE Liq.	
Padazoic Brilliant Indigo 3B Pdr.	
Padazoic Denim Indigo Pdr.	
Atlantic Printing Brown GGN Pdr.	
Atlantic Printing Brown BR Pdr.	
Neutrazoic Brown Br Pdr.	
Padazoic Farmer Brown Pdr.	
Atlantic Resin Fast Grey LVL	
Superlitefast Grey LVL	
Superlitefast Rubine WLKS	
DYES DERIVED FROM O-TOLIDINE	
Acid Red 114	6459-94-5.
Amacid Milling Red PRS	
Atanyl Red RS	
Erionyl Red RS, RS 125%	
Intrazone Red BR	
Levanol Fast Red GG New	
Milling Red SWB	
Milling Red SWB Conc.	
Nylon Fast Red RM	
Nylonsan Red F-RS	
Orcoacid Milling Red RS	
Polar Red RS Conc. 125%	
Telon Fast Red GG New	
Acid Red 167:	
Nylosan Red F-BR	
Milling Red B	
Polar Red B	
Acid Black 209:	
Sella Fast Black FC	
Azoic Coupling Component 5	91-96-3.
Naphthol ASG, ASG 20% Soln.	
Naphthol AS-G	
Naphthol AS-G Soln.	
Azoic Yellow Composition 1:	
Atlantic Printing Yellow GN Dbl. Soln.	
Atlantic Printing Yellow GS Dbl. Soln., GS Pdr.	
Azogen Yellow GS	
Neutrazoic Yellow 2G, 2G Pdr.	
Azoic Yellow Composition 2:	
Atlantic Printing Yellow 2G Pdr.	
Azogen Yellow GG Soln.	
Azogen Yellow GN	
Neutrazoic Yellow 2G, 2G Pdr.	
Azoic Yellow Composition 3:	
Neutrazoic Golden Yellow R, R Pdr.	
Azoic Orange Composition 3:	
Atlantic Printing Orange R, R Pdr., R Dbl. Soln.	
Direct Blue 14	72-57-1.
Carta Blue 3B	
Chrome Leather Blue 3B	
Diphenyl Blue 3B Conc.	
Direct Blue 3B Conc.	
Paper Blue 1	
Pergasol Blue 3B Conc.	
Direct Blue 25	2150-54-1.
Diazol Pure Blue BRA	
Diphenyl Brilliant Blue 5B	
Direct Brilliant Blue BC	
Direct New Blue 5B, 5B Conc.	
Pergasol Brilliant Blue 5B	
Pyrazol New Blue	
Direct Blue 26	7082-31-7.
Direct Chrome Blue Black B Ex. Conc.	
Direct Orange 6	6637-88-3.
Amidine Orange GG	
Direct Fast Orange Y 125%	
Direct Red	992-59-6.
Amanil Purpurine 4B Conc.	
Benzopurpurine 4B Ex. Conc., 4B Special	
Cotton Red 4BS Supra	
Diphenyl Red 4BS Supra	
Direct Purpurine 4B	
Elcomine Benzopurpurine	
Paper Red 4BS Conc.	
Pergasol Red 4BS Conc.	
Direct Red 39	6358-29-8.
Amidine Scarlet 3B	
Atlantic Scarlet 3B	
Carta Red 3B	
Direct Fast Red 3B	
Elcomine Scarlet 3B	
Orcomine Scarlet 3B	
Pyrazol Red 3B	
Direct Brown 230:	
Direct Fast Brown BR-NB Conc.	
Direct Fast Brown BRLT	
Direct Yellow 95:	
Cuprophenyl Yellow 3GL	
Other Dyes derived from O-Tolidine:	
Diphenyl Green BBN	
Pyrazol Dark Green 3B	
Direct Fast Brown BCW-NB	
Direct Fast Brown BP-NB Conc.	
Direct Brown GG-NB	
Direct Brown US-NB	
Padazoic Yellow G Pdr.	
Padazoic Golden Yellow RLL Pdr.	
Padazoic Orange GR Pdr.	
Pentrating Black AM-NB	
Sandolan Red N-3B	
OTHER DYES CONTAINING BISAZOBIPHENYL MOIETY	
Acid Yellow 42	6375-55-9.
Calcocid Milling Yellow R	
Diamacide Yellow F-RA Conc.	
Xylene Milling Yellow SH	
Acid Red 97	10169-02-5.
Acid Anthracene Red G	
Acid Anthracene Red G Conc.	
Mordant Yellow 26	6232-49-1.
Berachrome Yellow RG	
Acid Red 89	6472-50-0.
Acid Anthracene Red 3B	
Acid Anthracene Red 3B Extra	
Amacid Milling Scarlet 3R Conc.	
Benzorco Milling Red 3BM	
Orcoacid Milling Red RN	
Orco Milling Red 3BM	
Acid Yellow 44	2423-76-7.
Amacid Milling Yellow 5G	
Acid Orange 63	15792-50-4.
Atlantic Fast Yellow PRA	
Sulfan Yellow PR	
Direct Blue 158	6655-95-4.
Cuprofix Blue C-FBL	
Intramet Brilliant Blue 2BL	
Direct Red 89:	
Intralite Scarlet BNLL	
Acid Red 99:	
Amacid Milling Red PRS	
Amacid Milling Red RST	
Milling Red RS 125%	
Orco Milling Red RS 125%	
Acid Red 111	6358-57-2.
Coomassie Scarlet B	
Levanol Fast Scarlet FGN	
Nylomine Scarlet C-3G	
Telon Fast Red GN	
M-Tolidine:	
Atanyl Scarlet FD	
O-Dianisidine/O-Tolidine:	
Direct Blue 3BX Conc.	
PIGMENTS DERIVED FROM DIANISIDINE	
Orange 16	6505-28-8.
Blue 25	10127-03-4
PIGMENTS DERIVED FROM DICHLOROBENZIDINE	
Orange 13	3520-72-7.
Orange 34	15793-73-4.
Yellow 12	6358-85-6.
Yellow 13	5102-83-0.
Yellow 14	5468-75-7.
Yellow 83	5567-15-7.
Chloroacetic anhydride	115-27-5.
Chlorinated benzenes, mono- and di-.	103-90-7, 95-50-1, 541-73-1, 106-46-7.
Chlorinated benzenes, tri-, tetra-, penta- and Hexa-.	87-61-6, 120-82-1, 108-70-3, 634-68-2, 95-94-3, 608-93-5, 634-90-2.
Chlorinated naphthalenes—chlorinated derivatives of naphthalene (empirical formula $C_xH_yCl_z$ where x+y=8).	90-13-1, 1321-65-9, 1321-64-8, etc.
Chlorodifluoromethane	75-45-6.
Chlorophenols—meta-, ortho-, and para-chlorophenol.	108-43-0, 95-57-8, 106-48-9.
Chlorinated paraffins—chlorinated paraffin oils and chlorinated paraffin waxes, with chlorine content of 35 percent through 70 percent by weight.	
Chloromethane (methyl chloride)	74-87-3.
2-Chloro-1,3-butadiene (chloroprene).	126-99-8.
Cresols—ortho, meta, and para-cresol.	95-48-7, 108-39-4, 106-44-5.
Cyclohexanone	108-94-1.
1,2-Dichloroethane	75-34-3.
Dichloromethane. (methylene chloride).	75-09-2.
1,2-Dichloropropane	78-87-5.
Ethylbenzene	100-41-4.
Glycidol and its derivatives	556-52-5, 106-90-1, 106-91-2, 106-92-3, 2426-08-6, 2186-24-5, 122-60-1, 1675-54-3, etc.
Halogenated alkyl epoxides—halogenated noncyclic aliphatic hydrocarbons with one or more epoxy functional groups.	106-89-8, 3132-64-7, etc.
Hexachloro-1,3-butadiene	87-68-3.
Hexachlorocyclopentadiene	77-47-4.
Hydroquinone	123-31-9.
Iodomethane (methyl iodide)	74-88-4.
Isophorone	78-59-1.
Mesityl oxide	191-79-7.
4,4'-Methylenedianiline	101-77-9.
Methyl ethyl ketone	78-93-3.
Methyl isobutyl ketone	108-10-1.
Morpholine	110-91-8.
Nitrobenzene	98-95-3.
Nitrosodiethanolamine	102-71-6.
2-Nitropropane	79-46-9.
Organotin Compounds—compounds of tin containing at least one carbon-tin bond. Examples include, but are not limited to: mono-, di-, and trialkyl tin halides, carboxylates, ethers, etc.; mono-, di-, and triaryl tin halides, carboxylates, etc.; mixed alkyl aryl compounds; aralkyl derivatives; heterocyclic derivatives; tetraalkyl, tetraaryl and analogous tetrasubstituted tin derivatives.	54349-33-6, 25168-24-5, 77-58-7, 56-35-9, 16091-18-2, etc.
Pentachlorophenol	87-86-5.
p-Phenylenediamine	106-50-3.
Polychlorinated dibenzofurans.	
Polychlorinated dibenzo-p-dioxins.	
Polychlorinated terphenyls—polychlorinated ortho-, meta-, and para-terphenyls.	61788-33-8, 12642-23-8, 11126-42-4, etc.
Pyridine	110-86-1.

	CAS Numbers (examples for groups)
Quinone	106-51-4.
Toluene	108-88-3.
Toluene, alpha-chloro	100-44-7.
1,1,1,-Trichloroethane (methyl chloroform).	71-55-6.
2,4,5-Trichlorophenol	95-95-4.
Vinylbenzene (styrene)	100-42-5.
Vinyl fluoride	75-02-5.
Vinylidene fluoride	75-38-7.
Xylenes—ortho-, meta-, and para-xylene.	95-47-6, 108-38-3, 106-42-3.

716.44 [Reserved]

§ 716.15 Requirement to submit copies of studies.

(a)(1) Except as provided in section 716.18, any person who manufactures, processes, or distributes in commerce a chemical substance or mixture must send to EPA copies of any health and safety studies in his possession for each of the chemical substances or mixtures listed in section 716.13,

(i) That were conducted or initiated by or for him, or

(ii) That were conducted or initiated by a person who is not subject to reporting under this section.

(2) Underlying data, such as, medical or health records and daily monitoring records supporting exposure monitoring or epidemiological studies, do not have to be submitted unless requested (see paragraph (c) of this section).

(b) The studies must be accompanied by a cover letter containing the name, title, address, and telephone number of the submitting official, the name and address of the company on whose behalf the submission is made, and an index-list of submitted health and safety studies grouped by chemical substance or mixture and alphabetized by the last name of the senior author. The index-list must also contain the Chemical Abstracts Service (CAS) Registry Number, if known, of each chemical substance studied, including the CAS Registry Number of each intentional component of a mixture.

(c) Persons who submit studies may subsequently be required to submit all or part of any underlying data. In such cases, a letter will be sent to the person by certified mail from the designee of the Assistant Administrator for Toxic Substances, specifying the data to be submitted. Submissions must be postmarked within 30 days[1] of receipt of the letter, unless the letter specifies a longer period.

(d) Copies of health and safety studies and the accompanying index-lists and cover letter must be submitted (preferably by certified mail) to: Document Control Officer, Chemical Information Division, Office of Toxic Substances (TS-793), Environmental Protection Agency, Washington, DC 20460, Attention: 8(d) submission.

[1] The term "days" in this Part refers to calendar days unless otherwise stated.

§ 716.16 Requirement to submit lists of studies.

(a) All persons who presently manufacture, process, or distribute or propose to manufacture, process, or distribute one or more of the chemical substances or mixtures listed in section 716.13 of this Part, except as provided in section 716.18, must send the following to EPA for each of the chemical substances or mixtures listed in section 716.13 which they manufacture, process, or distribute or propose to manufacture, process, or distribute:

(1) A descriptive list of ongoing health and safety studies conducted by or for them, including the purpose of the study, type of data collected, and progress and anticipated date of completion. The list of health and safety studies shall include but not be limited to:

(i) Any health or medical records systems maintained by them on employees exposed or potentially exposed to a particular chemical(s).

(ii) Any studies or record systems, conducted or maintained by or for them, measuring or estimating concentrations of a particular chemical(s) anywhere in the environment, including the workplace.

(iii) Any studies or record systems, conducted or maintained by or for them, measuring or estimating human or environmental exposure to a particular chemical(s) anywhere in the environment, including the workplace;

(2) A copy of the protocol for each listed ongoing study.

(3) A list of health and safety studies, conducted by or for them, submitted to any Federal agency with no claims of confidentiality. The list should include the author, study title, name of the agency to which the study was sent, and any other identifying information with respect to the study.

(4) A list of any unpublished chemical and physical constants known to them.

(5) A list containing the study title and the identity and address of any person known to them to possess unpublished studies.

(b) Submissions under paragraph (a) of this section must be grouped by chemical, including CAS Number if known, and must be accompanied by a cover letter containing the name, job title, address and telephone number of the submitting official, and the name and address of the manufacturing, processing, or distributing establishment on whose behalf the submission is made.

(c) Persons who list studies may subsequently be required to submit all or part of any reports, including preliminary reports or underlying data. In such cases, a letter will be sent by certifying mail from the designee of the Assistant Administrator for Toxic Substances, specifying the data to be submitted. Submissions must be postmarked within 30 days of receipt of the letter, unless the letter specifies a longer period.

(d) The list of health and safety studies should be submitted (preferably by certified mail) to: Document Control Officer, Chemical Information Division, Office of Toxic Substances (TS-793), Environmental Protection Agency, Washington, DC 20460, Attention: 8(d) submission.

§ 716.17 Persons in possesssion of listed studies.

(a) Except as provided in section 716.18, any person who possesses a study that is listed by a person submitting a list according to the requirements of section 716.16 must, if requested by the designee of the Assistant Administrator for Toxic Substances, submit a copy of the study to EPA.

(b) In requiring any person to submit a copy of a study under paragraph (a) of this section, EPA shall notify the person in writing of the requirement.

(1) Such written notification shall include:

(i) A copy of this Part.

(ii) A description of the requested study.

(iii) The name, address, and telephone number of the person to whom the study is to be submitted.

(iv) The date by which the study must be submitted. However, such date shall be no sooner than 30 days after the person's receipt of the notification.

(2) The written notification shall be sent by certified mail.

§ 716.18 Information not subject to mandatory reporting.

Persons subject to this Part may, but are not required to, submit:

(a) Copies or lists of studies or data (such as physical/chemical constants) which have been published in the scientific literature; or

(b) Copies of any studies submitted to any Federal agency with no claims of confidentiality; or

(c) Copies of any studies conducted or initiated by or for another person who is subject to this Part; or

(d) Copies or lists of studies of mixtures containing a very small amount of one or more chemical substances listed in § 716.13, when the study clearly cannot reflect effects of the chemical substance(s).

§ 716.19 Schedule for submission of studies.

(a) Except as provided in paragraphs (b) and (c) of this section, submissions under §§ 716.15 and 716.16 shall be postmarked on or before 60 days after the effective date of the listing of a chemical in section 716.13.

(b) Persons subject to the requirements of section 716.16 must inform EPA of any study initiated within five years after the date the chemical substance or mixture was added to the list in section 716.13. Copies of final reports of studies listed as ongoing under section 716.16(a)(1), or studies initiated within the five-year reporting period, must be submitted within 30 days of the date they are obtained by persons required to report.

(c) Respondents who cannot meet the deadline for submissions required by this Part because of extraordinarily long file searches may apply for an extension of 20 days. Requests for extensions should be addressed to: Deputy Assistant Administrator for Program Integration and Information, Office of Toxic Substances (TS-793), Environmental Protection Agency, Washington, DC 20460.

§ 716.20 Sunset provision.

The reporting requirement on a chemical substance or mixture will terminate within 5 years after that chemical substance or mixture is added to the list in § 716.13. The termination date for the reporting requirement on a chemical substance or mixture will be the annual sunset date (May 1 or November 1) that falls within 5 years after reporting begins (e.g., a reporting requirement taking effect on January 1, 1980 would expire not later than November 1, 1984).

§ 716.21 Confidentiality claims.

(a) Any person submitting a document under this Part may assert a business confidentiality claim covering all or part of the submitted material. Any information covered by a claim will be disclosed by EPA only as provided in procedures set forth at 40 CFR Part 2, as amended on September 8, 1978, 43 FR 39997.

(b) If no claim accompanies a document at the time it is submitted to EPA, the document will be placed in an open file available to the public without further notice to the respondent.

(c)(1) Section 14(b) of TSCA states that EPA may not withhold from disclosure, on the grounds that they are confidential business information, health and safety studies of any substance that has been offered for commercial distribution or for which testing is required under TSCA section 4 or for which notice is required under TSCA section 5, except to the extent that disclosure of data from such studies would reveal:

(i) Processes used in the manufacturing or processing of a chemical substance or mixture, or

(ii) The portion of a mixture comprised by any of the chemical substances in the mixture.

(2) Any respondent who wishes to assert a claim that part of a study should be withheld from disclosure because disclosure would reveal a confidential process or quantitative mixture composition should explicitly explain the basis of the claim and clearly demarcate the material subject to the claim. Information in a study such as company name or address, financial statistics, or product codes used by a company, which is irrelevant to any health or environmental effect of a chemical, may be claimed confidential and not subject to the disclosure requirements of section 14(b) of TSCA.

(d) To assert a claim of confidentiality for data contained in a submitted document, the respondent must submit two copies of the document.

(1) One copy must be complete. In that copy the respondent must indicate what data, if any, are claimed as confidential by marking the specific information on each page with a label such as "confidential", "proprietary", or "trade secret".

(2) If some data are claimed as confidential, the respondent must submit a second copy. The second copy must be complete, except that all information claimed as confidential in the first copy must be deleted.

(3) The first copy will be for internal use by EPA. The second copy will be placed in an open file to be available to the public.

(4) Failure to furnish a second copy when information is claimed as confidential in the first copy will be considered a presumptive waiver of the claim of confidentiality. EPA will notify the respondent by certified mail that a finding of a presumptive waiver of the claim of confidentiality has been made. The respondent will be given 20 days from the date of receipt of notification to submit the required second copy. Failure to submit the second copy will cause EPA to place the first copy in the public file.

[FR Doc. 79-39802 Filed 12-28-79; 8:45 am]
BILLING CODE 6560-01-M

federal register

Monday
December 31, 1979

Part VII

Office of Management and Budget

Budget Deferrals

OFFICE OF MANAGEMENT AND BUDGET

Budget Deferrals

To the Congress of the United States:

In accordance with the Impoundment Control Act of 1974, I herewith report three new deferrals totalling $28.7 million and three revisions to previously transmitted deferrals increasing the amount deferred by $34.5 million. These items affect programs in the Departments of Defense and Treasury, the National Consumer Cooperative Bank, the National Commission on Social Security, and the District of Columbia.

The details of the deferrals are contained in the attached reports.

THE WHITE HOUSE,
December 26, 1979.

BILLING CODE 3110-01-M

CONTENTS OF SPECIAL MESSAGE
(in thousands of dollars)

Deferral No.	Item	Budget Authority
	Department of Defense - Civil:	
	Wildlife Conservation, Military Reservations	
D80-10A	Wildlife conservation, all services.....	709
	Department of the Treasury:	
	Office of the Secretary	
D80-38	Investment in national consumer cooperative bank.....	12,550
	Office of Revenue Sharing	
D80-22A	State and local government fiscal assistance fund.....	113,793
	Other Independent Agencies:	
	District of Columbia	
D80-39	Loans for capital outlay.....	8,130
	National Consumer Cooperative Bank	
D80-40	Self-help development fund.....	8,000
	National Commission on Social Security	
D80-29A	Salaries and expenses.....	395
	Total, deferrals.....	143,577

* *

SUMMARY OF SPECIAL MESSAGES
FOR FY 1980
(in thousands of dollars)

	Rescissions	Deferrals
Third special message:		
New items.....	---	28,680
Change to amounts previously submitted.....	---	34,504
Effect of third special message.....	---	63,184
Previous special messages.....	114	1,529,153
Total amount proposed in special messages.....	114	1,592,337 1/

1/ This amount represents budget authority except for $2,735 thousand in a general revenue sharing deferral of outlays only (D80-23)

D80-10A

SUPPLEMENTARY REPORT

Report Pursuant to Section 1014(c) of Public Law 93-344

This report updates Deferral No. D80-10 transmitted to the Congress on October 1, 1979, and printed as House Document No. 96-198.

This revision to a deferral of Department of Defense wildlife conservation funds increases the amount previously reported as deferred from $595,166 to $708,951. This increase of $113,785 is attributable to an adjustment in unobligated balances brought forward on October 1, 1979. The adjustment was necessary because the actual amount of unobligated balances brought forward was $123,785 higher than had been originally estimated. The remaining $10,000 has been made available for obligation.

Deferral No: D80-10A

DEFERRAL OF BUDGET AUTHORITY
Report Pursuant to Section 1013 of P.L. 93-344

Agency: Department of Defense - Civil	New budget authority (16 U.S.C. 670 f (a)) $ 967,000
Bureau	Other budgetary resources 718,951 *
Appropriation title & symbol: See coverage section below	Total budgetary resources 1,685,951 *
	Amount to be deferred: Part of year $ ____
	Entire year 708,951 *
OMB identification code: See coverage section below	Legal authority (in addition to sec. 1013): [X] Antideficiency Act
Grant program [ ] Yes [X] No	[ ] Other ____
Type of account or fund: [ ] Annual	Type of budget authority: [X] Appropriation
[ ] Multiple-year ____ (expiration date)	[ ] Contract authority
[X] No-year	[ ] Other ____

* Coverage: 1/

Wildlife Conservation, etc., Military Reservations, Army, 21X5095, 21-1500-0-1-303	$535,836
Wildlife Conservation, etc., Military Reservations, Navy, 17X5095, 17-1501-0-1-303	127,522
Wildlife Conservation, etc., Military Reservations, Air Force, 57X5095,57-1502-0-1-303	45,593
	$708,951

Justification:

These are permanent appropriations. The budgetary resources consist of anticipated receipts and unobligated balances generated from hunting and fishing fees collected on military reservations, pursuant to 16 U.S.C. 670. They may be used only in accordance with the purpose of the law--to carry out a program of natural resource conservation.

Since apportionments have been made for all known program requirements, prudent financial management requires the deferral of the balance of the funds, which could not be used effectively during the current year even if made available for obligation. These funds are being deferred under the provisions of the Antideficiency Act (31 U.S.C. 665). Full apportionment is not requested by the Services because (1) installations may be accumulating funds over a period of time to fund a major project, and (2) there is a seasonal relationship between the collection of fees and their subsequent expenditure. Most of the fees are collected during the winter and spring months, while most of the program work is performed during the summer and fall months. This necessitates that funds collected in a prior year be deferred in order to be available to finance the program during the summer and fall months. Additional amounts will be apportioned if program requirements are identified.

Estimated Effects:

This deferral has no programmatic or budgetary effect because the funds would not be obligated if made available.

Outlay Effect:

This deferral action has no effect on outlays.

1/ These accounts were the subject of a similar deferral during fiscal year 1979.

* Revised from previous report.

Deferral No: D80-38

DEFERRAL OF BUDGET AUTHORITY
Report Pursuant to Section 1013 of P.L. 93-344

Agency Department of Treasury	New budget authority (P.L. 96-103) $ 49,050,000
Bureau Office of the Secretary	Other budgetary resources 1,000,000
Appropriation title & symbol	Total budgetary resources 50,050,000
Investment in National Consumer Cooperative Bank 209/01866 1/ 200/11866	Amount to be deferred: Part of year $ ____ Entire year 12,550,000
OMB identification code: 20-1866-0-1-376	Legal authority (in addition to sec. 1013): [X] Antideficiency Act
Grant program ☐ Yes ☒ No	☐ Other ____
Type of account or fund: ☐ Annual ☒ Multiple-year September 30, 1981 (expiration date) ☐ No-year	Type of budget authority: ☒ Appropriation ☐ Contract authority ☐ Other ____

Justification:

These funds were provided by the Department of Housing and Urban Development - Independent Agencies Appropriation Act (P.L. 96-103) for capitalization of the National Consumer Cooperative Bank in FY 1980. Because the bank is beginning operations later than expected, funds totalling $12,550,000 will not be needed for the planned loan program in FY 1980. These funds are deferred for use in FY 1981.

This deferral action is taken in accordance with the Antideficiency Act (31 U.S.C. 665).

Estimated Effect:

This deferral has no programmatic or budgetary effect because the funds would not be obligated if made available.

Outlay Effect:

This deferral action has no effect on outlays.

1/ None of these funds is deferred.

D80-22A

SUPPLEMENTARY REPORT

Report Pursuant to Section 1014(c) of Public Law 93-344

This report revises Deferral No. D80-22 transmitted to the Congress on October 1, 1979, and printed as House Document No. 96-198.

This revision of a deferral for the State and local government fiscal assistance trust fund in the Office of the Secretary of the Treasury increases the amount previously reported as deferred from $79,547,717 to $113,792,911. This increase of $34,245,194 results from withholding from obligation one-half of one percent of the amounts appropriated to the trust fund by the Department of Housing and Urban Development and Independent Agencies Appropriation Act, 1980 (P.L. 96-103).

Deferral No: D80-22A

DEFERRAL OF BUDGET AUTHORITY
Report Pursuant to Section 1013 of P.L. 93-344

Agency Department of the Treasury	New budget authority (P.L. 96-103) $ 6,854,924,000*
Bureau Office of Revenue Sharing	Other budgetary resources 79,543,660*
Appropriation title & symbol State and Local Government Fiscal Assistance Trust Fund 20X8111 1/	Total budgetary resources 6,934,467,660*
	Amount to be deferred: Part of year $ 2,500,000 Entire year 111,292,911*
OMB identification code: 20-8111-0-7-851	Legal authority (in addition to sec. 1013): [X] Antideficiency Act
Grant program [X] Yes [ ] No	[X] Other P.L. 92-512, P.L. 94-488(Sec. 6)
Type of account or fund: [ ] Annual [ ] Multiple-year _____ (expiration date) [X] No-year	Type of budget authority: [X] Appropriation [ ] Contract authority [ ] Other _____

Justification:*

The Secretary of the Treasury must hold in reserve an amount to meet additional valid claims to prior entitlement periods from State and local governments for general revenue sharing payments. Because the total amount appropriated for all governments is fixed, the alternative to such a reserve is recurring recomputations of entitlements of 39,170 governments for prior entitlement periods. Accordingly, the Office of Revenue Sharing withheld from obligation: 1) one percent of the amounts appropriated for each entitlement period through FY 1975; and 2) one-half of one percent of the $4,988 million appropriated for general revenue sharing in the Economic Stimulus Appropriations Act, 1977 (P.L. 95-29), and the HUD-Independent Agencies Appropriation Acts of 1978 and 1980 (P.L. 95-119 and P.L. 96-103, respectively).

This cumulative unobligated reserve is available to the Secretary of the Treasury to satisfy legitimate claims against the Trust Fund for prior entitlement periods. The unobligated amount of $113.8 million retained in the Trust Fund will be further reduced whenever the Secretary determines the amount is adequate to meet foreseeable liabilities against the Trust Fund. The reduction will be made by paying the additional amount to recipients as part of a regular distribution.

Estimated Effect:

This action will postpone distribution of the amount of the reserve until necessary adjustments and corrections have been identified. It will also avoid substantial confusion and complexities in the administration of the program.

Outlay Effect:

This deferral has the effect of shifting $111.3 million in estimated outlays into FY 1981 ($56 million) and FY 1982 ($55.3 million).

1/ This account is currently the subject of another deferral and was the subject of a similar deferral during FY 1979.

* Revised from previous report.

Deferral No: D80-39

DEFERRAL OF BUDGET AUTHORITY

Report Pursuant to Section 1013 of P.L. 93-344

Agency: District of Columbia	New budget authority (P.L. 96-93): $ 125,000,000
Bureau:	Other budgetary resources: 28,402,500
Appropriation title & symbol: Loans to the District of Columbia for Capital Outlay 20X0137	Total budgetary resources: 153,402,500
	Amount to be deferred: Part of year: $ ____ Entire year: 8,129,700
OMB identification code: 20-0137-0-1-852	Legal authority (in addition to sec. 1013): [X] Antideficiency Act [ ] Other ____
Grant program: [ ] Yes [X] No	
Type of account or fund: [ ] Annual [ ] Multiple-year ____ (expiration date) [X] No-year	Type of budget authority: [X] Appropriation [ ] Contract authority [ ] Other ____

Justification

Public Law 96-93, the District of Columbia Appropriation Act, 1980, provided $125.0 million, without fiscal year limitation, for the District's capital development program. In addition, $28.4 million is available to the program from prior years. Under current plans, an estimated $145.3 million will be obligated in FY 1980. The remaining $8.1 million is deferred for use in FY 1981.

This deferral is consistent with the congressional intent to provide no-year funding for this program and is taken under the provisions of the Antideficiency Act (31 U.S.C. 665).

Estimated Effects

This deferral has no programmatic or budgetary effect because the funds would not be obligated if made available.

Outlays Effects

This deferral action has no effect on outlays.

Deferral No: D80-40

DEFERRAL OF BUDGET AUTHORITY

Report Pursuant to Section 1013 of P.L. 93-344

Agency: National Consumer Cooperative Bank	New budget authority (P.L. 96-103): $ 17,000,000
Bureau:	Other budgetary resources: 1,000,000
Appropriation title & symbol: Self-Help Development Fund 289/00201 1/ 289/10201	Total budgetary resources: 18,000,000
	Amount to be deferred: Part of year: $ ____ Entire year: 8,000,000
OMB identification code: 28-0201-0-1-376	Legal authority (in addition to sec. 1013): [X] Antideficiency Act [ ] Other ____
Grant program: [ ] Yes [X] No	
Type of account or fund: [ ] Annual [X] Multiple-year 9/30/80 1/ and 9/30/81 (expiration date) [ ] No-year	Type of budget authority: [X] Appropriation [ ] Contract authority [ ] Other ____

Justification:

These funds were provided by the Department of Housing and Urban Development - Independent Agencies Appropriation Act, 1980 (P.L. 96-103) for capitalization of the Self-Help Development Fund. Because the Bank is beginning operations later than expected, none of the funds from the Self-Help Fund are expected to be committed during the first half of 1980. The deferral of $8 million to fiscal year 1981 reflects this later-than-expected start.

This deferral action is taken in accordance with the Antideficiency Act (31 U.S.C. 665).

Estimated Effect:

This deferral has no programmatic or budgetary effect because the funds would not be obligated if made available.

Outlay Effect:

This deferral action has no effect on outlays.

1/ None of these funds is deferred.

D80-29A

SUPPLEMENTARY REPORT

Report Pursuant to Section 1014(c) of Public Law 93-344.

This report revises Deferral No. D80-29 transmitted to the Congress on October 1, 1979, and printed as House Document No. 96-198.

This revision to a deferral for the National Commission on Social Security increases the amount previously reported as deferred from $250,000 to $395,073. This increase of $145,073 is attributable to an adjustment in unobligated balances brought forward on October 1, 1979. The adjustment was necessary because the actual amount of unobligated balances brought forward was $145,073 higher than had been originally estimated.

Deferral No: D80-29A

DEFERRAL OF BUDGET AUTHORITY
Report Pursuant to Section 1013 of P.L. 93-344

Agency National Commission on Social Security	New budget authority $ _____ (P.L. _____)
Bureau	Other budgetary resources 2,088,073 *
Appropriation title & symbol	Total budgetary resources 2,088,073 *
Salaries and Expenses 1/	Amount to be deferred: Part of year $ _____
489/1600 48X1600	Entire year 395,073 *
OMB identification code: 48-1600-0-1-601	Legal authority (in addition to sec. 1013): [X] Antideficiency Act
Grant program [ ] Yes [X] No	[ ] Other _____
Type of account or fund: [ ] Annual	Type of budget authority: [X] Appropriation
[X] Multiple-year September 30, 1981 (expiration date)	[ ] Contract authority
[X] No-year	[ ] Other _____

Justification: *

The National Commission on Social Security, a temporary commission, was established by P.L. 95-216 to study, investigate, and review the cash benefits and health insurance programs authorized by Titles II and XVIII of the Social Security Act. Initially, $500,000 was provided in P.L. 95-480 for initial costs, with an additional $2.0 million provided in the Supplemental Appropriations Act, 1979 (P.L. 96-38), for continued operations.

Funds totalling $395,073 are deferred to assure prudent financial management. None of these funds could be used effectively or efficiently during FY 1980.

This deferral action is taken in accordance with the Antideficiency Act (31 U.S.C. 665), and is in accord with congressional intent to provide funding for the full two-year life of the Commission.

Estimated Effect:

This deferral has no programmatic or budgetary effect because the funds would not be obligated if made available.

Outlay Effect:

This deferral action has no effect on outlays.

1/ This account was the subject of a similar deferral during FY 1979

* Revised from previous report.

[FR Doc. 79-39838 Filed 12-28-79; 8:45 am]
BILLING CODE 3110-01-C

federal register

Monday
December 31, 1979

Part VIII

Department of Housing and Urban Development

Office of Assistant Secretary for Housing—Federal Housing Commissioner

Section 202 Loans For Housing For the Elderly or Handicapped; Announcement of Fund Availability Fiscal Year 1980

DEPARTMENT OF HOUSING AND URBAN DEVELOPMENT

Office of Assistant Secretary for Housing—Federal Housing Commissioner

[Docket No. N-79-968]

Section 202 Loans for Housing for the Elderly or Handicapped; Announcement of Fund Availability Fiscal Year 1980

AGENCY: Office of the Assistant Secretary for Housing—Federal Housing Commissioner, Department of Housing and Urban Development (HUD).

ACTION: Notice.

SUMMARY: HUD is announcing the availability of Fiscal Year 1980 loan authority under the Section 202 Housing for the Elderly or Handicapped Direct Loan Program. The loan authority will be used to provide direct Federal loans for a maximum term of 40 years under Section 202 of the Housing Act of 1959, as amended, to assist private nonprofit corporations and consumer cooperatives in the development of new or substantially rehabilitated housing and related facilities to serve the elderly or handicapped.

FOR FURTHER INFORMATION CONTACT: The HUD Field Office for your jurisdiction.

SUPPLEMENTARY INFORMATION: Notice is hereby given pursuant to Title 24, Code of Federal Regulations, Part 885, as amended on March 1, 1978 (43 FR 8491), that the Department of Housing and Urban Development will be accepting Applications for Fund Reservations from eligible Borrowers (see Section 885.5 for the definition of "Borrower" and other terms used herein) for the provision of direct loans for the construction or substantial rehabilitation of Housing and Related Facilities (as defined) for dwelling use by Elderly or Handicapped Families (as defined) under the provisions of Section 202 of the Housing Act of 1959, as amended.

The Assistant Secretary for Housing is assigning Section 202 loan fund authority for Fiscal Year 1980 to the HUD Field Offices identified below in conformance with the provisions of Section 213(d) of the Housing and Community Development Act of 1974, as amended, as provided at 24 CFR Part 891, Subpart D.

While the precise number of units to be funded depends upon actual approvable applications received, the following distribution plan shows the approximate numbers of units and loan authority available for new applications in each Field Office jurisdiction for Fiscal Year 1980.

BILLING CODE 4210-01-M

Fiscal Year 1980 Section 202

Distribution Plan By HUD Field Office

Jurisdiction

	Estimated Number of Units	Estimated Loan Authority*
Boston Regional Office:		
Boston	410	$17,620,000
Manchester (Bangor, Burlington)	175	7,229,000
Providence	80	3,207,000
Hartford	210	9,067,000
Total	875	$37,123,000
New York Regional Office:		
Buffalo (Albany)	500	$17,947,000
Caribbean	540	16,341,000
Newark (Camden)	600	24,452,000
New York	1190	58,463,000
Total	2830	$117,203,000

Fiscal Year 1980 Section 202

Distribution Plan By HUD Field Office

Jurisdiction

	Estimated Number of Units	Estimated Loan Authority*
Philadelphia Regional Office:		
Baltimore	145	$ 5,407,000
Philadelphia (Wilmington)	690	25,245,000
Pittsburgh	360	14,246,000
Charleston	145	5,737,000
Richmond	240	7,631,000
Washington, D.C.	105	4,482,000
Total	1685	$62,748,000
Atlanta Regional Office:		
Atlanta	340	$11,057,000
Birmingham	330	10,373,000
Columbia	175	5,308,000
Greensboro	455	11,953,000
Jackson	195	6,305,000
Jacksonville (Coral Gables, Tampa)	885	31,147,000
Knoxville	145	4,301,000
Nashville (Memphis)	190	6,453,000
Louisville	285	9,398,000
Total	3000	$96,295,000

Fiscal Year 1980 Section 202

Distribution Plan By HUD Field Office

Jurisdiction

	Estimated Number of Units	Estimated Loan Authority*
Chicago Regional Office:		
Chicago (Springfield)	890	$36,991,000
Columbus (Cincinnati)	255	9,746,000
Cleveland	255	9,605,000
Detroit	370	15,315,000
Grand Rapids	220	7,984,000
Indianapolis	395	14,747,000
Milwaukee	390	13,418,000
Minn.-St. Paul	500	19,766,000
Total	3275	$127,572,000
Dallas Regional Office:		
Dallas (Albuquerque, Fort Worth, Lubbock)	660	$19,351,000
Little Rock	240	7,666,000
New Orleans (Shreveport)	280	10,908,000
Oklahoma City (Tulsa)	240	7,051,000
Houston	295	9,033,000
San Antonio	270	8,111,000
Total	1985	$62,120,000

Fiscal Year 1980 Section 202

Distribution Plan By HUD Field Office

Jurisdiction

	Estimated Number of Units	Estimated Loan Authority*
Kansas City Regional Office:		
Kansas City (Topeka)	375	$13,426,000
Omaha	150	4,885,000
Des Moines	290	9,722,000
St. Louis	210	8,778,000
Total	1025	$36,811,000
Denver Regional Office:		
Denver (Helena, Fargo, Sioux Falls, Salt Lake City, Casper)	335	$12,542,000
Total	335	$12,542,000
San Francisco Regional Office:		
Honolulu	20	$ 999,000
Los Angeles (Phoenix, San Diego, Santa Ana)	1335	56,831,000
San Francisco (Fresno, Reno, Las Vegas)	640	28,195,000
Sacramento	140	5,652,000
Total	2135	$91,677,000

Fiscal Year 1980 Section 202

Distribution Plan By HUD Field Office

Jurisdiction

	Estimated Number of Units	Estimated Loan Authority*
Seattle Regional Office:		
Portland (Boise)	255	$ 9,676,000
Seattle (Spokane)	235	10,233,000
Total	490	$19,909,000

*Pursuant to Section 213(d) of the Housing and Community Development Act of 1974, as amended, the estimated loan authority is subject to further breakdown into "metropolitan" and "nonmetropolitan" areas.

BILLING CODE 4210-01-C

The distribution plan set forth above is provided as a guide for prospective Borrowers. It indicates the estimated loan authority that can be expected to be made available for applications for units in each HUD Field Office jurisdiction. However, these unit and loan estimates are subject to change upon Regional and/or Field Office determinations. Such changes may be necessary in order to assure that there is enough loan authority in each Field Office to support feasible size housing projects. Each HUD Field Office receiving Fiscal Year 1980 loan authority will prepare and publish a single Invitation for Applications for Section 202 Fund Reservation (Invitation) for its jurisdiction which indicates the amount of such authority and the maximum number of units this amount is expected to assist. The Invitation will designate those allocation areas where Section 202 projects are consistent with the Field Office allocation plan.

Limitations on Fund Availability to Certain Areas

Prospective Borrowers interested in appyling should be aware of the requirements governing the allocation of loan authority as set forth in Section 885.200 of the Regulations. In determining the number of units for housing for the elderly or handicapped to be provided to a specific allocation area, each Field Office will allocate the Section 202 "fair share" assignment consistent with the housing allocation plan.[1] Because of previous years' program selections, in many allocation areas a greater proportion of newly constructed housing for the elderly has been provided than would otherwise have occurred, and as a result it may not be possible to approve Section 202 applications in such areas. The Field Office Invitation will clearly indicate the allocation areas designated for priority evaluation of Section 202 applications. Pursuant to § 885.205c (2) and (3) of the Regulations, Borrowers may submit applications in areas not so designated by the Field Office Invitations under the following conditions:

(a) Applications for projects in any allocation area which are designated wholly for the nonelderly disabled or handicapped will be accepted and evaluated;

(b) All other applications from the designated allocation areas will be evaluated concurrently with those described in (a) above and applications for projects not designated in the Invitation will be considered for approval only if insufficient number of approvable applications are received for projects in the designated allocation areas and if the proposal is consistent with the HAP, or in the case of areas not having HAPs is consistent with the Field Office's determination of housing needs.

As mentioned above, interested Section 202 Borrowers will be notified of the designated allocation areas by an Invitation prepared and advertised by the HUD Field Office. Because of the exceptions set forth above, any eligible Borrower may apply for areas outside the designated allocation areas established by the Field Office. As it is anticipated that demand from acceptable Borrowers from designated allocation areas may be in excess of available loan authority, prospective applicants from other areas should recognize that their prospects for selection might be very limited.

Schedule for Section 202 Invitations, Workshops, and Application Deadline

All Applications for Section 202 Fund Reservations by eligible Borrowers must be filed with the appropriate HUD Field Office and must contain all exhibits and additional information as required by Section 885.210 of the Regulations. HUD Field Offices will publish an Invitation in newspapers of general circulation and in minority newspapers where available serving the Field Office jurisdiction once a week for two consecutive weeks commencing no earlier than December 17, 1979, but no later than January 15, 1980. Field Offices will accept applications anytime after publication of the Invitation, but no applications will be accepted after the regular closing time of the appropriate Field Office on Monday, March 31, 1980, unless said final date for submission of applications is extended by the Assistant Secretary for Housing by publication of an extension notice in the Federal Register.

Borrowers interested in applying for a Fund Reservation under Section 202 are encouraged to provide the appropriate Field Office with the name, address and telephone number of the Sponsor and/or Borrower organization(s), to advise the Field Office whether they wish to attend the workshop described in the following paragraph, and to secure the program handbook and Application Package. Minority organizations are also encouraged to participate in this program as Sponsors and/or Borrowers.

Workshops will be conducted by Field Offices during the months of January and February 1980 to explain the regulations and instructions governing the Section 202 and Section 106(b) Seed Money loan progams, to distribute Application Packages, and to discuss the application procedures and required exhibits. More detailed information covering the time and place of the particular workshops will be indicated in the Field Office Invitation. Arrangements will be made by the Field Office, if necessary, to assure that any interested handicapped persons are able to attend and participate in the workshop. Such persons should contact the Field Office, so that appropriate arrangements can be made.

Additional Information

Pursuant to Section 885.205(a)(4), this is to serve further notice that:

(1) Religious bodies may serve as sponsors of Section 202 projects, but the Borrower corporation must be a separate legal entity in order to comply with Constitutional requirements for separation of Church and State. No religious purpose may be included in the Articles of Incorporation or By-laws, etc., of the Borrower corporation.

(2) The Sponsor must have a current exemption ruling from the Internal Revenue Service, and where the Sponsor and Borrower are not the same, the Borrower corporation must have applied for an exemption ruling from the Internal Revenue Service prior to the deadline date for filing applications (i.e., March 31, 1980).

(3) Applications may be submitted only by eligible Borrowers. The Borrower must be an eligible corporation as defined in Section 885.5 of the Section 202 Regulations and must have been legally incorporated at the time its application is filed with the appropriate HUD Field Office.

(4) The Department is in the process of issuing a proposed rule to amend the definition of Borrower contained in Section 885.5 to implement the requirements of Section 202(d)(3) of the Housing Act of 1959, as amended by the Housing and Community Development Amendments of 1978 that there be significant representation of the views of the community in which the project is located in the composition of the Borrower's governing board. Under the proposed regulation, this requirement shall be deemed to have been met if at least thirty percent (30%) of the members of the Board of Directors reside in the community in which the project is to be located and may not be representatives of any national organization serving as the sponsor of

[1] To the maximum extent practicable, the number of units in the allocation plan shall be proportionate by housing type and household type to the approved Annual Housing Action Programs (which reflect the locality increments to achieve 3-year HAP goals), housing needs for non-HAP localities and goals for AHOPs approved pursuant to Section 891, Subpart E.

the project. Although this amendment will not become effective until a final rule is published in the Federal Register, interested applicants may want to keep this in mind when establishing their Borrower corporations.

(5) No single Borrower may submit an application or applications in any HUD Region in excess of that necessary to finance the construction or substantial rehabilitation of three hundred (300) units of Housing and Related Facilities.

(6) HUD will make contract authority under Section 8 of the United States Housing Act of 1937, as amended, available for successful Borrowers.

(7) Section 202 Fund Reservations will be distributed among successful Borrowers in accordance with the requirements of Section 885.220 (Review of Application for Fund Reservation) and on the basis of all of the information furnished by the Borrowers as set forth in the Application Package and pursuant to Section 885.225 (Approval of Applications) of the Regulations.

(8) Applicants which submitted applications which were not funded due to insufficient Fiscal Year 1979 Section 202 loan authority will have to reapply under this year's Field Office Invitations.

(3) The Assistant Secretary for Housing has established one-half of 1 percent (0.5%), not to exceed $10,000 of the total HUD-approved Section 202 mortgage amount, to be the minimum capital investment for Section 202 Borrowers. This requirement applies to all Section 202 Borrowers receiving HUD Field Office approval of an application for a Section 202 fund reservation (under the provisions of Section 885.400 et seq.). Said minimum capital investment shall apply to all Section 202 projects receiving fund reservations in Fiscal Year 1980 and shall remain in effect unless altered by the Assistant Secretary for Housing by publishing in the Federal Register a revision to the minimum capital investment requirement. Section 106(b) funds, pursuant to Part 271, may not be used to satisfy the minimum capital investment requirement.

Borrowers are invited to submit applications for Section 202 fund reservations in accordance with this Announcement and Part 885. Additional information regarding the Section 202 program may be found in Part 885.

Authority: (Section 202, Housing Act of 1959 (12 U.S.C. 1701q), as amended; Section 7(d), Department of Housing and Urban Development Act (42 U.S.C. 3535(d)))

Issued at Washington, D.C., on December 21, 1979.

Lawrence B. Simons,

Assistant Secretary for Housing—Federal Housing Commissioner.

[FR Doc. 79-39359 Filed 12-28-79; 11:24 am]

BILLING CODE 4210-01-M

Reader Aids

Federal Register
Vol. 44, No. 251
Monday, December 31, 1979

INFORMATION AND ASSISTANCE

Questions and requests for specific information may be directed to the following numbers. General inquiries may be made by dialing 202-523-5240.

Federal Register, Daily Issue:

202-783-3238	Subscription orders (GPO)
202-275-3054	Subscription problems (GPO)
	"Dial-a-Reg" (recorded summary of highlighted documents appearing in next day's issue):
202-523-5022	Washington, D.C.
312-663-0884	Chicago, Ill.
213-688-6694	Los Angeles, Calif.
202-523-3187	Scheduling of documents for publication
523-5240	Photo copies of documents appearing in the Federal Register
523-5237	Corrections
523-5215	Public Inspection Desk
523-5227	Index and Finding Aids
523-5235	Public Briefings: "How To Use the Federal Register."

Code of Federal Regulations (CFR):

523-3419	
523-3517	
523-5227	Index and Finding Aids

Presidential Documents:

523-5233	Executive Orders and Proclamations
523-5235	Public Papers of the Presidents, and Weekly Compilation of Presidential Documents

Public Laws:

523-5266	Public Law Numbers and Dates, Slip Laws, U.S.
-5282	Statutes at Large, and Index
275-3030	Slip Law Orders (GPO)

Other Publications and Services:

523-5239	TTY for the Deaf
523-5230	U.S. Government Manual
523-3408	Automation
523-4534	Special Projects
523-3517	Privacy Act Compilation

FEDERAL REGISTER PAGES AND DATES, DECEMBER

69271-69608 3
69609-69916 4
69917-70114 5
70115-70448 6
70449-70700 7
70701-71398 10
71399-71804 11
71805-72068 12
72069-72568 13
72569-73000 14
73001-74780 17
74781-75090 18
75091-75354 19
75355-75614 20
75615-76262 21
76263-76476 26
76477-76746 27
76747-77124 28
77125-77498 31

CFR PARTS AFFECTED DURING DECEMBER

At the end of each month, the Office of the Federal Register publishes separately a list of CFR Sections Affected (LSA), which lists parts and sections affected by documents published since the revision date of each title.

1 CFR

445 77127
480 74791
490 75392

3 CFR

Administrative Orders:
Memorandums:
December 11, 1979 71809
December 14, 1979 74781
Executive Orders:
11223 (Amended by EO 12178) 71807
11322 (Revoked by EO 12183) 74787
11419 (Revoked by EO 12183) 74787
11888 (Amended by EO 12180, 12181) 72077, 72083
11978 (Revoked by EO 12183) 74787
12103 (Amended by EO 12176) 70705
12153 (Amended by EO 12186) 76477
12173 69271
12174 69609
12175 70703
12176 70705
12177 71805
12178 71807
12179 71811
12180 72077
12181 72083
12182 74785
12183 74787
12184 75091
12185 75093
12186 76477
Proclamations:
4705 70701
4706 71399
4707 72348
4708 72069
4709 74789
Reorganization Plans:
No. 3 of 1979 69273
Presidential Determinations:
No. 80-8 of December 18, 1979 77125

4 CFR

6 70115
420 73001

5 CFR

Ch. I 76747
212 75615
213 ..... 69611, 70449, 72569, 75615, 77127
214 75615
315 72569
317 75615
737 72570
771 77127
831 76748
870 76748
871 ..... 70449, 76748
890 76748
891 76748
1250 75914
1251 75914
1252 75914
1253 75914
1254 75914
1255 75914
1256 75914
1257 75914
1258 75914
1259 75914
1260 75914
1261 75914
1262 75914
1263 75914
1264 75914
1265 75914
1266 75914
1267 75914
1268 75914
1269 75914
Proposed Rules:
Ch. I 69651
213 70483
351 76799
733 76799

6 CFR

701 73001
702 70086
703 70086
704 70086
705 ..... 72085, 73001-73003, 76479, 76748
706 ..... 72085, 73001, 73003
707 ..... 72085, 73003, 73004

7 CFR

Subtitle A 70450
6 75594
16 75355
68 73007
227 70451
230 71401
272 75617
273 ..... 72570, 75618
354 74791
401 ..... 75356, 75363, 76263, 77132
402 71813
403 74792
404 74792
406 74793

408 ... 71813
409 ... 71814
410 ... 74794
411 ... 74795
413 ... 74796
414 ... 74796
415 ... 71815
416 ... 72089
417 ... 72089
418 ... 72090
419 ... 72093
420 ... 75370
421 ... 75371
423 ... 70115
424 ... 75372
425 ... 75372
427 ... 75373
428 ... 75373
430 ... 72094
431 ... 75374
432 ... 75375
433 ... 75376
434 ... 75356
435 ... 75095
436 ... 75363
729 ... 70452
905 ... 69917, 69918, 72095, 73008, 74797
906 ... 73008, 75102, 76749
907 ... 75376, 75377, 76480, 77133
908 ... 73008
909 ... 73008
910 ... 69918, 70454, 72572, 73008, 75618, 76750
911 ... 73008
912 ... 69918, 73008
913 ... 69918, 73008
915 ... 73008
916 ... 73008
917 ... 73008
918 ... 73008
919 ... 73008
921 ... 73008
922 ... 73008
923 ... 73008
924 ... 73008
926 ... 73008
927 ... 73008
928 ... 71401, 73008, 77134
929 ... 73008
930 ... 73008
931 ... 73008
932 ... 73008
944 ... 73008, 76749
945 ... 73008
946 ... 73008
947 ... 73008
948 ... 73008
950 ... 73008
953 ... 73008
958 ... 73008
959 ... 73008
965 ... 73008
966 ... 73008
967 ... 73008
971 ... 73008
979 ... 73008, 76480
982 ... 70116
987 ... 69919
989 ... 70117
1004 ... 77135
1049 ... 71402
1133 ... 75619
1260 ... 71404
1280 ... 72866, 72884, 72888
1421 ... 74798
1427 ... 74797
1435 ... 69611
1464 ... 69277, 69278
1701 ... 71405, 74799
1888 ... 76263
1945 ... 75104
1951 ... 75132
1980 ... 75104
2852 ... 69613, 72572

Proposed Rules:

Ch. VI ... 76299
Ch. XXVIII ... 75990
20 ... 74842
210 ... 75648
273 ... 70684, 75648
700 ... 76202
723 ... 71424
724 ... 74843
726 ... 69655
906 ... 69303
928 ... 70176
944 ... 69303
1004 ... 70483
1124 ... 75649
1133 ... 76543
1135 ... 76551
1260 ... 72838
1421 ... 69656, 71838
1426 ... 69656, 69657
1430 ... 75650
1438 ... 71839
1446 ... 71838
1802 ... 69937
1900 ... 77183
1930 ... 69937
1960 ... 71839
1980 ... 70741
2851 ... 72599
2900 ... 77187

8 CFR

214 ... 75165

9 CFR

75 ... 75620
78 ... 72574, 76751
92 ... 72574
112 ... 71406, 71407
113 ... 71407
201 ... 69279
202 ... 72575

Proposed Rules:

Ch. III ... 75990
113 ... 71425
201 ... 71802
203 ... 71802
307 ... 69659
319 ... 71427
381 ... 69659

10 CFR

71 ... 77135
205 ... 72096
210 ... 70118
211 ... 70118, 72575
212 ... 69594, 70118, 70121, 72566, 77118
271 ... 69594
430 ... 76700
515 ... 69919
790 ... 75078

Proposed Rules:

2 ... 70408
19 ... 70408
20 ... 70408
21 ... 70408
30 ... 70408
40 ... 70408
50 ... 75167, 75651, 75652
51 ... 70408, 75652
60 ... 70408
70 ... 70408
211 ... 69664, 69962
212 ... 69599, 69602, 69664
376 ... 70390
390 ... 70390
430 ... 72276
456 ... 75956
477 ... 74844
570 ... 70799, 71842, 75174
576 ... 70692

11 CFR

100 ... 76734
107 ... 77136, 77137
110 ... 76734
114 ... 76734, 77136, 77137
120 ... 77137
121 ... 77137
122 ... 77137
123 ... 77137
124 ... 77137
125 ... 77137
9008 ... 77136, 77137

12 CFR

Ch. VII ... 74799
1 ... 76263
11 ... 69614
12 ... 77137
208 ... 76481
211 ... 70708
217 ... 75621
226 ... 77139
301 ... 75623
303 ... 73012, 75624
304 ... 73012, 74801, 75624
305 ... 75623
306 ... 75623
325 ... 75623
329 ... 75378
330 ... 75623
335 ... 76754
349 ... 74801
523 ... 76754
526 ... 75625
545 ... 72578
563 ... 72578, 76756, 76757
701 ... 75379

Proposed Rules:

Ch. II ... 75393
Ch. VIII ... 75180
206 ... 76551
210 ... 75174
211 ... 72181
225 ... 69629
226 ... 69630
265 ... 70708
309 ... 75652
335 ... 76800
339 ... 75654
545 ... 72602
563 ... 72602
613 ... 69631
614 ... 69631
616 ... 69631
708 ... 71816
720 ... 70709

13 CFR

101 ... 76757
108 ... 72102
118 ... 72102
120 ... 70455
121 ... 72582
122 ... 70455, 72102

Proposed Rules:

111 ... 72604
121 ... 75183
122 ... 75655

14 CFR

39 ... 75380, 76264–76267
71 ... 75381, 76268–76270
73 ... 70714, 72106
75 ... 70715
91 ... 75558
95 ... 76270
97 ... 73015
109 ... 72344
191 ... 72344
207 ... 69640
208 ... 69640
211 ... 69640
212 ... 69641
215 ... 69641
270 ... 76767
296 ... 69641
297 ... 69633
302 ... 76771, 76772
379 ... 74807
385 ... 69642, 76772
399 ... 69915
1209 ... 69935
1216 ... 69920

Proposed Rules:

Ch. I ... 70177
39 ... 75394, 76561
71 ... 70181, 70742, 72182, 72183, 73110–73114, 76562
73 ... 72183
91 ... 70743
241 ... 69968, 77189
380 ... 69912
1214 ... 75395, 75656

15 CFR

Ch. III ... 77182
4b ... 76660
11 ... 75382
368 ... 75382
370 ... 75382
385 ... 75382
386 ... 75382
918 ... 75054

Proposed Rules:

7a ... 76810
7b ... 76810
7c ... 76810
369 ... 69665
377 ... 69968
935 ... 69970
2303 ... 70743

16 CFR

5 ... 69284
13 ... 70125, 70126, 70716, 77149, 71408
305 ... 75133
306 ... 69920
438 ... 70456
460 ... 73017
600 ... 70457
1000 ... 77150

1205 ... 70127, 70380
1500 ... 71411
Proposed Rules:
Ch. I ... 75990
Ch. II ... 73121
13 ... 70484, 74845
457 ... 70485
1015 ... 77196

17 CFR

1 ... 71817
140 ... 72107
155 ... 71820
200 ... 70457, 76773
201 ... 75382
230 ... 70326
231 ... 70130, 74808
239 ... 70131
240 ... 70132, 70326, 71821, 72583, 75133, 76774, 76777
241 ... 74808
249 ... 70132
Proposed Rules:
Ch. I ... 69304
229 ... 75399
230 ... 70349
231 ... 72604
239 ... 75399
240 ... 75399
241 ... 70189, 72604
249 ... 75399

18 CFR

1 ... 69284, 77155
2 ... 69935, 71821, 75383, 76482
4 ... 75383
271 ... 69642, 69935, 76482, 76778
274 ... 69642, 76778
284 ... 75383
701 ... 72583
707 ... 69921
713 ... 72892
Proposed Rules:
Ch. I ... 70752
35 ... 70752
46 ... 71428
271 ... 70189
280 ... 73121
282 ... 77198
284 ... 73121
292 ... 69978

19 CFR

4 ... 70458
159 ... 70138, 75135
171 ... 70459
201 ... 76458
207 ... 76458
Proposed Rules:
4 ... 75685
6 ... 73122
144 ... 75685
151 ... 75685
159 ... 75685

20 CFR

404 ... 73018
676 ... 72584
Proposed Rules:
Ch. III ... 72728

21 CFR

Ch. I ... 72585
5 ... 75626
10 ... 70459
12 ... 70459
13 ... 70459
14 ... 70459
15 ... 70459
16 ... 70459
176 ... 75627
177 ... 74816
178 ... 69649
201 ... 74817
202 ... 74817
510 ... 71412, 74818, 76779
520 ... 71412, 72586, 74818
522 ... 71412, 76780
526 ... 71412
529 ... 72587
548 ... 69650
558 ... 71412, 74819, 76779
701 ... 75627
820 ... 75627
1000 ... 71728
1308 ... 71822
Proposed Rules:
Ch. I ... 71428, 72728, 75990
25 ... 71742
58 ... 69666
70 ... 75659
131 ... 69668, 69669, 72613
170 ... 75662
182 ... 74845
184 ... 74845
320 ... 69669
333 ... 71428
357 ... 75666
438 ... 69768
452 ... 69670
660 ... 76811
868 ... 69673, 70486

22 CFR

42 ... 72108

23 CFR

170 ... 75552
172 ... 75552
420 ... 75552
620 ... 75552
650 ... 72109
713 ... 73018
Proposed Rules:
630 ... 70191
656 ... 70753
657 ... 69586
1251 ... 70192

24 CFR

Subtitle A ... 76563
Subtitle B ... 76563
201 ... 70716
207 ... 70716
300 ... 71412
570 ... 70717, 76562
571 ... 75136
600 ... 72036
881 ... 76562
886 ... 70362
888 ... 75383
Proposed Rules:
115 ... 72185
203 ... 72186
204 ... 72186
234 ... 70194
390 ... 69977, 75348
570 ... 69673
571 ... 69304, 75332
803 ... 70194, 76024
888 ... 70194, 76024
3282 ... 70195, 76176

25 CFR

31a ... 70139
31b ... 70139
31g ... 70139
31h ... 70139
112a ... 70139

26 CFR

1 ... 73019, 76781
5B ... 77155
31 ... 75137, 76483
48 ... 69924
140 ... 76484
601 ... 72113
Proposed Rules:
1 ... 71429, 71430, 75183, 75670, 76303, 76813, 76815, 6817, 76824
5 ... 76817
7 ... 71429
16 ... 75670, 76303, 76824
17 ... 75670, 76303, 76824
20 ... 71436
25 ... 75185
31 ... 71430
36 ... 71430
46 ... 71430
48 ... 71430, 76563
49 ... 71430
140 ... 76563
154 ... 71430
160 ... 75670, 76303, 76824
301 ... 71430, 75185
601 ... 71430

27 CFR

5 ... 71613
13 ... 71613
19 ... 71613
170 ... 71613
173 ... 71613
186 ... 71613
194 ... 71613
195 ... 71613
196 ... 71613
197 ... 71613
200 ... 71613
201 ... 71613
211 ... 71613
212 ... 71613
213 ... 71613
231 ... 71613
240 ... 71613
250 ... 71613
251 ... 71613
252 ... 71613
Proposed Rules:
5 ... 69674, 70797, 71612
13 ... 69674, 70797, 71612
19 ... 69674, 70797, 71612
170 ... 69674, 70797, 71612
173 ... 69674, 70797, 71612
178 ... 75186
186 ... 69674, 70797, 71612
194 ... 69674, 70797, 71612
195 ... 69674, 70797, 71612
196 ... 69674, 70797, 71612
197 ... 69674, 70797, 71612
200 ... 69674, 70797, 71612
201 ... 69674, 70797, 71612
211 ... 69674, 70797, 71612
212 ... 69674, 70797, 71612
213 ... 69674, 70797, 71612
231 ... 69674, 70797, 71612
240 ... 69674, 70797, 71612
250 ... 69674, 70797, 71612
251 ... 69674, 70797, 71612
252 ... 69674, 70797, 71612

28 CFR

0 ... 69926, 77157
42 ... 77157
542 ... 76726
Proposed Rules:
42 ... 76303
544 ... 76727
546 ... 76727

29 CFR

40 ... 72587, 75628
775 ... 75628
1601 ... 75630
1952 ... 74819, 76782
1977 ... 74819
2200 ... 70106
Proposed Rules:
Ch. XXVI ... 75405
1 ... 77026
4 ... 77036
5 ... 77080
1999 ... 69675
2200 ... 70195
2550 ... 74858

30 CFR

601 ... 69927
701 ... 77440
715 ... 77447
717 ... 77447
731 ... 75143
732 ... 75302
741 ... 77440
761 ... 77440
769 ... 77440
783 ... 77454
785 ... 77454
816 ... 77447, 77454
817 ... 77447, 77454
823 ... 77454
Proposed Rules:
250 ... 70196
715 ... 77456
717 ... 77456
816 ... 77456
817 ... 77456

31 CFR

316 ... 69286, 77158
317 ... 75058
321 ... 69286
332 ... 69286, 77158
339 ... 77158
342 ... 69286
351 ... 72826
352 ... 72838
353 ... 76440
530 ... 74841
535 ... 69286, 69650, 75352, 75353, 76783
Proposed Rules:
51 ... 77356
350 ... 72187

32 CFR

1-39 ... 77158

70 ... 76486
166 ... 75631
230 ... 70460, 74819
536 ... 76784
538 ... 76784
724 ... 76486
770 ... 76279
812 ... 71825
813 ... 71827
845 ... 75633
860 ... 69286
888h ... 74819
Proposed Rules:
Ch. I ... 76303, 76305
2002 ... 71842

32A CFR
Proposed Rules:
166 ... 71845

33 CFR
3 ... 70719
82 ... 69297
117 ... 73020
147 ... 73020
157 ... 76510
161 ... 70719
175 ... 73021, 73025
183 ... 73025
204 ... 69298
207 ... 69650
Proposed Rules:
117 ... 72188
150 ... 69305
158 ... 72188, 76565
160 ... 69306
207 ... 75407

35 CFR
Ch. I ... 75306
9 ... 77160

36 CFR
223 ... 73028
1205 ... 74826

37 CFR
Proposed Rules:
201 ... 73123
202 ... 69977

38 CFR
Proposed Rule:
Ch. I ... 74858

39 CFR
111 ... 70720
601 ... 71412, 76786
Proposed Rules:
10 ... 76825
927 ... 69682

40 CFR
51 ... 72589
52 ... 69928, 70140, 70141, 71780, 72116, 72118, 72589, 73031–73033, 74830, 75635
53 ... 72589
55 ... 72593
58 ... 72589
60 ... 69298, 70465, 76786
62 ... 76281
80 ... 77161
81 ... 70143, 70466, 76787
86 ... 69416
180 ... 70143, 75638
434 ... 76788
436 ... 76793
Proposed Rules:
Ch. I ... 69978
51 ... 77199
52 ... 69683–69685, 70486, 70754, 70776, 71847, 72199, 72614, 72615, 74861, 75187, 75671, 76307, 76308, 76311, 76827
60 ... 75408
61 ... 70196
65 ... 69685, 71436
81 ... 69685, 70486
136 ... 69464, 75028
162 ... 76311
169 ... 75188
180 ... 70777
230 ... 72615
250 ... 76827
410 ... 69687
419 ... 75926
425 ... 69688
428 ... 75016
716 ... 77470
763 ... 73127

41 CFR
Ch. 44 ... 70424
60–1 ... 77000
60–2 ... 77000
60–30 ... 77000
101 ... 74832
Proposed Rules:
Ch. 51 ... 69308
24–1 ... 71438
60–1 ... 77006
60–2 ... 77006
60–20 ... 77006
60–30 ... 77006
60–50 ... 77006
60–60 ... 77006
60–250 ... 77006
60–741 ... 77006
101–20 ... 72200

42 CFR
36 ... 69933
Proposed Rules:
Ch. I ... 72728
Ch. II ... 72728
Ch. III ... 72728
Ch. IV ... 72728
31 ... 75672
32 ... 75672
35 ... 75672
85 ... 69689
85a ... 69689
122 ... 71754, 75408
123 ... 71754, 75408
455 ... 75673
460 ... 73128

43 CFR
Ch. I ... 71828
Ch. II ... 72014
4700 ... 76982
Proposed Rules:
2090 ... 69868
2300 ... 69868
2310 ... 69868
2320 ... 69868
2340 ... 69868
2350 ... 69868
Public Land Orders:
5688 ... 70467
5689 ... 73034
5690 ... 74836
5691 ... 73035

44 CFR
3 ... 75062
9 ... 76510
11 ... 73035
64 ... 71830, 71831, 72594, 72595, 76793, 77161
65 ... 71835, 75639, 76796, 76797
67 ... 70468, 72164, 75641, 76282
70 ... 75643–75645
205 ... 71790, 71793, 71794
206 ... 75576
Proposed Rules:
10 ... 70197
67 ... 70497, 70498, 70778–70791, 73130, 75675, 76322
70 ... 72178–72180
205 ... 75408

45 CFR
86 ... 71413
205 ... 75143
206 ... 75143
701 ... 75147, 76798
702 ... 75147, 76798
703 ... 75147
704 ... 75147
705 ... 75147
706 ... 75147
1010 ... 70145
1060 ... 69299
1061 ... 75645, 76524
1067 ... 77163
Proposed Rules:
Subtitle A ... 72728
Subtitle B ... 72728
3 ... 75415
87 ... 75676
121i ... 75024
174 ... 70652
175 ... 70652
176 ... 70652
1328 ... 70064

46 CFR
2 ... 73038
12 ... 70154
14 ... 70154
15 ... 70154
16 ... 70154
25 ... 73047
151 ... 69299
153 ... 69299
159 ... 73038
160 ... 73048, 73055
161 ... 73048
187 ... 72130
310 ... 69301
503 ... 70721
Proposed Rules:
4 ... 69308, 76327
26 ... 69308, 76327
33 ... 69311
35 ... 69308, 76327
42 ... 70791
78 ... 69308, 76327
93 ... 70791
94 ... 69311
97 ... 69308, 76327
109 ... 69308, 76327
167 ... 69308, 76327
185 ... 69308, 76327
192 ... 69311
196 ... 69308, 76327
508 ... 72616
510 ... 70795

47 CFR
Ch. I ... 77163
0 ... 70471, 76294, 76525, 77164
1 ... 69301
5 ... 77164
18 ... 70472
21 ... 77164
22 ... 77164
23 ... 77164
25 ... 77164
63 ... 75156
64 ... 75156
73 ... 75384, 77164
74 ... 75384, 77164
78 ... 77164
81 ... 77164
83 ... 73095
87 ... 73098, 77164
90 ... 70158, 77164
94 ... 69301, 77164
95 ... 70158, 77164
97 ... 73099, 73100, 77164
99 ... 77164
Proposed Rules:
0 ... 73130
1 ... 76565
2 ... 74862
21 ... 74862
61 ... 73130
63 ... 73130
73 ... 75418–75421, 75693
87 ... 74862
90 ... 69689, 70498, 74862, 76566
97 ... 70499

48 CFR
Proposed Rules:
Ch. I ... 76828

49 CFR
1 ... 70163
171 ... 70721
172 ... 70721, 72131
173 ... 70721
174 ... 70721, 72131
175 ... 70721
176 ... 70721
177 ... 70721
178 ... 70721
192 ... 75384
195 ... 70164
215 ... 77328
223 ... 77348
231 ... 73101
396 ... 76525
399 ... 70721
501 ... 76295
571 ... 75385
572 ... 76527
1033 ... 69302, 70475–70477, 70733, 71828–71830, 72159, 72597, 72598, 75164, 75165
1043 ... 70167, 74838

1045B.....70167, 74838
1046.....70167, 74838
1112.....75386
1121.....73105
1204.....72160
1249.....70478
1252.....70479
1300.....73132
1303.....73132
1304.....73132
1306.....73132
1307.....73132
1308.....73132
1310.....73132
1312.....73132
Proposed Rules:
192.....72201
533.....77199
571.....70204, 77210, 77224
1036.....71848
1041.....71438, 75188
1056.....75194
1060.....71849
1082.....71849
1100.....69693, 76327
1104.....76327
1125.....75188, 75190, 76328
1127.....71851

50 CFR

17.....70677, 75074, 75165
26.....72161, 74838, 77168, 77169
33.....75386, 75390, 77171, 77173
351.....76536
603.....70480
611.....76295, 76539
652.....73108
655.....77174
Proposed Rules:
Ch. I.....76299
17.....70680, 70796, 73133
32.....70210
33.....70210
611.....72204, 76566
621.....76829
651.....69312, 71440
652.....70503
657.....75684

AGENCY PUBLICATION ON ASSIGNED DAYS OF THE WEEK

The following agencies have agreed to publish all documents on two assigned days of the week (Monday/Thursday or Tuesday/Friday). This is a voluntary program. (See OFR NOTICE FR 32914, August 6, 1976.)

Monday	Tuesday	Wednesday	Thursday	Friday
DOT/SECRETARY*	USDA/ASCS		DOT/SECRETARY*	USDA/ASCS
DOT/COAST GUARD	USDA/APHIS		DOT/COAST GUARD	USDA/APHIS
DOT/FAA	USDA/FNS		DOT/FAA	USDA/FNS
DOT/FHWA	USDA/FSQS		DOT/FHWA	USDA/FSQS
DOT/FRA	USDA/REA		DOT/FRA	USDA/REA
DOT/NHTSA	MSPB/OPM		DOT/NHTSA	MSPB/OPM
DOT/RSPA	LABOR		DOT/RSPA	LABOR
DOT/SLSDC	HEW/FDA		DOT/SLSDC	HEW/FDA
DOT/UMTA			DOT/UMTA	
CSA			CSA	

Documents normally scheduled for publication on a day that will be a Federal holiday will be published the next work day following the holiday.

Comments on this program are still invited. Comments should be submitted to the Day-of-the-Week Program Coordinator. Office of the Federal Register, National Archives and Records Service, General Services Administration, Washington, D.C. 20408

REMINDERS

The items in this list were editorially compiled as an aid to **Federal Register** users. Inclusion or exclusion from this list has no legal significance. Since this list is intended as a reminder, it does not include effective dates that occur within 14 days of publication.

Rules Going Into Effect Today

CONSUMER PRODUCT SAFETY COMMISSION

70380 12-6-79 / Safety standard for walk-behind power lawn movers; certification

FEDERAL COMMUNICATIONS COMMISSION

67665 11-27-79 / FM broadcast station in East Wenatchee, Wash.; channel assigned

67666 11-27-79 / FM broadcast station in North Platte, Nebr.; channel assigned

67668 11-27-79 / FM broadcast stations in Stevens Point, Wis.; channel assigned

67664 11-27-79 / FM broadcast station in Tahoe City, Calif.; assignment of channel

67667 11-27-79 / Television broadcast station in Kalamazoo, Mich.; channel assigned

67664 11-27-79 / Television broadcast station in Oklahoma City, Okla.; channel assignment

67665 11-27-79 / Television broadcast station in High Point, N.C.; channel assigned

FEDERAL DEPOSIT INSURANCE CORPORATION

67627 11-27-79 / Securities of insured State nonmember banks; proxy statements, reports and other matters

FEDERAL RESERVE SYSTEM

67961 11-28-79 / Amendments to Regulation F, Securities of State Member Banks

67973 11-28-79 / Regulation O; reporting requirements for member banks and correspondent banks

FEDERAL TRADE COMMISSION

64402 11-7-79 / Trade regulation rules; Labeling and advertising of home insulation

HEALTH, EDUCATION, AND WELFARE DEPARTMENT

Health Care Financing Administration—

56333 10-1-79 / Medical Assistance Program; Penalty for failure to make a satisfactory showing of an effective institutional utilization control program

68466 11-29-79 / Medicare Program; beneficiary liability for certain nonreimbursable services or items

INTERIOR DEPARTMENT

Fish and Wildlife Service—

69206 11-30-79 / Virginia and Ozark big-eared bats, listing as endangered species and critical habitat determination

PANAMA CANAL COMMISSION

75306 12-19-79 / Revised rules for Panama Canal under 1977 treaty

PERSONNEL MANAGEMENT OFFICE

68799 11-30-79 / Alternative work schedules experiments

PERSONNEL MANAGEMENT OFFICE

68802 11-30-79 / Federal employees health benefits program; opportunities to register to enroll and change enrollment

SECURITIES AND EXCHANGE COMMISSION

68456 11-29-79 / Proxy rules; technical amendments

70133 12-6-79 / Rules, registration and annual report form for foreign private issuers

68764 11-29-79 / Shareholder communications and participation in corporate electoral and governance process

TRANSPORTATION DEPARTMENT

Coast Guard—

68468 11-29-79 / Documentation of vessels

Federal Aviation Administration—

68738, 68745 11-29-79 / Airworthiness and performance standards for aircraft wheels, wheel brake assemblies and tires

Federal Highway Administration—

50041 8-27-79 / Federal motor carrier safety; inspection, repair, and maintenance requirements; extension of effective date

[Originally published at 44 FR 38523, July 2, 1979]

TREASURY DEPARTMENT

Internal Revenue Service—

75137 12-19-79 / Employment taxes with respect to employees of related corporations

Rules Going Into Effect Tuesday, January 1, 1980

AGRICULTURE DEPARTMENT
Agricultural Marketing Service—
71401 12-11-79 / Papayas Grown in Hawaii; expenses and rate of assessment
Food and Nutrition Service—
72570 12-14-79 / Certification of eligible households; Food Stamp program; Thrifty food plan amounts; Guam and the Virgin Islands
64067 11-6-79 / Standard deductions and thrifty food plan updates
ENERGY DEPARTMENT
Economic Regulatory Administration—
70118 12-6-79 / Mandatory petroleum allocation and price regulations; butane and natural gasoline deregulation
66186 11-19-79 / Mandatory petroleum price regulations; phased deregulation of upper tier crude oil
60638 10-19-79 / Petroleum allocation regulations; revision for propane and other natural gas liquids
Federal Energy Regulatory Commission—
71821 12-12-79 / Electric Utility Reporting on Measures to implement conservation of natural resources
67644 11-27-79 / Regulations governing applications for license for major projects—existing dams
FEDERAL COMMUNICATIONS COMMISSION
18501 3-28-79 / Implementing a provision for the carriage of radio-telephone installations on compulsorily fitted radiotelegraph vessels and continued carriage of double sideband equipment on voluntarily fitted vessels
29072 5-18-79 / Maritime mobile service radiotelephone frequency 2182 KHz; single sideband emission A3J
66825 11-21-79 / Telephone network; connection of terminal equipment; exceptions for natural defense and security
FEDERAL DEPOSIT INSURANCE CORPORATION
43260 7-24-79 / Recordkeeping and confirmation requirements for securities transactions
FEDERAL HOME LOAN BANK BOARD
36012 6-20-79 / Branching of Federal savings and loan associations; lifting of 100-mile limitation;
36012 6-20-79 / Policy on branching
FEDERAL RESERVE SYSTEM
43256 7-24-79 / Recordkeeping and confirmation requirements for certain securities transactions effected by State member banks
FEDERAL TRADE COMMISSION
60796 12-28-78 / Proprietary and home study schools
HEALTH, EDUCATION, AND WELFARE DEPARTMENT
Health Care Financing Administration—
67381 11-26-79 / Medicare program provisions for payment for inpatient services of foreign hospitals
INTERSTATE COMMERCE COMMISSION
65987 11-16-79 / Practices of motor common carriers of passengers—Checked baggage liabililty provisions
70478 12-7-79 / Revision to quarterly report Form QFR, and elimination of filing requirement for certain carriers
OCCUPATIONAL SAFETY AND HEALTH REVIEW COMMISSION
70106 12-5-79 / Rules of procedure; final action
SECURITIES AND EXCHANGE COMMISSION
8247 1-9-79 / Uniform system of accounts for mutual and subsidiary service companies
STATE DEPARTMENT
61957 10-29-79 / Appointment of foreign service officers
TRANSPORTATION DEPARTMENT
Coast Guard—
66500 11-19-79 / Inert gas and deck foam systems
66528 11-19-79 / Tank vessels of 10,000 gross tons or more; improved steering gear requirements
66502 11-19-79 / Tank vessels of 20,000 DWT or more carrying oil in bulk; design, equipment, operating, and personnel standards
Federal Aviation Administration—
61937 10-29-79 / Identification and registration marking and aircraft registration; eligibility for aircraft registration
National Highway Transportation Safety Administration—
36448 8-17-79 / Vehicle identificatioon numbers; extension of applicability for passenger cars
Research and Special Programs Administration—
70721 12-10-79 / Shipping descriptive and hazard class designations for detonators and detonating primers
20433 4-5-79 / Tank car specifications
TREASURY DEPARTMENT
Comptroller of the Currency—
63084 11-2-79 / Fair housing home loan data system
43252 7-24-79 / Recordkeeping and confirmation requirements for certain transactions effected by national banks
Fiscal Service—
Bureau of the Public Debt—
75058 12-18-79 / U.S. Savings Bonds; regulations governing agencies for issuance
72826 12-14-79 / Offering of U.S.
72832 Savings bonds, series EE and HH

List of Public Laws

Note: No public bills which have become law were received by the Office of the Federal Register for inclusion in today's List of Public Laws.

Last Listing December 28, 1979